SPECIAL INSPECTION AND TESTING

TABLE 1 - REQUIRED GEOTECHNICAL SPECIAL INSPECTIONS

SYSTEM OR MATERIAL	INSPECTION: OSSC CODE REFERENCE	INSPECTION: CODE OR STANDARDS REFERENCE	FREQUENCY (NOTE 6): CONTINUOUS	FREQUENCY (NOTE 6): PERIODIC	REMARKS
SOILS					
VERIFY MATERIALS BELOW FOOTINGS ARE ADEQUATE TO ACHIEVE THE DESIGN BEARING CAPACITY	1705.6	GEOTECHNICAL REPORT		X	BY THE GEOTECHNICAL ENGINEER
VERIFY EXCAVATIONS ARE EXTENDED TO PROPER DEPTH AND HAVE REACHED PROPER MATERIAL				X	
PERFORM CLASSIFICATION AND TESTING OF CONTROLLED FILL MATERIALS				X	
VERIFY USE OF PROPER MATERIALS, DENSITIES AND LIFT THICKNESSES DURING PLACEMENT AND COMPACTION OF CONTROLLED FILL			X		
PRIOR TO PLACEMENT OF CONTROLLED FILL, OBSERVE SUBGRADE AND VERIFY THAT SITE HAS BEEN PREPARED PROPERLY				X	

TABLE 2 - REQUIRED STRUCTURAL SPECIAL INSPECTIONS

SYSTEM OR MATERIAL	INSPECTION: OSSC CODE REFERENCE	INSPECTION: CODE OR STANDARD REFERENCE	FREQUENCY (NOTE 6): CONTINUOUS	FREQUENCY (NOTE 6): PERIODIC	REMARKS
FABRICATORS					
FABRICATORS	1704.2.5			X	SPECIAL INSPECTION IS REQUIRED FOR STRUCTURAL LOAD-BEARING MEMBERS AND ASSEMBLIES FABRICATED ON THE PREMISES OF A FABRICATOR'S SHOP PER TABLE 2 AND AS REQUIRED ELSEWHERE IN THE SPECIAL INSPECTION PROGRAM. THE SPECIAL INSPECTOR SHALL VERIFY THAT THE FABRICATOR MAINTAINS DETAILED FABRICATION AND QUALITY CONTROL PROCEDURES AND SHALL REVIEW FOR COMPLETENESS AND ADEQUACY RELATIVE TO THE CODE REQUIREMENT. REFERENCE SECTION 1704.2.5.2 FOR APPROVED FABRICATOR EXCEPTION.
DEFERRED SUBMITTALS					
DEFERRED SUBMITTALS			X	X	SPECIAL INSPECTION REQUIREMENTS FOR DEFERRED SUBMITTAL ITEMS TO BE SPECIFIED BY THE SYSTEMS ENGINEER AND INCLUDED WITH DEFERRED SUBMITTAL DOCUMENTS.
CONCRETE					
GENERAL	1705.3 1901.4	ACI 318 1.3			SPECIAL INSPECTIONS OF CONCRETE SHALL CONFORM TO THE REQUIREMENTS OF SECTION 1705.3 OF THE OSSC AND SECTION 1.3 OF ACI 318.
REINFORCING STEEL	1910.4 1901.3.2	ACI 318 3.5 ACI 318 7.1 TO 7.7		X	REINFORCING TO COMPLY WITH ALL CODE PROTECTION, SPACING AND TOLERANCE LIMITS.
WELDING REINFORCING STEEL	1705.2.2 1903.1	AWS D1.4 ACI 318: 3.5.2			
1. VERIFICATION OF WELDABILITY OF REINFORCING STEEL OTHER THAN ASTM A 706				X	
2. REINFORCING STEEL RESISTING FLEXURAL AND AXIAL FORCES IN INTERMEDIATE AND SPECIAL MOMENT FRAMES, AND BOUNDARY ELEMENTS OF SPECIAL STRUCTURAL WALLS OF CONCRETE AND SHEAR REINFORCMENT			X		
3. SHEAR REINFORCEMENT			X		
4. OTHER REINFORCING STEEL				X	
PLACEMENT OF CAST-IN-PLACE BOLTS	1908.5 1909.1		X		ALL BOLTS VISUALLY INSPECTED
VERIFYING USE OF REQUIRED MIX DESIGN(S)	1904.2 1910.2 1910.3	ACI 318, CH. 4 ACI 318 5.2-5.4		X	
CONCRETE PLACEMENT, NON-SHRINK GROUT		ACI 318 5.9-5.10	X		
SHOTCRETE PLACEMENT	1910.6-8		X		
CONCRETE PLACEMENT AT COMPOSITE SLABS		ASCE 9, CH. 3	X		
CONCRETE/SHOTCRETE CURING	1910.9	ACI 318 5.11-5.13		X	
VERIFICATION OF FORMWORK		ACI 318 6.1.1		X	SPECIAL INSPECTIONS APPLY TO SHAPE, LOCATION AND DIMENSIONS OF THE CONCRETE MEMBER BEING FORMED
EMBEDDED ITEMS IN CONCRETE				X	ALL NON-STRUCTRAL EMBEDDED ITEMS, SUCH AS CONDUITS, PIPES AND SLEEVES, SHALL BE REVIEWED FOR CONFORMANCE WITH STRUCTURAL DOCUMENTS FOR SIZE, SPACING, LOCATION, EDGE DISTANCE AND TRIM REINFORING.
REINFORCING STEEL MECHANICAL COUPLERS, TERMINATORS AND FORMSAVERS		ICC EVALUATION REPORTS		X	
STEEL					
REFERENCE TABLE 2A FOR REQUIRED SPECIAL INSPECTIONS FOR STEEL					
COLD-FORMED STEEL FRAMING					
MATERIAL VERIFICATION OF WELD FILLER METALS		AWS D1.3 SECTION 7		X	MANUFACTURER'S CERTIFIED TEST REPORTS
VERIFYING USE OF PROPER WPS'S				X	RETAIN A RECORD OF WELDING PROCEDURE SPECIFICATIONS
VERIFYING WELDER QUALIFICATIONS	1705.2.2.1			X	RETAIN A RECORD OF QUALIFICATION CARDS
COLD FORMED ROOF AND FLOOR DECKS	1705.2.2.1.1	AWS D1.3		X	WELDING INSPECTION AND INSPECTOR QUALIFICATION
WELDED FRAMING CONNECTIONS	1705.2.2.1	AWS D1.3 SECTION 7		X	ALL WELDS VISUALLY INSPECTED PER AWS D1.3 7.1

TABLE 2 - REQUIRED STRUCTURAL SPECIAL INSPECTIONS

SYSTEM OR MATERIAL	INSPECTION: OSSC CODE REFERENCE	INSPECTION: CODE OR STANDARD REFERENCE	FREQUENCY (NOTE 6): CONTINUOUS	FREQUENCY (NOTE 6): PERIODIC	REMARKS
POST INSTALLED CONCRETE ANCHORS					
POST INSTALLED ANCHORS INSTALLATION IN HARDENED CONCRETE AND COMPLETED MASONRY	1908.5 1909.1	ACI 318: 1.3, 3.8.6		X (NOTE 8)	INSPECTION REQUIREMENTS PER ICC EVALUATION REPORT

TABLE 2A - REQUIRED STRUCTURAL STEEL SPECIAL INSPECTIONS

SYSTEM OR MATERIAL	INSPECTION: OSSC CODE REFERENCE	INSPECTION: CODE OR STANDARD REFERENCE	INSPECTION (NOTES 5 AND 6): CONTINUOUS	INSPECTION (NOTES 5 AND 6): PERIODIC	INSPECTION (NOTES 5 AND 6): OBSERVE	INSPECTION (NOTES 5 AND 6): PERFORM	REMARKS
STEEL							
CONTRACTOR QUALITY CONTROL REQUIREMENTS		AISC 360 CHAPTER N			X	X	CONTRACTOR TO PROVIDE QUALITY CONTROL FOR ALL ITEMS INDICATED TO BE OBSERVE AND/OR PERFORM IN TABLE BELOW
STEEL FABRICATION							
FABRICATION OF STRUCTURAL ELEMENTS	1704.2.5.2	AISC 360 N2		X			REFER TO INSPECTION OF FABRICATOR REQUIREMENTS
MATERIAL VERIFICATION OF STRUCTURAL STEEL	1705.2.1 2203.1 TABLE 1705.2	ASTM A6 ASTM STANDARDS SPECIFIED IN CONSTRUCTION DOCUMENTS AISC 360 A3.1 AISC 360 N3.2		X			CERTIFIED MILL TEST REPORTS
FOR OTHER STEEL, IDENTIFICATION MARKINGS TO CONFORM TO ASTM STANDARDS SPECIFIED IN THE APPROVED CONSTRUCTION DOCUMENTS	TABLE 1705.2	APPLICABLE ASTM STANDARDS		X			MANUFACTURER'S CERTIFIED TEST REPORTS
MATERIAL VERIFICATION OF HIGH STRENGTH BOLTS, NUTS, AND WASHERS		AISC 360 A3.3 AISC 360 N3.2 ASTM STANDARDS SPECIFIED IN CONSTRUCTION DOCUMENTS RCSC 2.1		X			MANUFACTURER'S CERTIFIED TEST REPORTS
MATERIAL VERIFICATION OF ANCHOR BOLTS AND THREADED RODS		AISC 360 A3.4 AISC 360 N3.2 ASTM STANDARDS SPECIFIED IN CONSTRUCTION DOCUMENTS		X			MANUFACTURER'S CERTIFIED TEST REPORTS
MATERIAL VERIFICATION OF WELD FILLER METALS	TABLE 1705.2	AISC 360 A3.5 AISC 360 N3.2 APPLICABLE AWS A5 DOCUMENTS		X			MANUFACTURER'S CERTIFIED TEST REPORTS
STRUCTURAL STEEL WELDING							
VERIFYING USE OF PROPER WPS'S		AISC 360 N3.2					RETAIN A RECORD OF WELDING PROCEDURE SPECIFICATIONS
VERIFYING WELDER QUALIFICATIONS	1705.2.2.1			X			RETAIN A RECORD OF QUALIFICATION CARDS
COMPLETE AND PARTIAL JOINT PENETRATION GROOVE WELDS	TABLE 1705.2	AWS D1.1 SECTION 6	X				
MULTIPASS FILLET WELDS			X				
SINGLE PASS FILLET WELDS GREATER THAN 5/16"			X				ALL WELDS VISUALLY INSPECTED PER AWS D1.16.9
PLUG AND SLOT WELDS			X				
SINGLE PASS FILLET WELDS LESS THAN OR EQUAL TO 5/16"				X			
WELDING STAIR AND RAILING SYSTEMS	1705.2(2.5)	AWS D1.1 SECTION 6		X			ALL WELDS VISUALLY INSPECTED PER AWS D1.1 6.9
VERIFICATION OF FRAME JOINT DETAILS INCLUDING MEMBER AND COMPONENT LOCATIONS, BRACING, AND STIFFENERS	TABLE 1705.2	AISC 360 N5.7		X			
REINFORCING STEEL WELDING							SEE CONCRETET SECTION
STEEL ELEMENTS OF COMPOSITE CONSTRUCTION							
INSTALLATION OF COMPOSITE SLAB DECKING	1705.1.1	ICC EVALUATION REPORT ASCE 9 CHAPTER 3		X			SPECIAL INSPECTIONS APPLY TO DECKING TYPE, DEPTH, GAUGE, AND FASTENING
INSTALLATION OF ROOF DECKING	1705.1.1	ICC EVALUATION REPORT		X			SPECIAL INSPECTIONS APPLY TO DECKING TYPE, DEPTH AND GAUGE, POWER ACTUATED FASTENERS, SCREWS, PROPRIETARY SIDE SEAM ATTACHMENTS, AND BUTTON PUNCHES AND SHEAR CONNECTORS
FLOOR AND ROOF DECK WELDS	TABLE 1705.2	AWS D1.3 SECTION 7		X			ALL WELDS INSPECTED PER AWS D1.3 7.1
WELDING STUDS IN STRUCTURAL DIAPHRAGMS	1705.2 (2.3 and 3)	AISC 360 N6 AWS D1.1 SECTION 7		X			CONTINUOUS INSPECTION IS NOT REQUIRED WHEN WELDS INSTALLED WITH AN AUTOMATICALLY TIMED STUD WELDING MACHINE PER SECTION 7 OF AWS D1.1(ONLY PERIODIC), 1705.2(3) ALL WELDS VISUALLY INSPECTED PER AWS D1.1 7.8.1
PLACEMENT AND INSTALLATION OF STEEL DECK	1705.2	AISC 360 TABLE N6.1				X	
PLACEMENT AND INSTALLATION OF STEEL HEADED STUD ANCHOS						X	
DOCUMENT ACCEPTANCE OR REJECTION OF STEEL ELEMENTS						X	

BID/PERMIT SET

kpff

REGISTERED PROFESSIONAL ENGINEER
15773
OREGON
JULY 21, 1995
GERALD L ABDIE

EXPIRES 12-31-19

SPECIAL INSPECTION AND TESTING
ACMA
BEAVERTON SCHOOL DISTRICT

S0.4
74-18109-00
03/14/2019
REVISIONS

DLR Group
Architecture Engineering Planning Interiors

© DLR Group Architecture & Engineering Inc., an Oregon corporation, ALL RIGHTS RESERVED

C:\Users\brad\Documents\10021800772_bradfrench3417.rvt
3/13/2019 2:51:27 PM

SPECIAL INSPECTION AND TESTING

TABLE 2A CONT. - REQUIRED STRUCTURAL STEEL SPECIAL INSPECTIONS

SYSTEM OR MATERIAL	INSPECTION: OSSC CODE REFERENCE	INSPECTION: CODE OR STANDARD REFERENCE	INSPECTION (NOTES 5 AND 6): CONTINUOUS	PERIODIC	OBSERVE	PERFORM	REMARKS
STEEL CONT.							
HIGH-STRENGTH BOLTING							
SNUG-TIGHT HIGH STRENGTH BOLT INSTALLATION	1705.2.1	RCSC SPECIFICATION FOR STRUCTURAL JOINTS USING ASTM A325 OR A490 BOLTS SECTION 9 AISC 360 SECTION M2.5		X			ALL CONNECTIONS VISUALLY INSPECTED AND VERIFIED SNUG
PRETENSIONED HIGH STRENGTH BOLT INSTALLATION USING TURN-OF-THE-NUT METHOD WITH MATCH MARKING, DIRECT TENSION INDICATOR METHOD, OR TWIST-OFF TYPE TENSION CONTROL BOLT METHOD	1705.2.1			X			ALL CONNECTIONS VISUALLY INSPECTED. CONNECTIONS USING DIRECT TENSION INDICATORS, ALL BOLTS SHALL BE INSPECTED AFTER SNUGGING AND AFTER PRETENSIONING
PRETENSIONED HIGH STRENGTH BOLT INSTALLATION USING TURN-OF-THE-NUT METHOD WITHOUT MATCH MARKING OR CALIBRATED WRENCH METHOD	1705.2.1		X				ALL CONNECTIONS VISUALLY INSPECTED
INSPECTION TASKS PRIOR TO BOLTING	1705.2	AISC 360 TABLE N5.6-1					
MANUFACTURER"S CERTIFICATIONS AVAILABLE FOR FASTENER MATERIALS						X	
FASTENERS MARKED IN ACCORDANCE WITH ASTM REQUIREMENTS					X		
PROPER FASTENERS SELECTED FOR THE JOINT DETAIL (GRADE, TYPE, BOLT LENGTH, IF THREADS ARE TO BE EXCLUDED FROM THE SHEAR PLANE)					X		
PROPER BOLTING PROCEDURE SELECTED FOR JOINT DETAIL					X		
CONNECTING ELEMENTS< INCLUDING THE APPROPRIATE FAYING SURFACE CONDITION AND HOLE PREPARATION, F SPECIFIED, MEET APPLICABLE REQUIREMENTS					X		
PRE-INSTALLATION VERIFICATION TESTING BY INSTALLATION PERSONNEL OBSERVED AND DOCUMENTED FOR FASTENER ASSEMBLIES AND METHODS USED					X		
PROPER STORAGE PROVIDED FOR BOLTS, NUTS, WASHERS AND OTHER FASTENER COMPONENTS					X		
INSPECTION TASKS DURING BOLTING	1705.2	AISC 360 TABLE N5.6-2 RCSC SPECIFICATION FOR STRUCTURAL JOINTS USING ASTM A325 OR A490 BOLTS SECTION 9					
FASTENER ASSEMBLIES, OF SUITABLE CONDITION, PLACED IN ALL HOLES AND WASHERS (IF REQUIRED) ARE POSITIONED AS REQUIRED					X		
JOINT BROUGHT TO THE SNUG-TIGHT CONDITION PRIOR TO THE PRETENSIONING OPERATION					X		
FASTENER COMPONENT NOT TURNED BY THE WRENCH PREVENTED FROM ROTATING					X		
FASTENERS ARE PRETENSIONED IN ACCORDANCE WITH THE RCSC SPECIFICATION, PROGRESSING SYSTEMATICALLY FROM THE MOST RIGID POINT TOWARD THE FREE EDGES					X		
INSPECTION TASKS AFTER BOLTING	1705.2	AISC 360 TABLE N5.6-3					
DOCUMENT ACCEPTANCE OR REJECTION OF BOLTED CONNECTIONS						X	

TABLE 4 - REQUIRED SPECIAL INSPECTIONS FOR SEISMIC RESISTANCE

SYSTEM OR MATERIAL	INSPECTION: OSSC CODE REFERENCE	INSPECTION: CODE OR STANDARD REFERENCE	FREQUENCY (NOTE 6): CONTINUOUS	PERIODIC	REMARKS
GENERAL					
DESIGNATED SEISMIC LOAD-RESISTING SYSTEMS (SLRS)	1704.3.2 1705.11				REFERENCE GENERAL STRUCTURAL NOTES FOR OUTLINE OF (SLRS) SYSTEM. REFERENCE TABLE 4 FOR MATERIAL SPECIFIC INSPECTIONS REQUIREMENTS
DESIGNATED SEISMIC SYSTEMS (SECONDARY)					REFERENCE TABLE N1 AND N2 FOR INSPECTION REQUIREMENTS
STEEL					
REFERENCE TABLE 4A FOR REQUIRED SPECIAL INSPECTIONS FOR SEISMIC RESISTANCE OF STRUCTURAL STEEL					

TABLE 4A - REQUIRED SPECIAL INSPECTIONS AND QUALITY CONTROL FOR SEISMIC RESISTANCE OF STRUCTURAL STEEL

SYSTEM OR MATERIAL	INSPECTION: OSSC CODE REFERENCE	INSPECTION: CODE OR STANDARD REFERENCE	QA/QC TASKS (NOTES 5,6,10): OBSERVE	PERFORM	REMARKS
VISUAL INSPECTION TASKS PRIOR TO WELDING					
MATERIAL IDENTIFICATION (TYPE/GRADE)	1705.11.1	AISC 341 TABLE J6-1 AWS D1.8/D1.8M	X		
WELDER IDENTIFICATION SYSTEM			X		
FIT-UP OF GROOVE WELDS (INCLUDING JOINT GEOMETRY)					
JOINT PREPARATION			X (QA)	X (QC)	
DIMENSIONS (ALIGNMENT, ROOT OPENING, ROOT FACE, BEVEL)			X (QA)	X (QC)	
CLEANLINESS (CONDITION OF STEEL SURFACES)			X (QA)	X (QC)	NOTE 7
TACKING (TACK WELD QUALITY AND LOCATION)			X (QA)	X (QC)	
BACKING TYPE AND FIT (IF APPLICABLE)			X (QA)	X (QC)	
CONFIGURATION AND FINISH OF ACCESS HOLES			X		
FIT-UP OF FILLET WELDS					
DIMENSIONS (ALIGNMENT, GAPS AT ROOT)			X (QA)	X (QC)	
CLEANINESS(CONDITION OF STEEL SURFACES)			X (QA)	X (QC)	NOTE 7
TACKING (TACK WELD QUALITY AND LOCATION)			X (QA)	X (QC)	
VISUAL INSPECTION TASKS DURING WELDING					
WPS FOLLOWED	1705.11.1	AISC 341 TABLE J6-2 AWS D1.8/D1.8M			
SETTINGS ON WELDING EQUIPMENT			X		
TRAVEL SPEED			X		
SELECTED WELDING MATERIALS			X		
SHIELDING GAS TYPE/FLOW RATE			X		
PREHEAT APPLIED			X		
INTERPASS TEMPERATURE MAINTAINED (MIN/MAX.)			X		
PROPER POSITION (F, V, H, OH)			X		
INTERMIX OF FILLER METALS AVOIDED UNLESS APPROVED			X		
USE OF QUALIFIED WELDERS			X		
CONTROL AND HANDLING OF WELDING CONSUMABLES					
PACKAGING			X		
EXPOSURE CONTROL			X		
ENVIRONMENTAL CONDITIONS					
WIND SPEED WITHIN LIMITS			X		
PRECIPITATION AND TEMPERATURE			X		
WELDING TECHNIQUES					
INTERPASS AND FINAL CLEANING			X		
EACH PASS WITHIN PROFILE LIMITATIONS			X		
EACH PASS MEETS QUALITY REQUIREMENTS			X		
NO WELDING OVER CRACKED TACKS			X		
WELDS CLEANED			X		
VISUAL INSPECTION TASKS AFTER WELDING					
SIZE, LENGTH, AND LOCATION OF WELDS	1705.11.1	AISC 341 TABLE J6-3 AWS D1.8/D1.8M		X(D)	THE INSPECTOR SHALL PREPARE REPORTS INDICATING THAT THE WORK HAS BEEN PERFORMED IN ACCORDANCE WITH THE CONTRACT DOCUMENTS.
WELDS MEET VISUAL ACCEPTANCE CRITERIA					
CRACK PROHIBITION				X(D)	
WELD/BASE-METAL FUSION				X(D)	
CRATER CROSS SECTION				X(D)	
WELD PROFILE AND SIZE				X(D)	
UNDERCUT				X(D)	
POROSITY				X(D)	
PLACEMENT OF REINFORCING OR CONTOURING FILLET WELDS (IF REQUIRED)				X(D)	
BACKING REMOVED, WELD TABS REMOVED AND FINISHED, AND FILLET WELDS ADDED (IF REQUIRED)				X(D)	
REPAIR ACTIVITIES				X(D)	
INSPECTION TASKS PRIOR TO BOLTING					
PROPER FASTENERS SELECTED FOR THE JOINT DETAIL	1705.11.1	AISC 341 TABLE J7-1 RCSC SPECIFICATION FOR STRUCTURAL JOINTS USING HIGH-STRENGTH BOLTS	X		
PROPER BOLTING PROCEDURE SELECTED FOR JOINT DETAIL			X		
CONNECTING ELEMENTS, INCLUDING THE APPROPRIATE FAYING SURFACE CONDITION AND HOLE PREPARATION, IF SPECIFIED, MEET APPLICABLE REQUIREMENTS			X		
PRE-INSTALLATION VERIFICATION TESTING BY INSTALLATION PERSONNEL OBSERVED FOR FASTENER ASSEMBLIES AND METHODS USED			X (QA)	X (QC)(D)	THE INSPECTOR SHALL PREPARE REPORTS INDICATING THAT THE WORK HAS BEEN PERFORMED IN ACCORDANCE WITH THE CONTRACT DOCUMENTS.
PROPER STORAGE PROVIDED FOR BOLTS, NUTS, WASHERS AND OTHER FASTENER COMPONENTS			X		
INSPECTION TASKS DURING BOLTING					
FASTENER ASSEMBLIES PLACED IN ALL HOLES AND WASHERS (IF REQUIRED) ARE POSITIONED AS REQUIRED	1705.11.1	AISC 341 TABLE J7-2 RCSC SPECIFICATION FOR STRUCTURAL JOINTS USING HIGH-STRENGTH BOLTS	X		
JOINT BROUGHT TO THE SNUG TIGHT CONDITION PRIOR TO THE PRETENSIONING OPERATION			X		
FASTENER COMPONENT NOT TURNED BY THE WRENCH PREVENTED FROM ROTATING			X		
BOLTS ARE PRETENSIONED PROGRESSING SYSTEMATICALLY FROM THE MOST RIGID POINT TOWARD THE FREE EDGES			X		
INSPECTION TASKS AFTER BOLTING					
DOCUMENT ACCEPTED AND REJECTED CONNECTION	1705.11.1	AISC 341 TABLE J7-3		X(D)	THE INSPECTOR SHALL PREPARE REPORTS INDICATING THAT THE WORK HAS BEEN PERFORMED IN ACCORDANCE WITH THE CONTRACT DOCUMENTS.
OTHER INSPECTION TASKS					
RBS REQUIREMENTS, IF APPLICABLE	1705.11.1	AISC 341 TABLE J8-1 AISC 358 5.7			THE INSPECTOR SHALL PREPARE REPORTS INDICATING THAT THE WORK HAS BEEN PERFORMED IN ACCORDANCE WITH THE CONTRACT DOCUMENTS.
CONTOUR AND FINISH				X(D)	
DIMENSIONAL TOLERANCES				X(D)	
PROTECTED ZONE - NO HOLES AND UNAPPROVED ATTACHMENTS MADE BY FABRICATOR OR ERECTOR, AS APPLICABLE		AISC 341 TABLE J8-1 AISC 341 D1.3 AISC 341 I2.1		X(D)	THE INSPECTOR SHALL PREPARE REPORTS INDICATING THAT THE WORK HAS BEEN PERFORMED IN ACCORDANCE WITH THE CONTRACT DOCUMENTS.

BID/PERMIT SET

kpff

REGISTERED PROFESSIONAL ENGINEER 15773 OREGON JAN. 21, 1983 JERALD L. ABBE

EXPIRES 12-31-19

SPECIAL INSPECTION AND TESTING
ACMA
BEAVERTON SCHOOL DISTRICT

S0.5
74-18109-00
03/14/2019
REVISIONS

DLR Group
Architecture Engineering Planning Interiors

© DLR Group Architecture & Engineering Inc., an Oregon corporation, ALL RIGHTS RESERVED

C:\Users\brad\Documents\10021800772_bradfrench3417.rvt
3/13/2019 2:51:28 PM

SPECIAL INSPECTION AND TESTING

TABLE 4A CONT. - REQUIRED SPECIAL INSPECTIONS AND QUALITY CONTROL FOR SEISMIC RESISTANCE OF STRUCTURAL STEEL					
SYSTEM OR MATERIAL	INSPECTION				REMARKS
	OSSC CODE REFERENCE	CODE OR STANDARD REFERENCE	QA/QC TASKS (NOTES 5,6,10) OBSERVE	QA/QC TASKS (NOTES 5,6,10) PERFORM	
INSPECTION OF COMPOSITE STRUCTURES PRIOR TO CONCRETE PLACEMENT					
MATERIAL IDENTIFICATION OF REINFORCING STEEL (TYPE/GRADE)	1705.11.1	AISC 341 TABLE J9-1	X		REFER TO TABLE 2 STRUCTURAL SPECIAL INSPECTION
DETERMINATION OF CARBON EQUIVALENT FOR REINFORCING STEEL OTHER THAN ASTM A706			X		
PROPER REINFORCING STEEL SIZE, SPACING AND ORIENTATION			X		
REINFORCING STEEL HAS NOT BEEN REBENT IN THE FIELD			X		
REINFORCING STEEL HAS BEEN TIED AND SUPPORTED AS REQUIRED			X		
REQUIRED REINFORCING STEEL CLEARANCES HAVE BEEN PROVIDED			X		
COMPOSITE MEMBER HAS REQUIRED SIZE			X		
INSPECTION OF COMPOSITE STRUCTURES DURING CONCRETE PLACEMENT					
CONCRETE: MATERIAL IDENTIFICATION (MIX DESIGN, COMPRESSIVE STRENGTH, MAXIMUM LARGE AGGREGATE SIZE, MAXIMUM SLUMP)	1705.11.1	AISC 341 TABLE J9-2 ASTM C39, ASTM C143	X		THE INSPECTOR SHALL PREPARE REPORTS INDICATING THAT THE WORK HAS BEEN PERFORMED IN ACCORDANCE WITH THE CONTRACT DOCUMENTS.
LIMITS ON WATER ADDED AT THE TRUCK OR PUMP			X		THE INSPECTOR SHALL PREPARE REPORTS INDICATING THAT THE WORK HAS BEEN PERFORMED IN ACCORDANCE WITH THE CONTRACT DOCUMENTS.
PROPER PLACEMENT TECHNIQUES TO LIMIT SEGREGATION			X		
INSPECTION OF COMPOSITE STRUCTURES AFTER CONCRETE PLACEMENT					
ACHIEVEMENT OF MINIMUM SPECIFIED CONCRETE COMPRESSIVE STRENGTH AT SPECIFIED AGE	1705.11.1	AISC 341 TABLE J9-3 ASTM C39		D	THE INSPECTOR SHALL PREPARE REPORTS INDICATING THAT THE WORK HAS BEEN PERFORMED IN ACCORDANCE WITH THE CONTRACT DOCUMENTS.
INSPECTION OF COMPOSITE STRUCTURES PRIOR TO CONCRETE PLACEMENT					
MATERIAL IDENTIFICATION OF REINFORCING STEEL (TYPE/GRADE)	1705.11.1	AISC 341 TABLE J9-1	X		REFER TO TABLE 2 STRUCTURAL SPECIAL INSPECTION
DETERMINATION OF CARBON EQUIVALENT FOR REINFORCING STEEL OTHER THAN ASTM A706			X		
PROPER REINFORCING STEEL SIZE, SPACING AND ORIENTATION			X		
REINFORCING STEEL HAS NOT BEEN REBENT IN THE FIELD			X		
REINFORCING STEEL HAS BEEN TIED AND SUPPORTED AS REQUIRED			X		
REQUIRED REINFORCING STEEL CLEARANCES HAVE BEEN PROVIDED			X		
COMPOSITE MEMBER HAS REQUIRED SIZE			X		
INSPECTION OF COMPOSITE STRUCTURES DURING CONCRETE PLACEMENT					
CONCRETE: MATERIAL IDENTIFICATION (MIX DESIGN, COMPRESSIVE STRENGTH, MAXIMUM LARGE AGGREGATE SIZE, MAXIMUM SLUMP)	1705.11.1	AISC 341 TABLE J9-2 ASTM C39, ASTM C143	X		THE INSPECTOR SHALL PREPARE REPORTS INDICATING THAT THE WORK HAS BEEN PERFORMED IN ACCORDANCE WITH THE CONTRACT DOCUMENTS.
LIMITS ON WATER ADDED AT THE TRUCK OR PUMP			X		THE INSPECTOR SHALL PREPARE REPORTS INDICATING THAT THE WORK HAS BEEN PERFORMED IN ACCORDANCE WITH THE CONTRACT DOCUMENTS.
PROPER PLACEMENT TECHNIQUES TO LIMIT SEGREGATION			X		
INSPECTION OF COMPOSITE STRUCTURES AFTER CONCRETE PLACEMENT					
ACHIEVEMENT OF MINIMUM SPECIFIED CONCRETE COMPRESSIVE STRENGTH AT SPECIFIED AGE	1705.11.1	AISC 341 TABLE J9-3 ASTM C39		D	THE INSPECTOR SHALL PREPARE REPORTS INDICATING THAT THE WORK HAS BEEN PERFORMED IN ACCORDANCE WITH THE CONTRACT DOCUMENTS.

TESTING

TABLE 6 - REQUIRED TESTING FOR SPECIAL INSPECTIONS					
SYSTEM OR MATERIAL	INSPECTION				REMARKS
	OSSC CODE REFERENCE	CODE OR STANDARD REFERENCE	FREQUENCY (NOTE 6) CONTINUOUS	FREQUENCY (NOTE 6) PERIODIC	
GEOTECHNICAL					
FILL IN-PLACE DENSITY OR PREPARED SUBGRADE DENSITY	1705.6	VARIES; GEOTECHNICAL REPORT OR MINIMUM PER IBC APPENDIX J107.5, WHICHEVER IS GREATER		X	BY THE GEOTECHNICAL ENGINEER
MATERIAL VERIFICATION		VARIES; CLASSIFICATION AND TESTING OF CONTROLLED FILL MATERIALS		X	BY THE GEOTECHNICAL ENGINEER
CONCRETE					
CONCRETE STRENGTH	1705.3 ASTM C172 ASTM C 31 ACI318:5.6,5.8	ASTM C39	EACH 150 CY NOR LESS THAN EACH 5000 SF OF SLAB OR WALL PLACED EACH SHIFT		FABRICATE SPECIMENS AT TIME FRESH CONCRETET IS PLACED
CONCRETE SLUMP		ASTM C143			
CONCRETE AIR CONTENT		ASTM C231			
CONCRETE TEMPERATURE		ASTM C1064			
SHOTCRETE STRENGTH	1910.5 1910.10	ASTM C39	EACH 50 CY NOR LESS THAN EACH 5000 SF OF WALL PLACED EACH SHIFT		SPECIMEN TAKEN FROM THE IN-PLACE OR FROM TEST PANELS
STEEL					
ULTRASONIC (UT) TESTING OF WELDS	1705.2.2	AWS D1.1 6.13 & 6.14.3			ALL C.J.P. WELDS 5/16" AND THICKER REQUIRE UT TESTING.
MAGNETIC PARTICLE (MT) TESTING OF WELDS	1705.2.2	AWS D1.1 6.14.4 AISC360 N5.5c			REQUIRED AT THERMALLY CUT ACCESS HOLES WHERE FLANGE THICKNESS EXCEEDS 2" FOR ROLLED SHAPES OR WHEN THE WEB THICKNESS EXCEEDS 2" FOR BUILT-UP SHAPES. REQUIRED WHERE SPECIFICALLY NOTED ON DRAWINGS OR AS DIRECTED BY KPFF AT WELDS IDENTIFIED TO BE IN QUESTION BASED ON INSPECTIONS
PRE-CONSTRUCTION TESTING OF WELDING STUDS	1705.2.2	AWS D1.1 7.7.1	EACH SIZE AND TYPE OF STUD EACH SHIFT		THIS TESTING PERFORMED BY CONTRACTOR AND CONFIRMED BY SPECIAL INSPECTOR
STUD APPLICATION QUALIFICATION	1705.2.2	AWS D1.1 7.6	NON-PREQUALIFIED APPLICATIONS		THIS TESTING PERFORMED BY CONTRACTOR AND CONFIRMED BY SPECIAL INSPECTOR
PRE-INSTALLATION VERIFICATION OF PRETENSIONED HIGH STRENGTH BOLTS	1705.2.2	RCSC SPECIFICATION FOR STRUCTURAL JOINTS USING ASTM A325 OR A490 BOLTS SECTION 7	EACH COMBINATION OF DIAMETER, LENGTH, GRADE, AND LOT TO BE USED IN THE WORK		

TABLE 7 - REQUIRED TESTING FOR SEISMIC RESISTANCE SPECIAL INSPECTIONS				
SYSTEM OR MATERIAL	INSPECTION			REMARKS
	OSSC CODE REFERENCE	CODE OR STANDARD REFERENCE	FREQUENCY	
CONCRETE REINFORCEMENT				
TEST A615 REINFORCEMENT FOR WELDABILITY WHEN SUCH REINFORCEMENT IS TO BE WELDED	1705.12.1	ACI 318: 3.5.2		
STEEL				
REFERENCE TABLE 7A FOR REQUIRED TESTING FOR SEISMIC RESISTANCE SPECIAL INSPECTIONS OF STRUCTURAL STEEL				

BID/PERMIT SET

kpff

REGISTERED PROFESSIONAL ENGINEER
15773
OREGON
JAN. 21, 1983
GERALD L. ABBITT
EXPIRES: 12-31-19

SPECIAL INSPECTION AND TESTING
ACMA
BEAVERTON SCHOOL DISTRICT

S0.6
74-18109-00
03/14/2019
REVISIONS

DLR Group
Architecture Engineering Planning Interiors

© DLR Group Architecture & Engineering Inc., an Oregon corporation, ALL RIGHTS RESERVED

C:\Users\bradf\Documents\10021800772_bradfrench3417.rvt
3/13/2019 2:51:29 PM

SPECIAL INSPECTION AND TESTING

TABLE 7A - REQUIRED TESTING FOR SEISMIC RESISTANCE SPECIAL INSPECTIONS OF STRUCTURAL STEEL

SYSTEM OR MATERIAL	INSPECTION			REMARKS
	OSSC CODE REFERENCE	CODE OR STANDARD REFERENCE	DESCRIPTION/FREQUENCY	
2a) k-AREA NDT AT WELDING OF DOUBLER PLATES, COINTINUTITY PLATES OR STIFFENERS	1705.12.2	AISC 341 SECTION J6	WEB SHALL BE TESTED FOR CRACKS USING MT INCLUDING BASE METTAL WITHIN 3 IN OF WELD.	MT SHALL BE PERFORMED NO SOONER THAN 48 HOURS AFTER COMPLETION OF WELDING
2b) CJP GROOVE WELD NDT			UT SHALL BE PERFORMED ON 5/16" THICKNESS AND GREATER. MT SHALL BE PEROFMED ON 25% OF ALL BEAM-TO-COLUMN CJP GROOVE WELDS.	WELD DISCONTINUITIES SHALL BE ACCEPTED OR REJECTED ON THE BASIS OF CRITERIA OF AWS D1.1/D1.1M TABLE 6.2. UT TESTING NOT REQUIRED ON THICKNESS LESS THAN 5/16"
2c) BASE METAL NDT FOR LAMELLAR TEARING AND LAMINATIONS			FOR BASE METAL THICKNESS (t) OF 1 1/2" AND GREATER AND CONNECTED MATERIAL THICKNESS OF 3/4" AND GREATER, UT FOR DISCONTINUITIES BEHIND AND ADJACENT TO THE FUSION LINE.	ANY BASE METAL DISCONTINUITIES FOUND WITHIN t/4 OF THE STEEL SURFACE SHALL BE ACCEPTED OR REJECTED ON THE BASIS OF THE CRITERIA OF AWS D1.1/D1.1M TABLE 6.2
2d) BEAM COPE AND ACCESS HOLE NDT			MT OR PENETRANT TESTING OF WELD SPLICES AND CONNECTIONS, THERMALLY CUT SURFACES OF BEAM COPES AND ACCESS HOLES WHERE FLANGE THICKNESS EXCEEDS 1 1/2" FOR ROLLED SHAPES OR WHEN THE WEB THICKNESS EXCEEDS 1 1/2" FOR BUILT-UP SHAPES	
2e) WELD TAB REMOVAL SITES			AT THE END OF WELDS WHERE WELD TABS HAVE BEEN REMOVED, MT SHALL BE PERFORMED ON THE SAME BEAM-TO-COLUMN JOINTS RECEIVING UT AS REQUIRED UNDER ITEM 2b	MT OF CONTINUTITY PLATE WELD TABS REMOVAL SITES IS NOT REQUIRED.

STATEMENT OF SPECIAL INSPECTION NOTES:

1. SPECIAL INSPECTIONS SHALL CONFORM TO SECTION 1705 OF THE 2014 OSSC, CONTRACT DOCUMENTS AND APPROVED SUBMITTALS. REFER TO TABLES 1 THROUGH 4 FOR SPECIAL INSPECTION AND TABLES 6, 7 AND 7A FOR TESTING REQUIREMENTS.

2. SPECIAL INSPECTIONS AND ASSOCIATED TESTING SHALL BE PERFORMED BY AN APPROVED ACCREDITED INDEPENDENT AGENCY MEETING THE REQUIREMENTS OF ASTM E329 (MATERIALS). THE INSPECTION AND TESTING AGENCY SHALL FURNISH TO THE STRUCTURAL ENGINEER AND ARCHITECT A COPY OF THEIR SCOPE OF ACCREDITATION. SPECIAL INSPECTORS SHALL BE APPROVED BY THE BUILDING OFFICIAL. WELDING INSPECTORS SHALL BE QUALIFIED PER SECTION 6.1.4.1.1 OF AWS D1.1.

3. THE SPECIAL INSPECTOR SHALL OBSERVE THE INDICATED WORK FOR COMPLIANCE WITH THE APPROVED CONSTRUCTION DOCUMENTS. ALL DISCREPANCIES SHALL BE BROUGHT TO THE ATTENTION OF THE CONTRACTOR FOR CORRECTION AND NOTED IN THE INSPECTION REPORTS.

4. THE SPECIAL INSPECTOR AND GEOTECHNICAL ENGINEER SHALL FURNISH INSPECTION REPORTS FOR EACH INSPECTION TO THE BUILDING OFFICIAL, STRUCTURAL ENGINEER, ARCHITECT, CONTRACTOR, AND OWNER. THE SPECIAL INSPECTION AGENCY SHALL SUBMIT A FINAL REPORT STATING THAT THE WORK REQUIRING SPECIAL INSPECTION WAS INSPECTED AND IS IN CONFORMANCE WITH THE APPROVED CONSTRUCTION DOCUMENTS AND THAT ALL DISCREPANCIES NOTED IN THE INSPECTION REPORTS HAVE BEEN CORRECTED.

5 FOR STEEL INSPECTIONS PER AISC 360 AND 341 (TABLES 2A AND 4A):
QUALITY ASSURANCE (QA) IS REQUIRED FOR EACH ITEM IN TABLES UNLESS SPECIFICALLY NOTED OTHERWISE.
QUALITY CONTORL (QC) TO BE PROVIDED BY THE FABRICATOR, ERECTOR OR OTHER RESPONSIBLE CONTRACTOR AS APPLICABLE. CONTRACTOR AND SPECIAL INSPECTOR TO DOCUMENT QUALITY CONTROL AS REQUIRED IN AISC 360 SECTION N3 AND AISC 341 SECTION J2.

6 INSPECTION TYPES
CONTINUOUS : THE FULL-TIME OBSERVATION OF WORK REQUIRING SPECIAL INSPECTION BY AN APPROVED SPECIAL INSPECTOR WHO IS PRESENT IN THE AREA WHERE THE WORK IS BEING PERFORMED.
PERIODIC : THE PART-TIME OR INTERMITTENT OBSERVATION OF WORK REQUIRING SPECIAL INSPECTION BY AN APPROVED SPECIAL INSPECTOR WHO IS PRESENT IN THE AREA WHERE THE WORK HAS BEEN OR IS BEING PERFORMED AND AT THE COMPLETION OF THE WORK.
OBSERVE : OBSERVE THESE FUNCTIONS ON A RANDOM, DAILY BASIS. OPERATIONS NEED NOT BE DELAYED PENDING OBSERVATIONS.
PERFORM : INSPECTIONS SHALL BE PERFORMED PRIOR TO THE FINAL ACCEPTANCE OF THE ITEM.

7 PERFORM INSPECTION PRIOR TO FINAL ACCEPTANCE OF THE ITEM FOR TEN WELDS TO BE MADE BY A GIVEN WELDER, WITH THE WELDER DEMONSTRATING UNDERSTANDING OF REQUIREMENTS AND POSSESSION OF SKILLS AND TOOLS TO VERIFY THESE ITEMS, THE PERFORM DESIGNATION OF THIS TASK SHALL BE REDUCED TO OBSERVE, AND THE WELDER SHALL PERFORM THIS TASK. SHOULD THE INSPECTOR DETERMINE THAT THE WELDER HAS DISCONTINUED PERFORMANCE OF THIS TASK, THE TASK SHALL BE RETURNED TO PERFORM UNTIL SUCH TIME AS THE INSPECTOR HAS RE-ESTABLISHED ADEQUATE ASSURANCE THAT THE WELDER WILL PERFORM THE INSPECTION TASKS LISTED

8 SPECIAL INSPECTION OF MECHANICAL POST INSTALLED ANCHORS SHALL BE IN STRICT CONFORMANCE WITH THE ICC REPORT AND MANUFACTURERS INSTALLATION REQUIREMENTS. ANCHOR INSTALLERS SHALL BE QUALIFIED AS REQUIRED BY JURISDICTION REQUIREMENTS.
- INSPECTION REPORTS SHALL IDENTIFY NAMES OF INSTALLERS.
- SPECIAL INSPECTOR SHALL PROVIDE DOCUMENTATION AT THE END OF ANCHOR INSTALLATIONS STATING THAT THE ANCHORS WERE INSPECTED PER APPROVED ANCHOR EVAULATION REPORT.

9 TABLE 7 ABBREVIATIONS:
NDT - NON-DESTRUCTIVE TESTING
CJP - COMPLETE JOINT PENETRATION
MT - MAGNETIC PARTICLE TESTING
RBS - REDUCED BEAM SECTION

10 DOCUMENT (D): INDICATES CONTRACTOR AND SPECIAL INSPECTOR TO PROVIDE DOCUMENTATION IN ACCORDANCE WITH AISC 341.

CONTRACTOR RESPONSIBILITY:

THE CONTRACTOR RESPONSIBLE FOR THE CONSTRUCTION OF THE MAIN WIND-OR SEISMIC-FORCE-RESISTING SYSTEM, OR A WIND-OR SEISMIC-RESISTING COMPONENT LISTED IN TABLES 4, 4A, 7, AND 7A SHALL SUBMIT A WRITTEN STATEMENT OF RESPONSIBILITY TO THE BUILDING OFFICIAL AND THE OWNER PRIOR TO THE COMMENCEMENT OF WORK ON THE SYSTEM OR COMPONENT. THE CONTRACTOR'S STATEMENT OF RESPONSIBILITY SHALL CONTAIN THE FOLLOWING:

ACKNOWLEDGEMENT OF AWARENESS OF THE SPECIAL REQUIREMENTS CONTAINED IN THE STATEMENT OF SPECIAL INSPECTIONS.

1. ACKNOWLEDGEMENT THAT CONTROL WILL BE EXERCISED TO OBTAIN CONFORMANCE WITH THE CONSTRUCTION DOCUMENTS APPROVED BY THE BUILDING OFFICIAL.

2. PROCEDURES FOR EXERCISING CONTROL WITHIN THE CONTRACTOR'S ORGANIZATION, THE METHOD AND FREQUENCY OF REPORTING AND DISTRIBUTION OF THE REPORTS.

3. IDENTIFICATION AND QUALIFICATIONS OF THE PERSON(S) EXERCISING SUCH CONTROL AND THEIR POSITION(S) IN THE ORGANIZATION.

BID/PERMIT SET

kpff

REGISTERED PROFESSIONAL ENGINEER 15773 OREGON JAN. 21, 1983 JERALD L. ABBITT

EXPIRES 12-31-19

SPECIAL INSPECTION AND TESTING
ACMA
BEAVERTON SCHOOL DISTRICT

S0.7
74-18109-00
03/14/2019
REVISIONS

DLR Group
Architecture Engineering Planning Interiors

© . DLR Group Architecture & Engineering Inc., an Oregon corporation, ALL RIGHTS RESERVED

C:\Users\bradf\Documents\10021800772_bradfrench3417.rvt
3/13/2019 2:51:30 PM

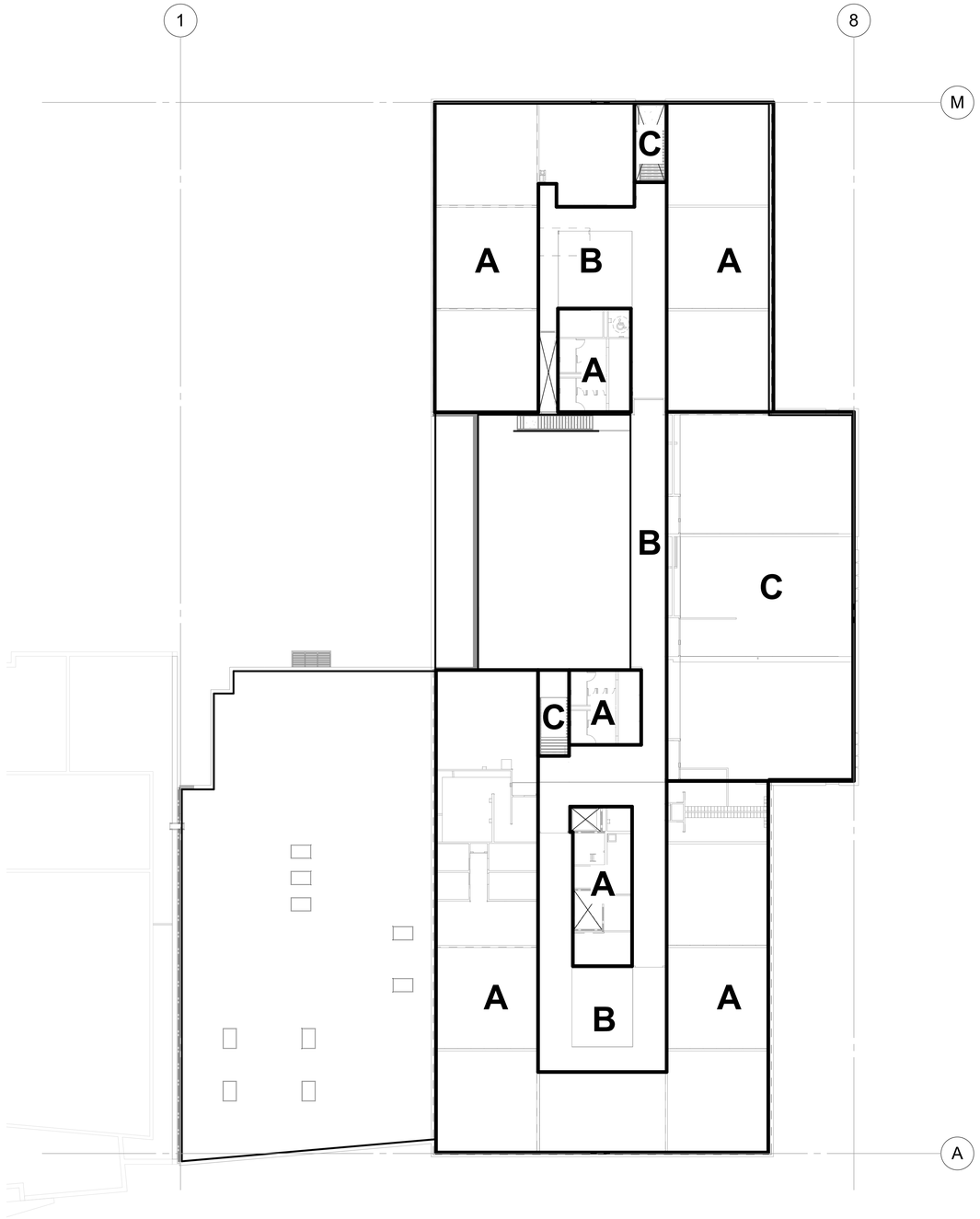

LOADING TYPE	LIVE LOAD	PARTITION
A	40 PSF	15 PSF
B	80 PSF	NONE
C	100 PSF	NONE

1 FLOOR LIVE LOADING PLAN - LEVEL 2
1" = 20'-0"

BID/PERMIT SET

kpff

STRUCTURAL REGISTERED PROFESSIONAL ENGINEER 15773 OREGON JAN. 21, 1992 JERALD L. ABDIE

EXPIRES 12-31-19

FLOOR LIVE LOADING PLANS
ACMA
BEAVERTON SCHOOL DISTRICT

S0.8
74-18109-00
03/14/2019
REVISIONS

DLR Group
Architecture Engineering Planning Interiors

© , DLR Group Architecture & Engineering Inc., an Oregon corporation, ALL RIGHTS RESERVED

C:\Users\brad\Documents\10021800772_bradfrench3417.rvt
3/13/2019 2:51:32 PM

C:\Users\brad\Documents\10021800772_bradfrench3417.rvt
3/13/2019 2:51:33 PM

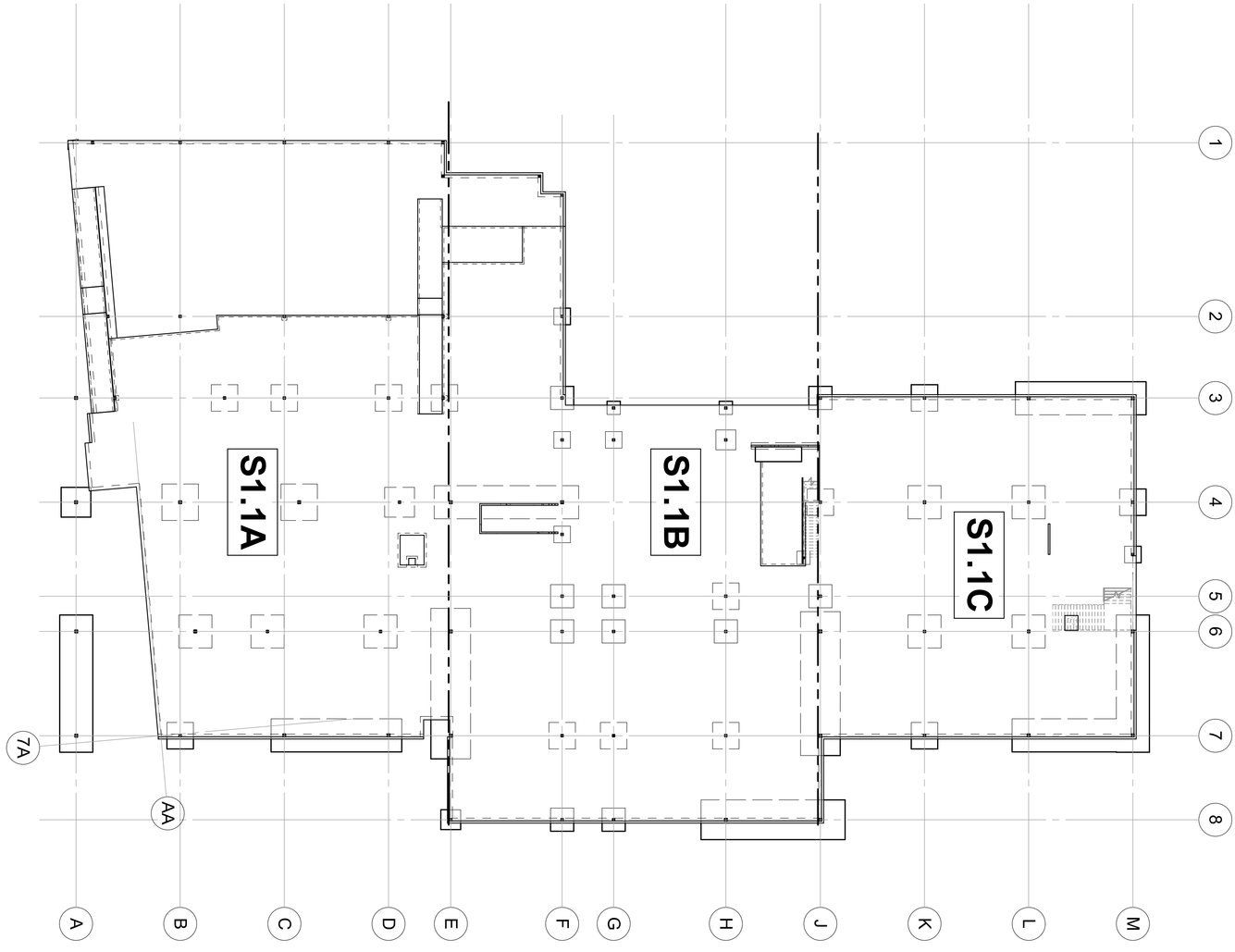

1 FOUNDATION PLAN, LEVEL 1 - OVERALL
1" = 20'-0"



KEY PLAN

DLR Group
Architecture Engineering Planning Interiors

S1.1
74-18109-00
03/14/2019
REVISIONS

FOUNDATION PLAN - OVERALL
ACMA
BEAVERTON SCHOOL DISTRICT

EXPIRES 12-31-19

kpff

BID/PERMIT SET

© , DLR Group Architecture & Engineering inc., an Oregon corporation, ALL RIGHTS RESERVED

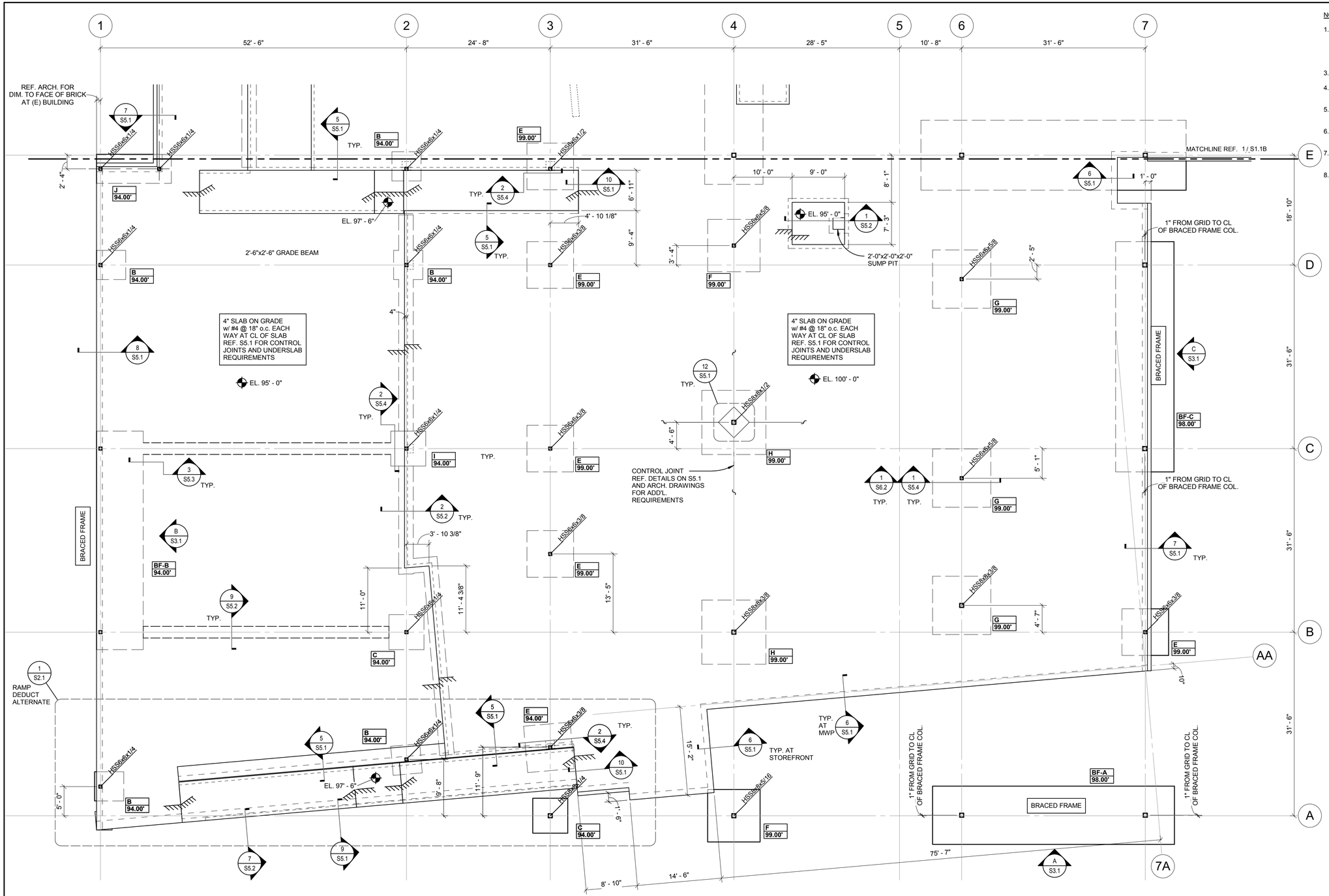

NOTES:

1. X / -XX.XX' — INDICATES FOOTING TYPE. REF. SCHEDULE ON PLANS. INDICATES TOP OF FOOTING ELEVATION.
3. EL. XXX'-XX" — INDICATES TOP OF SLAB ELEVATION.
4. INDICATES STEP IN ELEVATION. REF. 5/S5.1.
5. S —— S — INDICATES STEPPED FOOTING. REF. SHEET S5.3.
6. FIELD VERIFY EXISTING DIMENSIONS AND ELEVATIONS.
7. REF. SHEET S5.1 FOR TYPICAL CONCRETE DETAILS.
8. REF. ARCHITECTURAL, MECHANICAL, AND ELECTRICAL DRAWINGS FOR DUCTS, CONDUITS, SLEEVES BLOCKOUTS AND OTHER ITEMS TO BE COORDINATED WITH THE STRUCTURAL DRAWINGS.

FOOTING SCHEDULE				
MARK	SIZE "A"	SIZE "B"	THICKNESS	REINFORCING
A	4' - 0"	4' - 0"	1' - 0"	(4) #5 EACH WAY BOT.
B	5' - 0"	5' - 0"	1' - 0"	(5) #5 EACH WAY BOT.
C	6' - 0"	6' - 0"	1' - 0"	(6) #6 EACH WAY BOT.
D	7' - 0"	7' - 0"	1' - 6"	(7) #6 EACH WAY BOT.
E	8' - 0"	8' - 0"	1' - 6"	(8) #7 EACH WAY BOT.
F	9' - 0"	9' - 0"	1' - 6"	(9) #7 EACH WAY BOT.
G	10' - 0"	10' - 0"	2' - 0"	(10) #7 EACH WAY BOT.
H	11' - 0"	11' - 0"	2' - 0"	(11) #8 EACH WAY BOT.
I	6' - 0"	6' - 0"	2' - 0"	(7) #6 EACH WAY BOT.
J	5' - 0"	12' - 10"	1' - 6"	(6) #5 LONG. BOT. (14) #5 TRANS. BOT.

BRACED FRAME FOOTING SCHEDULE							
MARK	SIZE "A"	SIZE "B"	THICKNESS	REINFORCING Bottom Long.	REINFORCING Bottom Trans.	REINFORCING Top Long.	REINFORCING Top Trans.
BF-A	41' - 6"	10' - 0"	3' - 0"	(10) #8	(42) #8	(10) #8	(42) #8
BF-B	37' - 6"	8' - 0"	2' - 0"	(7) #7	(34) #7	(7) #7	(34) #7
BF-C	39' - 6"	10' - 0"	3' - 0"	(10) #8	(40) #8	(10) #8	(40) #8
BF-D	43' - 8"	10' - 0"	3' - 0"	(10) #8	(44) #8	(10) #8	(44) #8
BF-E	45' - 6"	12' - 0"	3' - 6"	(11) #9	(44) #9	(11) #9	(44) #9
BF-F	43' - 7"	12' - 0"	3' - 0"	(12) #8	(44) #8	(12) #8	(44) #8
BF-G	43' - 6"	12' - 0"	3' - 0"	(12) #8	(44) #8	(12) #8	(44) #8
BF-H	41' - 6"	10' - 0"	3' - 0"	(10) #8	(42) #8	(10) #8	(42) #8
BF-J	41' - 6"	10' - 0"	3' - 0"	(10) #8	(42) #8	(10) #8	(42) #8
BF-K	39' - 6"	10' - 0"	2' - 6"	(9) #8	(34) #8	(9) #8	(34) #8

1 FOUNDATION PLAN - AREA A
1/8" = 1'-0"

KEY PLAN

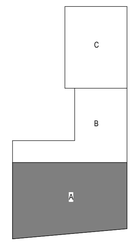

BID/PERMIT SET

kpff
STRUCTURAL REGISTERED PROFESSIONAL ENGINEER
15773
OREGON
JAN. 21, 1983
GERALD L. ABBIE
EXPIRES 12-31-19

FOUNDATION PLAN - AREA A
ACMA
BEAVERTON SCHOOL DISTRICT

S1.1A
74-18109-00
03/14/2019
REVISIONS

DLR Group
Architecture Engineering Planning Interiors

© DLR Group Architecture & Engineering Inc., an Oregon corporation, ALL RIGHTS RESERVED

C:\Users\brad\Documents\10021800772_kradfrench3417.rvt
3/13/2019 2:51:36 PM

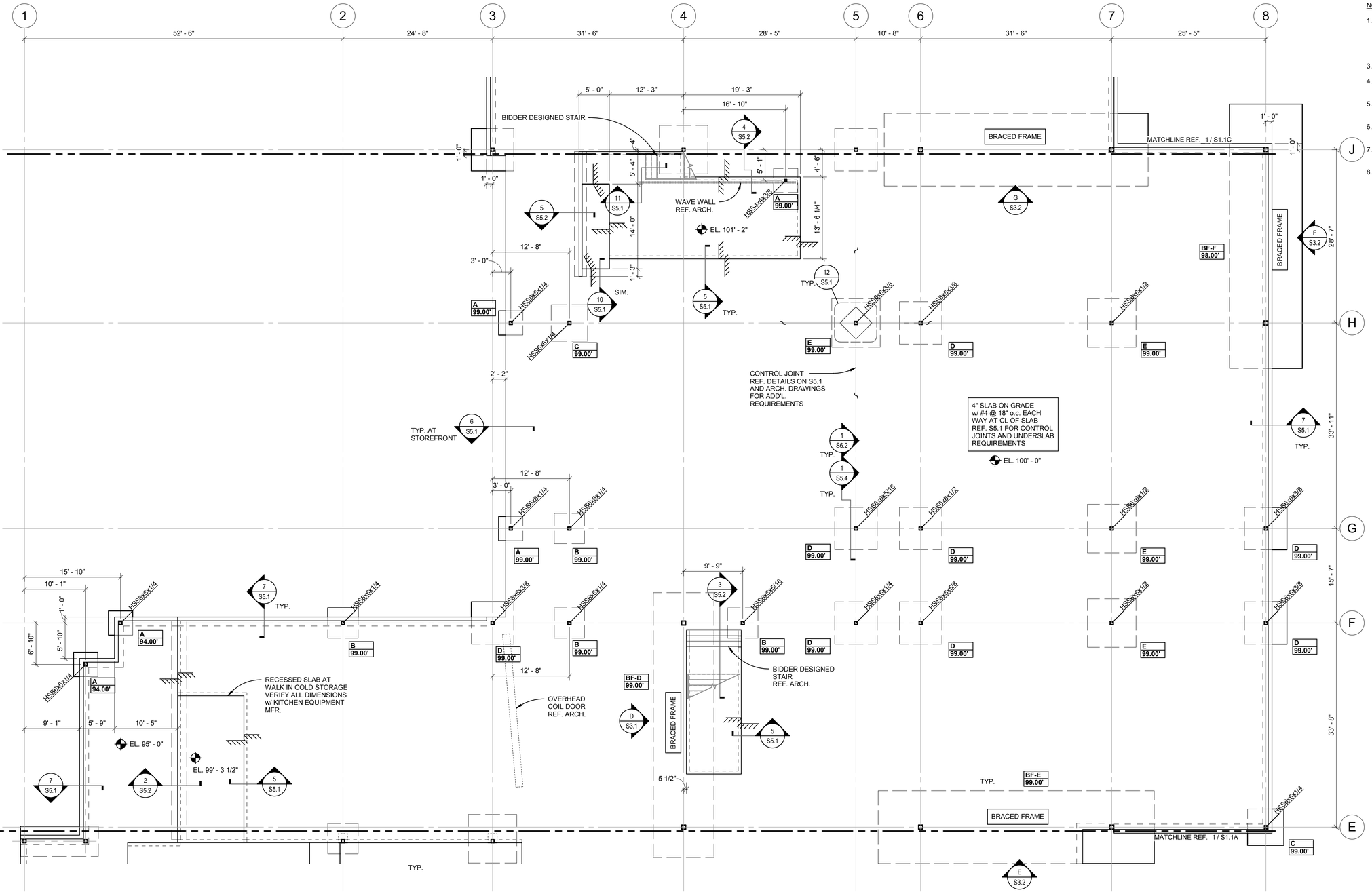

NOTES:

1. X / -XX.XX' — INDICATES FOOTING TYPE. REF. SCHEDULE ON PLANS. INDICATES TOP OF FOOTING ELEVATION.
3. EL. XXX'-XX" — INDICATES TOP OF SLAB ELEVATION.
4. INDICATES STEP IN ELEVATION. REF. 5/SS5.1.
5. S —— S — INDICATES STEPPED FOOTING. REF. SHEET S5.3.
6. FIELD VERIFY EXISTING DIMENSIONS AND ELEVATIONS.
7. REF. SHEET S5.1 FOR TYPICAL CONCRETE DETAILS.
8. REF. ARCHITECTURAL, MECHANICAL, AND ELECTRICAL DRAWINGS FOR DUCTS, CONDUITS, SLEEVES BLOCKOUTS AND OTHER ITEMS TO BE COORDINATED WITH THE STRUCTURAL DRAWINGS.

FOOTING SCHEDULE				
MARK	SIZE "A"	SIZE "B"	THICKNESS	REINFORCING
A	4' - 0"	4' - 0"	1' - 0"	(4) #5 EACH WAY BOT.
B	5' - 0"	5' - 0"	1' - 0"	(5) #5 EACH WAY BOT.
C	6' - 0"	6' - 0"	1' - 0"	(6) #6 EACH WAY BOT.
D	7' - 0"	7' - 0"	1' - 6"	(7) #6 EACH WAY BOT.
E	8' - 0"	8' - 0"	1' - 6"	(8) #7 EACH WAY BOT.
F	9' - 0"	9' - 0"	1' - 6"	(9) #7 EACH WAY BOT.
G	10' - 0"	10' - 0"	2' - 0"	(10) #7 EACH WAY BOT.
H	11' - 0"	11' - 0"	2' - 0"	(11) #8 EACH WAY BOT.
I	6' - 0"	6' - 0"	2' - 0"	(7) #6 EACH WAY BOT.
J	5' - 0"	12' - 10"	1' - 6"	(6) #5 LONG. BOT. (14) #5 TRANS. BOT.

BRACED FRAME FOOTING SCHEDULE							
MARK	SIZE "A"	SIZE "B"	THICKNESS	REINFORCING Bottom Long.	REINFORCING Bottom Trans.	REINFORCING Top Long.	REINFORCING Top Trans.
BF-A	41' - 6"	10' - 0"	3' - 0"	(10) #8	(42) #8	(10) #8	(42) #8
BF-B	37' - 6"	8' - 0"	2' - 0"	(7) #7	(34) #7	(7) #7	(34) #7
BF-C	39' - 6"	10' - 0"	3' - 0"	(10) #8	(40) #8	(10) #8	(40) #8
BF-D	43' - 8"	10' - 0"	3' - 0"	(10) #8	(44) #8	(10) #8	(44) #8
BF-E	45' - 6"	12' - 0"	3' - 6"	(11) #9	(44) #9	(11) #9	(44) #9
BF-F	43' - 7"	12' - 0"	3' - 0"	(12) #8	(44) #8	(12) #8	(44) #8
BF-G	43' - 6"	12' - 0"	3' - 0"	(12) #8	(44) #8	(12) #8	(44) #8
BF-H	41' - 6"	10' - 0"	3' - 0"	(10) #8	(42) #8	(10) #8	(42) #8
BF-J	41' - 6"	10' - 0"	3' - 0"	(10) #8	(42) #8	(10) #8	(42) #8
BF-K	39' - 6"	10' - 0"	2' - 6"	(9) #8	(34) #8	(9) #8	(34) #8

1 FOUNDATION PLAN - AREA B
1/8" = 1'-0"

KEY PLAN

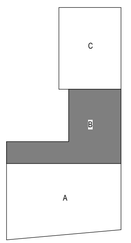

BID/PERMIT SET

kpff
STRUCTURAL REGISTERED PROFESSIONAL ENGINEER
15773
OREGON
JAN. 21, 1983
GERALD L ABDIE
EXPIRES 12-31-19

FOUNDATION PLAN - AREA B
ACMA
BEAVERTON SCHOOL DISTRICT

S1.1B
74-18109-00
03/14/2019
REVISIONS

DLR Group
Architecture Engineering Planning Interiors

© DLR Group Architecture & Engineering Inc., an Oregon corporation, ALL RIGHTS RESERVED

C:\Users\brad\Documents\10021800772_bradfrench3417.rvt
3/13/2019 2:51:39 PM

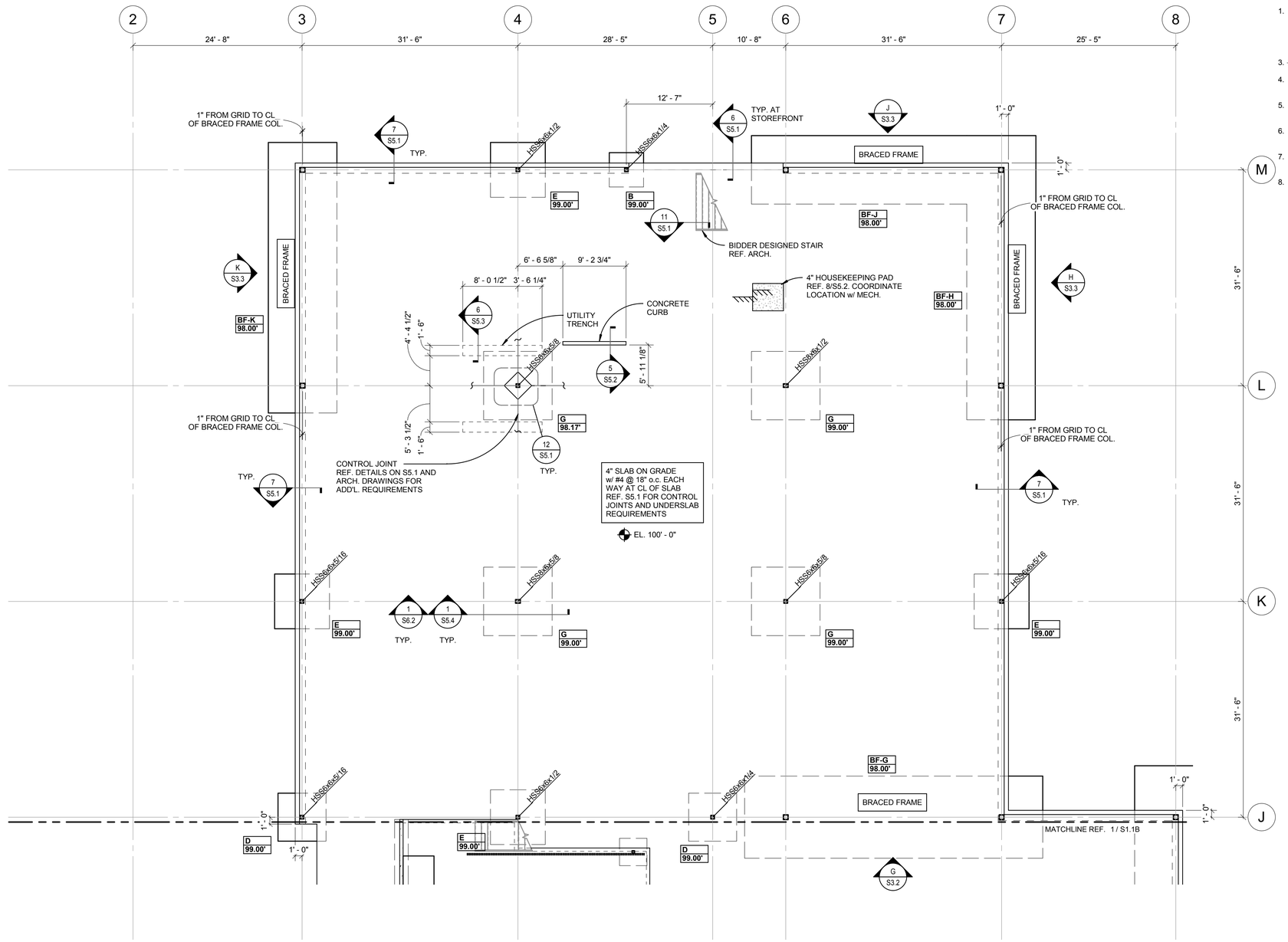

NOTES:

1. X / -XX.XX' — INDICATES FOOTING TYPE. REF. SCHEDULE ON PLANS. INDICATES TOP OF FOOTING ELEVATION.
3. EL. XXX'-XX" — INDICATES TOP OF SLAB ELEVATION.
4. INDICATES STEP IN ELEVATION. REF. 5/SS5.1.
5. S —— S — INDICATES STEPPED FOOTING. REF. SHEET S5.3.
6. FIELD VERIFY EXISTING DIMENSIONS AND ELEVATIONS.
7. REF. SHEET S5.1 FOR TYPICAL CONCRETE DETAILS.
8. REF. ARCHITECTURAL, MECHANICAL, AND ELECTRICAL DRAWINGS FOR DUCTS, CONDUITS, SLEEVES BLOCKOUTS AND OTHER ITEMS TO BE COORDINATED WITH THE STRUCTURAL DRAWINGS.

FOOTING SCHEDULE				
MARK	SIZE "A"	SIZE "B"	THICKNESS	REINFORCING
A	4' - 0"	4' - 0"	1' - 0"	(4) #5 EACH WAY BOT.
B	5' - 0"	5' - 0"	1' - 0"	(5) #5 EACH WAY BOT.
C	6' - 0"	6' - 0"	1' - 0"	(6) #6 EACH WAY BOT.
D	7' - 0"	7' - 0"	1' - 6"	(7) #6 EACH WAY BOT.
E	8' - 0"	8' - 0"	1' - 6"	(8) #7 EACH WAY BOT.
F	9' - 0"	9' - 0"	1' - 6"	(9) #7 EACH WAY BOT.
G	10' - 0"	10' - 0"	2' - 0"	(10) #7 EACH WAY BOT.
H	11' - 0"	11' - 0"	2' - 0"	(11) #8 EACH WAY BOT.
I	6' - 0"	6' - 0"	2' - 0"	(7) #6 EACH WAY BOT.
J	5' - 0"	12' - 10"	1' - 6"	(6) #5 LONG. BOT. (14) #5 TRANS. BOT.

BRACED FRAME FOOTING SCHEDULE							
MARK	SIZE "A"	SIZE "B"	THICKNESS	REINFORCING Bottom Long.	REINFORCING Bottom Trans.	REINFORCING Top Long.	REINFORCING Top Trans.
BF-A	41' - 6"	10' - 0"	3' - 0"	(10) #8	(42) #8	(10) #8	(42) #8
BF-B	37' - 6"	8' - 0"	2' - 0"	(7) #7	(34) #7	(7) #7	(34) #7
BF-C	39' - 6"	10' - 0"	3' - 0"	(10) #8	(40) #8	(10) #8	(40) #8
BF-D	43' - 8"	10' - 0"	3' - 0"	(10) #8	(44) #8	(10) #8	(44) #8
BF-E	45' - 6"	12' - 0"	3' - 6"	(11) #9	(44) #9	(11) #9	(44) #9
BF-F	43' - 7"	12' - 0"	3' - 0"	(12) #8	(44) #8	(12) #8	(44) #8
BF-G	43' - 6"	12' - 0"	3' - 0"	(12) #8	(44) #8	(12) #8	(44) #8
BF-H	41' - 6"	10' - 0"	3' - 0"	(10) #8	(42) #8	(10) #8	(42) #8
BF-J	41' - 6"	10' - 0"	3' - 0"	(10) #8	(42) #8	(10) #8	(42) #8
BF-K	39' - 6"	10' - 0"	2' - 6"	(9) #8	(34) #8	(9) #8	(34) #8

1 FOUNDATION PLAN - AREA C
1/8" = 1'-0"

KEY PLAN

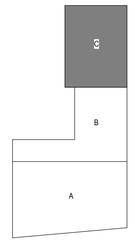

BID/PERMIT SET

kpff
STRUCTURAL ENGINEER
REGISTERED PROFESSIONAL ENGINEER
15773
OREGON
JAN. 21, 1983
GERALD L ABDILLE
EXPIRES 12-31-19

FOUNDATION PLAN - AREA C
ACMA
BEAVERTON SCHOOL DISTRICT

S1.1C
74-18109-00
03/14/2019
REVISIONS

DLR Group
Architecture Engineering Planning Interiors

© DLR Group Architecture & Engineering Inc., an Oregon corporation, ALL RIGHTS RESERVED

C:\Users\brad\Documents\18021800772_bradfrench3417.rvt
3/13/2019 2:51:42 PM

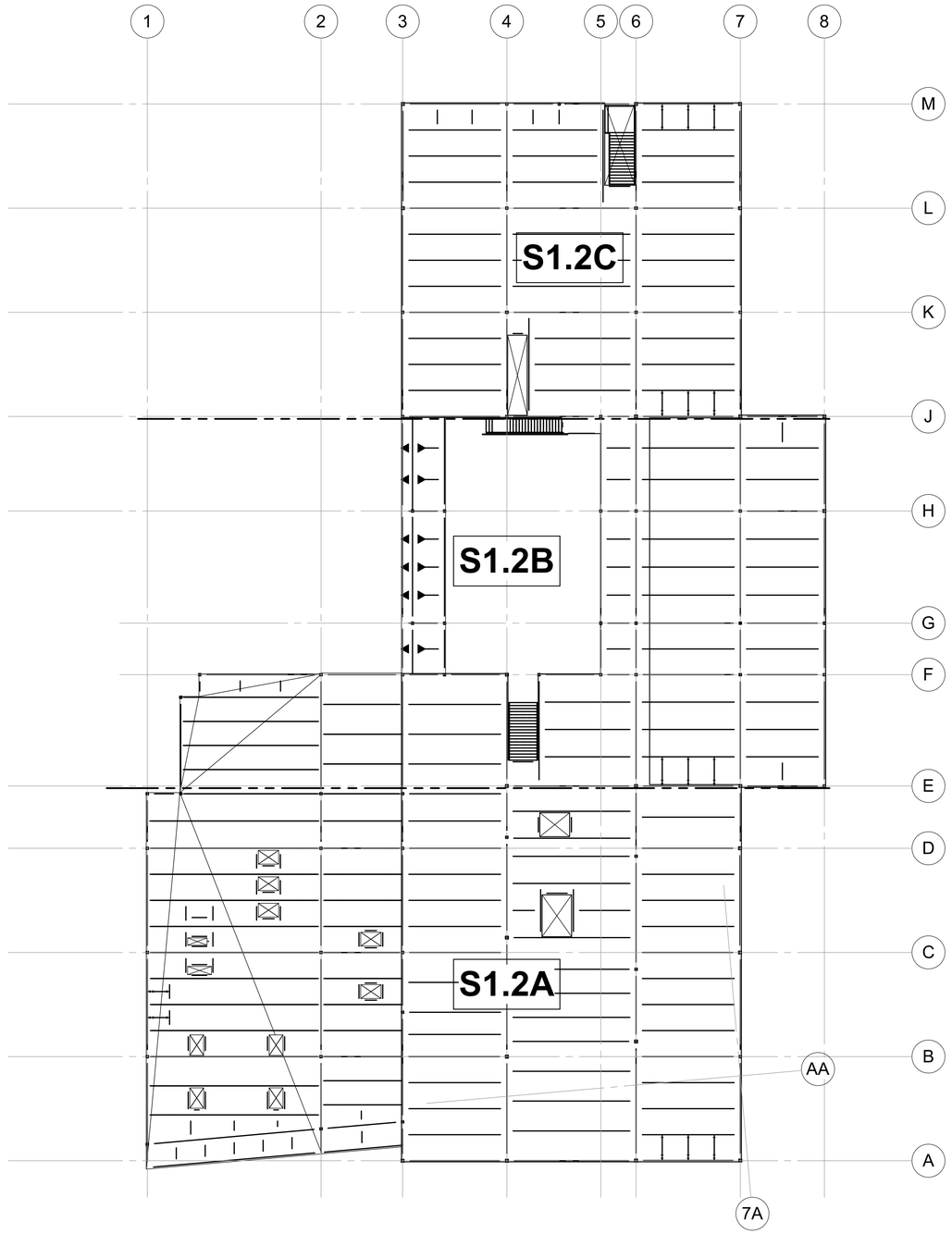

1 FRAMING PLAN, LEVEL 2 - OVERALL
1" = 20'-0"

KEY PLAN

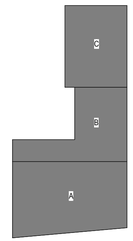

BID/PERMIT SET

kpff

STRUCTURAL REGISTERED PROFESSIONAL ENGINEER 15773 OREGON JULY 21, 1983 GERALD L ABDIE

EXPIRES 12-31-19

FRAMING PLAN, LEVEL 2 - OVERALL
ACMA
BEAVERTON SCHOOL DISTRICT

S1.2
74-18109-00
03/14/2019
REVISIONS

DLR Group
Architecture Engineering Planning Interiors

© DLR Group Architecture & Engineering Inc., an Oregon corporation, ALL RIGHTS RESERVED

NORTH

C:\Users\bradf\Documents\10021800772_bradfrench3417.rvt
3/13/2019 2:51:43 PM

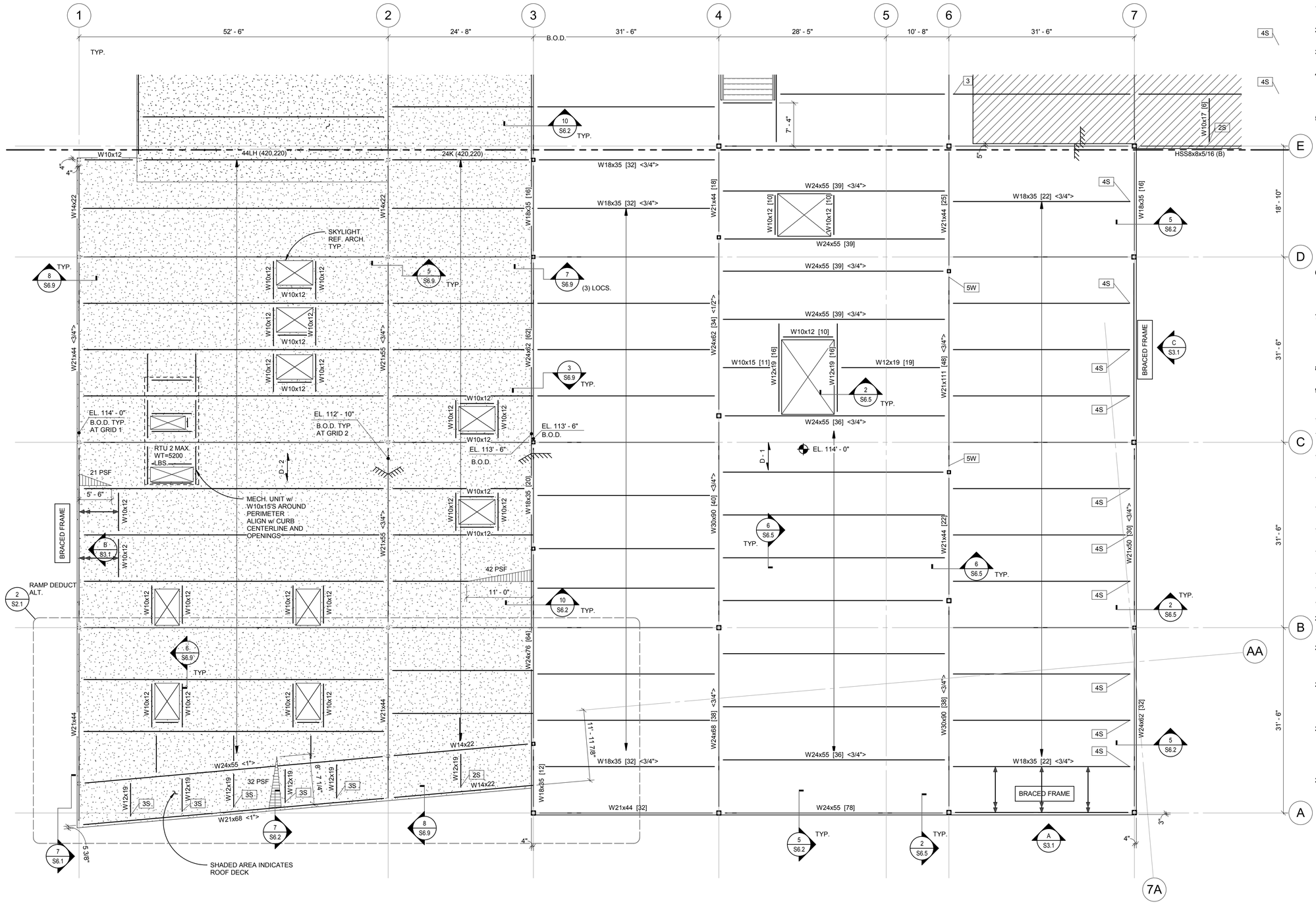

NOTES:

1. REF. SHEET S6.1 THRU S6.5 FOR TYPICAL STEEL DETAILS.
2. BEAMS ARE EQUALLY SPACED IN BAYS U.N.O.
3. BEAMS ARE CENTERED ON COLUMNS, WALLS AND/OR GRID LINES, U.N.O
4. [X] INDICATES CONNECTION TYPE. REF. SHEET S6.1 FOR SCHEDULES AND CONNECTION DETAILS. REF. NOTE 5 WHERE CONNECTION TYPES ARE NOT SHOWN.
5. PROVIDE THE FOLLOWING CONNECTION TYPES UNLESS NOTED OTHERWISE ON THE PLANS. REF. DETAILS ON S6.1 FOR REQUIREMENTS:

BEAM DESIGNATION	CONNECTION TYPE
W8	2D
W10	2
W12, W14	3
W16, W18	4
W21, W24	5
W27, W30	6

6. [XX] INDICATES NUMBER OF 3/4"Øx4 1/2" HEADED STUDS EVENLY DISTRIBUTED ALONG BEAM LENGTH. REF. DETAIL 7/S6.5 FOR TYPICAL COMPOSITE BEAM STUD SPACING DETAIL.
7. [X-X-X] INDICATES NUMBER OF 3/4"Øx4 1/2" HEADED STUDS EVENLY DISTRIBUTED BETWEEN WF BEAMS ON WF GIRDERS. REF. DETAIL 7/S6.5 FOR TYPICAL COMPOSITE BEAM STUD SPACING DETAIL.
8. <X"> INDICATES UPWARD CAMBER AT MID SPAN.
9. D - X INDICATES SPAN DIRECTION OF DECK. REF. SCHEDULE 1/S6.5 FOR DECK INFORMATION.
10. EL. XXX'-XX" INDICATES TOP OF SLAB ELEVATION.
11. EL. XXX'-XX" B.O.D. INDICATES BOTTOM OF DECK ELEVATION.
12. INDICATES MOMENT CONNECTION. REF. 1/S6.3 FOR DETAILS.
13. INDICATES SFRS COLLECTOR CONNECTION. REF. S3.11 FOR DETAILS.
14. INDICATES DIAGONAL BRACING AT WF BEAM. REF. S3.12.
15. X INDICATES BEAM PENETRATION. REF. SCHEDULE, 4/S6.3, AND 5/S6.3.
16. REF. SHEET S6.7 FOR TYPICAL DECK REINFORCING AT OPENINGS.
17. (A) INDICATES ABOVE.
18. (B) INDICATES BELOW
19. (E) INDICATES EXISTING.
20. INDICATES COLUMN BELOW. REF. DETAIL 7/S6.1 FOR BEAM OVER COL. DETAIL
21. X PSF L INDICATES EXTENT AND MAXIMUM VALUE OF DRIFTING SNOW LOAD DRIFT IS IN ADDITION TO A BALANCED SNOW LOAD OF 11 PSF.
22. XXX INDICATES MEMBER PART OF SEISMIC FORCE RESISTING SYSTEM (SFRS). REF. GENERAL STRUCTURAL NOTES, SPECIFICATIONS, AND DETAILS FOR REQUIREMENTS.
23. REFERENCE ARCHITECTURAL, MECHANICAL AND ELECTRICAL DRAWINGS FOR DUCTS, CONDUITS, SLEEVES, BLOCKOUTS AND OTHER ITEMS TO BE COORDINATED WITH THE STRUCTURAL DRAWINGS.
24. REFERNCE S6.10 FOR ROOF TIE-OFF DETAILS. REFERENCE ARCHITECTURAL DRAWINGS FOR LOCATIONS.

NOTES CONT'D:

25. XXK (YYY,ZZZ) INDICATES XX" DEEP K SERIES OPEN WEB JOIST WITH A TOTAL UNIFORM DEAD LOAD PLUS SNOW LOAD OF YYY PLF AND A UNIFORM SNOW LOAD OF ZZZ PLF (SERVICE LEVEL). REF. PLAN FOR ADDITIONAL LOADS. LH OR DLH WHERE OCCURS.
26. X"KD X"KL X"KW INDICATES ADDITIONAL VERTICAL LOAD IN KIPS (SERVICE LEVEL) TO TOP CHORD OF OWJ. "D" INDICATES DEAD LOAD, "L" INDICATES LIVE LOAD AND "E" INDICATES SEISMIC LOAD. "W" INDICATES WIND LOAD.
27. XK INDICATES AXIAL TENSION OR COMPRESSION LOAD IN KIPS (SERVICE LEVEL) IN TOP CHORD OF JOIST DUE TO WIND OR SEISMIC LOADS.
28. LOADS BEYOND WHAT ARE SHOWN ON THE PLANS SHALL NOT BE APPLIED TO OPEN WEB JOISTS OR GIRDERS WITHOUT WRITTEN PERMISSION FROM THE ENGINEER OF RECORD.
29. DO NOT WELD TO OPEN WEB JOISTS EXCEPT AS SHOWN IN DETAILS OR AS APPROVED BY THE ENGINEER OF RECORD.

KEY PLAN

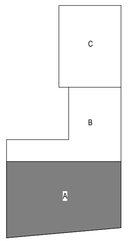

1 FRAMING PLAN, LEVEL 2 - AREA A
1/8" = 1'-0"

BID/PERMIT SET

kpff

REGISTERED PROFESSIONAL ENGINEER
15,773
OREGON
JAN. 21, 1983
GERALD L. ABDILLA
EXPIRES 12-31-19

FRAMING PLAN, LEVEL 2 - AREA A
ACMA
BEAVERTON SCHOOL DISTRICT

S1.2A
74-18109.00
03/14/2019
REVISIONS

DLR Group
Architecture Engineering Planning Interiors

© DLR Group Architecture & Engineering Inc., an Oregon corporation, ALL RIGHTS RESERVED

C:\Users\bradl\Documents\18021800772_bradfrench3417.rvt
3/13/2019 2:51:45 PM

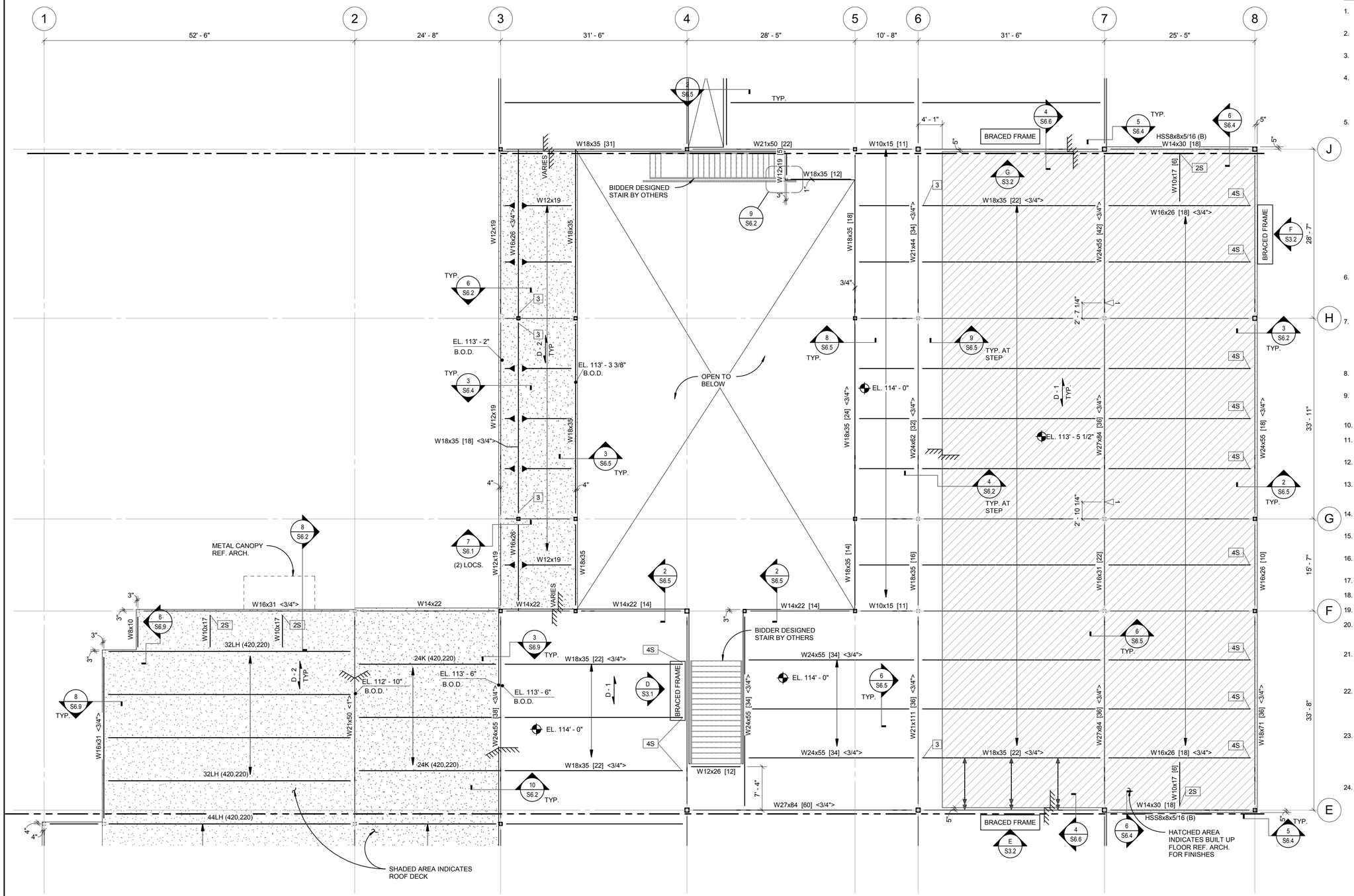

1 FRAMING PLAN, LEVEL 2 - AREA B
1/8" = 1'-0"

NOTES:

1. REF. SHEET S6.1 THRU S6.5 FOR TYPICAL STEEL DETAILS.
2. BEAMS ARE EQUALLY SPACED IN BAYS U.N.O.
3. BEAMS ARE CENTERED ON COLUMNS, WALLS AND/OR GRID LINES, U.N.O
4. [X] INDICATES CONNECTION TYPE. REF. SHEET S6.1 FOR SCHEDULES AND CONNECTION DETAILS. REF. NOTE 5 WHERE CONNECTION TYPES ARE NOT SHOWN.
5. PROVIDE THE FOLLOWING CONNECTION TYPES UNLESS NOTED OTHERWISE ON THE PLANS. REF. DETAILS ON S6.1 FOR REQUIREMENTS:

BEAM DESIGNATION	CONNECTION TYPE
W8	2D
W10	2
W12, W14	3
W16, W18	4
W21, W24	5
W27, W30	6

6. [XX] INDICATES NUMBER OF 3/4"Øx4 1/2" HEADED STUDS EVENLY DISTRIBUTED ALONG BEAM LENGTH. REF. DETAIL 7/S6.5 FOR TYPICAL COMPOSITE BEAM STUD SPACING DETAIL.
7. [X-X-X] INDICATES NUMBER OF 3/4"Øx4 1/2" HEADED STUDS EVENLY DISTRIBUTED BETWEEN WF BEAMS ON WF GIRDERS. REF. DETAIL 7/S6.5 FOR TYPICAL COMPOSITE BEAM STUD SPACING DETAIL.
8. <X"> INDICATES UPWARD CAMBER AT MID SPAN.
9. D - X INDICATES SPAN DIRECTION OF DECK. REF. SCHEDULE 1/S6.5 FOR DECK INFORMATION.
10. EL. XXX'-XX" INDICATES TOP OF SLAB ELEVATION.
11. EL. XXX'-XX" B.O.D. INDICATES BOTTOM OF DECK ELEVATION.
12. INDICATES MOMENT CONNECTION. REF. 1/S6.3 FOR DETAILS.
13. INDICATES SFRS COLLECTOR CONNECTION. REF. S3.11 FOR DETAILS.
14. INDICATES DIAGONAL BRACING AT WF BEAM. REF. S3.12.
15. X INDICATES BEAM PENETRATION. REF. SCHEDULE, 4/S6.3, AND 5/S6.3.
16. REF. SHEET S6.7 FOR TYPICAL DECK REINFORCING AT OPENINGS.
17. (A) INDICATES ABOVE.
18. (B) INDICATES BELOW
19. (E) INDICATES EXISTING.
20. INDICATES COLUMN BELOW. REF. DETAIL 7/S6.1 FOR BEAM OVER COL. DETAIL
21. X PSF L INDICATES EXTENT AND MAXIMUM VALUE OF DRIFTING SNOW LOAD DRIFT IS IN ADDITION TO A BALANCED SNOW LOAD OF 11 PSF.
22. XXX INDICATES MEMBER PART OF SEISMIC FORCE RESISTING SYSTEM (SFRS). REF. GENERAL STRUCTURAL NOTES, SPECIFICATIONS, AND DETAILS FOR REQUIREMENTS.
23. REFERENCE ARCHITECTURAL, MECHANICAL AND ELECTRICAL DRAWINGS FOR DUCTS, CONDUITS, SLEEVES, BLOCKOUTS AND OTHER ITEMS TO BE COORDINATED WITH THE STRUCTURAL DRAWINGS.
24. REFERNCE S6.10 FOR ROOF TIE-OFF DETAILS. REFERENCE ARCHITECTURAL DRAWINGS FOR LOCATIONS.

NOTES CONT'D:

25. XXK (YYY,ZZZ) INDICATES XX" DEEP K SERIES OPEN WEB JOIST WITH A TOTAL UNIFORM DEAD LOAD PLUS SNOW LOAD OF YYY PLF AND A UNIFORM SNOW LOAD OF ZZZ PLF (SERVICE LEVEL). REF. PLAN FOR ADDITIONAL LOADS. LH OR DLH WHERE OCCURS.
26. X XKO XXKL XK INDICATES ADDITIONAL VERTICAL LOAD IN KIPS (SERVICE LEVEL) TO TOP CHORD OF OWJ. "D" INDICATES DEAD LOAD, "L" INDICATES LIVE LOAD AND "E" INDICATES SEISMIC LOAD. "W" INDICATES WIND LOAD.
27. INDICATES AXIAL TENSION OR COMPRESSION LOAD IN KIPS (SERVICE LEVEL) IN TOP CHORD OF JOIST DUE TO WIND OR SEISMIC LOADS.
28. LOADS BEYOND WHAT ARE SHOWN ON THE PLANS SHALL NOT BE APPLIED TO OPEN WEB JOISTS OR GIRDERS WITHOUT WRITTEN PERMISSION FROM THE ENGINEER OF RECORD.
29. DO NOT WELD TO OPEN WEB JOISTS EXCEPT AS SHOWN IN DETAILS OR AS APPROVED BY THE ENGINEER OF RECORD.

KEY PLAN

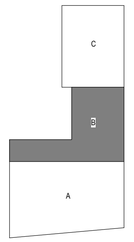

BID/PERMIT SET

kpff

STRUCTURAL REGISTERED PROFESSIONAL ENGINEER 15773 OREGON JAN. 21, 1983 GERALD L ABDILLA

EXPIRES 12-31-19

FRAMING PLAN, LEVEL 2 - AREA B
ACMA
BEAVERTON SCHOOL DISTRICT

S1.2B
74-18109-00
03/14/2019
REVISIONS

DLR Group
Architecture Engineering Planning Interiors

© DLR Group Architecture & Engineering Inc., an Oregon corporation, ALL RIGHTS RESERVED

C:\Users\brad\Documents\10021800772_bradfrench3417.rvt
3/13/2019 2:51:48 PM

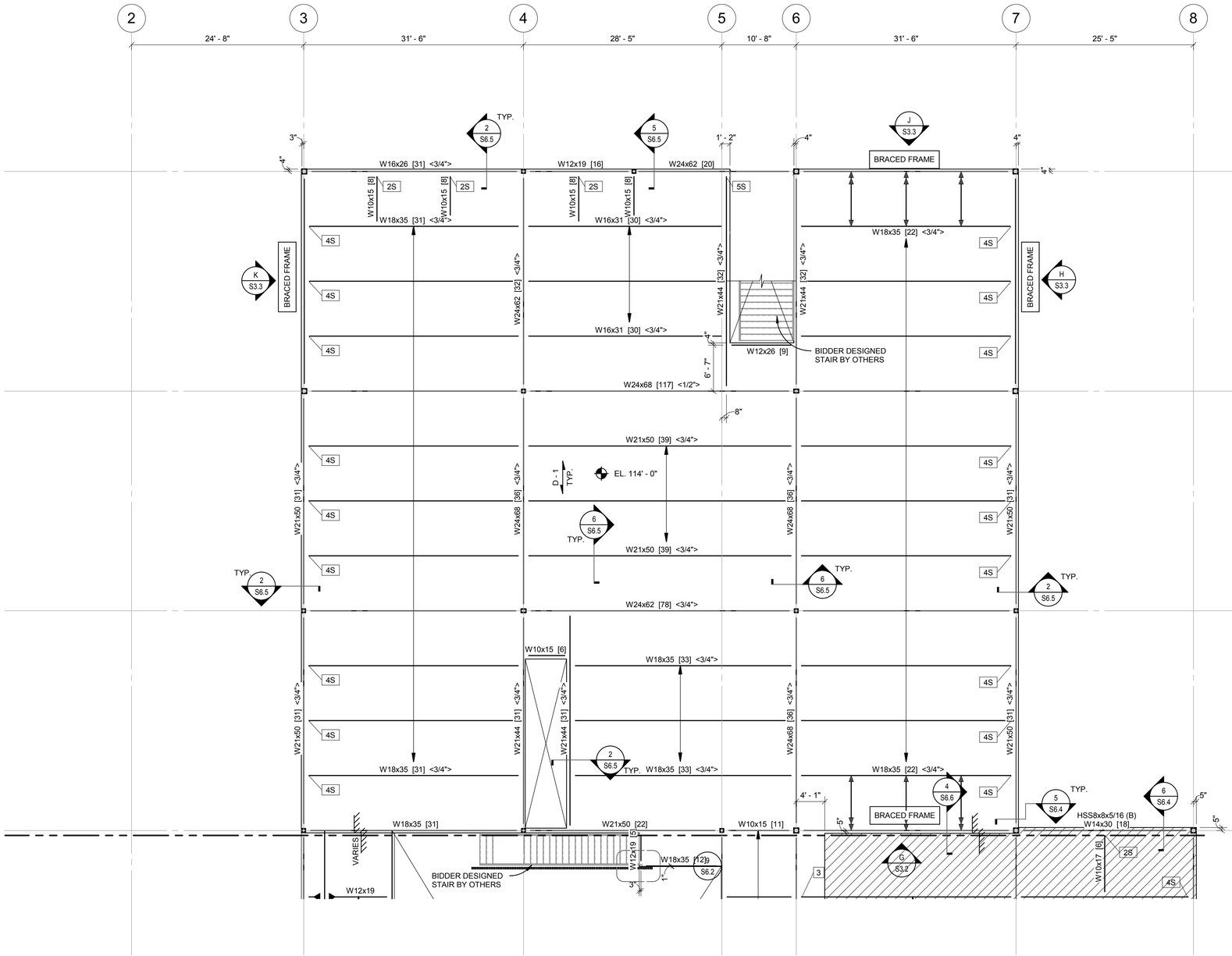

1 FRAMING PLAN, LEVEL 2 - AREA C

1/8" = 1'-0"

N

NOTES:

1. REF. SHEET S6.1 THRU S6.5 FOR TYPICAL STEEL DETAILS.
2. BEAMS ARE EQUALLY SPACED IN BAYS U.N.O.
3. BEAMS ARE CENTERED ON COLUMNS, WALLS AND/OR GRID LINES, U.N.O
4. [X] INDICATES CONNECTION TYPE. REF. SHEET S6.1 FOR SCHEDULES AND CONNECTION DETAILS. REF. NOTE 5 WHERE CONNECTION TYPES ARE NOT SHOWN.
5. PROVIDE THE FOLLOWING CONNECTION TYPES UNLESS NOTED OTHERWISE ON THE PLANS. REF. DETAILS ON S6.1 FOR REQUIREMENTS:

BEAM DESIGNATION	CONNECTION TYPE
W8	2D
W10	2
W12, W14	3
W16, W18	4
W21, W24	5
W27, W30	6

6. [XX] INDICATES NUMBER OF 3/4"Øx4 1/2" HEADED STUDS EVENLY DISTRIBUTED ALONG BEAM LENGTH. REF. DETAIL 7/S6.5 FOR TYPICAL COMPOSITE BEAM STUD SPACING DETAIL.
7. [X-X-X] INDICATES NUMBER OF 3/4"Øx4 1/2" HEADED STUDS EVENLY DISTRIBUTED BETWEEN WF BEAMS ON WF GIRDERS. REF. DETAIL 7/S6.5 FOR TYPICAL COMPOSITE BEAM STUD SPACING DETAIL.
8. <X"> INDICATES UPWARD CAMBER AT MID SPAN.
9. D - X INDICATES SPAN DIRECTION OF DECK. REF. SCHEDULE 1/S6.5 FOR DECK INFORMATION.
10. EL. XXX'-XX" INDICATES TOP OF SLAB ELEVATION.
11. EL. XXX'-XX" B.O.D. INDICATES BOTTOM OF DECK ELEVATION.
12. INDICATES MOMENT CONNECTION. REF. 1/S6.3 FOR DETAILS.
13. INDICATES SFRS COLLECTOR CONNECTION. REF. S3.11 FOR DETAILS.
14. INDICATES DIAGONAL BRACING AT WF BEAM. REF. S3.12.
15. X INDICATES BEAM PENETRATION. REF. SCHEDULE, 4/S6.3, AND 5/S6.3.
16. REF. SHEET S6.7 FOR TYPICAL DECK REINFORCING AT OPENINGS.
17. (A) INDICATES ABOVE.
18. (B) INDICATES BELOW
19. (E) INDICATES EXISTING.
20. INDICATES COLUMN BELOW. REF. DETAIL 7/S6.1 FOR BEAM OVER COL. DETAIL
21. X PSF L INDICATES EXTENT AND MAXIMUM VALUE OF DRIFTING SNOW LOAD DRIFT IS IN ADDITION TO A BALANCED SNOW LOAD OF 11 PSF.
22. XXX INDICATES MEMBER PART OF SEISMIC FORCE RESISTING SYSTEM (SFRS). REF. GENERAL STRUCTURAL NOTES, SPECIFICATIONS, AND DETAILS FOR REQUIREMENTS.
23. REFERENCE ARCHITECTURAL, MECHANICAL AND ELECTRICAL DRAWINGS FOR DUCTS, CONDUITS, SLEEVES, BLOCKOUTS AND OTHER ITEMS TO BE COORDINATED WITH THE STRUCTURAL DRAWINGS.
24. REFERNCE S6.10 FOR ROOF TIE-OFF DETAILS. REFERENCE ARCHITECTURAL DRAWINGS FOR LOCATIONS.

KEY PLAN

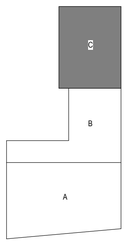

BID/PERMIT SET

kpff

REGISTERED PROFESSIONAL ENGINEER
15773
OREGON
JAN. 21, 1983
GERALD L ABDIEL
EXPIRES 12-31-19

FRAMING PLAN, LEVEL 2 - AREA C
ACMA
BEAVERTON SCHOOL DISTRICT

S1.2C
74-18109-00
03/14/2019
REVISIONS

DLR Group
Architecture Engineering Planning Interiors

© , DLR Group Architecture & Engineering inc., an Oregon corporation, ALL RIGHTS RESERVED

C:\Users\bradl\Documents\10021800772_bradfrench3417.rvt
3/13/2019 2:51:50 PM

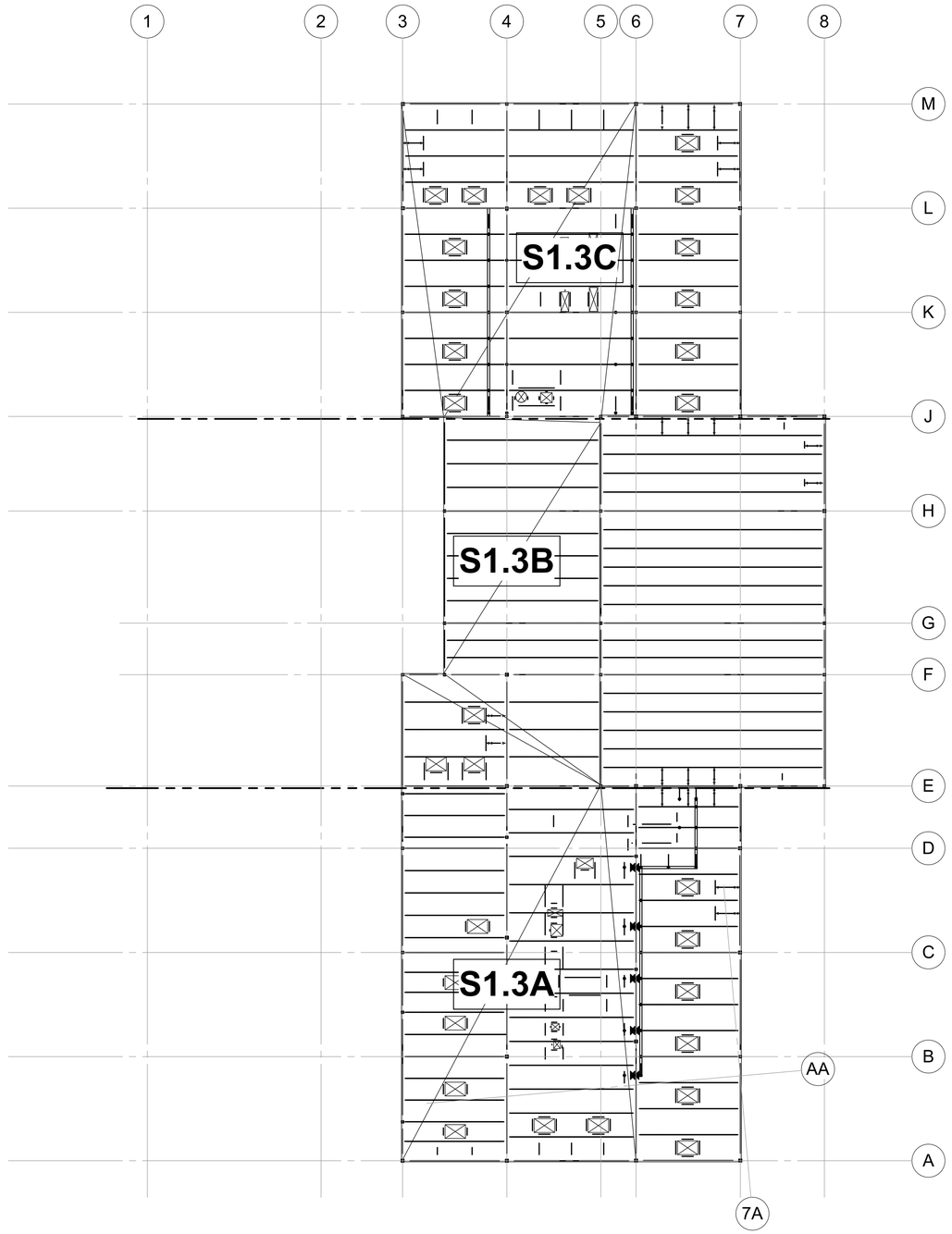

1 FRAMING PLAN, ROOF - OVERALL
1" = 20'-0"

KEY PLAN

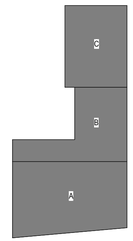

BID/PERMIT SET

kpff

STRUCTURAL ENGINEER
REGISTERED PROFESSIONAL ENGINEER
15773
OREGON
JAN. 21, 1983
GERALD L ABDIE
EXPIRES 12-31-19

FRAMING PLAN, ROOF - OVERALL
ACMA
BEAVERTON SCHOOL DISTRICT

S1.3
74-18109-00
03/14/2019
REVISIONS

DLR Group
Architecture Engineering Planning Interiors

© DLR Group Architecture & Engineering Inc., an Oregon corporation, ALL RIGHTS RESERVED

NORTH

C:\Users\bradf\Documents\10021800772_bradfrench3417.rvt
3/13/2019 2:51:51 PM

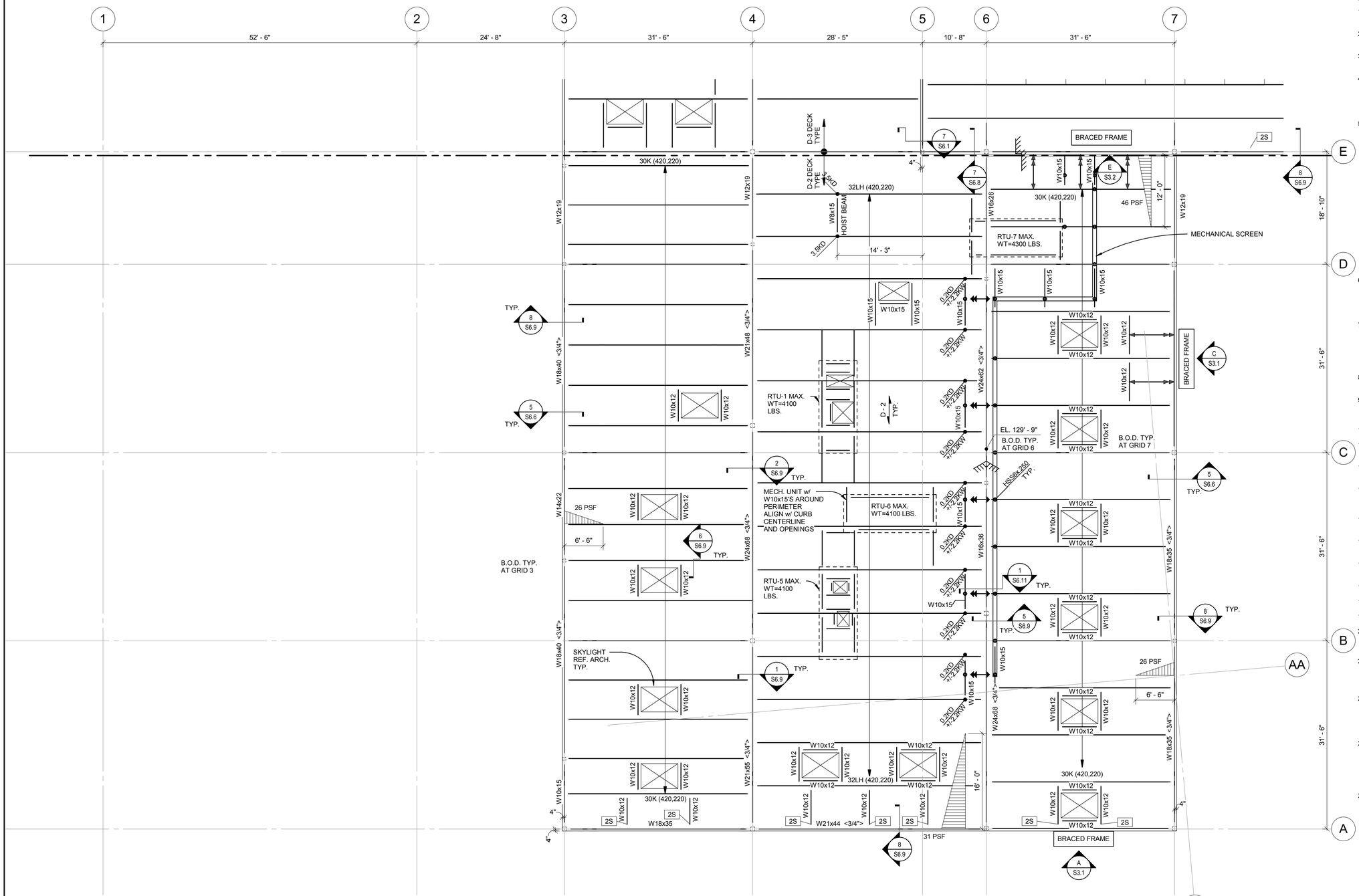

NOTES:

1. REF. SHEET S6.1 THRU S6.5 FOR TYPICAL STEEL DETAILS.
2. BEAMS ARE EQUALLY SPACED IN BAYS U.N.O.
3. BEAMS ARE CENTERED ON COLUMNS, WALLS AND/OR GRID LINES, U.N.O
4. [X] INDICATES CONNECTION TYPE. REF. SHEET S6.1 FOR SCHEDULES AND CONNECTION DETAILS. REF. NOTE 5 WHERE CONNECTION TYPES ARE NOT SHOWN.
5. PROVIDE THE FOLLOWING CONNECTION TYPES UNLESS NOTED OTHERWISE ON THE PLANS. REF. DETAILS ON S6.1 FOR REQUIREMENTS:

BEAM DESIGNATION	CONNECTION TYPE
W8	2D
W10	2
W12, W14	3
W16, W18	4
W21, W24	5
W27, W30	6

6. [XX] INDICATES NUMBER OF 3/4"Øx4 1/2" HEADED STUDS EVENLY DISTRIBUTED ALONG BEAM LENGTH. REF. DETAIL 7/S6.5 FOR TYPICAL COMPOSITE BEAM STUD SPACING DETAIL.
7. [X-X-X] INDICATES NUMBER OF 3/4"Øx4 1/2" HEADED STUDS EVENLY DISTRIBUTED BETWEEN WF BEAMS ON WF GIRDERS. REF. DETAIL 7/S6.5 FOR TYPICAL COMPOSITE BEAM STUD SPACING DETAIL.
8. <X"> INDICATES UPWARD CAMBER AT MID SPAN.
9. D - X INDICATES SPAN DIRECTION OF DECK. REF. SCHEDULE 1/S6.5 FOR DECK INFORMATION.
10. EL. XXX'-XX" INDICATES TOP OF SLAB ELEVATION.
11. EL. XXX'-XX" B.O.D. INDICATES BOTTOM OF DECK ELEVATION.
12. INDICATES MOMENT CONNECTION. REF. 1/S6.3 FOR DETAILS.
13. INDICATES SFRS COLLECTOR CONNECTION. REF. S3.11 FOR DETAILS.
14. INDICATES DIAGONAL BRACING AT WF BEAM. REF. S3.12.
15. X INDICATES BEAM PENETRATION. REF. SCHEDULE, 4/S6.3, AND 5/S6.3.
16. REF. SHEET S6.7 FOR TYPICAL DECK REINFORCING AT OPENINGS.
17. (A) INDICATES ABOVE.
18. (B) INDICATES BELOW
19. (E) INDICATES EXISTING.
20. INDICATES COLUMN BELOW. REF. DETAIL 7/S6.1 FOR BEAM OVER COL. DETAIL
21. X PSF / L INDICATES EXTENT AND MAXIMUM VALUE OF DRIFTING SNOW LOAD DRIFT IS IN ADDITION TO A BALANCED SNOW LOAD OF 11 PSF.
22. XXX INDICATES MEMBER PART OF SEISMIC FORCE RESISTING SYSTEM (SFRS). REF. GENERAL STRUCTURAL NOTES, SPECIFICATIONS, AND DETAILS FOR REQUIREMENTS.
23. REFERENCE ARCHITECTURAL, MECHANICAL AND ELECTRICAL DRAWINGS FOR DUCTS, CONDUITS, SLEEVES, BLOCKOUTS AND OTHER ITEMS TO BE COORDINATED WITH THE STRUCTURAL DRAWINGS.
24. REFERNCE S6.10 FOR ROOF TIE-OFF DETAILS. REFERENCE ARCHITECTURAL DRAWINGS FOR LOCATIONS.

NOTES CONT'D:

25. XXK (YYY,ZZZ) INDICATES XX" DEEP K SERIES OPEN WEB JOIST WITH A TOTAL UNIFORM DEAD LOAD PLUS SNOW LOAD OF YYY PLF AND A UNIFORM SNOW LOAD OF ZZZ PLF (SERVICE LEVEL). REF. PLAN FOR ADDITIONAL LOADS. LH OR DLH WHERE OCCURS.
26. Y XKD / XXKL / XK INDICATES ADDITIONAL VERTICAL LOAD IN KIPS (SERVICE LEVEL) TO TOP CHORD OF OWJ. "D" INDICATES DEAD LOAD. "L" INDICATES LIVE LOAD AND "E" INDICATES SEISMIC LOAD. "W" INDICATES WIND LOAD.
27. INDICATES AXIAL TENSION OR COMPRESSION LOAD IN KIPS (SERVICE LEVEL) IN TOP CHORD OF JOIST DUE TO WIND OR SEISMIC LOADS.
28. LOADS BEYOND WHAT ARE SHOWN ON THE PLANS SHALL NOT BE APPLIED TO OPEN WEB JOISTS OR GIRDERS WITHOUT WRITTEN PERMISSION FROM THE ENGINEER OF RECORD.
29. DO NOT WELD TO OPEN WEB JOISTS EXCEPT AS SHOWN IN DETAILS OR AS APPROVED BY THE ENGINEER OF RECORD.

KEY PLAN

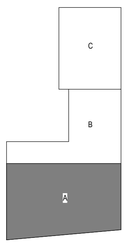

1 FRAMING PLAN, ROOF - AREA A
1/8" = 1'-0"

N

NORTH

BID/PERMIT SET

kpff
STRUCTURAL ENGINEER
REGISTERED PROFESSIONAL ENGINEER
15,773
OREGON
JAN. 21, 1983
GERALD L ABDIL
EXPIRES 12-31-19

FRAMING PLAN, ROOF - AREA A
ACMA
BEAVERTON SCHOOL DISTRICT

S1.3A
74-18109-00
03/14/2019
REVISIONS

DLR Group
Architecture Engineering Planning Interiors

© DLR Group Architecture & Engineering Inc., an Oregon corporation, ALL RIGHTS RESERVED

C:\Users\brad\Documents\1002180772_bradfrench3417.rvt
3/13/2019 2:51:53 PM

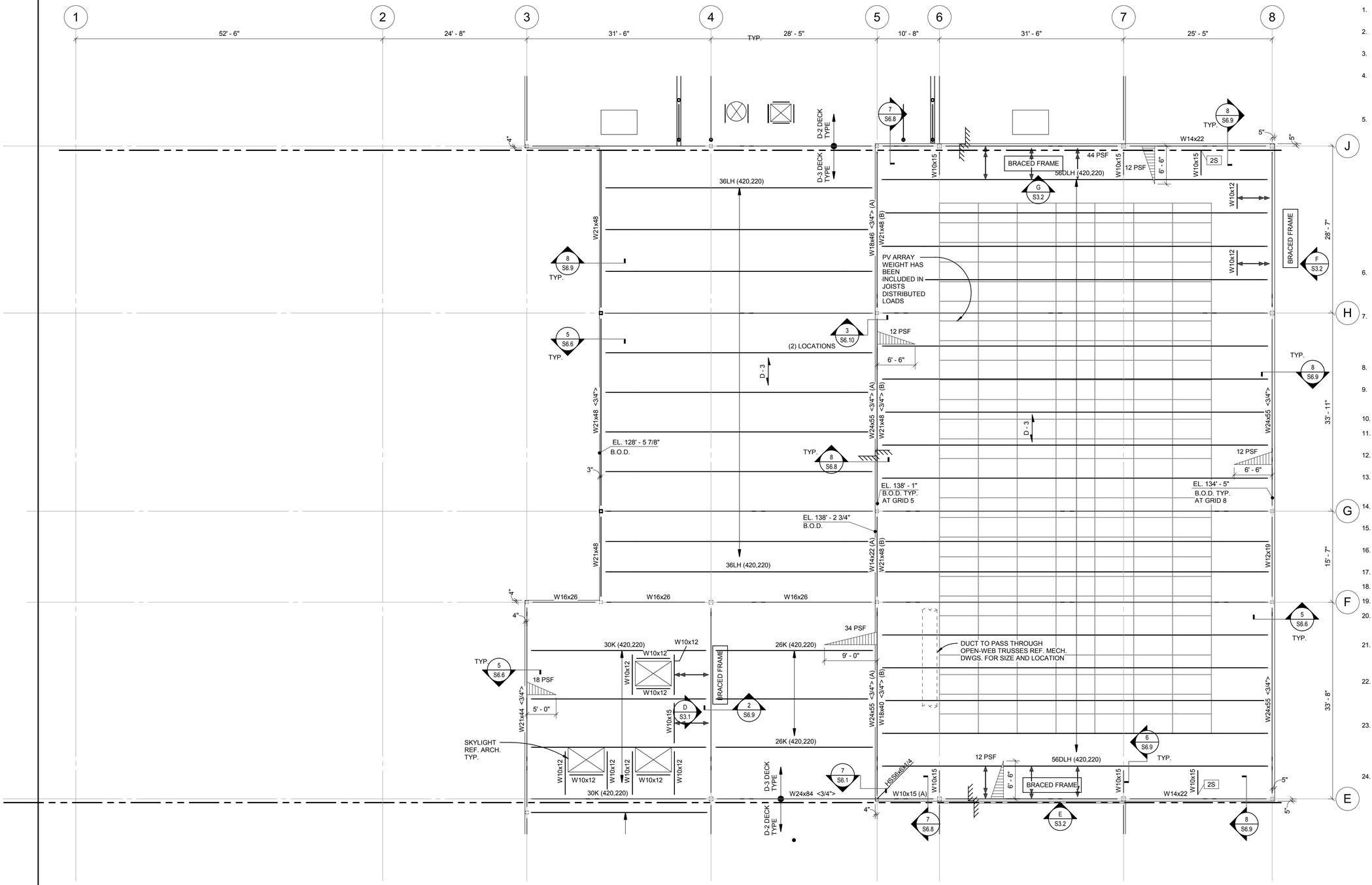

NOTES:

1. REF. SHEET S6.1 THRU S6.5 FOR TYPICAL STEEL DETAILS.
2. BEAMS ARE EQUALLY SPACED IN BAYS U.N.O.
3. BEAMS ARE CENTERED ON COLUMNS, WALLS AND/OR GRID LINES, U.N.O
4. [X] INDICATES CONNECTION TYPE. REF. SHEET S6.1 FOR SCHEDULES AND CONNECTION DETAILS. REF. NOTE 5 WHERE CONNECTION TYPES ARE NOT SHOWN.
5. PROVIDE THE FOLLOWING CONNECTION TYPES UNLESS NOTED OTHERWISE ON THE PLANS. REF. DETAILS ON S6.1 FOR REQUIREMENTS:

BEAM DESIGNATION	CONNECTION TYPE
W8	2D
W10	2
W12, W14	3
W16, W18	4
W21, W24	5
W27, W30	6

6. [XX] INDICATES NUMBER OF 3/4"Øx4 1/2" HEADED STUDS EVENLY DISTRIBUTED ALONG BEAM LENGTH. REF. DETAIL 7/S6.5 FOR TYPICAL COMPOSITE BEAM STUD SPACING DETAIL.
7. [X-X-X] INDICATES NUMBER OF 3/4"Øx4 1/2" HEADED STUDS EVENLY DISTRIBUTED BETWEEN WF BEAMS ON WF GIRDERS. REF. DETAIL 7/S6.5 FOR TYPICAL COMPOSITE BEAM STUD SPACING DETAIL.
8. <X"> INDICATES UPWARD CAMBER AT MID SPAN.
9. D - X INDICATES SPAN DIRECTION OF DECK. REF. SCHEDULE 1/S6.5 FOR DECK INFORMATION.
10. EL. XXX'-XX" INDICATES TOP OF SLAB ELEVATION.
11. EL. XXX'-XX" B.O.D. INDICATES BOTTOM OF DECK ELEVATION.
12. INDICATES MOMENT CONNECTION. REF. 1/S6.3 FOR DETAILS.
13. INDICATES SFRS COLLECTOR CONNECTION. REF. S3.11 FOR DETAILS.
14. INDICATES DIAGONAL BRACING AT WF BEAM. REF. S3.12.
15. X INDICATES BEAM PENETRATION. REF. SCHEDULE, 4/S6.3, AND 5/S6.3.
16. REF. SHEET S6.7 FOR TYPICAL DECK REINFORCING AT OPENINGS.
17. (A) INDICATES ABOVE.
18. (B) INDICATES BELOW
19. (E) INDICATES EXISTING.
20. INDICATES COLUMN BELOW. REF. DETAIL 7/S6.1 FOR BEAM OVER COL. DETAIL
21. X PSF L INDICATES EXTENT AND MAXIMUM VALUE OF DRIFTING SNOW LOAD DRIFT IS IN ADDITION TO A BALANCED SNOW LOAD OF 11 PSF.
22. XXX INDICATES MEMBER PART OF SEISMIC FORCE RESISTING SYSTEM (SFRS). REF. GENERAL STRUCTURAL NOTES, SPECIFICATIONS, AND DETAILS FOR REQUIREMENTS.
23. REFERENCE ARCHITECTURAL, MECHANICAL AND ELECTRICAL DRAWINGS FOR DUCTS, CONDUITS, SLEEVES, BLOCKOUTS AND OTHER ITEMS TO BE COORDINATED WITH THE STRUCTURAL DRAWINGS.
24. REFERNCE S6.10 FOR ROOF TIE-OFF DETAILS. REFERENCE ARCHITECTURAL DRAWINGS FOR LOCATIONS.

NOTES CONT'D:

25. XXK (YYY,ZZZ) INDICATES XX" DEEP K SERIES OPEN WEB JOIST WITH A TOTAL UNIFORM DEAD LOAD PLUS SNOW LOAD OF YYY PLF AND A UNIFORM SNOW LOAD OF ZZZ PLF (SERVICE LEVEL). REF. PLAN FOR ADDITIONAL LOADS. LH OR DLH WHERE OCCURS.
26. XXKD+XXKL+XXKW XK INDICATES ADDITIONAL VERTICAL LOAD IN KIPS (SERVICE LEVEL) TO TOP CHORD OF OWJ. "D" INDICATES DEAD LOAD. "L" INDICATES LIVE LOAD AND "E" INDICATES SEISMIC LOAD. "W" INDICATES WIND LOAD.
27. INDICATES AXIAL TENSION OR COMPRESSION LOAD IN KIPS (SERVICE LEVEL) IN TOP CHORD OF JOIST DUE TO WIND OR SEISMIC LOADS.
28. LOADS BEYOND WHAT ARE SHOWN ON THE PLANS SHALL NOT BE APPLIED TO OPEN WEB JOISTS OR GIRDERS WITHOUT WRITTEN PERMISSION FROM THE ENGINEER OF RECORD.
29. DO NOT WELD TO OPEN WEB JOISTS EXCEPT AS SHOWN IN DETAILS OR AS APPROVED BY THE ENGINEER OF RECORD.

KEY PLAN

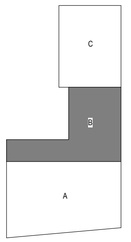

1 FRAMING PLAN, ROOF - AREA B
1/8" = 1'-0"

BID/PERMIT SET

kpff
STRUCTURAL ENGINEER
REGISTERED PROFESSIONAL ENGINEER
15773
OREGON
JAN. 21, 1983
GERALD L. ABDILLA
EXPIRES 12-31-19

FRAMING PLAN, ROOF - AREA B
ACMA
BEAVERTON SCHOOL DISTRICT

S1.3B
74-18109-00
03/14/2019
REVISIONS

DLR Group
Architecture Engineering Planning Interiors

© , DLR Group Architecture & Engineering Inc., an Oregon corporation. ALL RIGHTS RESERVED

C:\Users\brad\Documents\10021800772_bradfrench3417.rvt
3/13/2019 2:51:55 PM

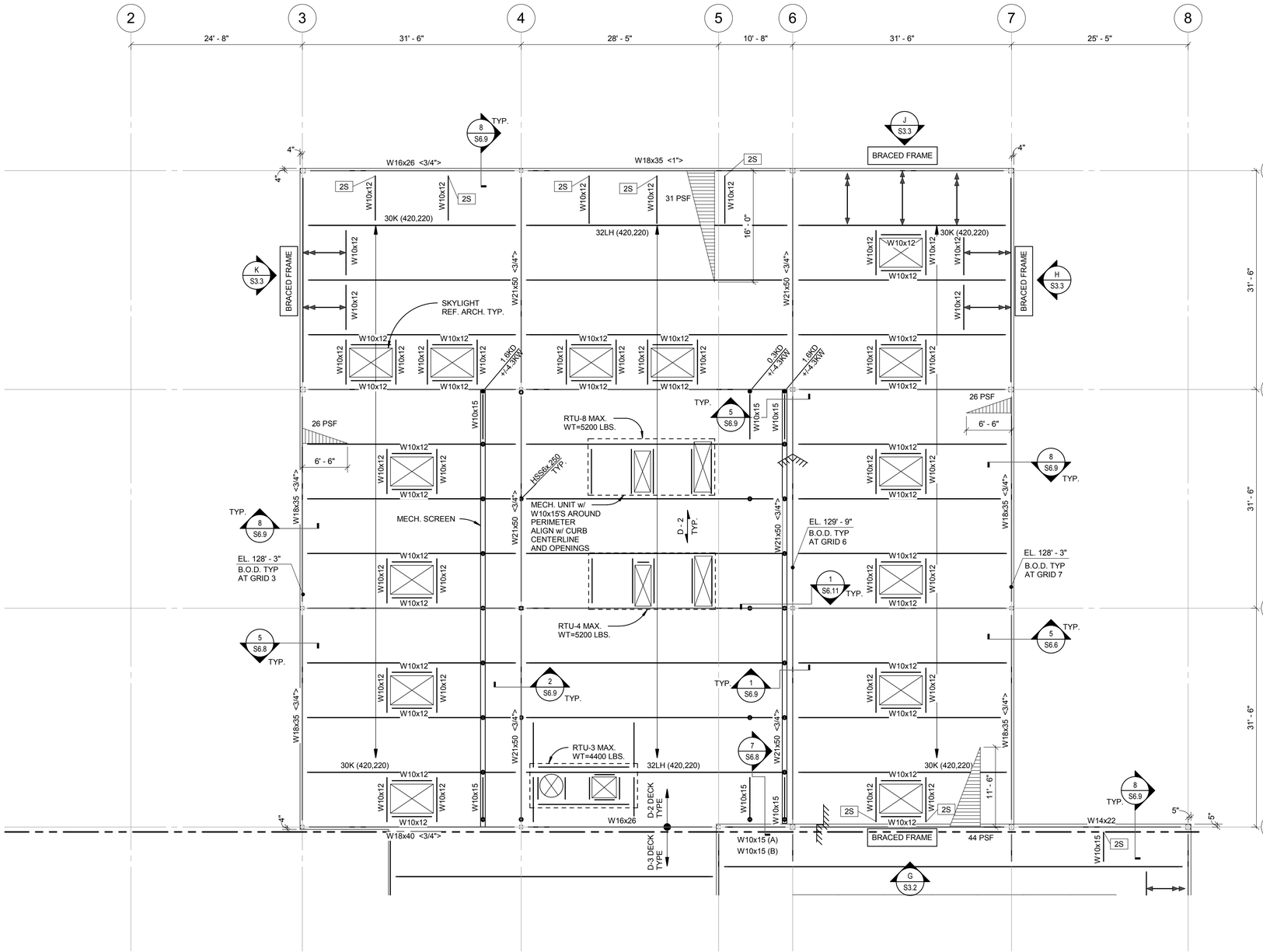

1 FRAMING PLAN, ROOF - AREA C
1/8" = 1'-0"

NOTES:

1. REF. SHEET S6.1 THRU S6.5 FOR TYPICAL STEEL DETAILS.
2. BEAMS ARE EQUALLY SPACED IN BAYS U.N.O.
3. BEAMS ARE CENTERED ON COLUMNS, WALLS AND/OR GRID LINES, U.N.O
4. [X] INDICATES CONNECTION TYPE. REF. SHEET S6.1 FOR SCHEDULES AND CONNECTION DETAILS. REF. NOTE 5 WHERE CONNECTION TYPES ARE NOT SHOWN.
5. PROVIDE THE FOLLOWING CONNECTION TYPES UNLESS NOTED OTHERWISE ON THE PLANS. REF. DETAILS ON S6.1 FOR REQUIREMENTS:

BEAM DESIGNATION	CONNECTION TYPE
W8	2D
W10	2
W12, W14	3
W16, W18	4
W21, W24	5
W27, W30	6

6. [XX] INDICATES NUMBER OF 3/4"Øx4 1/2" HEADED STUDS EVENLY DISTRIBUTED ALONG BEAM LENGTH. REF. DETAIL 7/S6.5 FOR TYPICAL COMPOSITE BEAM STUD SPACING DETAIL.
7. [X-X-X] INDICATES NUMBER OF 3/4"Øx4 1/2" HEADED STUDS EVENLY DISTRIBUTED BETWEEN WF BEAMS ON WF GIRDERS. REF. DETAIL 7/S6.5 FOR TYPICAL COMPOSITE BEAM STUD SPACING DETAIL.
8. <X"> INDICATES UPWARD CAMBER AT MID SPAN.
9. D - X INDICATES SPAN DIRECTION OF DECK. REF. SCHEDULE 1/S6.5 FOR DECK INFORMATION.
10. EL. XXX'-XX" INDICATES TOP OF SLAB ELEVATION.
11. EL. XXX'-XX" B.O.D. INDICATES BOTTOM OF DECK ELEVATION.
12. INDICATES MOMENT CONNECTION. REF. 1/S6.3 FOR DETAILS.
13. INDICATES SFRS COLLECTOR CONNECTION. REF. S3.11 FOR DETAILS.
14. INDICATES DIAGONAL BRACING AT WF BEAM. REF. S3.12.
15. X INDICATES BEAM PENETRATION. REF. SCHEDULE, 4/S6.3, AND 5/S6.3.
16. REF. SHEET S6.7 FOR TYPICAL DECK REINFORCING AT OPENINGS.
17. (A) INDICATES ABOVE.
18. (B) INDICATES BELOW
19. (E) INDICATES EXISTING.
20. INDICATES COLUMN BELOW. REF. DETAIL 7/S6.1 FOR BEAM OVER COL. DETAIL
21. X PSF / L INDICATES EXTENT AND MAXIMUM VALUE OF DRIFTING SNOW LOAD DRIFT IS IN ADDITION TO A BALANCED SNOW LOAD OF 11 PSF.
22. XXX INDICATES MEMBER PART OF SEISMIC FORCE RESISTING SYSTEM (SFRS). REF. GENERAL STRUCTURAL NOTES, SPECIFICATIONS, AND DETAILS FOR REQUIREMENTS.
23. REFERENCE ARCHITECTURAL, MECHANICAL AND ELECTRICAL DRAWINGS FOR DUCTS, CONDUITS, SLEEVES, BLOCKOUTS AND OTHER ITEMS TO BE COORDINATED WITH THE STRUCTURAL DRAWINGS.
24. REFERNCE S6.10 FOR ROOF TIE-OFF DETAILS. REFERENCE ARCHITECTURAL DRAWINGS FOR LOCATIONS.

NOTES CONT'D:

25. XXX (YYY,ZZZ) INDICATES XX" DEEP K SERIES OPEN WEB JOIST WITH A TOTAL UNIFORM DEAD LOAD PLUS SNOW LOAD OF YYY PLF AND A UNIFORM SNOW LOAD OF ZZZ PLF (SERVICE LEVEL). REF. PLAN FOR ADDITIONAL LOADS. LH OR DLH WHERE OCCURS.
26. X.XKD / X.XKL / XK INDICATES ADDITIONAL VERTICAL LOAD IN KIPS (SERVICE LEVEL) TO TOP CHORD OF OWJ. "D" INDICATES DEAD LOAD. "L" INDICATES LIVE LOAD AND "E" INDICATES SEISMIC LOAD. "W" INDICATES WIND LOAD.
27. INDICATES AXIAL TENSION OR COMPRESSION LOAD IN KIPS (SERVICE LEVEL) IN TOP CHORD OF JOIST DUE TO WIND OR SEISMIC LOADS.
28. LOADS BEYOND WHAT ARE SHOWN ON THE PLANS SHALL NOT BE APPLIED TO OPEN WEB JOISTS OR GIRDERS WITHOUT WRITTEN PERMISSION FROM THE ENGINEER OF RECORD.
29. DO NOT WELD TO OPEN WEB JOISTS EXCEPT AS SHOWN IN DETAILS OR AS APPROVED BY THE ENGINEER OF RECORD.

KEY PLAN

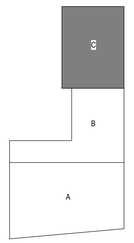

BID/PERMIT SET

kpff
STRUCTURAL ENGINEER
REGISTERED PROFESSIONAL ENGINEER
15773
OREGON
JAN. 21, 1983
GERALD L. ABDILLA
EXPIRES 12-31-19

FRAMING PLAN, ROOF - AREA C
ACMA
BEAVERTON SCHOOL DISTRICT

S1.3C
74-18109-00
03/14/2019
REVISIONS

DLR Group
Architecture Engineering Planning Interiors

© , DLR Group Architecture & Engineering Inc., an Oregon corporation, ALL RIGHTS RESERVED

C:\Users\brad\Documents\10021800772_bradfrench3417.rvt
3/13/2019 2:51:57 PM

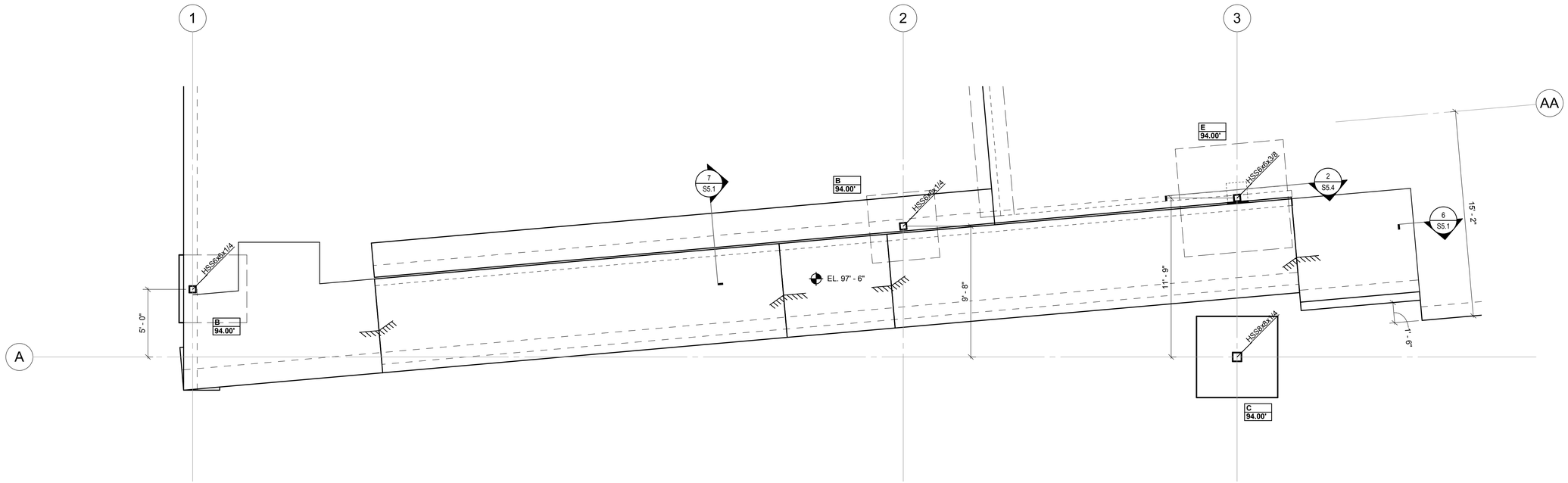

1 PARTIAL FOUNDATION PLAN AT RAMP ALTERNATE

1/4" = 1'-0"

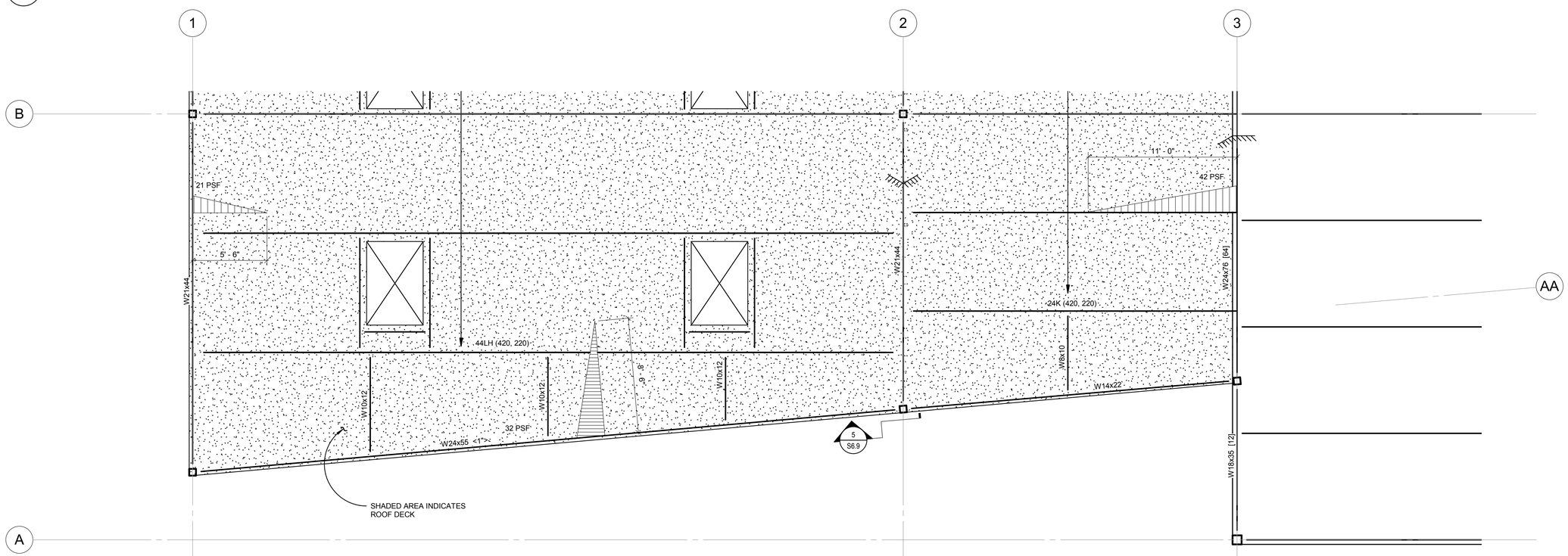

2 PARTIAL PLAN AT RAMP ALTERNATE

1/4" = 1'-0"

BID/PERMIT SET

kpff

REGISTERED PROFESSIONAL ENGINEER
15773
OREGON
JAN. 21, 1983
JERALD L. ABDIE
EXPIRES 12-31-19

RAMP DEDUCTIVE ALTERNATE
ACMA
BEAVERTON SCHOOL DISTRICT

S2.1
74-18109-00
03/14/2019
REVISIONS

DLR Group
Architecture Engineering Planning Interiors

© DLR Group Architecture & Engineering Inc., an Oregon corporation, ALL RIGHTS RESERVED

C:\Users\brad\Documents\100218007 72_bradfrench3417.rvt
3/13/2019 2:51:58 PM

BUCKLING RESTRAINED BRACED FRAME ELEVATION NOTES:

1. BRB-(YxY) INDICATES BRB WITH MAXIMUM CASING SIZE YxY INCHES.
2. REF. PLANS FOR TOP OF STEEL OR DECK ELEVATIONS.
3. [XX] INDICATES NUMBER OF 3/4"Øx4 1/2" HEADED STUDS EVENLY DISTRIBUTED ALONG BEAM, REF. SHEET S6.5 FOR TYPICAL COMPOSITE BEAM STUD SPACING DETAILS.
4. ALL BEAMS, COLUMNS, BRACES AND CONNECTIONS WITHIN EACH FRAME ARE PART OF THE SFRS. REF. GENERAL STRUCTURAL NOTES AND SPECIFICATIONS.
5. WELDED, BOLTED, SCREWED, OR SHOT-IN-ATTACHMENTS FOR ELEMENTS THAT ARE NOT PART OF THE SLRS ARE NOT PERMITTED IN THE PROTECTED ZONE. THE PROTECTED ZONE INCLUDES THE STEEL BRB CORE AND ELEMENTS THAT CONNECT THE STEEL BRB CORE TO THE BEAMS AND COLUMNS. REF. DETAIL 5/S3.11.
6. Asc INDICATES STEEL CORE AREA
7. DESIGN OF BUCKLING RESTRAINED BRACE (BRB) MEMBERS, INCLUDING CONNECTIONS AND GUSSET PLATES, IS TO BE BIDDER DESIGNED. REF. SPECIFICATIONS. BRB DESIGNER SHALL CHECK LOCAL STRESS EFFECTS ON BEAMS AND COLUMNS AT GUSSET PLATE CONNECTIONS AND SPECIFY ALL REQUIRED STIFFENERS, DOUBLER PLATES OR OTHER REQUIRED STRENGTHENING.
8. STEEL CORE YIELD STRENGTH, Fy = 42 KSI (±4 KSI), COUPON TEST REQUIRED. REF. SPECIFICATIONS.
9. ALL WORK POINTS ARE LOCATED AT THE INTERSECTION OF THE GEOMETRIC CENTERS OF ALL MEMBERS (COLUMNS, BEAM AND DIAGONALS), U.N.O. THE LOWER LEVEL WORK POINT IS LOCATED AT BOTTOM OF THE BASE PLATES.
10. DIMENSION ON BRACE INDICATES MAXIMUM CASING WIDTH (OUT TO OUT)
11. ⟨X⟩ VALUES DETERMINED FROM QUALIFICATION TESTS SHALL NOT EXCEED THE FOLLOWING VALUES:
    - COMPRESSION STRENGTH ADJUSTMENT FACTOR, ß = 1.15
    - STRAIN HARDENING ADJUSTMENT FACTOR, ω = 1.6
12. COORDINATE TOP OF STEEL ELEVATION WITH ARCHITECTURAL DRAWINGS.
13. XB INDICATES BEAM CONNECTION. REF. SHEET S3.11.
14. DL / LL INDICATES SERVICE DEAD AND LIVE LOAD REACTIONS PROVIDED FOR GUSSET PLATE DESIGNER.
15. HORIZONTAL DIAPHRAGM COLLECTOR FORCE PASSING THRU BEAM CONNECTION INCLUDES OVER STRENGTH FACTOR.

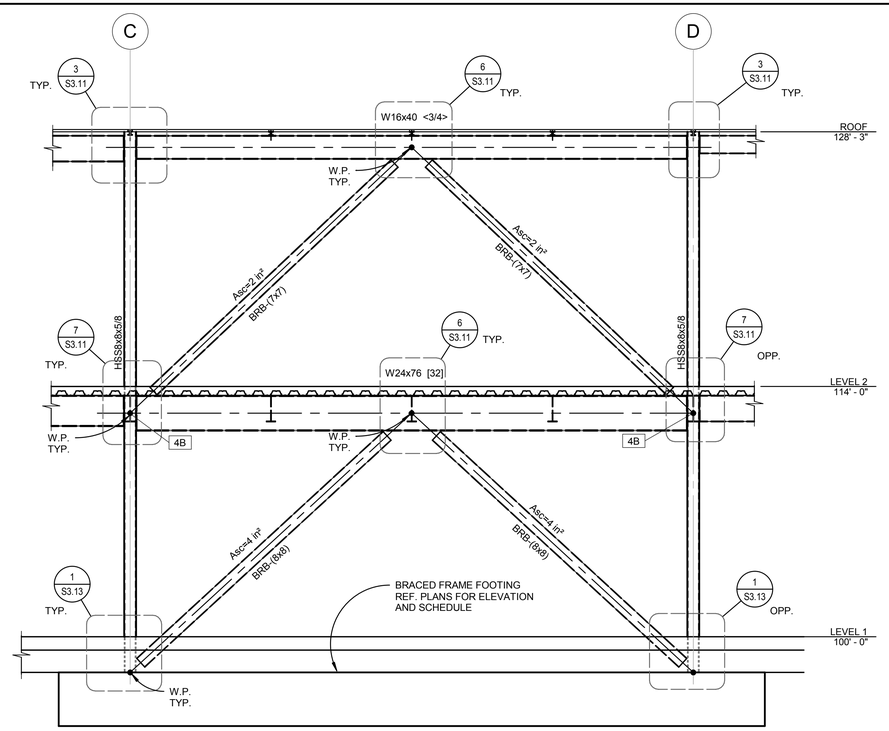

C BRACED FRAME ELEVATION GRID 7
1/4" = 1'-0"

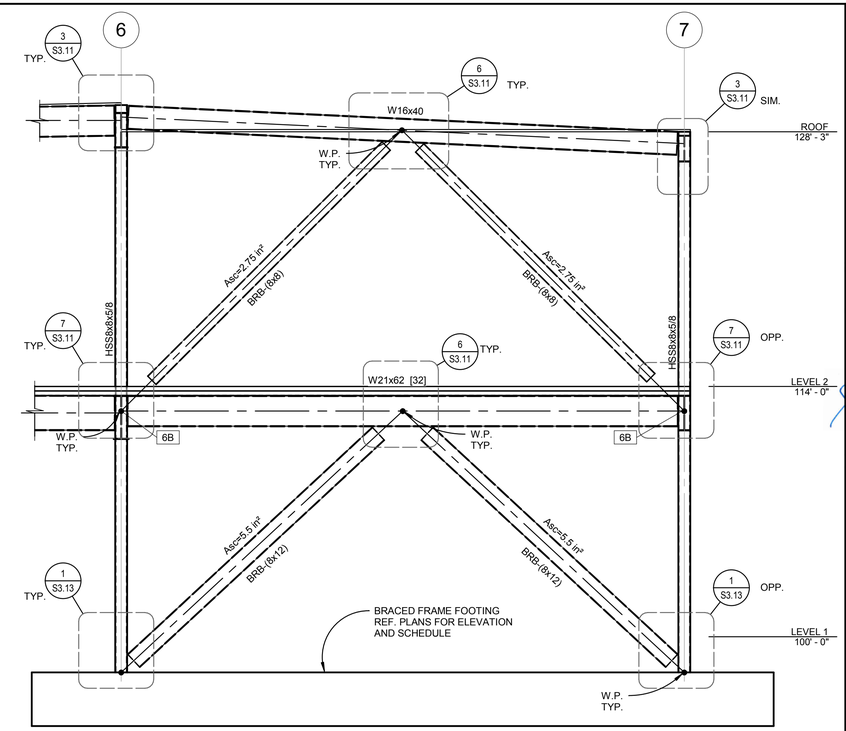

A BRACED FRAME ELEVATION GRID A
1/4" = 1'-0"

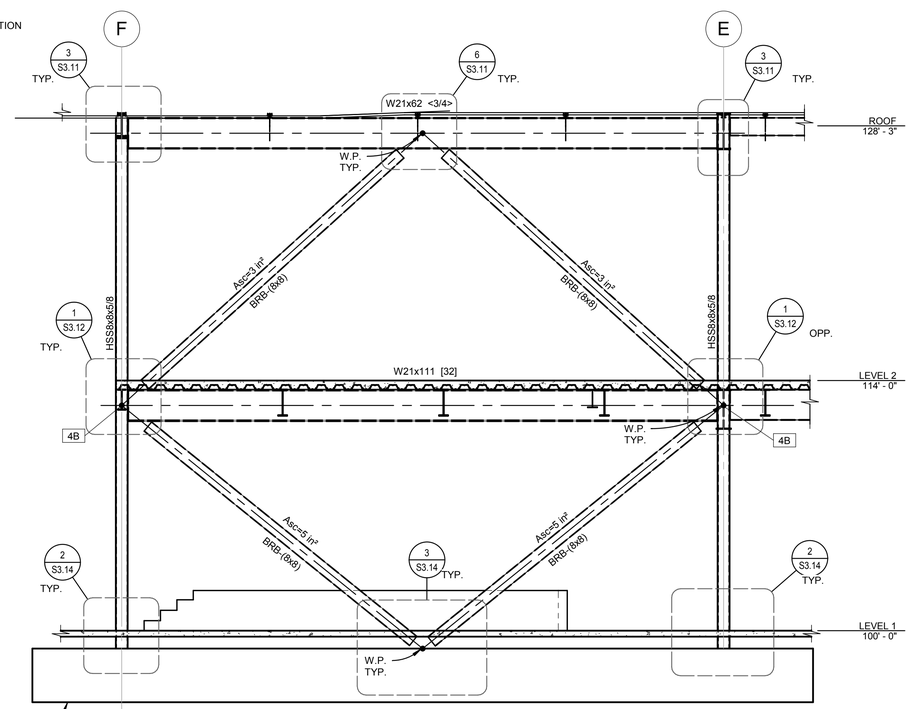

D BRACED FRAME ELEVATION GRID 4
1/4" = 1'-0"

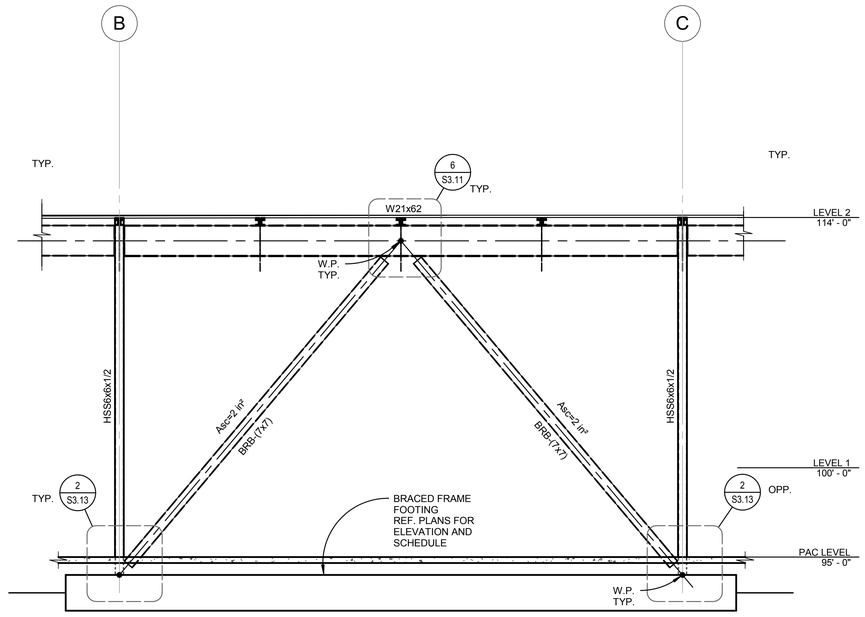

B BRACED FRAME ELEVATION GRID 1
1/4" = 1'-0"

BID/PERMIT SET

kpff

REGISTERED PROFESSIONAL ENGINEER
15773
OREGON
JAN. 21, 1983
GERALD L. ABBITT
EXPIRES 12-31-19

BRACED FRAME ELEVATIONS
ACMA
BEAVERTON SCHOOL DISTRICT

S3.1
74-18109-00
03/14/2019
REVISIONS

DLR Group
Architecture Engineering Planning Interiors

© DLR Group Architecture & Engineering Inc., an Oregon corporation, ALL RIGHTS RESERVED

C:\Users\brad\Documents\10021800772_bradfrench3417.rvt
3/13/2019 2:52:02 PM

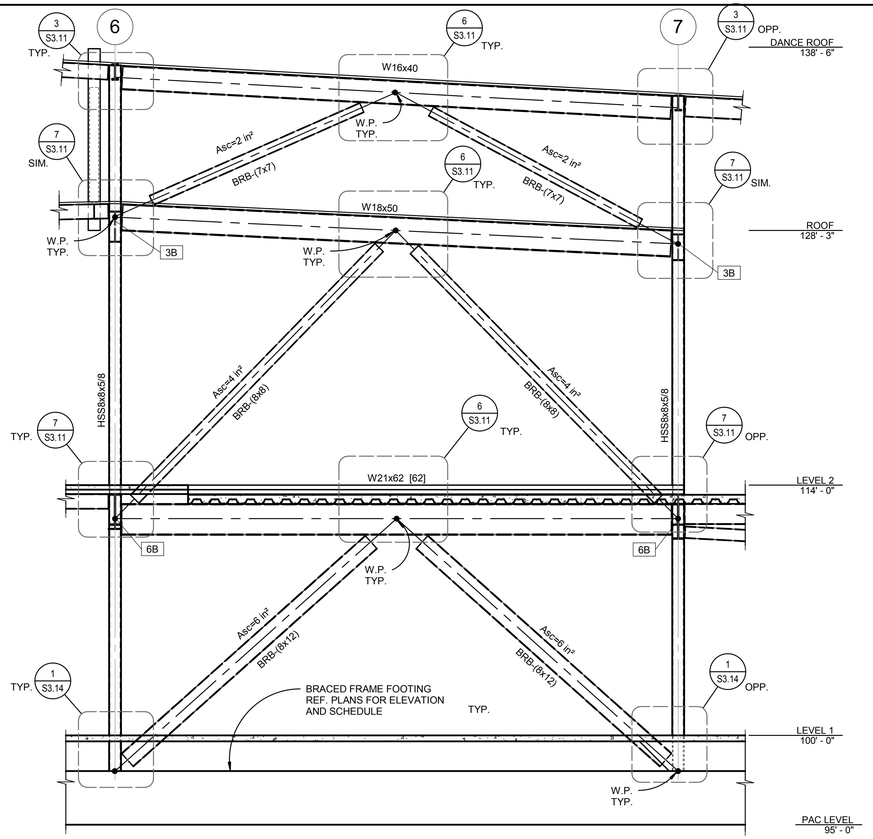

G BRACED FRAME ELEVATION GRID J

1/4" = 1'-0"

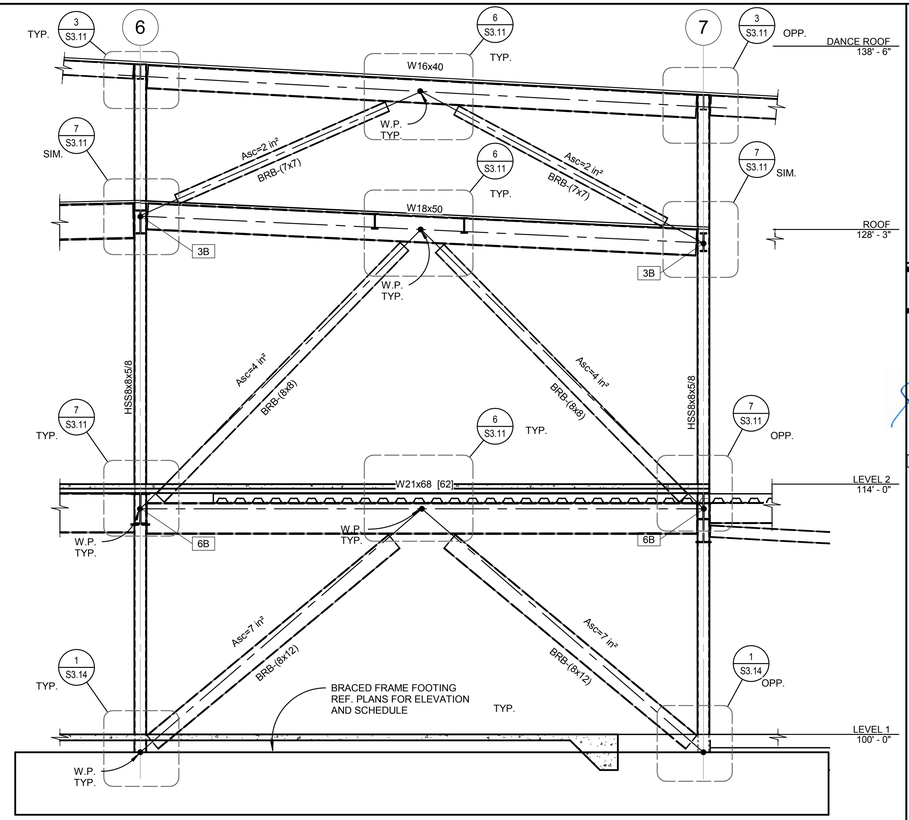

E BRACED FRAME ELEVATION GRID E

1/4" = 1'-0"

BUCKLING RESTRAINED BRACED FRAME ELEVATION NOTES:

1. BRB-(YxY) — INDICATES BRB WITH MAXIMUM CASING SIZE YxY INCHES.
2. REF. PLANS FOR TOP OF STEEL OR DECK ELEVATIONS.
3. [XX] — INDICATES NUMBER OF 3/4"Ø x4 1/2" HEADED STUDS EVENLY DISTRIBUTED ALONG BEAM, REF. SHEET S6.5 FOR TYPICAL COMPOSITE BEAM STUD SPACING DETAILS.
4. ALL BEAMS, COLUMNS, BRACES AND CONNECTIONS WITHIN EACH FRAME ARE PART OF THE SFRS. REF. GENERAL STRUCTURAL NOTES AND SPECIFICATIONS.
5. WELDED, BOLTED, SCREWED, OR SHOT-IN-ATTACHMENTS FOR ELEMENTS THAT ARE NOT PART OF THE SLRS ARE NOT PERMITTED IN THE PROTECTED ZONE. THE PROTECTED ZONE INCLUDES THE STEEL BRB CORE AND ELEMENTS THAT CONNECT THE STEEL BRB CORE TO THE BEAMS AND COLUMNS. REF. DETAIL 5/S3.11.
6. Asc — INDICATES STEEL CORE AREA
7. DESIGN OF BUCKLING RESTRAINED BRACE (BRB) MEMBERS, INCLUDING CONNECTIONS AND GUSSET PLATES, IS TO BE BIDDER DESIGNED. REF. SPECIFICATIONS. BRB DESIGNER SHALL CHECK LOCAL STRESS EFFECTS ON BEAMS AND COLUMNS AT GUSSET PLATE CONNECTIONS AND SPECIFY ALL REQUIRED STIFFENERS, DOUBLER PLATES OR OTHER REQUIRED STRENGTHENING.
8. STEEL CORE YIELD STRENGTH, Fy = 42 KSI (±4 KSI), COUPON TEST REQUIRED. REF. SPECIFICATIONS.
9. ALL WORK POINTS ARE LOCATED AT THE INTERSECTION OF THE GEOMETRIC CENTERS OF ALL MEMBERS (COLUMNS, BEAM AND DIAGONALS), U.N.O. THE LOWER LEVEL WORK POINT IS LOCATED AT BOTTOM OF THE BASE PLATES.
10. DIMENSION ON BRACE INDICATES MAXIMUM CASING WIDTH (OUT TO OUT)
11. ◇X — VALUES DETERMINED FROM QUALIFICATION TESTS SHALL NOT EXCEED THE FOLLOWING VALUES:
    - COMPRESSION STRENGTH ADJUSTMENT FACTOR, ß = 1.15
    - STRAIN HARDENING ADJUSTMENT FACTOR, ω = 1.6
12. COORDINATE TOP OF STEEL ELEVATION WITH ARCHITECTURAL DRAWINGS.
13. [XB] — INDICATES BEAM CONNECTION. REF. SHEET S3.11.
14. DL / LL — INDICATES SERVICE DEAD AND LIVE LOAD REACTIONS PROVIDED FOR GUSSET PLATE DESIGNER.
15. HORIZONTAL DIAPHRAGM COLLECTOR FORCE PASSING THRU BEAM CONNECTION INCLUDES OVER STRENGTH FACTOR.

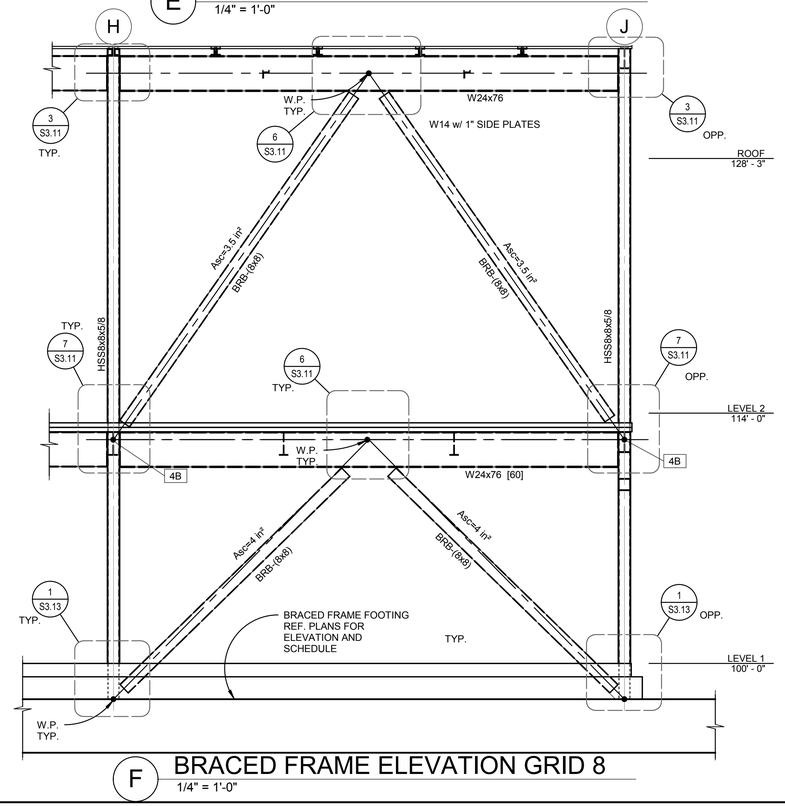

F BRACED FRAME ELEVATION GRID 8

1/4" = 1'-0"

BID/PERMIT SET

kpff

STRUCTURAL REGISTERED PROFESSIONAL ENGINEER 15773 OREGON JAN. 21, 1983 GERALD L ABDIE

EXPIRES 12-31-19

BRACED FRAME ELEVATIONS
ACMA
BEAVERTON SCHOOL DISTRICT

S3.2
74-18109-00
03/14/2019
REVISIONS

DLR Group
Architecture Engineering Planning Interiors

© , DLR Group Architecture & Engineering Inc., an Oregon corporation, ALL RIGHTS RESERVED

C:\Users\brad\Documents\10021800772_bradfrench3417.rvt
3/13/2019 2:52:03 PM

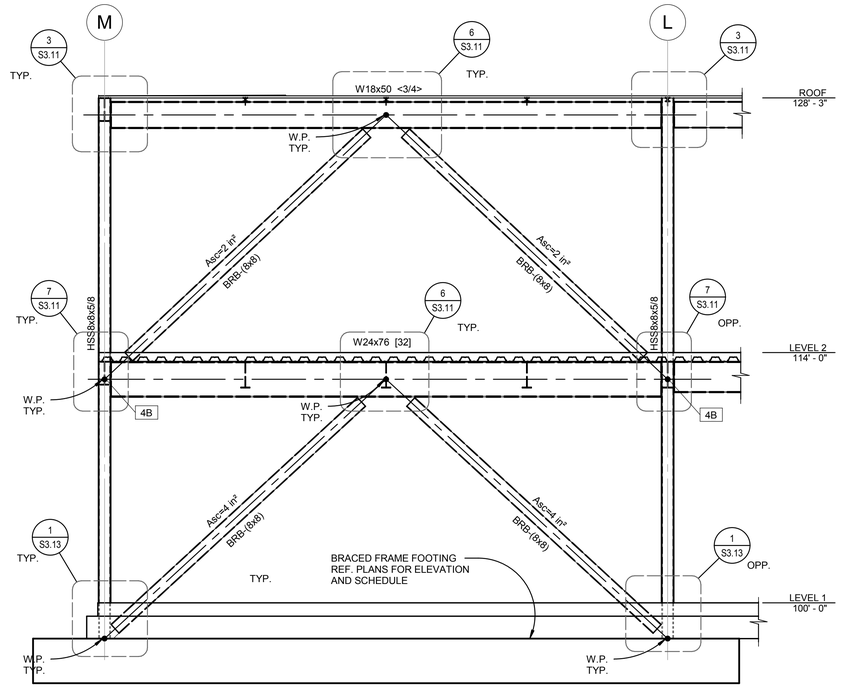

K BRACED FRAME ELEVATION GRID 3
1/4" = 1'-0"

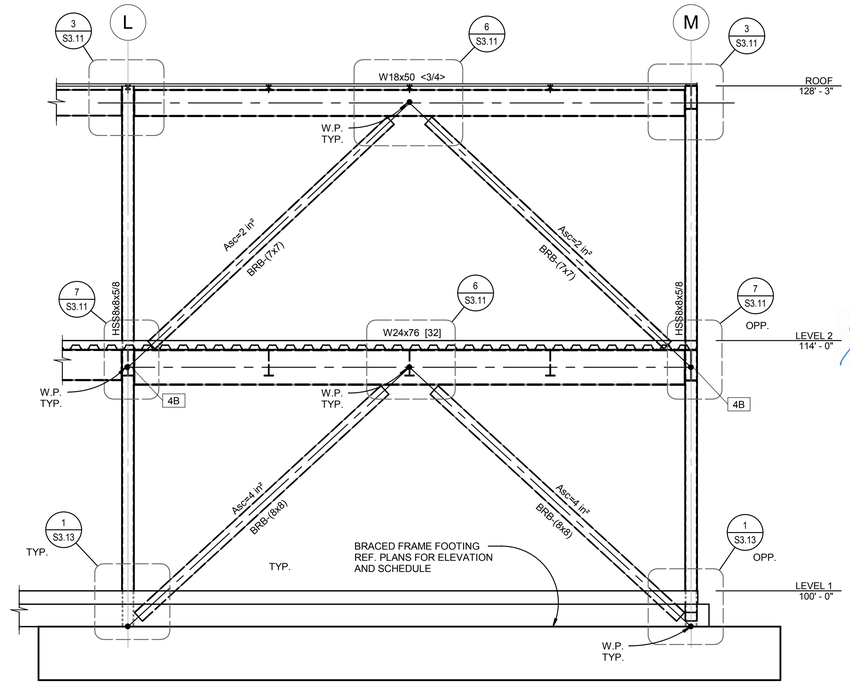

H BRACED FRAME ELEVATION GRID 7
1/4" = 1'-0"

BUCKLING RESTRAINED BRACED FRAME ELEVATION NOTES:

1. BRB-(YxY) — INDICATES BRB WITH MAXIMUM CASING SIZE YxY INCHES.
2. REF. PLANS FOR TOP OF STEEL OR DECK ELEVATIONS.
3. [XX] — INDICATES NUMBER OF 3/4"Øx4 1/2" HEADED STUDS EVENLY DISTRIBUTED ALONG BEAM, REF. SHEET S6.5 FOR TYPICAL COMPOSITE BEAM STUD SPACING DETAILS.
4. ALL BEAMS, COLUMNS, BRACES AND CONNECTIONS WITHIN EACH FRAME ARE PART OF THE SFRS. REF. GENERAL STRUCTURAL NOTES AND SPECIFICATIONS.
5. WELDED, BOLTED, SCREWED, OR SHOT-IN-ATTACHMENTS FOR ELEMENTS THAT ARE NOT PART OF THE SLRS ARE NOT PERMITTED IN THE PROTECTED ZONE. THE PROTECTED ZONE INCLUDES THE STEEL BRB CORE AND ELEMENTS THAT CONNECT THE STEEL BRB CORE TO THE BEAMS AND COLUMNS. REF. DETAIL 5/S3.11.
6. Asc — INDICATES STEEL CORE AREA
7. DESIGN OF BUCKLING RESTRAINED BRACE (BRB) MEMBERS, INCLUDING CONNECTIONS AND GUSSET PLATES, IS TO BE BIDDER DESIGNED. REF. SPECIFICATIONS. BRB DESIGNER SHALL CHECK LOCAL STRESS EFFECTS ON BEAMS AND COLUMNS AT GUSSET PLATE CONNECTIONS AND SPECIFY ALL REQUIRED STIFFENERS, DOUBLER PLATES OR OTHER REQUIRED STRENGTHENING.
8. STEEL CORE YIELD STRENGTH, Fy = 42 KSI (±4 KSI), COUPON TEST REQUIRED. REF. SPECIFICATIONS.
9. ALL WORK POINTS ARE LOCATED AT THE INTERSECTION OF THE GEOMETRIC CENTERS OF ALL MEMBERS (COLUMNS, BEAM AND DIAGONALS), U.N.O. THE LOWER LEVEL WORK POINT IS LOCATED AT BOTTOM OF THE BASE PLATES.
10. DIMENSION ON BRACE INDICATES MAXIMUM CASING WIDTH (OUT TO OUT)
11. X — VALUES DETERMINED FROM QUALIFICATION TESTS SHALL NOT EXCEED THE FOLLOWING VALUES:
    - COMPRESSION STRENGTH ADJUSTMENT FACTOR, ß = 1.15
    - STRAIN HARDENING ADJUSTMENT FACTOR, ω = 1.6
12. COORDINATE TOP OF STEEL ELEVATION WITH ARCHITECTURAL DRAWINGS.
13. XB — INDICATES BEAM CONNECTION. REF. SHEET S3.11.
14. DL / LL — INDICATES SERVICE DEAD AND LIVE LOAD REACTIONS PROVIDED FOR GUSSET PLATE DESIGNER.
15. HORIZONTAL DIAPHRAGM COLLECTOR FORCE PASSING THRU BEAM CONNECTION INCLUDES OVER STRENGTH FACTOR.

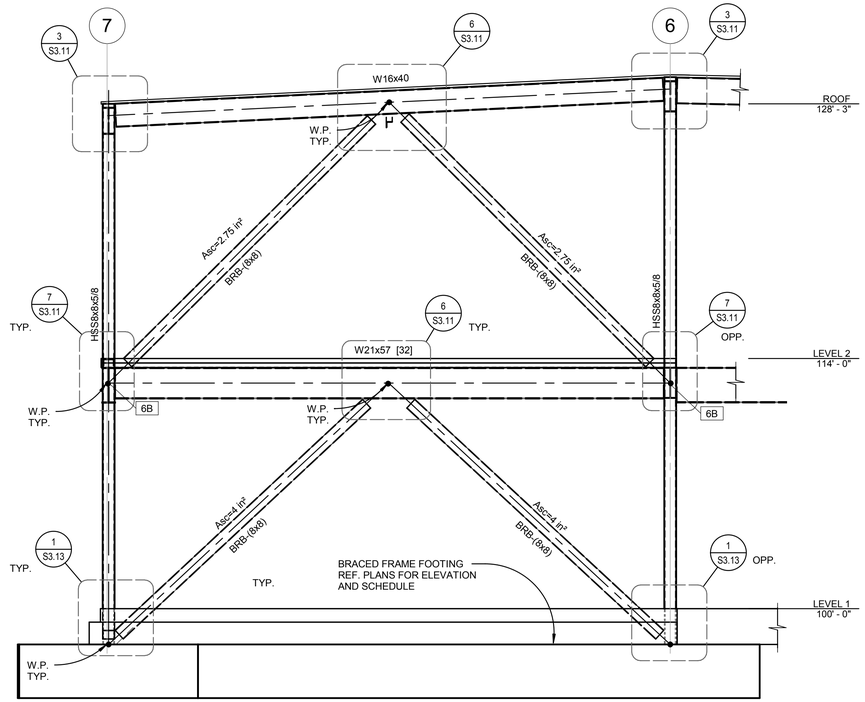

J BRACED FRAME ELEVATION GRID M
1/4" = 1'-0"

BID/PERMIT SET

kpff
STRUCTURAL ENGINEER
REGISTERED PROFESSIONAL ENGINEER
15773
OREGON
JAN. 21, 1983
GERALD L ABDIE
EXPIRES 12-31-19

BRACED FRAME ELEVATIONS
ACMA
BEAVERTON SCHOOL DISTRICT

S3.3
74-18109-00
03/14/2019
REVISIONS

DLR Group
Architecture Engineering Planning Interiors

© DLR Group Architecture & Engineering Inc., an Oregon corporation, ALL RIGHTS RESERVED

C:\Users\bradf\Documents\10021800772_bradfrench3417.rvt
3/13/2019 2:52:05 PM

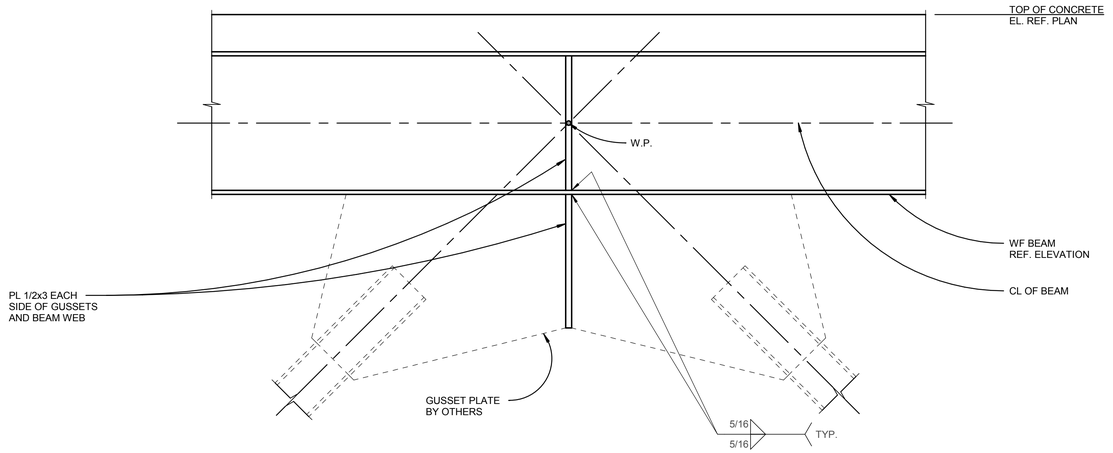

6 BRACED FRAME DETAIL
1" = 1'-0"

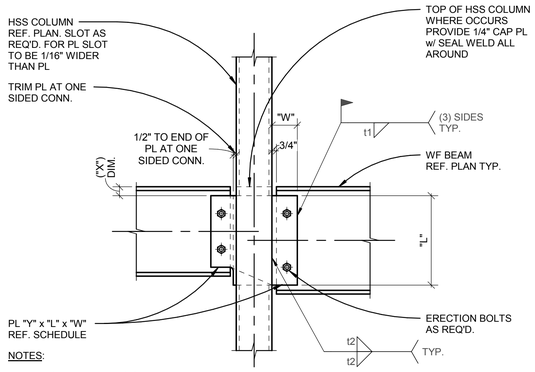

NOTES:
1. FOR ("X") DIMENSION REF. DETAIL 4/S6.01.
2. DESIGNATED ⊙— .
3. FOR SCHEDULE REF. 4/S3.11.
4. GR. 50 PL TYP.

3 COLLECTOR BEAM TO HSS COLUMN DETAIL
1" = 1'-0"

ALL MEMBERS AND CONNECTIONS ON THIS SHEET ARE PART OF THE SEISMIC FORCE RESISTING SYSTEM (SFRS). REFERENCE GENERAL STRUCTURAL NOTES, QUALITY ASSURANCE PLAN, AND SPECIFICATIONS FOR ADDITIONAL REQUIREMENTS

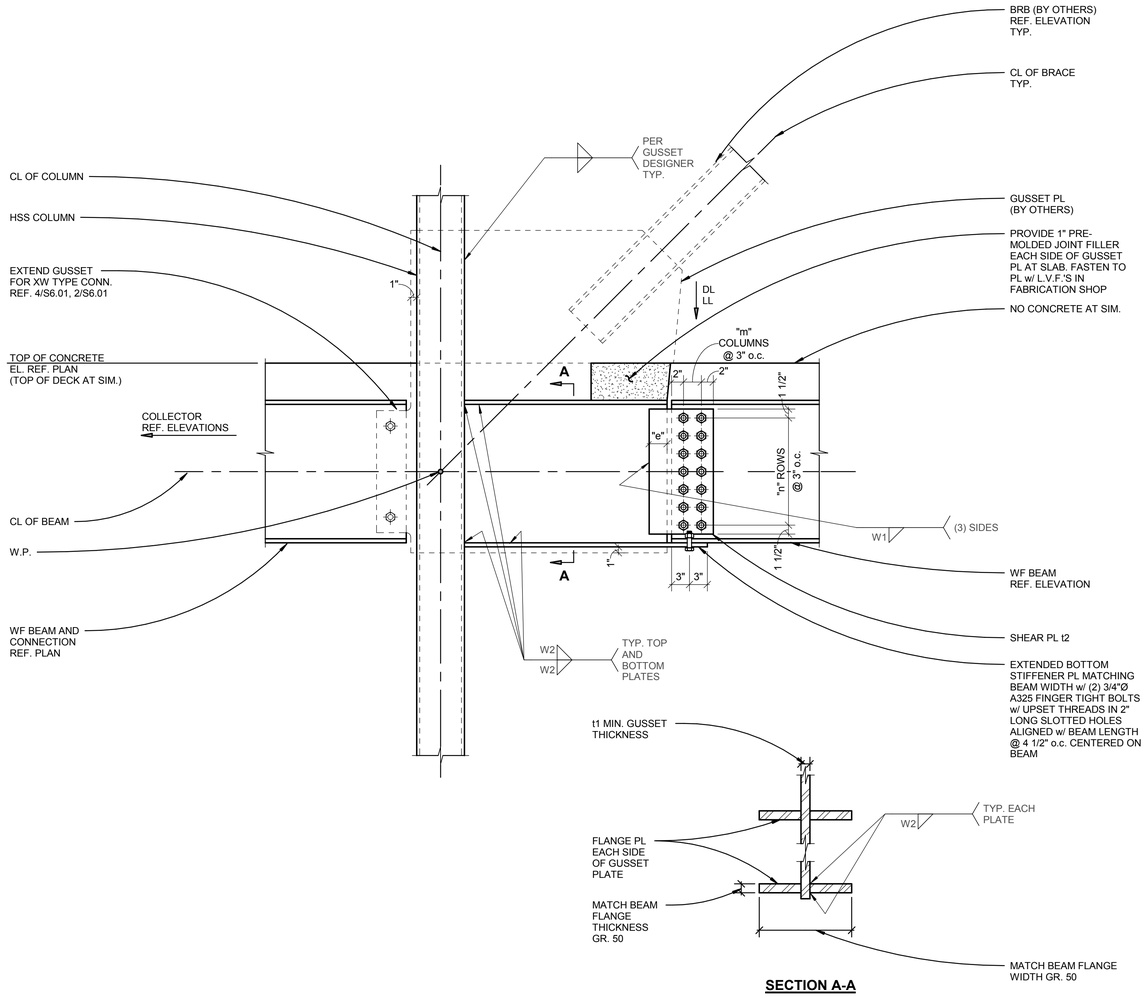

SECTION A-A

NOTE:
REF. SCHEDULE 1/S3.11
FOR MORE INFO.

7 BRACED FRAME DETAIL
1" = 1'-0"

WELDED TAB COLLECTOR SCHEDULE

BEAM DESIGNATION	PLATE LENGTH "L"	PLATE WIDTH "W"	WELD t1	WELD t2	PLATE THICKNESS "Y"
W10x26	6	4	1/4	1/4	3/8
W14x48	9	4	5/16	5/16	3/8
W16x31	12	4	5/16	5/16	3/8
W16x40	12	5	3/8	3/8	1/2
W18x50	14	4	5/16	5/16	3/8
W21x50	17	4	5/16	5/16	3/8
W21x62	17	4	5/16	5/16	3/8
W21x68	17	4	5/16	5/16	3/8
W21x93	17	4	5/16	5/16	3/8
W24x55	21	4	5/16	5/16	3/8
W24x74	21	4	5/16	5/16	3/8

4 WELDED TAB COLLECTOR SCHEDULE
1" = 1'-0"

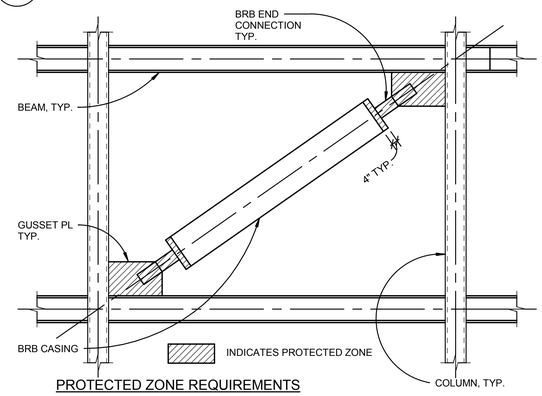

PROTECTED ZONE REQUIREMENTS

(1) WITHIN THE PROTECTED ZONE, DISCONTINUITIES CREATED BY FABRICATION OR ERECTION OPERATIONS, SUCH AS TACK WELDS, ERECTION AIDS, AIR-ARC GOUGING AND THERMAL CUTTING SHALL BE REPAIRED AS REQUIRED BY ENGINEER OF RECORD.

(2) WELDED, BOLTED, SCREWED OR SHOT-IN ATTACHMENTS FOR PERIMETER EDGE ANGLES, EXTERIOR FACADES, PARTITIONS, DUCK WORK, PIPING OR OTHER CONSTRUCTION SHALL NOT BE PLACED WITHIN THE PROTECTED ZONE.

5 PROTECTED ZONE REQ'MTS AT BUCKLING RESTRAINED BRACED FRAMES
1/4" = 1'-0"

BRB SHEAR PLATE SCHEDULE

CONN. TYPE	NO. OF A490 SC BOLTS			MIN. GUSSET THICKNESS	SHEAR PL		WELDS	
	DIA.	"n" ROWS	"m" ROWS	t_1	t_2	e	w_1	w_2
1B	1"	6	3	1/2"	5/8"	8"	1/2"	3/8"
2B	1"	6	3	3/8"	1/2"	8"	7/16"	5/16"
3B	1"	5	2	5/16"	3/8"	6"	5/16"	5/16"
4B	1 1/4"	7	4	1/2"	3/4"	10"	5/8"	3/8"
5B	1"	6	2	5/16"	1/2"	5"	3/8"	5/16"
6B	1 1/4"	6	3	1/2"	5/8"	10"	1/2"	3/8"

NOTES:
1. REFERENCE DETAILS 7/S3.11 AND 1/S3.12.
2. ALL STEEL PL FY=50 KSI.

1 TYP. BRB SHEAR PLATE SCHEDULE
1" = 1'-0"

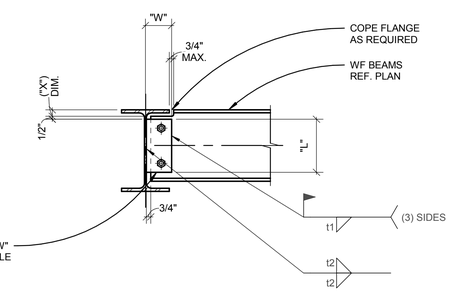

NOTES:
1. FOR ("X") DIMENSION REF. DETAIL 4/S6.01.
2. DESIGNATED ⊙— .
3. FOR SCHEDULE REF. 4/S3.11.

2 BEAM TO BEAM COLLECTOR CONNECTION
1" = 1'-0"

BID/PERMIT SET

kpff

STRUCTURAL ENGINEER
REGISTERED PROFESSIONAL
15773
OREGON
JAN. 21, 1983
GERALD L. ABDILE
EXPIRES 12-31-19

BRACED FRAME DETAILS
ACMA
BEAVERTON SCHOOL DISTRICT

S3.11
74-18109-00
03/14/2019
REVISIONS

DLR Group
Architecture Engineering Planning Interiors

© DLR Group Architecture & Engineering Inc., an Oregon corporation, ALL RIGHTS RESERVED

C:\Users\brad\Documents\18021800772_bradfrench3417.rvt
3/13/2019 2:52:07 PM

ALL MEMBERS AND CONNECTIONS ON THIS SHEET ARE PART OF THE SEISMIC FORCE RESISTING SYSTEM (SFRS). REFERENCE GENERAL STRUCTURAL NOTES, QUALITY ASSURANCE PLAN, AND SPECIFICATIONS FOR ADDITIONAL REQUIREMENTS

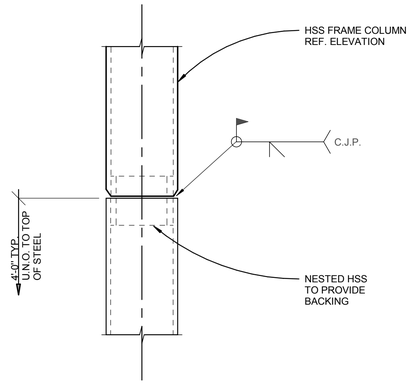

2 SFRS COLUMN SPLICE WHERE OCCURS
1 1/2" = 1'-0"

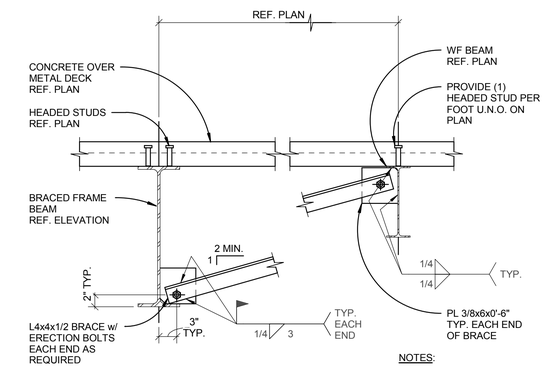

NOTES:

1. REF. FRAMING PLANS FOR BRACE LOCATIONS
2. SPACE ANGLE BRACES EQUALLY IN BAY UNLESS NOTED OTHERWISE ON PLAN.

3 TYP. DIAGONAL BRACING AT BRACED FRAME BM
1" = 1'-0"

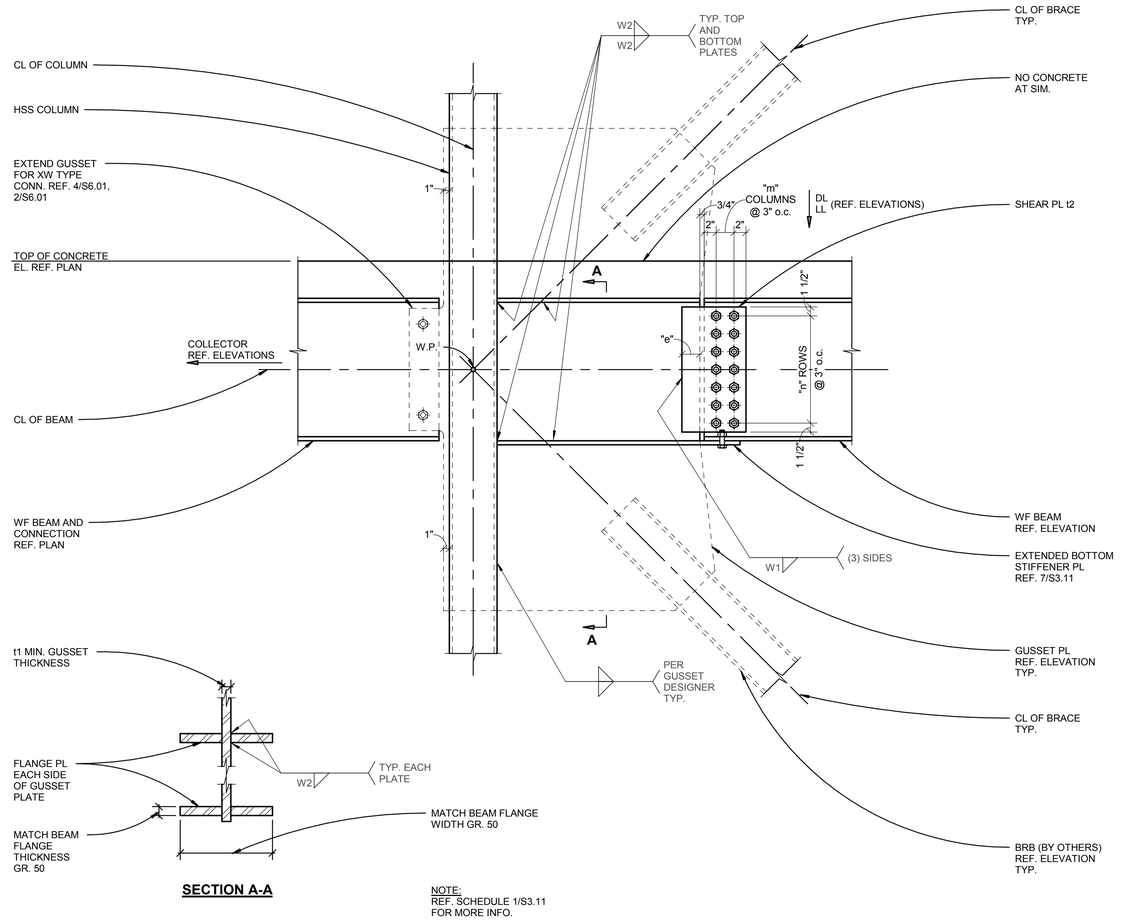

SECTION A-A

NOTE:
REF. SCHEDULE 1/S3.11
FOR MORE INFO.

1 BRACED FRAME DETAIL
1" = 1'-0"

BID/PERMIT SET

kpff

REGISTERED PROFESSIONAL ENGINEER
15773
OREGON
JAN. 21, 1983
GERALD L ABDIE

EXPIRES 12-31-19

BRACED FRAME DETAILS
ACMA
BEAVERTON SCHOOL DISTRICT

S3.12
74-18109-00
03/14/2019
REVISIONS

DLR Group
Architecture Engineering Planning Interiors

© . DLR Group Architecture & Engineering Inc., an Oregon corporation. ALL RIGHTS RESERVED

C:\Users\bradf\Documents\10021800772_bradfrench3417.rvt
3/13/2019 2:52:06 PM

ALL MEMBERS AND CONNECTIONS ON THIS SHEET ARE PART OF THE SEISMIC FORCE RESISTING SYSTEM (SFRS). REFERENCE GENERAL STRUCTURAL NOTES, QUALITY ASSURANCE PLAN, AND SPECIFICATIONS FOR ADDITIONAL REQUIREMENTS

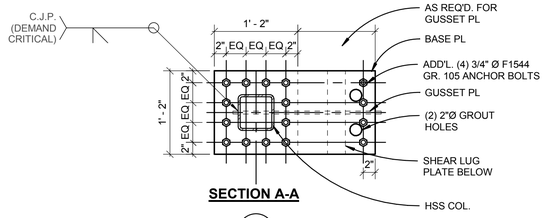

SECTION A-A

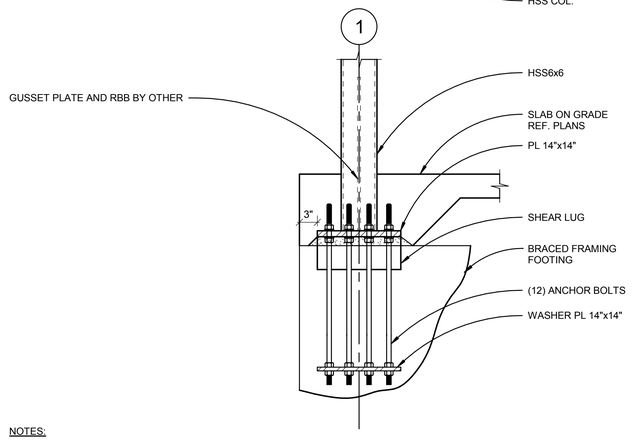

SECTION B-B

NOTES:

1. BASE PLATE TO BE GR. 50.
2. SHEAR LUG PLATE TO BE GR. 50.
3. ANCHOR BOLTS TO BE F1554 GR. 105.

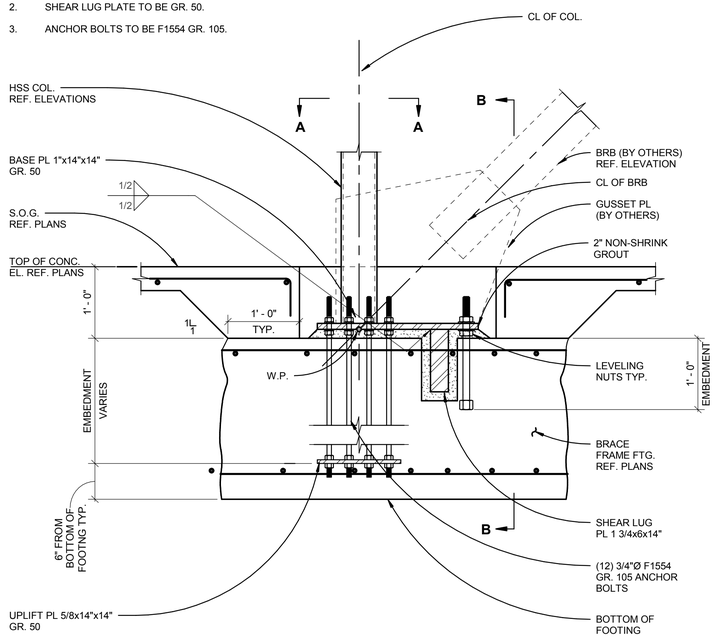

2 BRACED FRAME BASE PLATE DETAIL
1" = 1'-0"

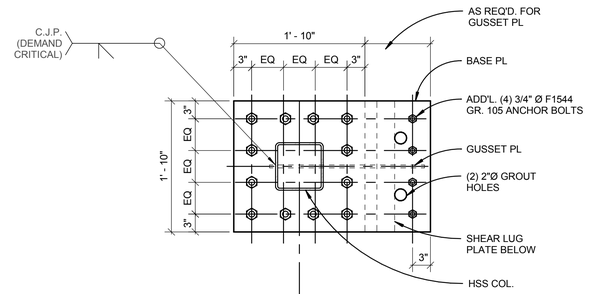

NOTES:

1. BASE PLATE TO BE GR. 50.
2. SHEAR LUG PLATE TO BE GR. 50.
3. ANCHOR BOLTS TO BE F1554 GR. 105.

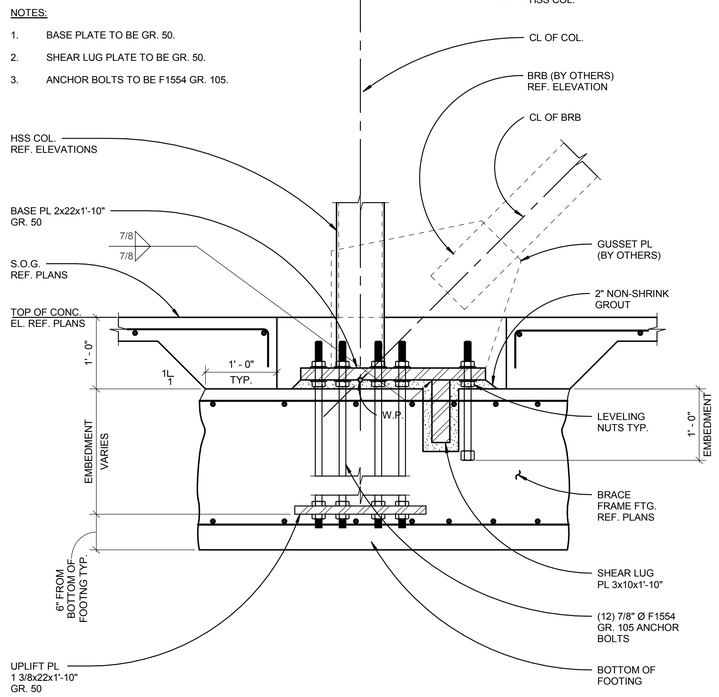

1 BRACED FRAME BASE PLATE DETAIL
1" = 1'-0"

BID/PERMIT SET

kpff

STRUCTURAL REGISTERED PROFESSIONAL ENGINEER 15773 OREGON JAN. 21, 1983 GERALD L. ABDIE

EXPIRES 12-31-19

BRACED FRAME DETAILS
ACMA
BEAVERTON SCHOOL DISTRICT

S3.13
74-18109-00
03/14/2019
REVISIONS

DLR Group
Architecture Engineering Planning Interiors

© DLR Group Architecture & Engineering Inc., an Oregon corporation, ALL RIGHTS RESERVED

C:\Users\brad\Documents\10021800772_bradfrench3417.rvt
3/13/2019 2:52:10 PM

ALL MEMBERS AND CONNECTIONS ON THIS SHEET ARE PART OF THE SEISMIC FORCE RESISTING SYSTEM (SFRS). REFERENCE GENERAL STRUCTURAL NOTES, QUALITY ASSURANCE PLAN, AND SPECIFICATIONS FOR ADDITIONAL REQUIREMENTS

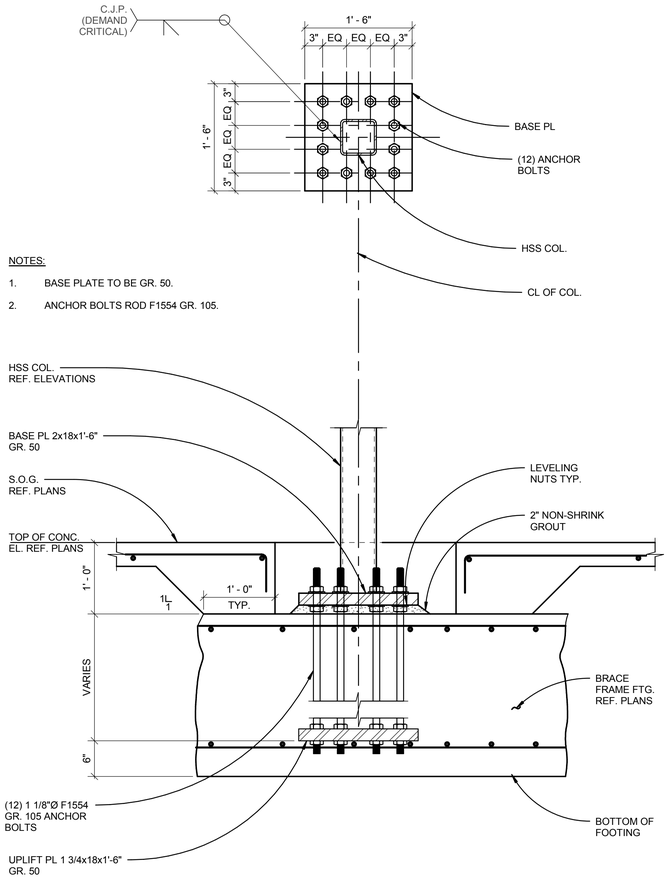

2 BRACED FRAME BASE PLATE DETAIL
1" = 1'-0"

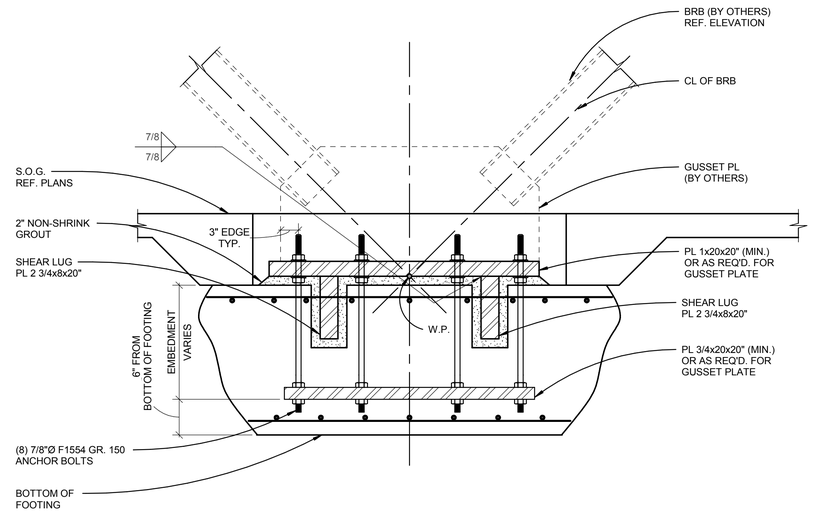

3 TYPICAL BRACED FRAME BASE PLATE DETAIL
1" = 1'-0"

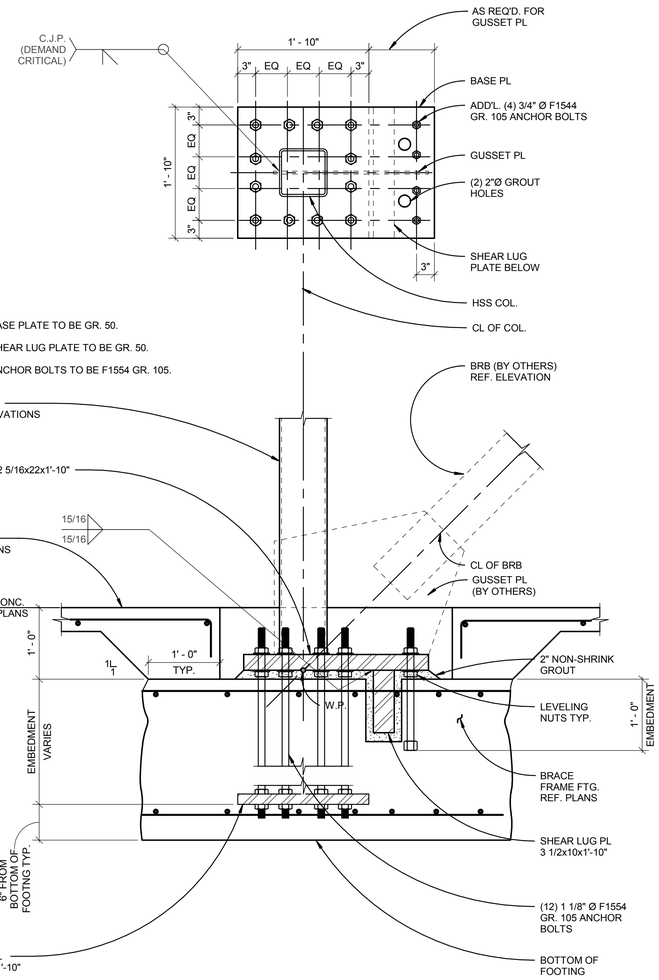

1 BRACED FRAME BASE PLATE DETAIL
1" = 1'-0"

BID/PERMIT SET

kpff

REGISTERED PROFESSIONAL ENGINEER
15,773
OREGON
JAN. 21, 1983
JERALD L. ABDILE

EXPIRES 12-31-19

BRACED FRAME DETAILS
ACMA
BEAVERTON SCHOOL DISTRICT

S3.14
74-18109-00
03/14/2019
REVISIONS

DLR Group
Architecture Engineering Planning Interiors

© . DLR Group Architecture & Engineering Inc., an Oregon corporation, ALL RIGHTS RESERVED

C:\1REVIT\10021800772_Courtney.Bradshaw@kpff.com.rvt
3/14/2019 9:07:39 AM

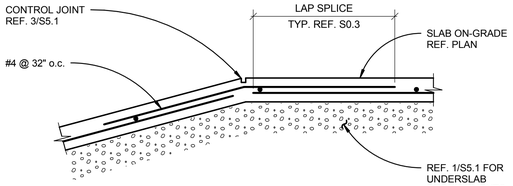

10 SLAB ON GRADE AT RAMP TRANSITION

1" = 1'-0"

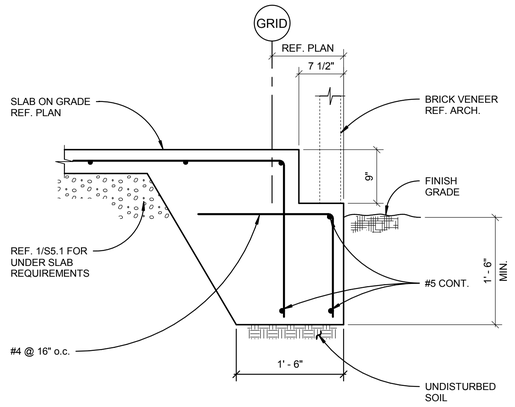

7 THICKENED SLAB ON GRADE EDGE DETAIL

1" = 1'-0"

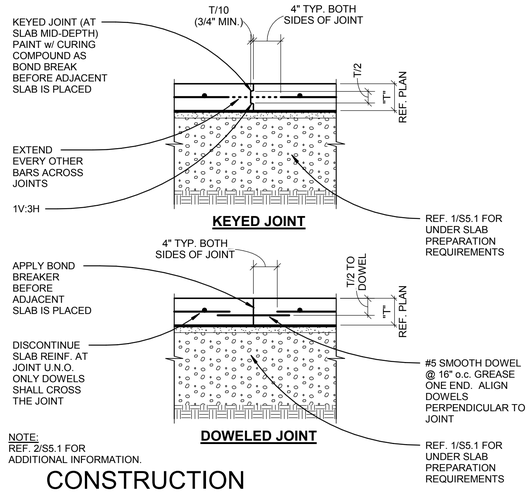

4 CONSTRUCTION JOINTS AT SLAB ON GRADE

1" = 1'-0"

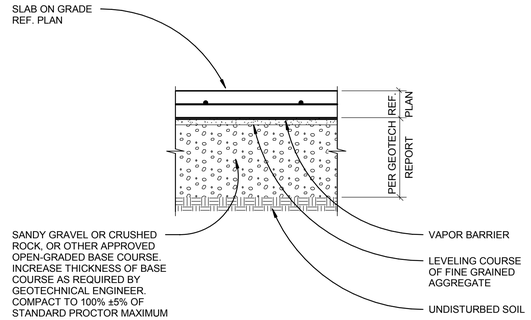

1 UNDER SLAB PREPARATION AT SLAB ON GRADE

1" = 1'-0"

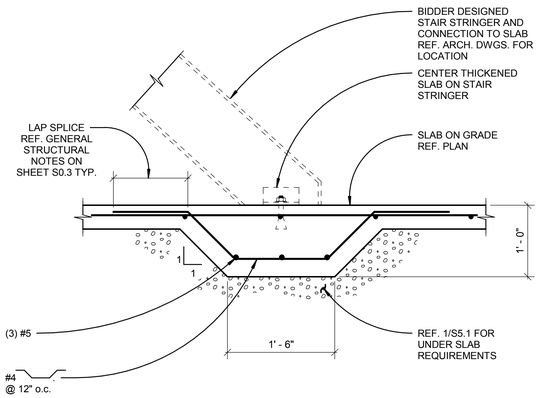

11 THICKENED SLAB AT STAIR STRINGER

1" = 1'-0"

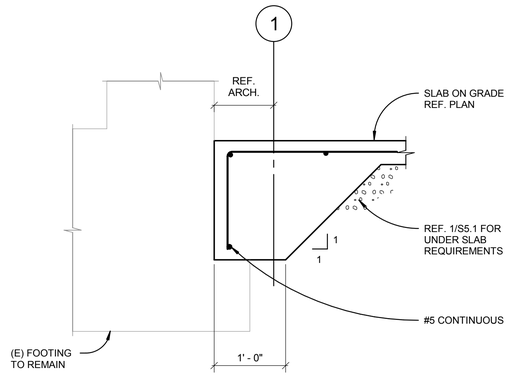

8 THICKENED SLAB AT (E) BUILDING

1" = 1'-0"

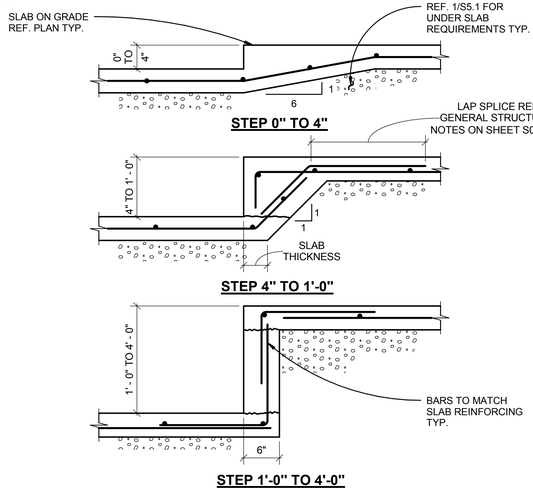

5 TYP. STEP IN SLAB ON GRADE DETAILS

1" = 1'-0"

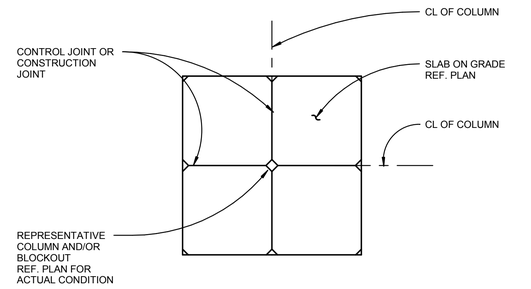

NOTES:

1. REF. PLAN FOR SLAB ON GRADE THICKNESS AND REINFORCEMENT.
2. CONTRACTOR SHALL SUBMIT SHOP DRAWINGS SHOWING JOINT LAYOUT FOR REVIEW AND APPROVAL BY ARCHITECT AND STRUCTURAL ENGINEER.
3. PROVIDE JOINTS ON ALL COLUMN LINES AND AT A MAXIMUM SPACING OF 12'-0" o.c. EACH WAY BETWEEN COLUMN LINES. PROVIDE JOINT AT ALL RE-ENTRANT CORNERS. REF. ARCHITECTURAL DRAWINGS FOR SPECIFIC JOINT LAYOUT.
4. SAWED JOINTS SHALL BE MADE AS SOON AS THE JOINT CAN BE CUT WITHOUT EDGES RAVELING AND WITHIN 12 HOURS OF SLAB PLACEMENT.

2 JOINTS AT SLAB ON GRADE

1" = 1'-0"

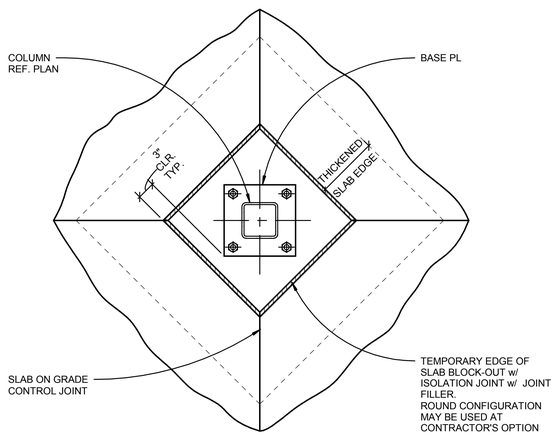

12 ISOLATION JOINT AT COLUMN

1" = 1'-0"

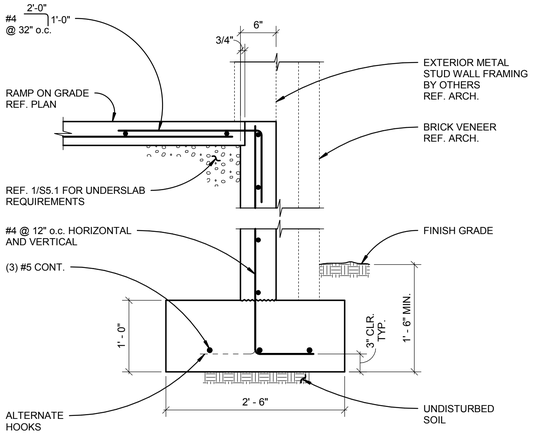

9 STEM WALL AT RAMP DETAIL

1" = 1'-0"

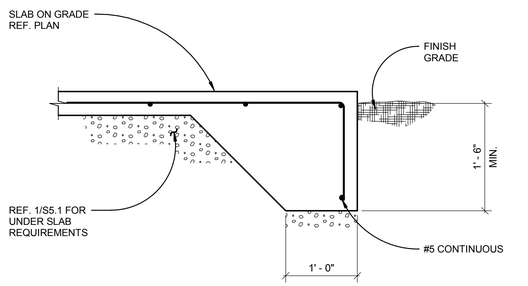

THICKENED SLAB ON GRADE EDGE DETAIL

1" = 1'-0"

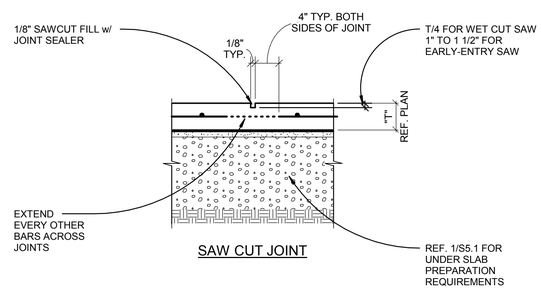

SAW CUT JOINT

NOTE:
REF. 2/S5.1 FOR ADDITIONAL INFORMATION.

3 CONTROL JOINTS IN SLAB ON GRADE

1" = 1'-0"

BID/PERMIT SET

kpff

STRUCTURAL REGISTERED PROFESSIONAL ENGINEER 15773 OREGON JAN. 21, 1983 GERALD L ABLE

EXPIRES 12-31-19

CONCRETE DETAILS
ACMA
BEAVERTON SCHOOL DISTRICT

S5.1
74-18109-00
03/14/2019
REVISIONS

DLR Group
Architecture Engineering Planning Interiors

© DLR Group Architecture & Engineering Inc., an Oregon corporation, ALL RIGHTS RESERVED

C:\Users\brad\Documents\10021800772_bradfrench3417.rvt
3/13/2019 2:52:13 PM

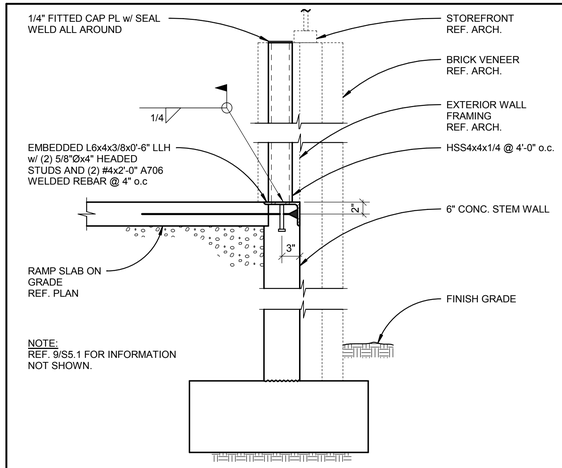

7 WINDOW SILL SUPPORT AT CONCRETE STEM WALL

1" = 1'-0"

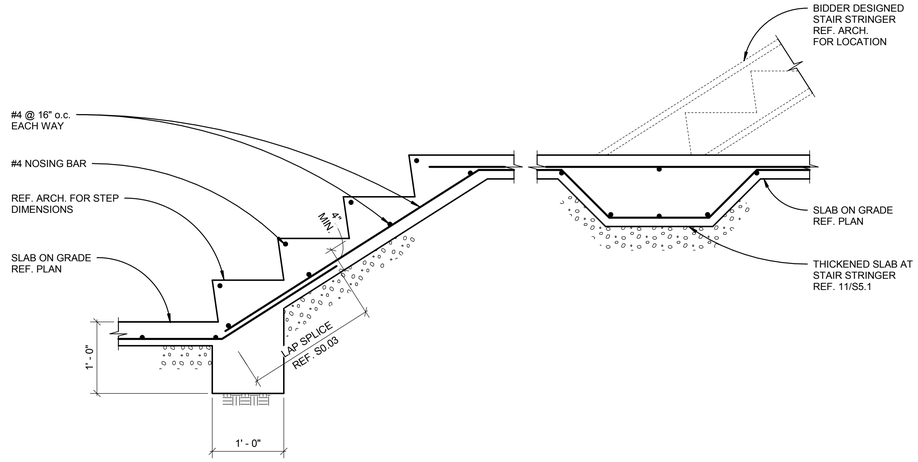

3 SOUTH STAIR AT GRADE

1" = 1'-0"

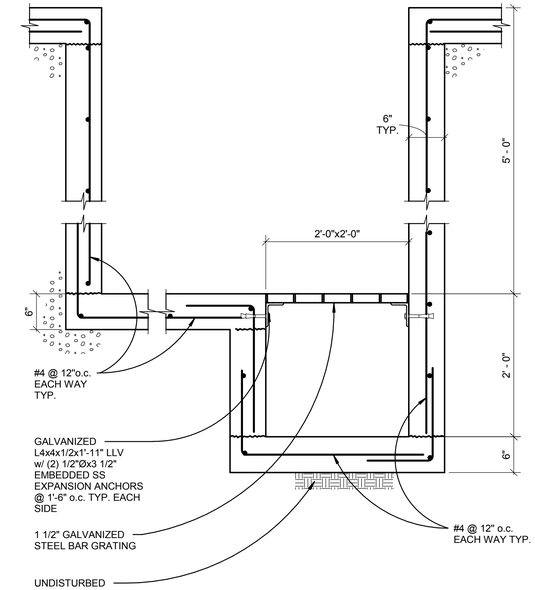

NOTES:

1. AT CONTRACTOR'S OPTION DRILL AND EPOXY w/ 3" EMBEDMENT IN LIEU OF DOWELS.

8 HOUSEKEEPING PAD AT SLAB ON GRADE

1" = 1'-0"

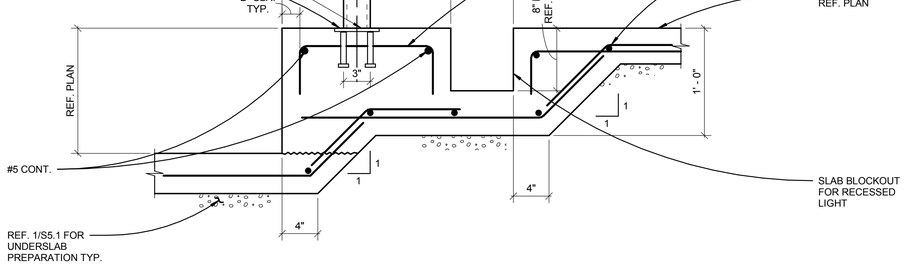

4 SLAB ON GRADE AT CENTRAL STAIR PLATFORM

1 1/2" = 1'-0"

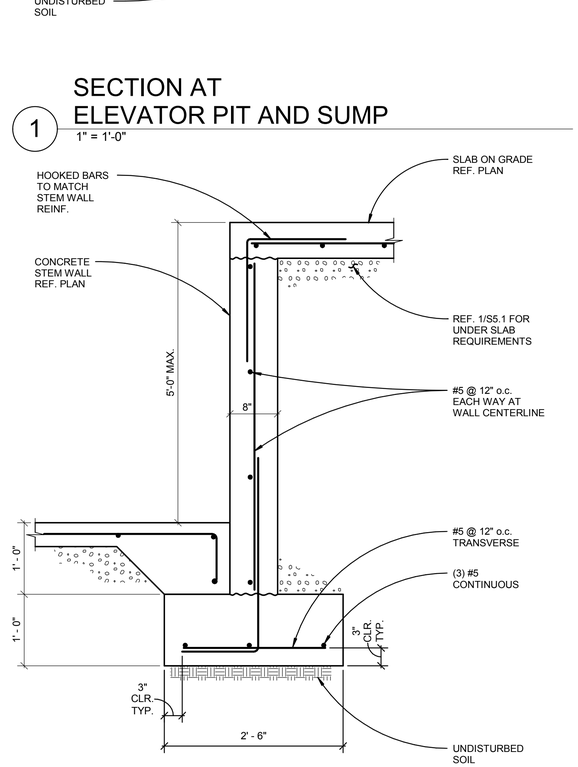

NOTES:

1. POUR LOWER SLAB PRIOR TO BACKFILL.
2. G.C. TO PROVIDE BRACING TOP OF STEM WALL UNTIL UPPER SLAB ON GRADE POURED.

1 SECTION AT ELEVATOR PIT AND SUMP

1" = 1'-0"

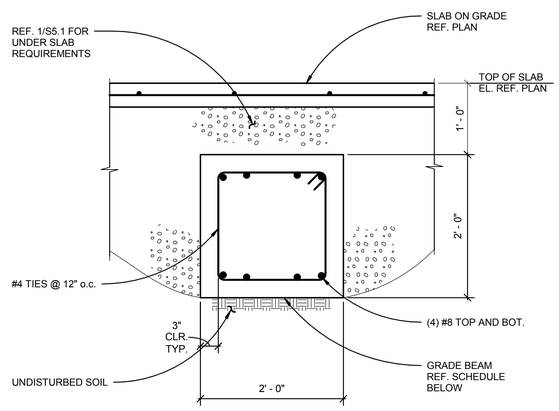

9 TYP. GRADE BEAM DETAIL

1" = 1'-0"

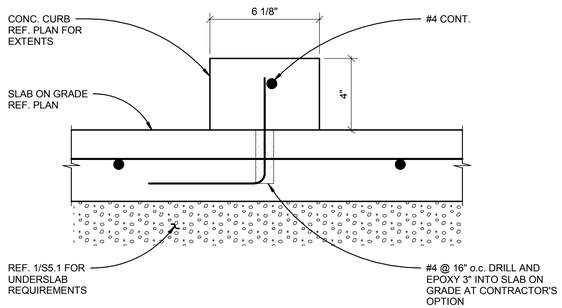

6 SLAB ON GRADE CURB

3" = 1'-0"

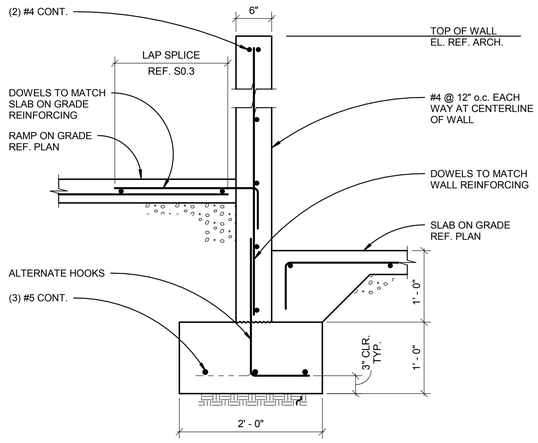

5 CONCRETE WALL AT SLAB STEP

1" = 1'-0"

2 SECTION AT SLAB STEP

1" = 1'-0"

BID/PERMIT SET

kpff

STRUCTURAL REGISTERED PROFESSIONAL ENGINEER 15773 OREGON JAN. 21, 1983 JERALD L ABBE

EXPIRES 12-31-19

CONCRETE DETAILS
ACMA
BEAVERTON SCHOOL DISTRICT

S5.2

74-18109-00

03/14/2019

REVISIONS

DLR Group

Architecture Engineering Planning Interiors

© DLR Group Architecture & Engineering Inc., an Oregon corporation, ALL RIGHTS RESERVED

C:\Users\brad\Documents\10021800772_bradfrench3417.rvt
3/13/2019 2:52:14 PM

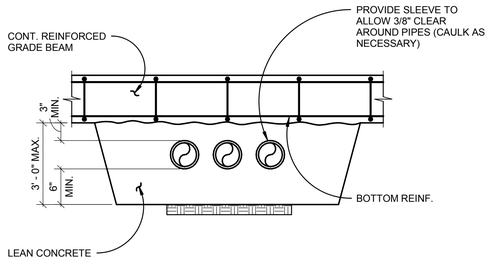

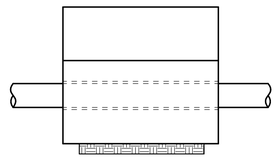

PIPES RUNNING PERPENDICULAR TO GRADE BEAM

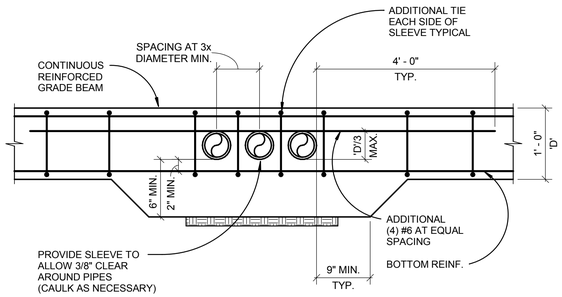

PIPES ABOVE BOTTOM REINFORCEMENT

5 PIPE/CONDUIT AT GRADE BEAM

1" = 1'-0"

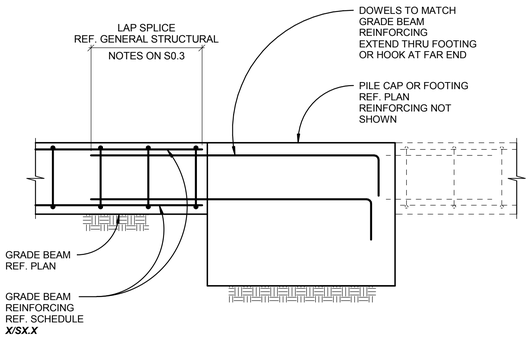

3 GRADE BEAM AT FOOTING

1" = 1'-0"

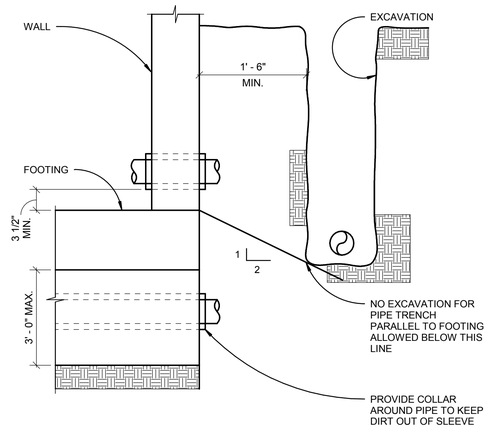

SECTION

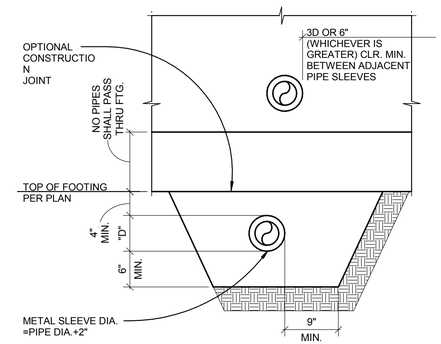

ELEVATION

NOTES:

1. STEP FOOTING PER TYP. STEPPED FOOTING DETAIL AS REQUIRED TO SATISFY THESE CONDITIONS.
2. GENERAL CONTRACTOR TO COORDINATE EXACT DEPTH AND LOCATION OF PIPE.
3. "D" SHALL NOT EXCEED 8".
4. PROVIDE WALL REINF. AROUND PENETRATION PER ***X/XXX***.

TYP. PIPE PENETRATION AT FOUNDATION WALL

1" = 1'-0"

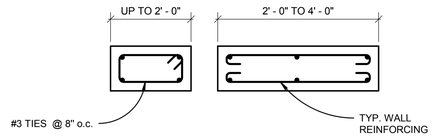

BARS IN SMALL SECTION

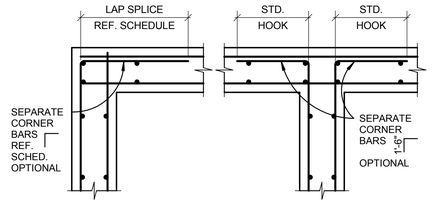

CORNER DETAILS

NOTE:
ABOVE DETAILS APPLY IN BOTH HORIZONTAL AND VERTICAL DIRECTIONS.

DOUBLE LAYER REINFORCING

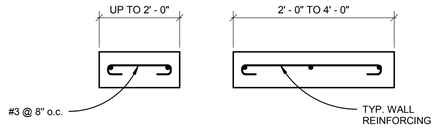

BARS IN SMALL SECTION

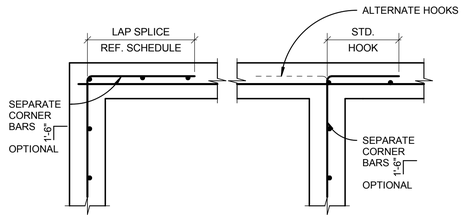

NOTE:
ABOVE DETAILS APPLY IN BOTH HORIZONTAL AND VERTICAL DIRECTIONS.

CORNER DETAILS

SINGLE LAYER REINFORCING

1 WALL DETAILS - REINFORCING

1" = 1'-0"

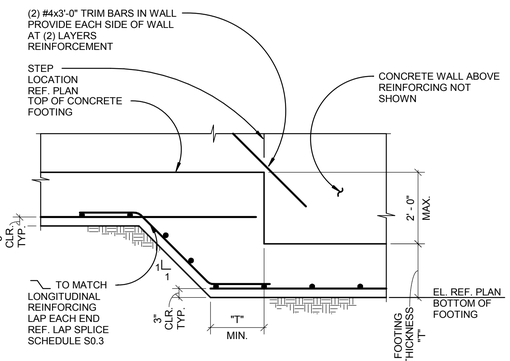

TYP. STEPPED WALL FOOTING DETAIL

1/2" = 1'-0"

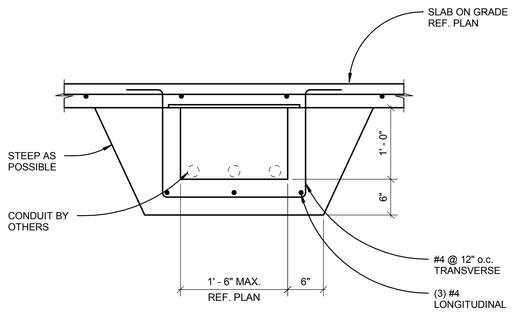

6 SECTION AT UTILITY TRENCH

1" = 1'-0"

BID/PERMIT SET

kpff

STRUCTURAL REGISTERED PROFESSIONAL ENGINEER 15773 OREGON JAN. 21, 1983 JERALD L ABDILLE

EXPIRES 12-31-19

CONCRETE DETAILS
ACMA
BEAVERTON SCHOOL DISTRICT

S5.3
74-18109-00
03/14/2019
REVISIONS

DLR Group
Architecture Engineering Planning Interiors

© DLR Group Architecture & Engineering Inc., an Oregon corporation, ALL RIGHTS RESERVED

C:\Users\brad\Documents\10021800772_bradfrench3417.rvt
3/13/2019 2:52:15 PM

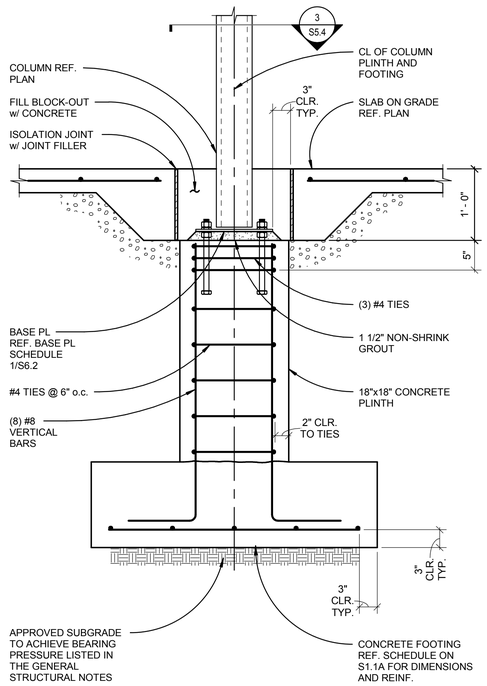

2 TYP. PLINTH AND FOOTING DETAIL

1" = 1'-0"

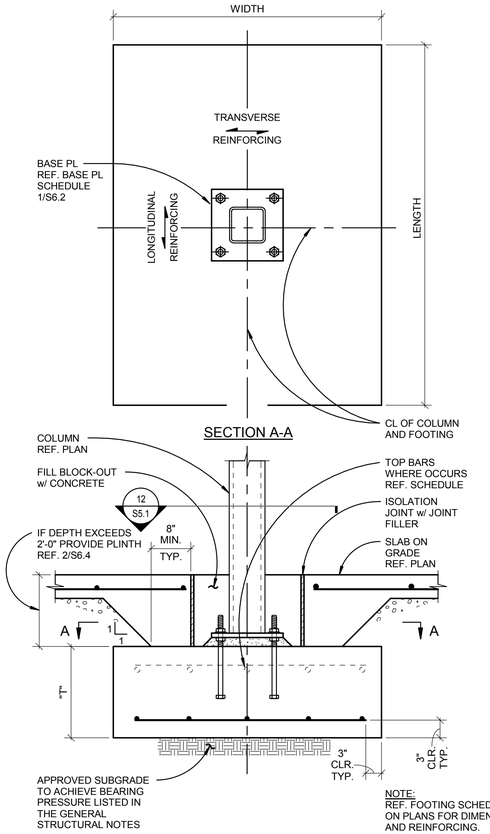

1 FOOTING DETAIL AT STEEL COLUMN

1" = 1'-0"

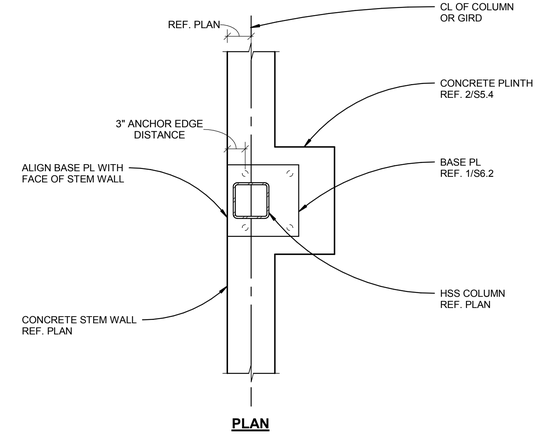

3 HSS COLUMN BASE PLATE AT CONCRETE PLINTH

1" = 1'-0"

BID/PERMIT SET

kpff

STRUCTURAL REGISTERED PROFESSIONAL ENGINEER 15773 OREGON JAN. 21, 1983 GERALD L ABDILE

EXPIRES 12-31-19

CONCRETE DETAILS

ACMA

BEAVERTON SCHOOL DISTRICT

S5.4

74-18109-00

03/14/2019

REVISIONS

DLR Group

Architecture Engineering Planning Interiors

© , DLR Group Architecture & Engineering inc., an Oregon corporation, ALL RIGHTS RESERVED

C:\Users\brad\Documents\10021800772_bradfrench3417.rvt
3/13/2019 2:52:16 PM

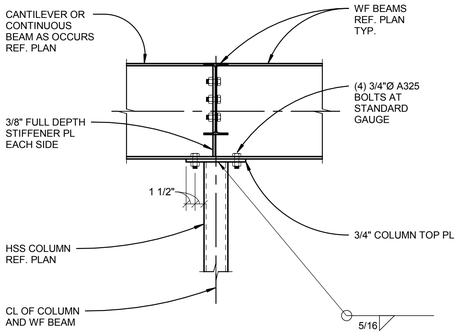

BEAM FLANGE
bf ≥ 5 1/2"

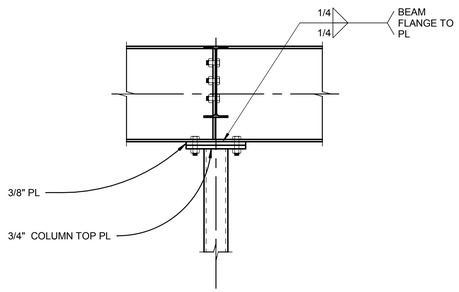

BEAM FLANGE
bf < 5 1/2"

NOTES:

1. FOR STIFFENER PL INFORMATION REF. 2/S6.1.
2. FOR INFORMATION NOT SHOWN ON BEAM FLANGE < 5 1/2" REF. CONDITION BEAM FLANGE > 5 1/2".

7 TYP. BEAM OVER COLUMN DETAIL
1" = 1'-0"

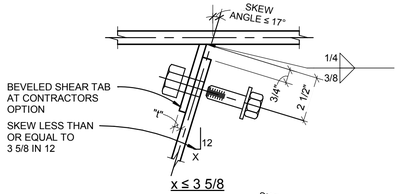

x ≤ 3 5/8

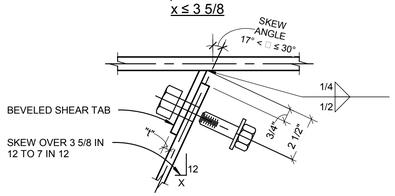

3 5/8 < x ≤ 7

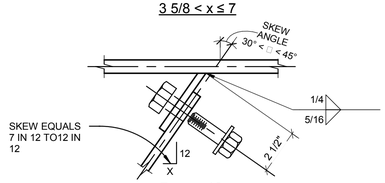

7 < x < 12

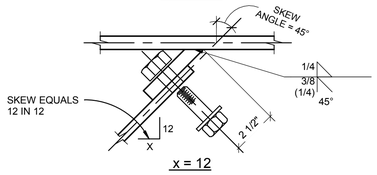

x = 12

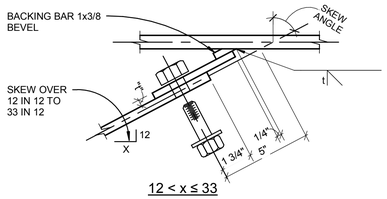

12 < x ≤ 33

5 TYP. SKEWED SHEAR PL WELDS
3" = 1'-0"

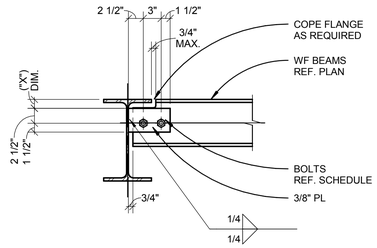

W6 OR W8 BEAM TO BEAM DESIGNATED 2D

NOTES:

1. FOR BOLTS REF. 1/S6.1.
2. FOR ("X") DIMENSION REF. DETAIL 2/S6.1.

6 2D BOLTED BEAM TO BEAM CONNECTION
1" = 1'-0"

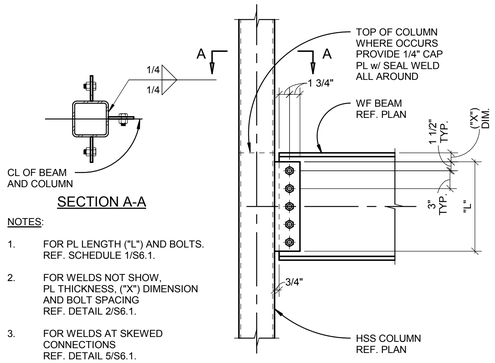

SECTION A-A

NOTES:

1. FOR PL LENGTH ("L") AND BOLTS. REF. SCHEDULE 1/S6.1.
2. FOR WELDS NOT SHOW, PL THICKNESS, ("X") DIMENSION AND BOLT SPACING REF. DETAIL 2/S6.1.
3. FOR WELDS AT SKEWED CONNECTIONS REF. DETAIL 5/S6.1.

3 TYP. BOLTED WF BEAM TO HSS COLUMN AT MULTIPLE SIDED CONNECTIONS - DESIGNATED X
1" = 1'-0"

BEAM TO HSS COLUMN DESIGNATED XS

WELDED BEAM TO HSS COLUMN SHEAR PL - DESIGNATED XW

NOTES:

1. FOR INFORMATION NOT SHOWN XW REF. CONDITION XS.
2. FOR PL LENGTH ("L") AND BOLTS REF. SCHEDULE 1/S6.1.
3. FOR ("X") DIMENSION REF. DETAIL 2/S6.1.

4 BOLTED THRU PL AT WF BEAM TO HSS COLUMN
1" = 1'-0"

SINGLE ROW BEARING BOLTED BEAM CONNECTION SCHEDULE

CONNECTION TYPE	NO. OF 3/4"Ø A325 BOLTS	PL LENGTH "L"	HOLE SIZE
2D	2	REFERENCE DETAIL 6/S6.1	
2 2F	2	6"	STANDARD HOLE
3 3F	3	9"	STANDARD HOLE
4 4F	4	12"	STANDARD HOLE
5 5F	5	15"	STANDARD HOLE
6 6F	6	18"	STANDARD HOLE
7 7F	7	21"	STANDARD HOLE
8 8F	8	24"	HORIZONTAL SHORT SLOTTED HOLE IN PL
9 9F	9	27"	HORIZONTAL SHORT SLOTTED HOLE IN PL
10 10F	10	30"	HORIZONTAL SHORT SLOTTED HOLE IN PL

NOTES:

1. X INDICATES BEARING TYPE CONNECTION WITH THREADS INCLUDED IN SHEAR PLANE (A325N).
2. XF INDICATES SLIP CRITICAL CONNECTION (A325SC).

1 SINGLE ROW BEARING BOLTED BEAM CONNECTION SCHEDULE
1" = 1'-0"

K	"X"
K ≤ 1 1/2"	1 1/2"
1 1/2" < K ≤ 2"	2"
2" < K ≤ 3"	3"
K ≥ 3"	K

NOTE:
K REPRESENTS THE LARGER K DIMENSION OF THE TWO CONNECTION BEAMS

TYP. BEAM TO BEAM DESIGNATED X

FULL DEPTH SHEAR PL DESIGNATED XS

FULL DEPTH WELDED SHEAR PL DESIGNATED XW

NOTES:

1. FOR SCHEDULE REF. 1/S6.1.
2. FOR INFORMATION NOT SHOWN ON XS AND XW REFERENCE CONDITION X.
3. FOR WELDS AT SKEWED CONNECTIONS REF. 5/S6.1.

2 TYP. BOLTED BEAM TO BEAM CONNECTION
1" = 1'-0"

BID/PERMIT SET

kpff

REGISTERED PROFESSIONAL ENGINEER
15773
OREGON
JAN. 21, 1983
GERALD L ABDILE
EXPIRES 12-31-19

STEEL DETAILS
ACMA
BEAVERTON SCHOOL DISTRICT

S6.1
74-18109-00
03/14/2019
REVISIONS

DLR Group
Architecture Engineering Planning Interiors

© . DLR Group Architecture & Engineering Inc., an Oregon corporation. ALL RIGHTS RESERVED

C:\Users\bradf\Documents\10021800772_bradfrench3417.rvt
3/13/2019 2:52:18 PM

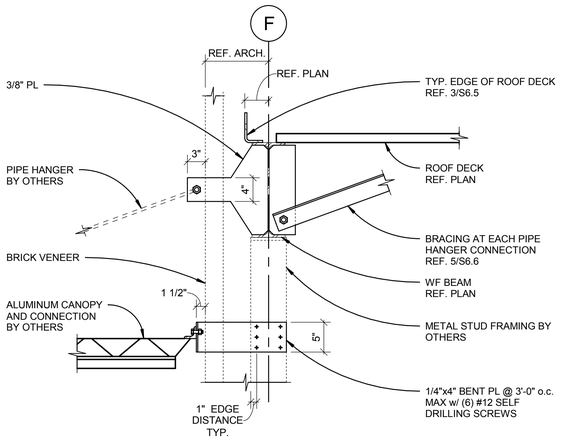

8 CANOPY CONNECTION DETAIL
1" = 1'-0"

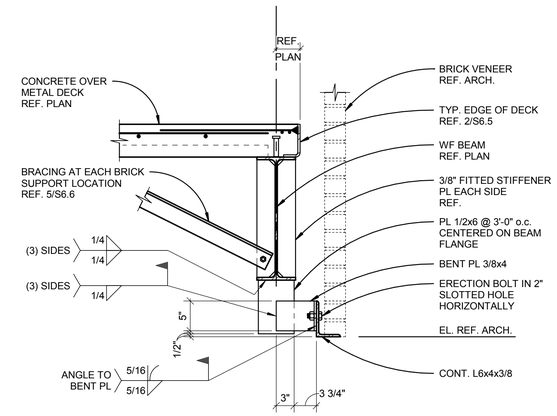

5 BRICK SUPPORT AT WF BEAM DETAIL
1" = 1'-0"

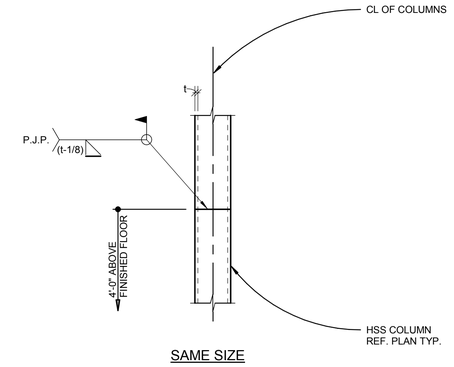

SAME SIZE

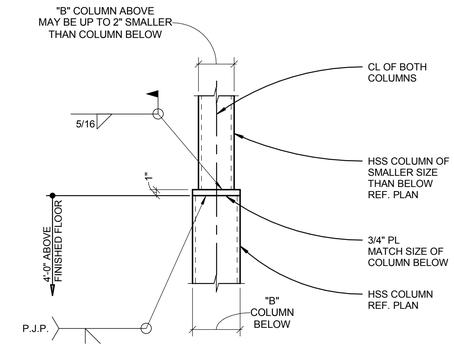

STEPPED SIZE

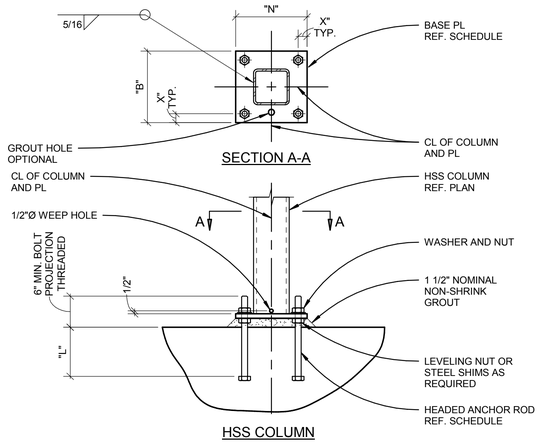

HSS COLUMN

TYP. GRAVITY COLUMN BASE PL SCHEDULE

COLUMN SIZE	N (IN.)	B (IN.)	T (IN.)	X (IN.)	L (IN.)	ANCHOR RODS (NO.) DIAMETER
6x6	12	12	1"	1 1/2	9	(4) 7/8"Ø
8x8	14	14	1"	1 1/2	9	(4) 7/8"Ø
8x6	14	12	1"	1 1/2	9	(4) 7/8"Ø
4x4	10	10	3/4"	1 1/2	9	(4) 7/8"Ø

NOTES:

1. ANCHOR RODS SHALL BE HEADED ASTM F1554 GRADE 36 U.N.O. THREADED ROD MAY BE USED AT CONTRACTOR'S OPTION PROVIDED THAT NUT IS TACK WELDED TO ROD.
2. ANCHOR ROD HOLE DIAMETERS (dh) SHALL BE AS FOLLOWS:
   db ≤ 1" : dh = db + 5/16"
   1" < db ≤ 2" : dh = db + 1/2"
   db > 2" : dh = db + 1"
3. PROVIDE MILL FINISH AT BOTTOM OF COLUMN AND TOP OF BASE PL
4. ACCEPTABLE TO SLOT HOLES RADIALLY TO ALLOW FOR CONSTRUCTION TOLERANCE PLATE WASHER REQUIRED REF. NOTES.
5. SQUARE OR CIRCULAR PL WASHERS SHALL BE USED (ASTM A36) WHERE HOLES ARE SLOTTED OR OVERSIZED. MINIMUM WASHER SIZES SHALL BE IN ACCORDANCE WITH AISC TABLE 14-2.

1 TYP. GRAVITY COLUMN BASE PLATE DETAIL
1" = 1'-0"

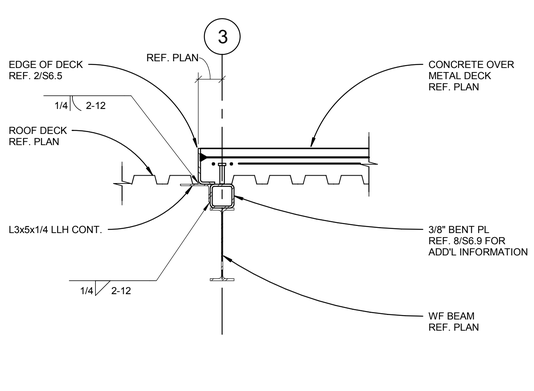

9 COPED BEAM FLANGE AT CENTRAL STAIR
3" = 1'-0"

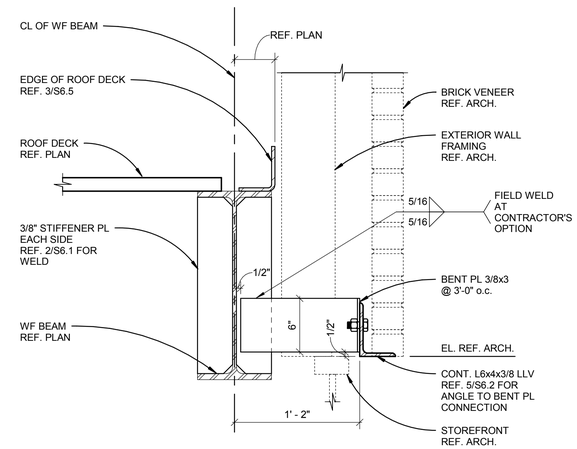

6 COMMONS LOW ROOF FRAMING DETAIL
1" = 1'-0"

10 FLOOR TO ROOF DECK TRANSITION
1" = 1'-0"

7 SOUTH RAMP ROOF AT STOREFRONT DETAIL
1 1/2" = 1'-0"

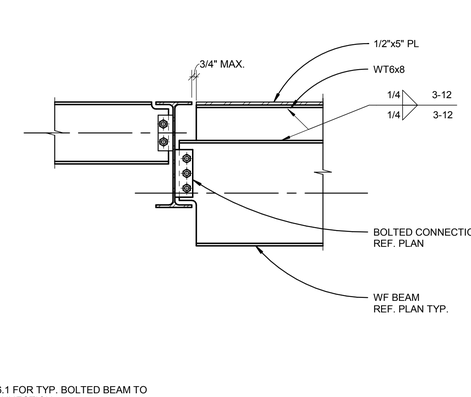

NOTE:
REF. 2/S6.1 FOR TYP. BOLTED BEAM TO BEAM CONNECTION.

4 OFFSET CONNECTION DETAIL
1" = 1'-0"

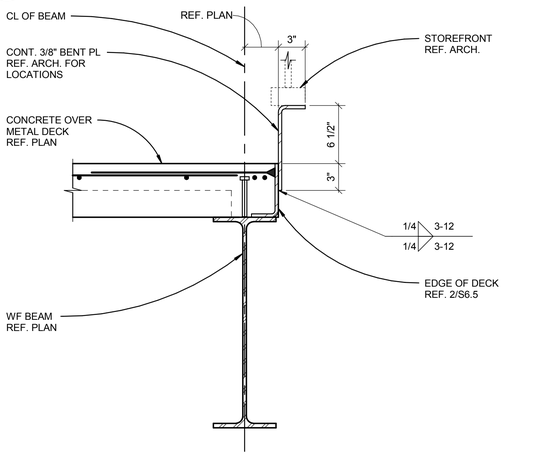

3 STOREFRONT BASE AT DANCE BUILT UP FLOOR
1 1/2" = 1'-0"

BID/PERMIT SET

kpff

STRUCTURAL
REGISTERED PROFESSIONAL
ENGINEER
15773
OREGON
JAN. 21, 1983
GERALD L. ABDILLE
EXPIRES 12-31-19

STEEL DETAILS
ACMA
BEAVERTON SCHOOL DISTRICT

S6.2
74-18109-00
03/14/2019
REVISIONS

DLR Group
Architecture Engineering Planning Interiors

© . DLR Group Architecture & Engineering Inc., an Oregon corporation. ALL RIGHTS RESERVED

C:\Users\brad\Documents\1002180077 2_bradfrench3417.rvt
3/13/2019 2:52:20 PM

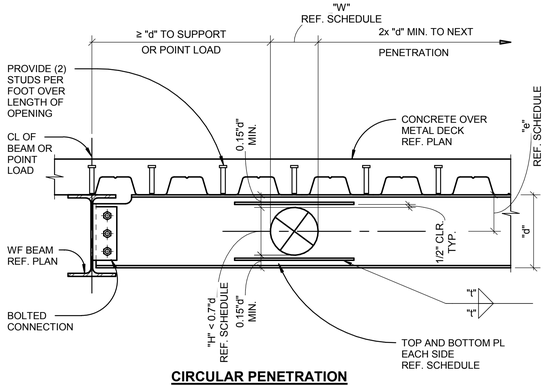

CIRCULAR PENETRATION

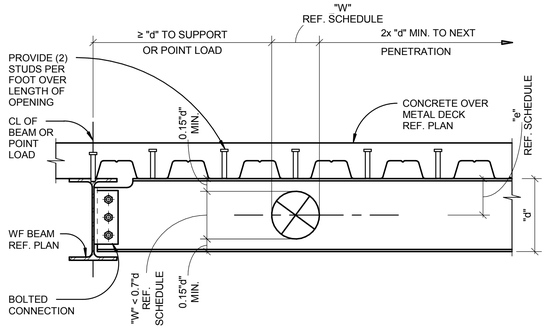

CIRCULAR PENETRATION

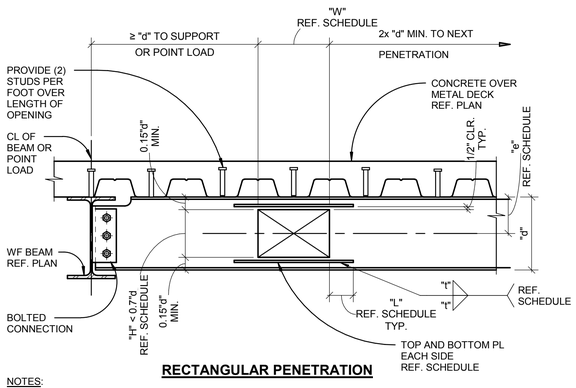

RECTANGULAR PENETRATION

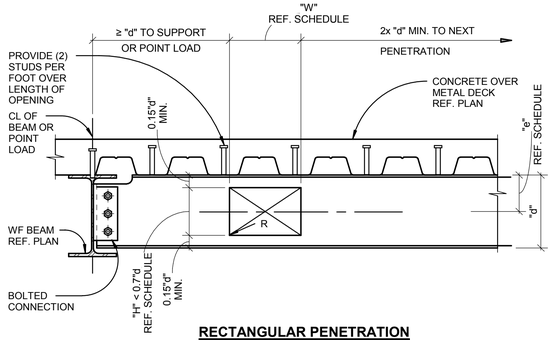

RECTANGULAR PENETRATION

NOTES:

1. REF. PLANS FOR SIZES AND LOCATIONS OF PENETRATIONS CONTRACTOR TO VERIFY.
2. ALL PENETRATION SHALL BE IN SHOP DRAWINGS AND REVIEWED BY THE ENGINEER. NO PENETRATIONS SHALL BE MADE WITHOUT APPROVAL FROM ENGINEER.
3. R = 2x WEB THICKNESS OR 5/8" WHICHEVER IS GREATER.
4. FOR BEAM PENETRATION SCHEDULE REF. 3/S6.3.
5. FOR BOLTED CONNECTION REF. 2/S6.1.

5 BEAM PENETRATION - REINFORCED
1" = 1'-0"

NOTES:

1. REF. PLANS FOR SIZES AND LOCATIONS OF PENETRATIONS CONTRACTOR TO VERIFY.
2. ALL PENETRATION SHALL BE IN SHOP DRAWINGS AND REVIEWED BY THE ENGINEER. NO PENETRATIONS SHALL BE MADE WITHOUT APPROVAL FROM ENGINEER.
3. R = 2x WEB THICKNESS OR 5/8" WHICHEVER IS GREATER.
4. FOR BEAM PENETRATION SCHEDULE REF. 3/S6.3.
5. FOR BOLTED CONNECTION REF. 2/S6.1.

4 BEAM PENETRATION - UNREINFORCED
1" = 1'-0"

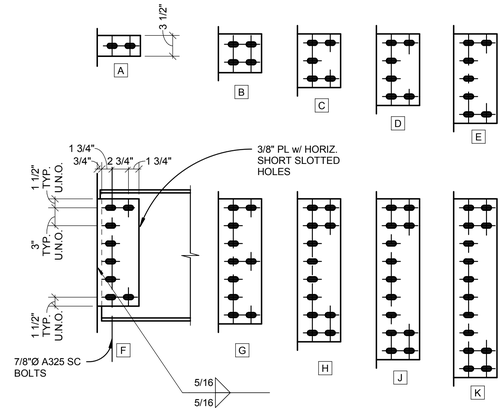

DOUBLE ROW SINGLE SHEAR PL CONNECTION SCHEDULE

CONNECTION TYPE	BOLTS 1ST ROW	BOLTS 2ND ROW	PL LENGTH "L"	MIN. WEB "t" IF TOP FLANGE COPED	MIN. WEB "t" IF TOP AND BOTTOM FLANGE COPED
A	1	1	3 1/2"	.173	.202
B	2	2	6"	.187	.218
C	3	2	9"	-	.195
D	4	2	12"	-	-
E	5	2	15"	-	-
F	6	2	18"	-	-
G	7	3	21"	-	-
H	8	4	24"	-	-
J	9	4	27"	-	-
K	10	4	30"	-	-

NOTE:
✳ CAPACITY IS REDUCED BY FACTOR t/wt MIN. FOR tw < MIN. WEB t

2 DOUBLE ROW SINGLE SHEAR PL CONNECTION
1" = 1'-0"

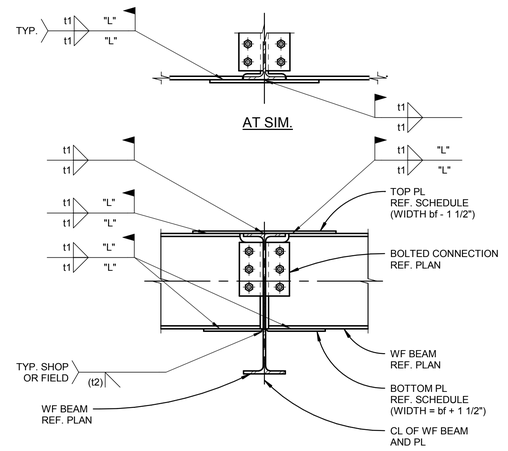

TYP. BEAM TO BEAM MOMENT CONNECTION SCHEDULE

BEAM SIZE	BOLTED CONNECTION TYPE	TOP PL THICKNESS	BOTTOM PL THICKNESS	WELD t1 THICKNESS	WELD t1 LENGTH "L"	WELD t2
W12x19	3	1/4"	1/4"	3/16"	4"	

1 TYP. BEAM TO BEAM MOMENT CONNECTION
1" = 1'-0"

BEAM PENETRATION

MARK	TYPE	"H"	"W"	"e"	REINF. PLATE "L"	REINF. PLATE WIDTH	REINF. PLATE THICKNESS	WELD "t"
1	U	-	14.5	d/2	-	-	-	-
2	U	-	-	-	-	-	-	-
3	R							
3	R							
4	R							
5	R							

NOTES:

1. U INDICATES UNREINFORCED BEAM PENETRATION REF. 4/S6.3.
2. R INDICATES REINFORCED BEAM PENETRATION REF. 5/S6.3.

3 BEAM PENETRATION - SCHEDULE
1" = 1'-0"

BID/PERMIT SET

kpff

REGISTERED PROFESSIONAL ENGINEER
15773
OREGON
JAN. 21, 1983
GERALD L. ABDILE
EXPIRES 12-31-19

STEEL DETAILS
ACMA
BEAVERTON SCHOOL DISTRICT

S6.3
74-18109-00
03/14/2019
REVISIONS

DLR Group
Architecture Engineering Planning Interiors

© DLR Group Architecture & Engineering Inc., an Oregon corporation, ALL RIGHTS RESERVED

C:\Users\bradl\Documents\10021800772_bradfrench3417.rvt
3/13/2019 2:52:22 PM

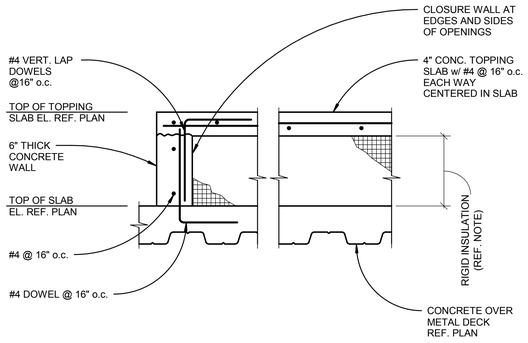

NOTES:

1. RIGID INSULATION TO BE EPS REF. GENERAL STRUCTURAL NOTES OR EQUIVALENT.
2. DECK DIRECTION VARIES REF. PLAN.

8 TYP. RAISED TOPPING SLAB DETAIL
1" = 1'-0"

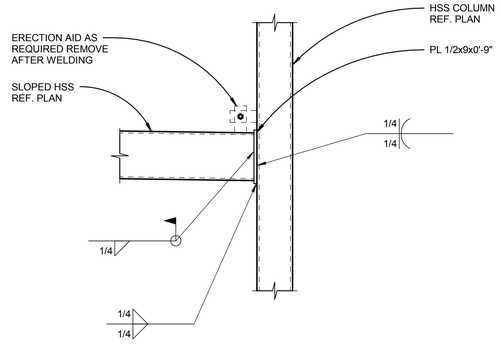

5 HSS BEAM TO COLUMN CONNECTION
1" = 1'-0"

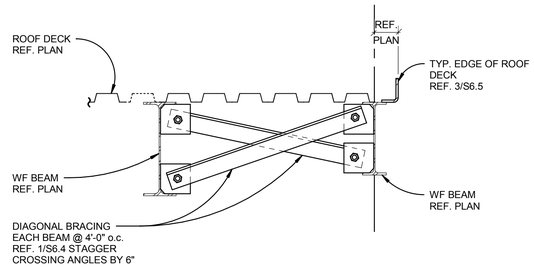

3 DIAGONAL BRACING AT COMMONS LOW ROOF
1" = 1'-0"

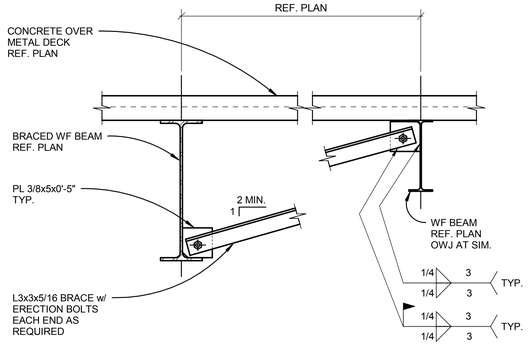

AT COMPOSITE DECK

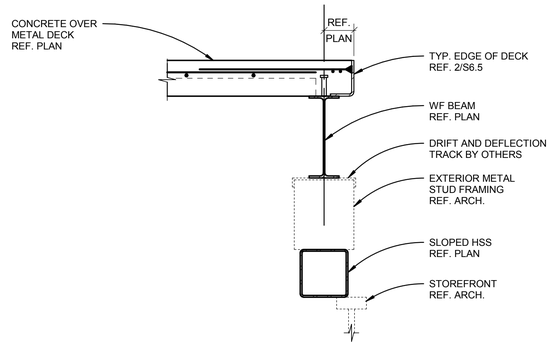

6 HSS AT STOREFRONT HEAD
1" = 1'-0"

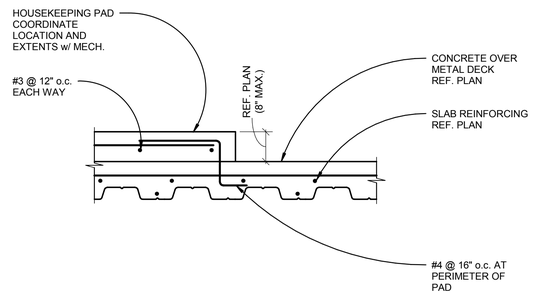

NOTES:

1. FOR HOUSEKEEPING PADS THICKER THAN 8" REF. 10/S6.4.
2. AT CONTRACTOR'S OPTION DRILL AND EPOXY w/ 4" EMBEDMENT IN LIEU OF DOWELS.
3. DECK DIRECTION VARIES REF. PLAN.

7 HOUSEKEEPING PAD AT COMPOSITE DECK
1" = 1'-0"

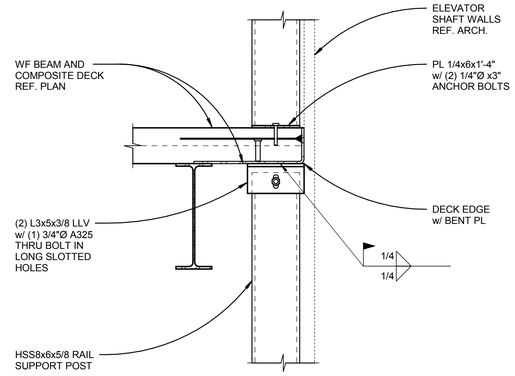

TYPICAL FRAMING STOPS

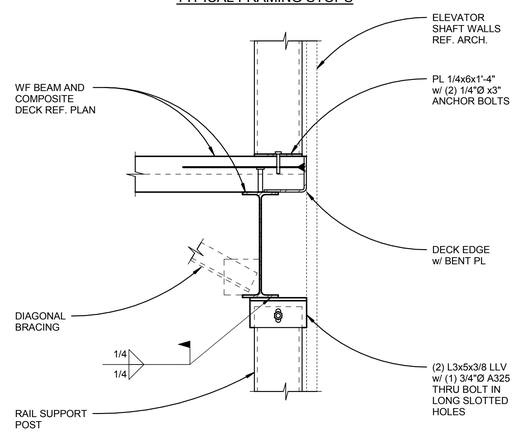

NOTE:
FOR INFORMATION NOT SHOWN REF. TYPICAL DETAIL.

TYPICAL FRAMING STOPS BELOW BEAM

NOTES:

1. FOR DECK EDGE REF. 2/S6.5.
2. FOR DIAGONAL BRACING REF. 1/S6.4.

4 ELEVATOR RAIL SUPPORT FRAMING
1" = 1'-0"

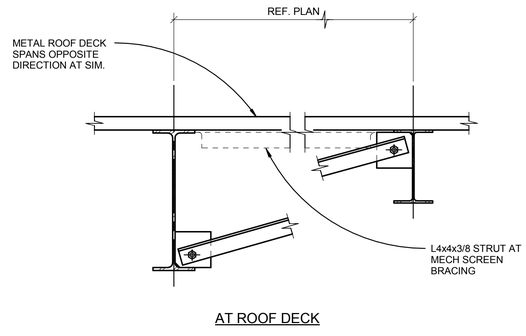

AT ROOF DECK

NOTES:

1. REF. ◀——▶ DESIGNATION ON FRAMING PLANS FOR BRACE LOCATIONS.
2. FOR INFORMATION NOT SHOWN REF. DETAIL AT COMPOSITE DECK.

1 TYP. DIAGONAL BRACING AT WF BEAM
1" = 1'-0"

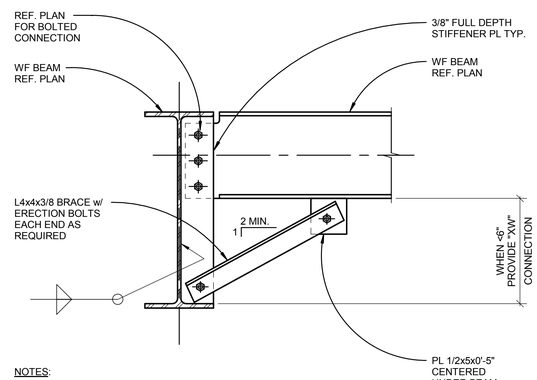

NOTES:

1. REF. ◀——▶ DESIGNATION ON FRAMING PLANS FOR BRACE LOCATIONS.
2. FOR "XW" CONNECTION REF. 2/S6.1.

2 TYP. BOTTOM FLANGE BRACE AT WF BEAM
1" = 1'-0"

BID/PERMIT SET

kpff

STRUCTURAL REGISTERED PROFESSIONAL ENGINEER 15773 OREGON JAN. 21, 1983 GERALD L. ABDILE

EXPIRES 12-31-19

STEEL DETAILS
ACMA
BEAVERTON SCHOOL DISTRICT

S6.4
74-18109-00
03/14/2019
REVISIONS

DLR Group
Architecture Engineering Planning Interiors

© DLR Group Architecture & Engineering inc., an Oregon corporation, ALL RIGHTS RESERVED

C:\Users\brad\Documents\10021800772_bradfrench3417.rvt
3/13/2019 2:52:24 PM

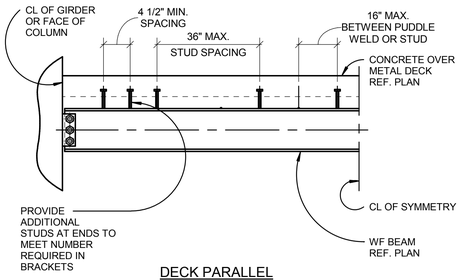

DECK PARALLEL

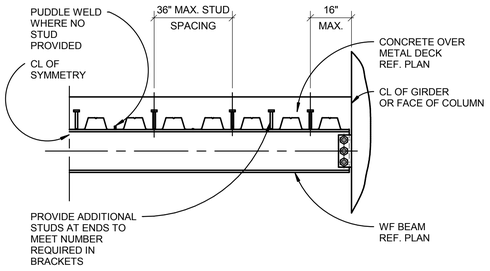

DECK PERPENDICULAR

NOTES:

1. THE MINIMUM NUMBER OF STUDS REQUIRED IS SHOWN AS [X] ON THE FRAMING PLANS. [X-Y-Z] INDICATES NUMBER OF STUDS ON A GIRDER BETWEEN BEAM CONNECTION POINTS. NO STUDS ARE REQUIRED WHERE NO DESIGNATION IS GIVEN. ADDITIONAL STUDS MAY BE REQUIRED TO MEET THE ABOVE MAXIMUM SPACING REQUIREMENTS.
2. IF MULTIPLE STUDS ARE REQUIRED IN ONE FLUTE, THE TRANSVERSE SPACING SHALL BE 3" MINIMUM.

7 TYP. COMPOSITE BEAM STUD SPACING DETAIL

1" = 1'-0"

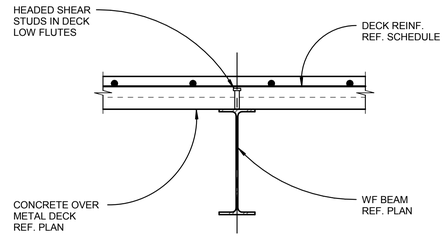

DECK PERPENDICULAR

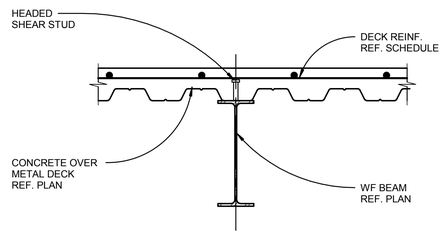

DECK PARALLEL (CENTERED)

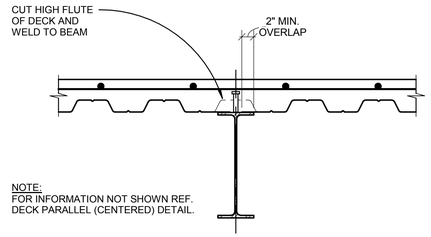

NOTE:
FOR INFORMATION NOT SHOWN REF. DECK PARALLEL (CENTERED) DETAIL.

DECK PARALLEL (OFF-CENTER)

NOTE:
REF. SCHEDULE 1/S6.5 FOR DECK ATTACHMENT AND SLAB REINFORCING.

6 TYP. FLOOR DECK TO BEAM DETAIL

1" = 1'-0"



FLOOR AND ROOF DECK SCHEDULE

DECK DESIGNATION	DECK TYPE	CONC. TOPPING THICKNESS	CONCRETE TOPPING STRENGTH	SLAB REINFORCING	CONNECTIONS		
					AT SUPPORT MEMBERS	AT PARALLEL MEMBERS	AT SIDE LAPS
D - 1	3"-20 GA.	3"	4000 PSI	#4 @ 16" o.c.	NOTE 3	NOTE 3	BUTTON PUNCH VSC 2 @ 8" o.c.
D - 2	1 1/2"-20 GA.	-	-	-	PNEUTEK 36/7	PNEUTEK @ 6" o.c.	VSC 2 @ 8" o.c.
D - 3	1 1/2"-20/20 GA. ACCOUSTICAL CELLULAR DECK	-	-	-	PNEUTEK 36/7	PNEUTEK @ 6" o.c.	VSC 2 @ 8" o.c.

NOTES:

1. REF. GENERAL STRUCTURAL NOTES FOR BASIS OF DESIGN DECK PROPERTIES.
2. REF. GENERAL STRUCTURAL NOTES FOR CONCRETE STRENGTH AT FLOOR DECK AND CONCRETE LEVELNESS.
3. WELDED HEADED STUDS PER DRAWINGS MAY BE PROVIDED IN LIEU OF DECK WELDS INDICATED.

1 FLOOR AND ROOF DECK SCHEDULE

1" = 1'-0"

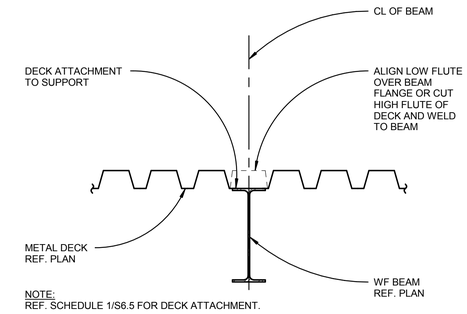

NOTE:
REF. SCHEDULE 1/S6.5 FOR DECK ATTACHMENT.

4 TYP. ROOF DECK TO BEAM DETAIL

1" = 1'-0"

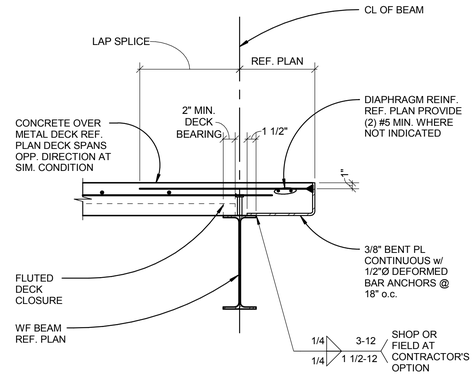

NOTES:

1. REF. GENERAL STRUCTURAL NOTES FOR LAP SPLICE LENGTH.
2. REF. SCHEDULE 1/S6.5 FOR DECK ATTACHMENT.

2 TYP. EDGE OF DECK DETAIL

1" = 1'-0"

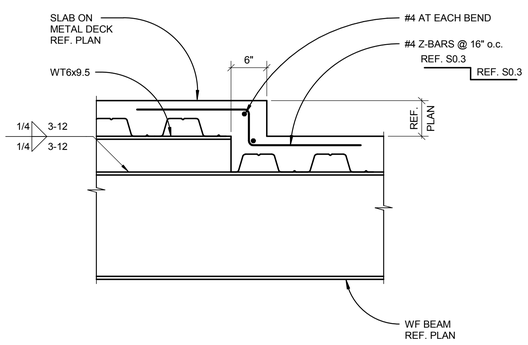

9 STEP IN SLAB DETAIL

1" = 1'-0"

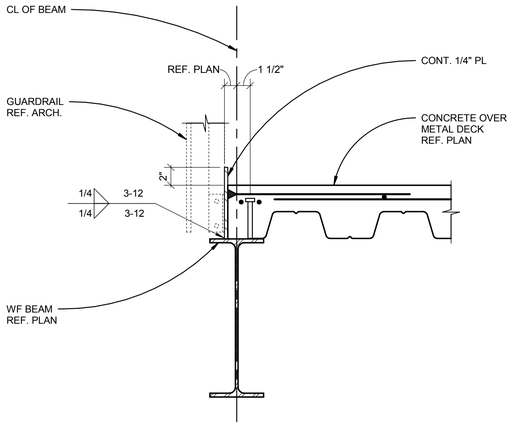

8 EDGE OF DECK AT GUARDRAIL DETAIL

1 1/2" = 1'-0"

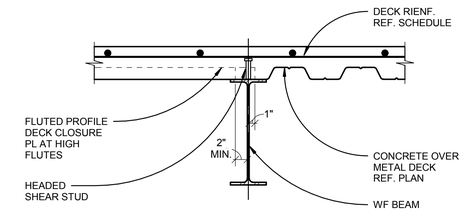

NOTE:
REF. SCHEDULE 1/S6.5 FOR DECK ATTACHMENT AND SLAB REINFORCING.

5 DETAIL AT DECK DISCONTINUITY

1" = 1'-0"

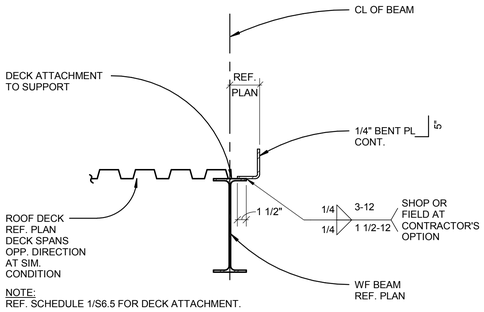

NOTE:
REF. SCHEDULE 1/S6.5 FOR DECK ATTACHMENT.

3 TYP. EDGE OF ROOF DECK DETAIL

1" = 1'-0"

BID/PERMIT SET

kpff

REGISTERED PROFESSIONAL ENGINEER
15773
OREGON
JAN. 21, 1983
JERALD L ABDIE

EXPIRES 12-31-19

STEEL DECK DETAILS
ACMA
BEAVERTON SCHOOL DISTRICT

S6.5
74-18109-00
03/14/2019
REVISIONS

DLR Group
Architecture Engineering Planning Interiors

© , DLR Group Architecture & Engineering Inc., an Oregon corporation, ALL RIGHTS RESERVED

C:\Users\bradDocuments\10021800772_bradfrench3417.rvt
3/13/2019 2:52:25 PM

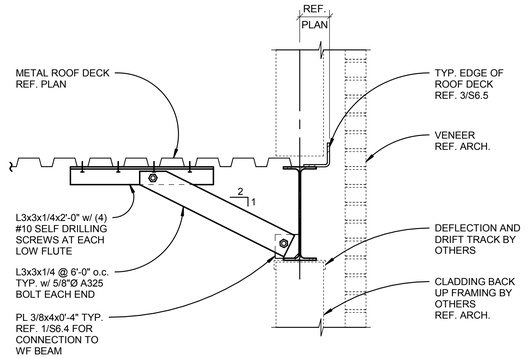

ROOF DECK

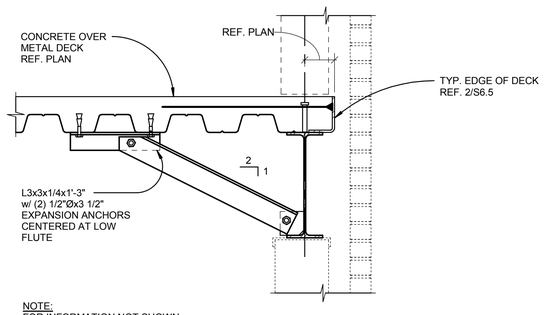

NOTE:
FOR INFORMATION NOT SHOWN
REF. ROOF DECK DETAIL.

FLOOR DECK

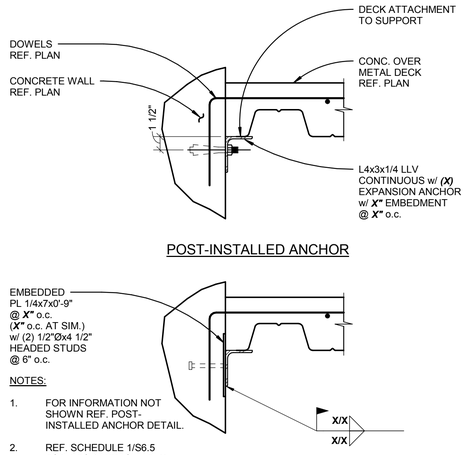

POST-INSTALLED ANCHOR

NOTES:

1. FOR INFORMATION NOT SHOWN REF. POST-INSTALLED ANCHOR DETAIL.
2. REF. SCHEDULE 1/S6.5 FOR DECK ATTACHMENT.

EMBEDMENT

3 DECKING LEDGER SUPPORT ANGLE

1 1/2" = 1'-0"

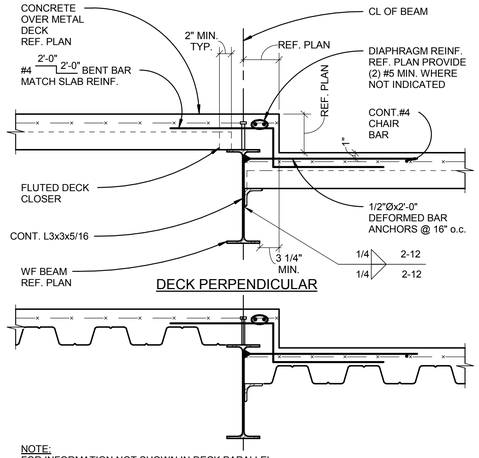

DECK PERPENDICULAR

NOTE:
FOR INFORMATION NOT SHOWN IN DECK PARALLEL
REF. DECK PERPENDICULAR DETAIL.

DECK PARALLEL

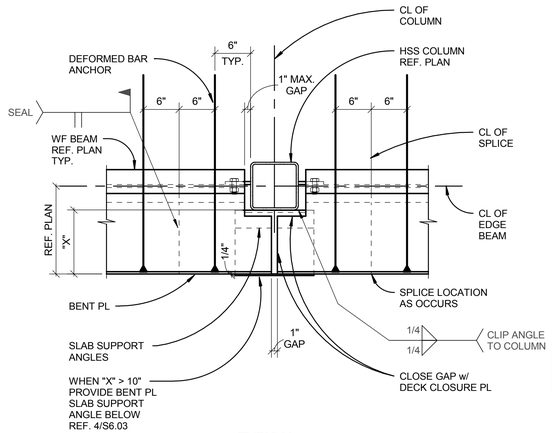

TYPICAL

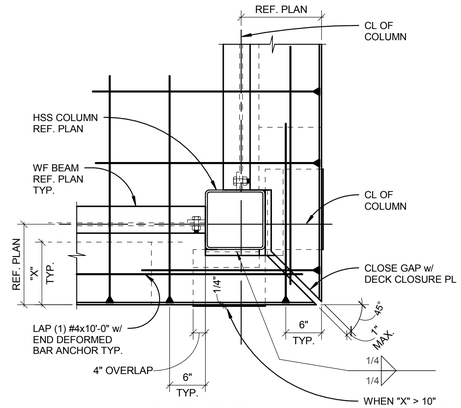

AT CORNER COLUMN

NOTES:

1. FOR INFORMATION NOT SHOWN AT CORNER COLUMN REF. TYPICAL DETAIL.
2. FOR FLOOR EDGE OF DECK DETAIL REF. 2/S6.5.
3. FOR ROOF DECK OF DECK EDGE DETAIL REF. 3/S6.5.
4. FOR SLAB SUPPORT ANGLE DETAIL REF. 2/S6.6.

5 CLADDING SUPPORT BRACING

1" = 1'-0"

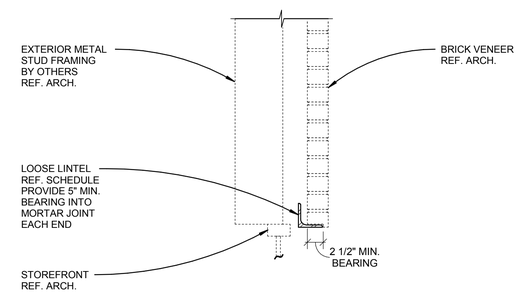

MAX. SPAN	ANGLE SIZE
4'-0"	L4x4x3/8
8'-0"	L7x4x3/8 LLV

NOTE:
ALL LOOSE LINTELS ARE
TO BE GALVANIZED.

6 LOOSE LINTEL SCHEDULE

1" = 1'-0"

4 TYP. SLAB STEP DETAIL

1" = 1'-0"

1 DECK EDGE DETAIL AT COLUMN

1" = 1'-0"

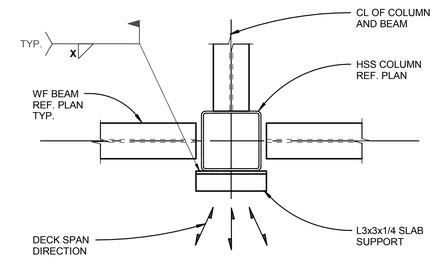

NOTES:

1. SLAB SUPPORT ANGLES ARE REQUIRED AT ALL COLUMN LOCATIONS WHERE THERE IS NO BEAM OR OTHER SUPPORT FOR SLAB AT COLUMN PENETRATION.
2. IN ADDITIONTO PERMANENET SLAB SUPPORT ANGLES, THE CONTRACTOR SHALL PROVIDE MISCELLANEOUS DECK SUPPORTS AT OTHER LOCATIONS REQUIRED TO MAINTAIN DECK LEVEL UNTIL CONCRETE CURES.
3. OTHER CONFIGURATIONS REQUIRING SLAB SUPPORT ANGLES INCLUDE, BUT ARE NOT LINIMITED TO, THE FOLLOWING:

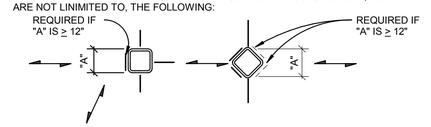

2 SLAB SUPPORT AT COLUMN

1" = 1'-0"

BID/PERMIT SET

kpff

STRUCTURAL ENGINEER REGISTERED PROFESSIONAL ENGINEER 15773 OREGON JAN. 21, 1983 GERALD L ABDILE

EXPIRES 12-31-19

STEEL DETAILS
ACMA
BEAVERTON SCHOOL DISTRICT

S6.6
74-18109-00
03/14/2019
REVISIONS

DLR Group
Architecture Engineering Planning Interiors

© DLR Group Architecture & Engineering Inc., an Oregon corporation, ALL RIGHTS RESERVED

C:\Users\bradf\Documents\10021800772_bradfrench3417.rvt
3/13/2019 2:52:27 PM

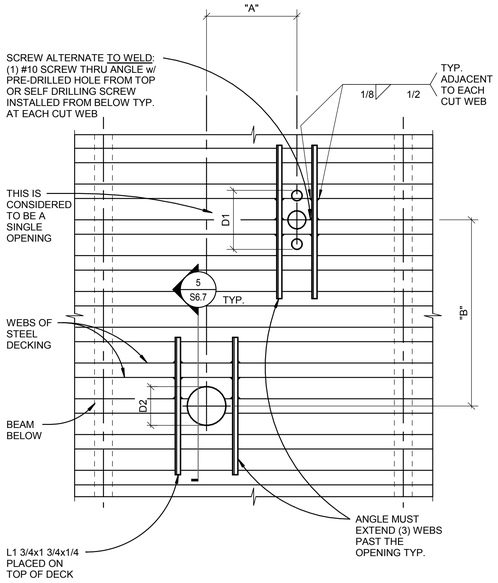

NOTES:

1. HOLES 6"Ø AND LESS LOCATED AT RANDOM OR 13"Ø AND LESS CENTERED ON DECK LOW FLUTES DO NOT REQUIRE REINFORCING. REF. ***SS021.02***
2. PRIOR TO CONCRETE POUR, OPENINGS SHALL BE BLOCKED OUT w/ DECK LEFT INTACT. AFTER CONCRETE HAS CURED THE BLOCK OUT MAY BE REMOVED AND THE DECK CUT OUT TO THE EDGE OF THE CONCRETE POUR.
3. THE CONTRACTOR SHALL REINFORCE OR SHORE THE DECK AS REQUIRED TO SUPPORT LOADS DURING CONCRETE PLACEMENT.
4. IF DIMENSION "A" IS GREATER THAN 4D1, 4D2 OR 32" WHICHEVER IS LARGER THEN THERE IS NO RESTRICTION ON DIMENSION "B".
5. IF DIMENSION "B" IS GREATER THAN 4D1, 4D2 OR 32" WHICHEVER IS LARGER THEN THERE IS NO RESTRICTION ON DIMENSION "A".
6. IF DIMENSION "A" AND "B" ARE LESS THAN 4D1, 4D2 OR 32" WHICHEVER IS LARGER, THE OPENING GROUP WILL BE CONSIDERED AS A SINGLE HOLE, AND MUST BE REINFORCED AS REQUIRED FOR THE LARGER OPENING.

6 COMPOSITE DECK REINFORCING AT PENETRATIONS < 13" DIA OR LESS

1" = 1'-0"

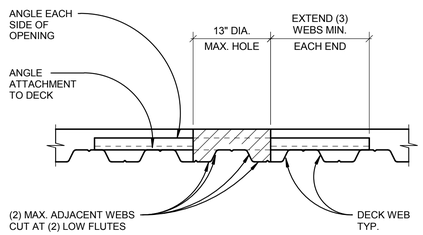

REINFORCING AT HOLES GREATER THAN 6" TO 13" MAX.
LOCATED w/ IMPACTS TO (2) ADJACENT LOW FLUTES

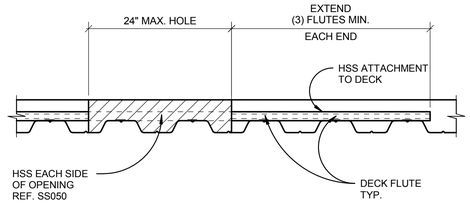

REINFORCING AT HOLES 13" TO 24" MAX.

NOTES:

1. REF. 4 AND 6/S6.7 FOR CRITERIA ON DECK CUTTING PRIOR TO POUR OR AFTER CONCRETE CURING.
2. FOR HSS ATTACHMENT TO DECK REF. 4/S6.7.
3. FOR ANGLE ATTACHMENT TO DECK REF. 6/S6.7.

5 TYP. DECK REINFORCING AT HOLES

1" = 1'-0"

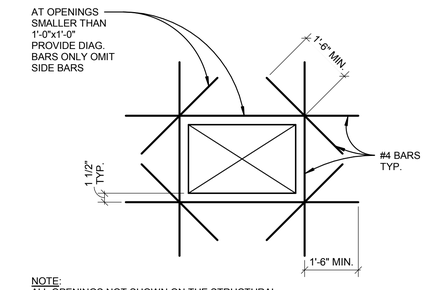

NOTE:
ALL OPENINGS NOT SHOWN ON THE STRUCTURAL DRAWINGS THAT ARE LARGER THAN 1'-0" SQUARE AND ALL MULTIPLE HOLES SPACED CLOSER THAN 3x LARGEST OPENING DIMENSION, SHALL BE SUBMITTED FOR REVIEW TO THE STRUCTURAL ENGINEER.

3 TYP. REINFORCING AT CONC. OVER METAL DECK OPENING

1" = 1'-0"

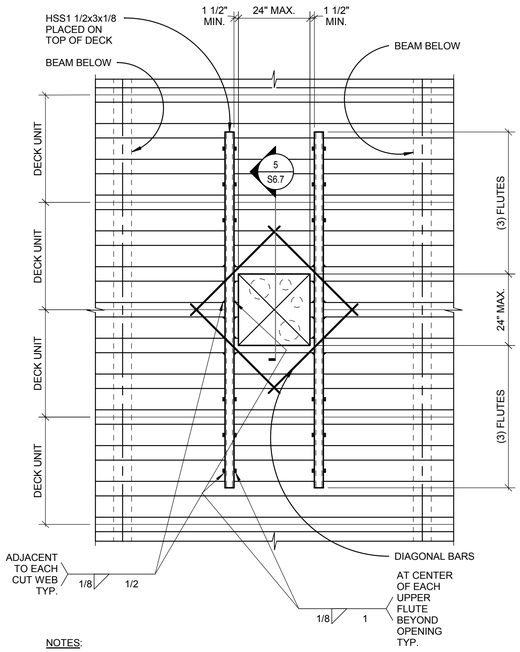

NOTES:

1. REF. 6/S6.7 FOR DIMENSION REQUIREMENTS WHERE ADJACENT HOLES MUST BE CONSIDERED AS ONE OPENING.
2. IF THE OPENING OR GROUP OF OPENINGS OCCURS IN ONE DECKING UNIT, THE OPENING OR OPENING GROUP MAY BE CUT PRIOR TO POURING OF CONCRETE.
3. IF, AS SHOWN IN THE DETAIL ABOVE, THE OPENING OR OPENING GROUP CUTS THROUGH TWO DECK UNITS, THE DECKING SHALL NOT BE CUT UNTIL CONCRETE HAS BEEN PLACED AND CURED.
   a. AT THE TIME OF POURING, SUITABLE SLEEVES OR BULKHEADS SHALL BE PLACED AROUND THE OPENING.
4. WHEN THE MAXIMUM DIMENSION OF AN OPENING OR OPENING GROUP EXCEEDS 24", PLACE HEADER BEAMS AROUND OPENING, NOTIFY ENGINEER FOR DESIGN.
5. FOR DIAGONAL BAR REINFORCING REF. 3/S6.7.
6. FOR OPENING LARGER THAN THOSE SHOWN REF. 1/S6.8 FOR DECK REINFORCING REQUIREMENTS U.N.O.

4 COMPOSITE DECK REINFORCING AT PENETRATIONS > 13" DIA

1" = 1'-0"

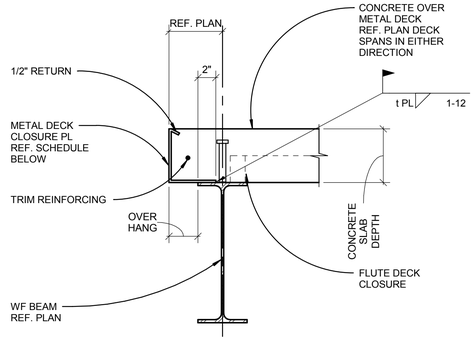

NOTES:

1. WHERE CLADDING, GUARDRAIL, ELEVATOR RAILS OR OTHER ATTACHMENT AT SLAB EDGE OCCUR. REF. TYP. EDGE OF DECK DETAIL 2/S6.5 U.N.O.
2. FOR TRIM REINFORCING REF. 3/S6.7.

EDGE FORM GAUGE

SLAB DEPTH (IN.)	OVERHANG (IN.)		
	≤4	≤8	≤10
≤5 1/2	16	10	10
≤6 1/2	14	10	-
≤7 1/2	14	10	-

1 EDGE OF DECK DETAIL

1 1/2" = 1'-0"

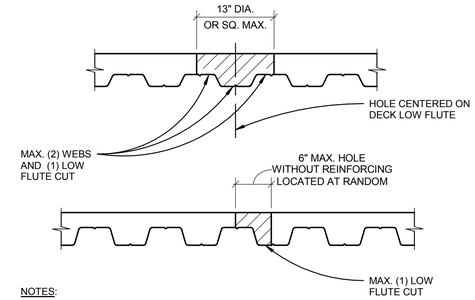

REINFORCING AT CORES TO 18" MAX.

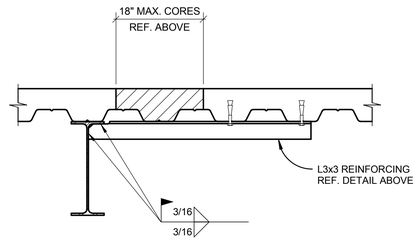

ANGLE REINFORCING AT WF CONFLICT

NOTES:

1. REF. 6/S6.7 FOR DIMENSION REQUIREMENTS WHERE ADJACENT HOLES MUST BE CONSIDERED AS ONE OPENING.
2. REF. 2/S6.7 FOR CORES TO 13" MAX. CENTERED ON DECK LOW FLUTE AND 6"Ø MAX. CORES LOCATED AT RANDOM.

7 TYP. POST-INSTALLED DECK REINFORCING AT HOLES

1" = 1'-0"

NOTES:

1. REF. 4 AND 6/S6.7 FOR OPENINGS THAT DO NOT MEET THE REQUIREMENTS OF THIS DETAIL. REINFORCE ALL OPENINGS THAT IMPACT (2) ADJACENT LOW FLUTES.
2. REF. 6/S6.7 FOR DIMENSION REQUIREMENTS WHERE ADJACENT HOLES MUST BE CONSIDERED AS ONE OPENING.
3. OPENINGS THAT MEET THE REQUIREMENTS OF THIS DETAIL MAY BE FORMED PRIOR TO CONCRETE POUR OR CORE DRILLED AFTER PLACEMENT.

2 MAXIMUM ALLOWABLE DECK OPENING WITHOUT REINFORCING

1" = 1'-0"

BID/PERMIT SET

kpff

REGISTERED PROFESSIONAL ENGINEER
15773
OREGON
JAN. 21, 1983
GERALD L. ABDILLE
EXPIRES 12-31-19

BEAVERTON SCHOOL DISTRICT

STEEL DETAILS
ACMA

S6.7
74-18109-00
03/14/2019
REVISIONS

DLR Group
Architecture Engineering Planning Interiors

© . DLR Group Architecture & Engineering Inc., an Oregon corporation, ALL RIGHTS RESERVED

C:\Users\bradl\Documents\10021800772_bradfrench3417.rvt
3/13/2019 2:52:28 PM

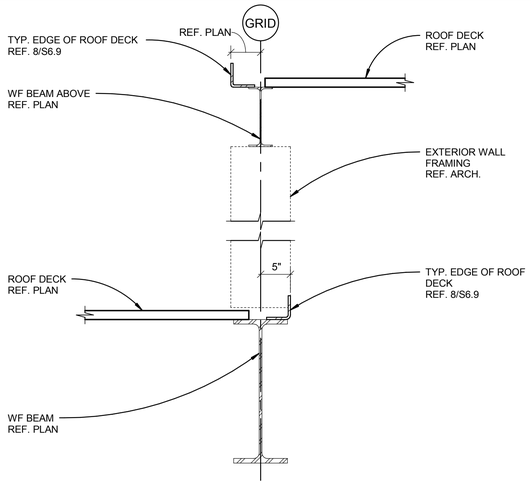

7 WF BEAMS AT ROOF STEP
1" = 1'-0"

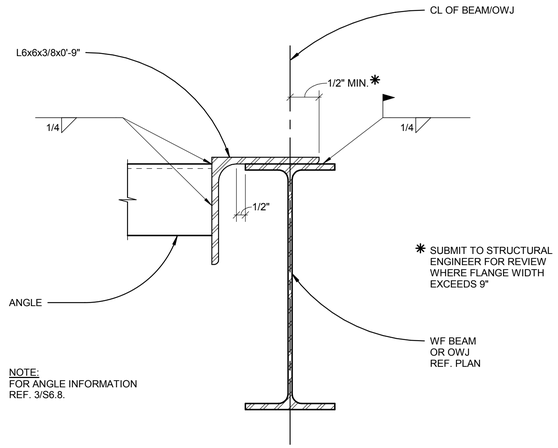

4 TYP. FRAMING AT ROOF DECK OPENING
3" = 1'-0"

OPENINGS WITHOUT REINFORCING:

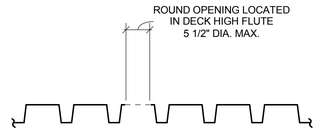

3" - TYPE N ROOF DECK

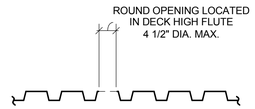

1 1/2" - TYPE HSB ROOF DECK

REINFORCED OPENINGS:

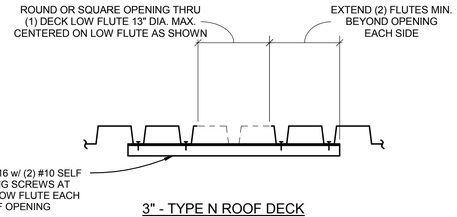

3" - TYPE N ROOF DECK

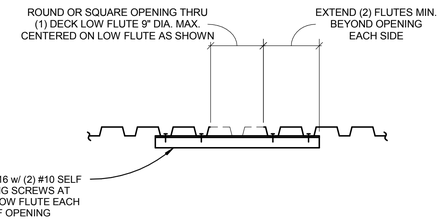

1 1/2" - TYPE HSB ROOF DECK

NOTE:
REF. 3/S6.8 FOR SUB FRAMING AT OPENINGS LARGER THAN THOSE SHOWN OR OPENINGS THROUGH MORE THAN (1) DECK LOW FLUTE.

2 TYP. ROOF DECK REINFORCING AT HOLES
1" = 1'-0"

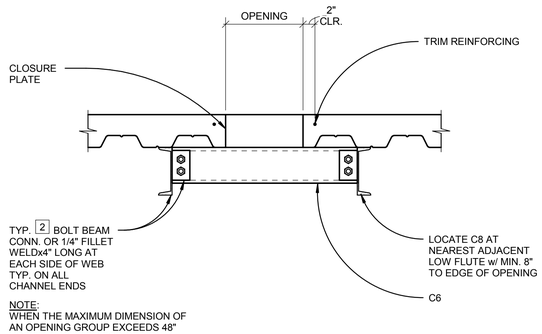

SECTION A-A

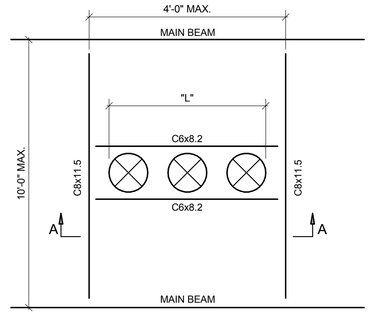

NOTES:

1. FOR TRIM REINFORCING REF. 3/S6.7.
2. FOR CLOSURE PLATE REF. 1/S6.7.
3. IF "L" <24 CONSIDER THE COMBINED HOLES AS ONE AND STRENGTHEN REF. 4/S6.7.
4. AT (E) FLOOR DECKS FASTEN CHANNEL FLANGES w/ 3/8"Øx2 1/2" EMBEDMENT ANCHORS @ 24" o.c. TYP.

PARTIAL FRAMING PLAN

1 COMPOSITE DECK REINFORCING AT 48" MAX. FORMED OPENINGS
1" = 1'-0"

8 WF BEAMS AT ROOF STEP
1" = 1'-0"

5 TYP. DETAIL AT ROOF DECK OPENING
3" = 1'-0"

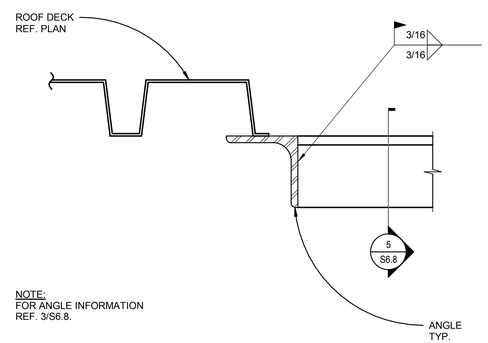

6 TYP. FRAMING AT ROOF DECK OPENING
3" = 1'-0"

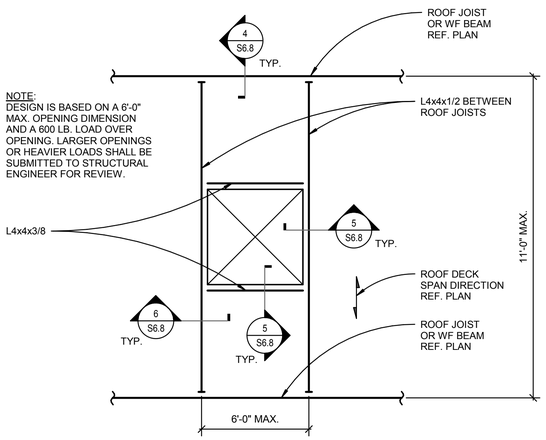

3 TYP. FRAMING AT ROOF DECK OPENING
1" = 1'-0"

BID/PERMIT SET

kpff

STRUCTURAL REGISTERED PROFESSIONAL ENGINEER 15773 OREGON JAN. 21, 1983 JERALD L. ABDILLA

EXPIRES 12-31-19

STEEL DETAILS
ACMA
BEAVERTON SCHOOL DISTRICT

S6.8
74-18109-00
03/14/2019
REVISIONS

DLR Group
Architecture Engineering Planning Interiors

© DLR Group Architecture & Engineering Inc., an Oregon corporation, ALL RIGHTS RESERVED

C:\Users\bradf\Documents\10021800772_bradfrench3417.rvt
3/13/2019 2:52:30 PM

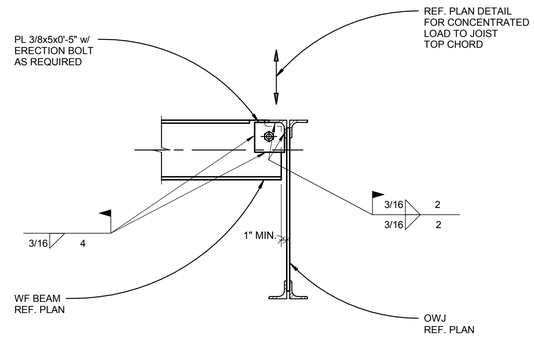

6 TYP. WF CONNECTION TO ROOF AT OWJ'S

1" = 1'-0"

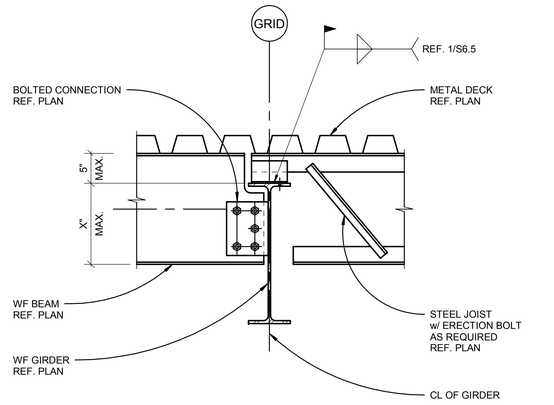

3 TYP. JOIST/BEAM TO GIRDER CONNECTION

1" = 1'-0"

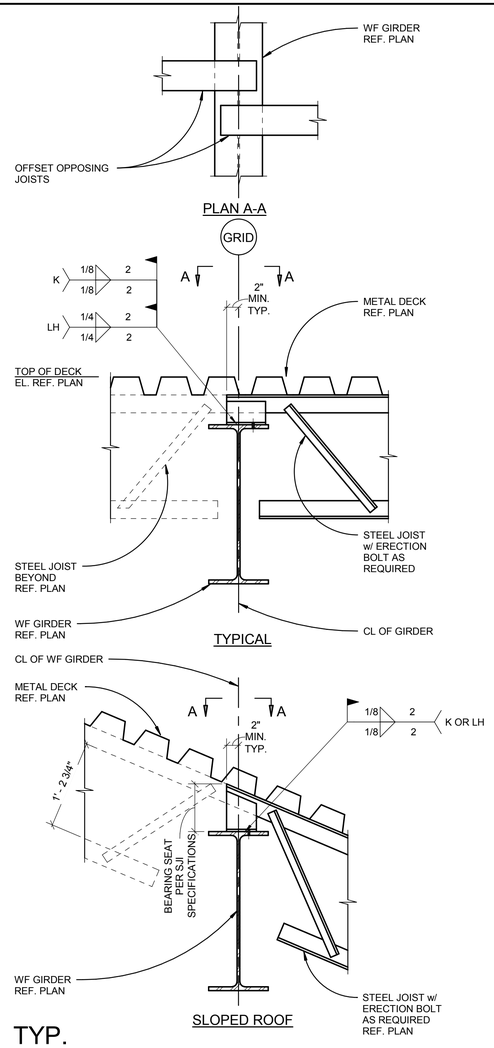

1 TYP. JOIST TO GIRDER CONNECTION

1" = 1'-0"

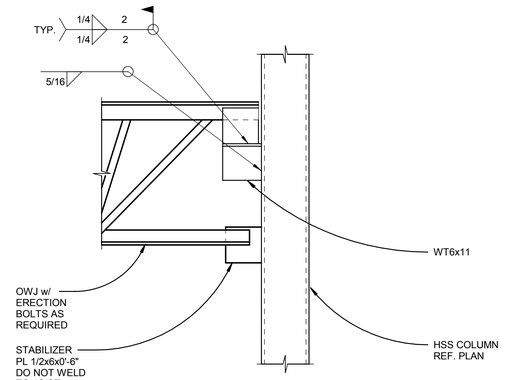

7 OWJ AT COLUMN FACE

1" = 1'-0"

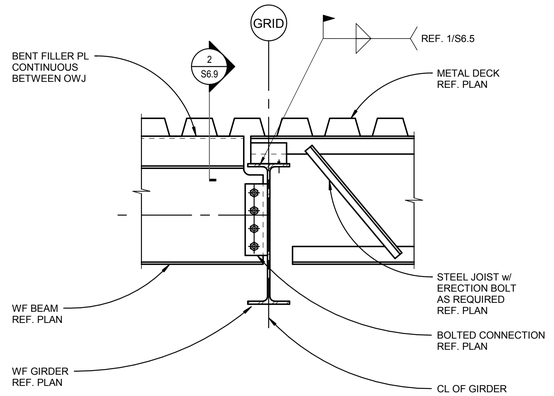

4 TYP. JOIST/BEAM TO GIRDER CONNECTION

1" = 1'-0"

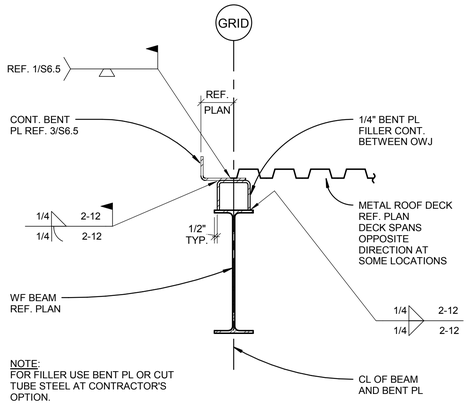

8 TYP. ROOF DECK EDGE AT OWJ FRAMING

1" = 1'-0"

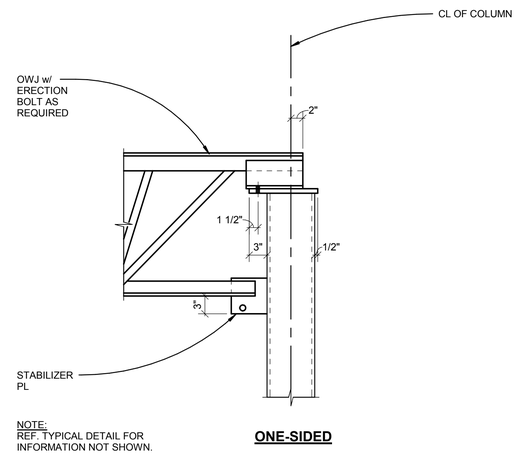

5 TYP. JOIST CONNECTION AT COLUMN

1" = 1'-0"

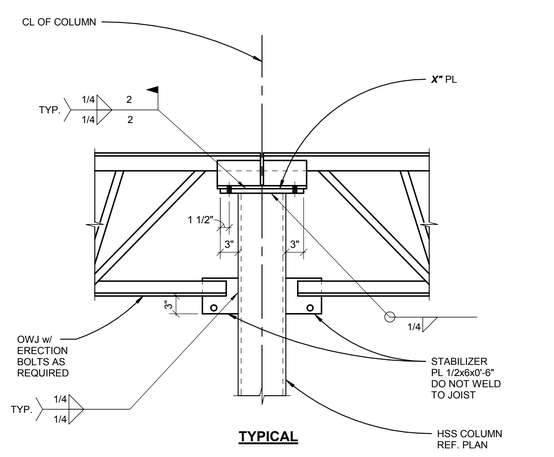

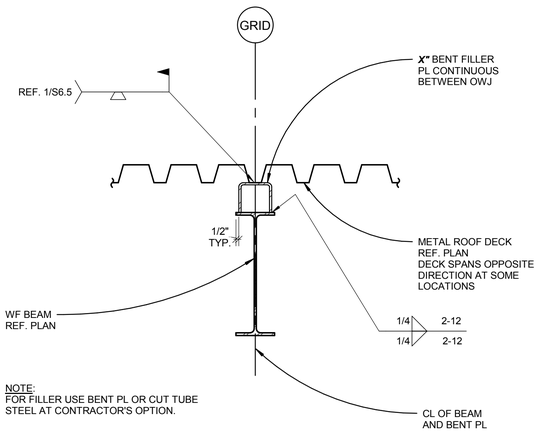

2 TYP. ROOF DECK DRAG CONNECTION AT OWJ FRAMING

1" = 1'-0"

BID/PERMIT SET

kpff

STRUCTURAL ENGINEER
REGISTERED PROFESSIONAL
15773
OREGON
JAN. 21, 1983
GERALD L. ABDIE
EXPIRES 12-31-19

STEEL JOIST DETAILS
ACMA
BEAVERTON SCHOOL DISTRICT

S6.9
74-18109-00
03/14/2019
REVISIONS

DLR Group
Architecture Engineering Planning Interiors

© DLR Group Architecture & Engineering Inc., an Oregon corporation, ALL RIGHTS RESERVED

C:\Users\brad\Documents\18021800772_bradfrench3417.rvt
3/13/2019 2:52:30 PM

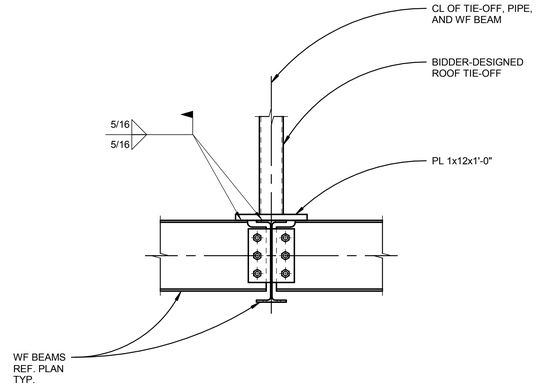

NOTE:
DESIGN BASED ON 5000 LBS.
ULTIMATE LOAD IN ANY DIRECTION.

1 ROOF TIE-OFF DETAIL
1" = 1'-0"

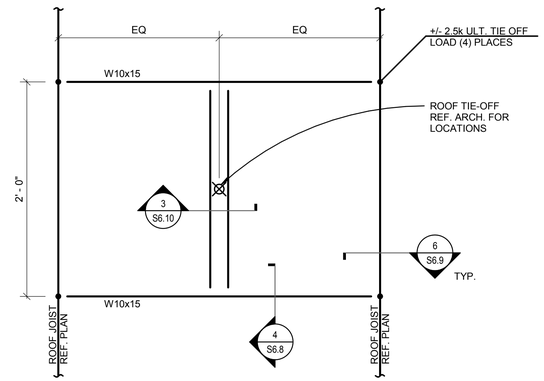

2 ROOF TIE-OFF AT OWJ
1 1/2" = 1'-0"

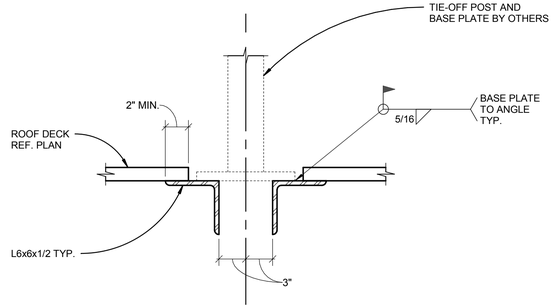

NOTE:
DESIGN IS BASED ON 5000 LBS.
ULT. LOAD AT A MAX. HEIGHT OF
2'-0" IN ANY DIRECTION.

3 ROOF TIE-OFF DETAIL
1 1/2" = 1'-0"

BID/PERMIT SET

kpff

STRUCTURAL REGISTERED PROFESSIONAL ENGINEER 15773 OREGON JAN. 21, 1983 JERALD L ABDIE

EXPIRES 12-31-19

STEEL DETAILS
ACMA
BEAVERTON SCHOOL DISTRICT

S6.10
74-18109-00
03/14/2019
REVISIONS

DLR Group
Architecture Engineering Planning Interiors

© DLR Group Architecture & Engineering Inc., an Oregon corporation, ALL RIGHTS RESERVED

C:\Users\brad\Documents\10021800772_bradfrench3417.rvt
3/13/2019 2:52:31 PM

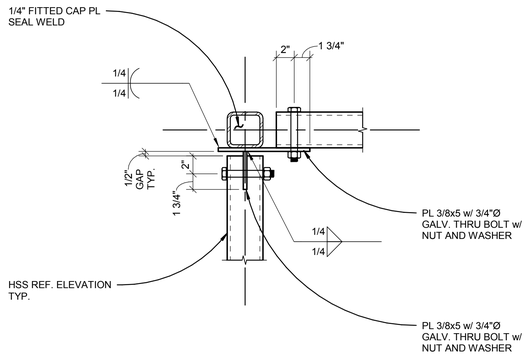

7 MECHANICAL SCREEN CONNECTION AT CORNER

1 1/2" = 1'-0"

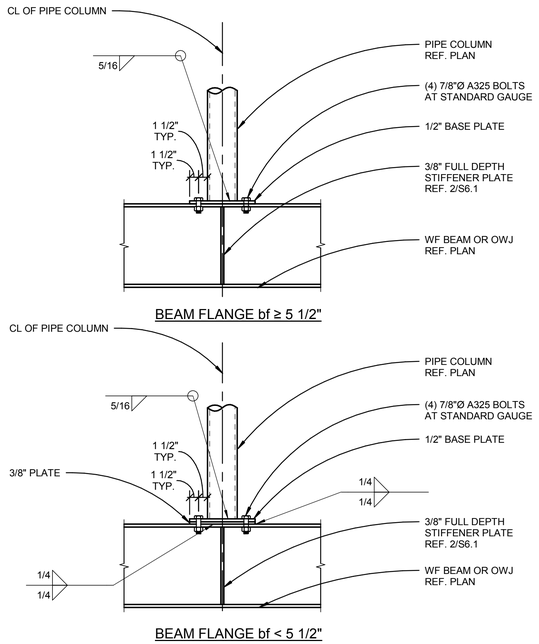

4 PIPE COLUMN CONNECTION TO WF BEAM

1" = 1'-0"

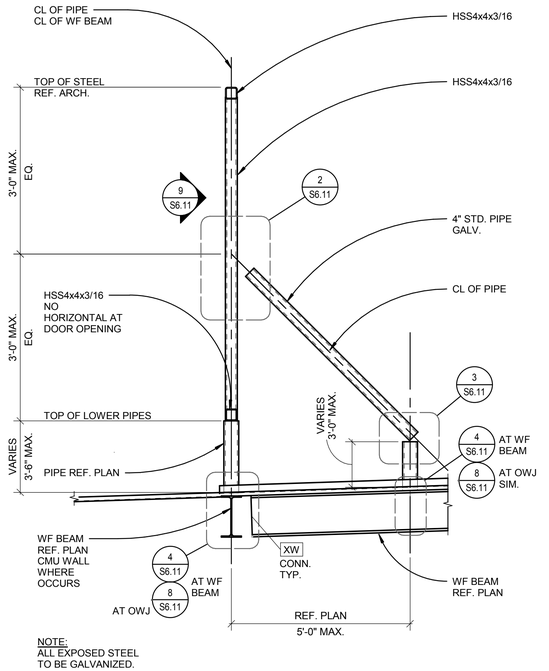

NOTE:
ALL EXPOSED STEEL
TO BE GALVANIZED.

1 MECHANICAL SCREEN SECTION

1/2" = 1'-0"

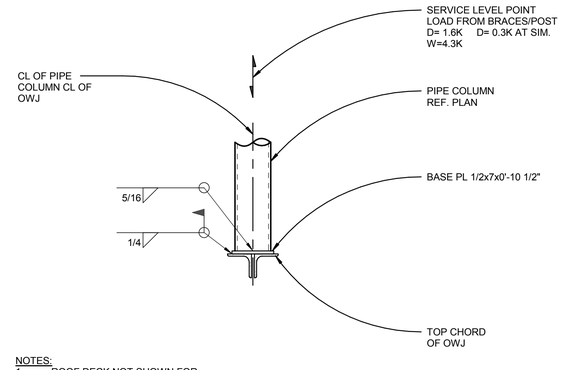

NOTES:
1. ROOF DECK NOT SHOWN FOR CLARITY.
2. DESIGN OWJ FOR LOADS SHOWN IN DETAIL U.N.O. ON PLAN.

8 COLUMN CONNECTION TO OWJ

1" = 1'-0"

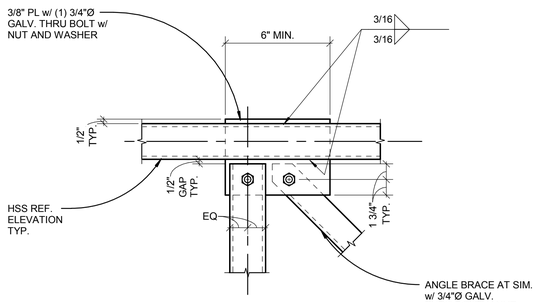

5 MECHANICAL SCREEN POST TO BEAM

1 1/2" = 1'-0"

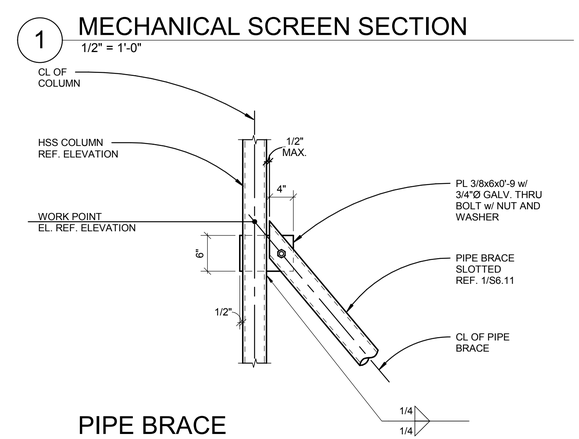

2 PIPE BRACE CONNECTION TO PIPE COLUMN

1" = 1'-0"

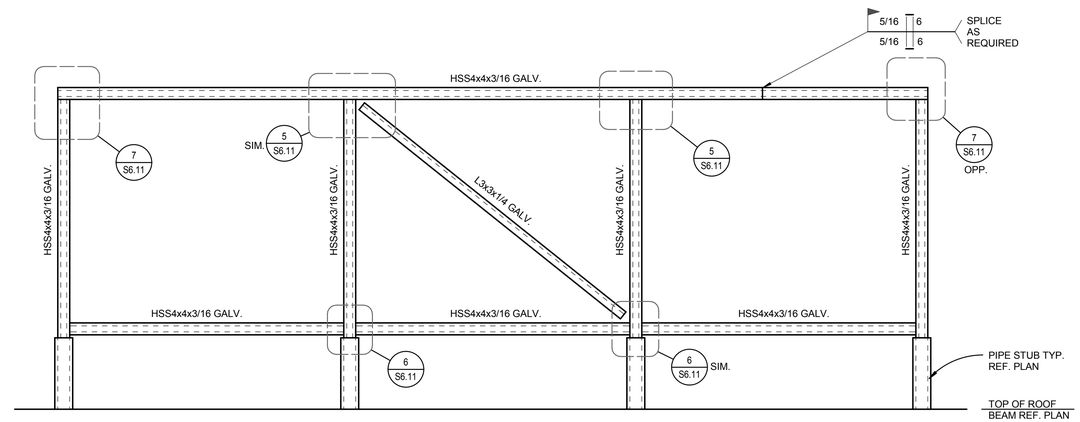

9 MECHANICAL SCREEN ELEVATION

1/2" = 1'-0"

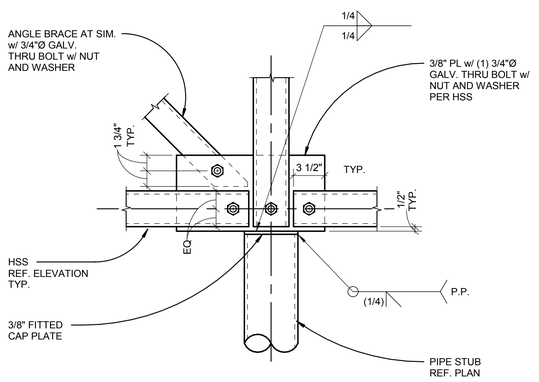

6 HSS PIPE CONNECTION TO LOWER PIPE COLUMN

1 1/2" = 1'-0"

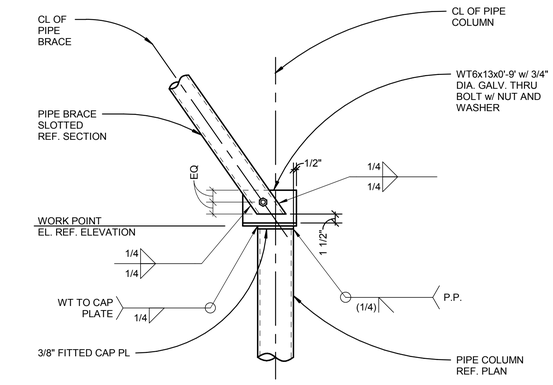

3 PIPE BRACE CONNECTION TO PIPE COLUMN

1" = 1'-0"

BID/PERMIT SET

kpff

STRUCTURAL ENGINEER
REGISTERED PROFESSIONAL
15773
OREGON
JAN. 21, 1983
GERALD L. ABDILE
EXPIRES 12-31-19

SCREEN WALL DETAILS
ACMA
BEAVERTON SCHOOL DISTRICT

S6.11
74-18109-00
03/14/2019
REVISIONS

DLR Group
Architecture Engineering Planning Interiors

© , DLR Group Architecture & Engineering Inc., an Oregon corporation, ALL RIGHTS RESERVED

C:\Users\braid\Documents\10021800772_braidfrench3417.rvt
3/13/2019 2:52:33 PM

MECHANICAL SYMBOLS

HVAC

- DIFFUSER (SUPPLY)
- DIFFUSER (SUPPLY)
- GRILLE (RETURN)
- WALL REGISTER
- SLOT DIFFUSER
- SUPPLY ARROW
- RETURN ARROW
- EXHAUST ARROW
- 12"x12" D-1 / 200 CFM — RECTANGULAR DIFFUSER INDICATION SHOWING CFM
- 12" Ø D-1 / 200 CFM — ROUND DIFFUSER INDICATION SHOWING CFM
- 12"x12" G-1 / 200 CFM — RECTANGULAR GRILLE INDICATION SHOWING CFM
- 12"x12" R-1 / 200 CFM — RECTANGULAR REGISTER INDICATION SHOWING CFM
- F — FIRE DAMPER
- S — SMOKE DAMPER
- FS — FIRE/SMOKE DAMPER
- BD — BACKDRAFT DAMPER
- GD — GRAVITY DAMPER
- RD — BARAMETRIC RELIEF DAMPER
- PR — PRESSURE REDUCING DAMPER DAMPER
- M — MOTORIZED DAMPER
- VD — VOLUME DAMPER
- VOLUME DAMPER
- OPPOSED DAMPER
- PARALLEL DAMPER
- SECURITY BAR
- T — THERMOSTAT - WALL MOUNTED
- T — THERMOSTAT - CEILING MOUNTED
- C_O — CARBON MONOXIDE SENSOR - WALL MOUNTED
- C_O — CARBON MONOXIDE SENSOR - CEILING MOUNTED
- C_{O2} — CARBON DIOXIDE SENSOR - WALL MOUNTED
- C_{O2} — CARBON DIOXIDE SENSOR - CEILING MOUNTED
- H — HUMIDISTAT - WALL MOUNTED
- H — HUMIDISTAT - WALL MOUNTED
- N_{O2} — NITROGEN DIOXIDE SENSOR - WALL MOUNTED
- N_{O2} — NITROGEN DIOXIDE SENSOR - WALL MOUNTED
- S — TEMPURATURE SENSOR - WALL OR DUCT MOUNTED
- S — TEMPURATURE SENSOR - CEILING MOUNTED
- P — PRESSURE SENSOR - WALL OR DUCT MOUNTED
- P — PRESSURE SENSOR - CEILING MOUNTED
- OC — OCCUPANCY SENSOR
- OW — OPERABLE OPENING SENSOR

- 24"x12" — TYPICAL DUCT - SIZE AS INDICATED (WIDTH / DEPTH) SIZE INDICATES FREE AREA
- MITERED ELBOW WITH VANES
- MITERED ELBOW WITHOUT VANES
- RADIUS ELBOW
- TEE WITH VANES
- TEE WITH RADIUS
- ROUND DUCT UP
- SUPPLY DUCT UP
- RETURN DUCT UP
- EXHAUST DUCT UP
- ROUND DUCT DOWN
- SUPPLY DUCT DOWN
- RETURN DUCT DOWN
- EXHAUST DUCT DOWN
- FLEXIBLE CONNECTION
- TRANSFER DUCT
- SA — SUPPLY AIR - SINGLE LINE
- RA — RETURN AIR - SINGLE LINE
- EA — EXHAUST AIR - SINGLE LINE
- OA — OUTSIDE AIR - SINGLE LINE
- TA — TRANSFER AIR - SINGLE LINE
- LTD — TRANSFER AIR - SINGLE LINE
- SINGLE LINE REDUCER
- SINGLE LINE FLEX DUCT
- NEW TO EXISTING CONNECTION POINT
- AFMS — AIRFLOW MEASUREMENT STATION
- DP — DIFFERENTIAL PRESSURE SENSOR (DUCT MOUNTED)
- SP — STATIC PRESSURE SENSOR (DUCT MOUNTED)
- B — EMERGENCY BOILER SHUT OFF SWITCH
- SP — STATIC PRESSURE SENSOR
- D — DUCT SMOKE DETECTOR OR SWITCH
- G R — RED LIGHT GREEN LIGHT INDICATOR

PIPING

- HWS — LOW TEMP HOT WATER SUPPLY
- HWR — LOW TEMP HOT WATER RETURN
- GWS — WELLFIELD LOOP SUPPLY (GSHP)
- GWR — WELLFIELD LOOP RETURN (GSHP)
- HTWS — HIGH TEMP HOT WATER SUPPLY
- HTWR — HIGH TEMP HOT WATER RETURN
- MTWS — MEDIUM TEMP HOT WATER SUPPLY
- MTWR — MEDIUM TEMP HOT WATER RETURN
- LPS — LOW PRESSURE STEAM SUPPLY
- LPR — LOW PRESSURE STEAM RETURN
- HPS — HIGH PRESSURE STEAM SUPPLY
- HPR — HIGH PRESSURE STEAM RETURN
- FOV — FUEL OIL VENT
- FOS — FUEL OIL SUPPLY
- FOR — FUEL OIL RETURN
- CD — CONDENSATE DRAIN
- CHWS — CHILLED WATER SUPPLY
- CHWR — CHILLED WATER RETURN
- HCS — HOT/CHILLED WATER SUPPLY
- HCR — HOT/CHILLED WATER RETURN
- CS — CONDENSER WATER SUPPLY
- CR — CONDENSER WATER RETURN
- RS/RL — REFRIGERANT LINE SET INCLUDES REFRIGERANT LIQUID, REFRIGERANT SUCTION & REFRIGERANT HOT GAS
- RHG — REFRIGERANT HOT GAS
- RH — REFRIGERANT HEAT RECOVERY
- RD — REFRIGERANT DISCHARGE
- WLS — WATER LOOP SUPPLY
- WLR — WATER LOOP RETURN
- G — GAS

PLUMBING

- CW — DOMESTICE COLD WATER OR DOMESTIC COLD WATER
- 110 HW — 110°F DOMESTIC HOT WATER
- 140 HW — 140°F DOMESTIC HOT WATER
- DOMESTIC HOT WATER (GENERIC)
- 110 HWC — 110°F DOMESTIC HOT WATER RECIRULATING
- 140 HWC — 140°F DOMESTIC HOT WATER RECIRCULATING
- DOMESTIC HOT WATER RECIRC (GENERIC)
- SD — STORM DRAIN ABOVE FLOOR
- SD — STORM DRAIN BELOW FLOOR
- OSD — OVERFLOW STORM DRAIN ABOVE FLOOR
- OSD — OVERFLOW STORM DRAIN ABOVE FLOOR
- W — SANITARY WASTE ABOVE FLOOR
- W — SANITARY WASTE BELOW FLOOR
- V — VENT
- VBF — VENT BELOW FLOOR
- VAC — VACUUM
- LV — LABORATORY VACUUM
- MV — MEDICAL VACUUM
- N — NITROGEN
- O2 — OXYGEN
- SCW — SOFT COLD WATER
- SHW — SOFT HOT WATER
- T — TEMPERED WATER
- DI — DISTILLED WATER
- DE — DEIONIZED WATER
- CD — CONDENSATE DRAIN
- LS — LAWN SPRINKLER
- GW — GREASE WASTE ABOVE FLOOR
- GW — GREASE WASTE BELOW FLOOR
- GV — GREASE VENT
- OW — OIL WASTE ABOVE FLOOR
- OW — OIL WASTE BELOW FLOOR
- AW — ACID WASTE BELOW FLOOR
- AW — ACID WASTE ABOVE FLOOR
- AV — ACID VENT
- CO2 — CARBON DIOXIDE
- N2O — NITROUS OXIDE
- LO2 — NITROUS OXIDE
- A — COMPRESSED AIR
- LA — LABORATORY COMPRESSED AIR
- MA — MEDICAL COMPRESSED AIR

FIRE PROTECTION

- F — FIRE PROTETION WATER SUPPLY
- SM — SPRINKLER MAIN
- ALARM VALVE, WET
- ALARM VALVE, DRY
- FIRE PROTECTION RISER
- FIRE DEPARTMENT CONNECTION
- SPRINKLER HEAD, PENDANT
- SPRINKLER HEAD, UPRIGHT
- SPRINKLER HEAD, SIDE WALL
- FS — FLOW SWITCH
- PS — PRESSURE SWITCH
- OS&Y VALVE
- OS&Y VALVE (INDICATING)

VALVES AND FITTINGS

- CO — CLEAN OUT
- WCO — WALL CLEAN OUT
- FCO — FLOOR CLEAN OUT
- GCO — GRADE CLEAN OUT (DOUBLE CLEAN OUT)
- FLOOR DRAIN / FLOOR SINK
- ROOF DRAIN / OVERFLOW ROOF DRAIN
- XX — RISER ID
- DOWNSPOUT NOZZLE
- WALL HYDRANT
- HOSE BIB
- ALIGNMENT GUIDE
- PIPE ANCHOR
- PIPE EXPANSION JOINT
- PIPE CAP
- PIPE UP
- PIPE DOWN
- PIPE TEE, UP
- PIPE TEE, DOWN
- UNION
- DIRECTION OF PIPE PITCH
- AQUASTAT
- X — WATER HAMMER ARRESTER
- A E — ANESTHESIA EVACUATION
- A — MEDICAL COMPRESSED AIR OUTLET
- D — DEINONIZED WATER OUTLET
- D S — DISTILLED WATER OUTLET
- G — NATURAL GAS OUTLET
- N — NITROGEN OUTLET
- N O — NITOUS OXIDE OUTLET
- OXYGEN OUTLET
- V — VACUUM OUTLET
- FS — NEW TO EXISTING CONNECTION POINT
- FLOW SWITCH
- EXPANSION LOOP
- BALANCING VALVE
- BALANCING VALVE WITH METERING POINTS
- BALL VALVE
- BUTTERFLY VALVE
- VALVE (GENERIC)
- CHECK VALVE
- CONCENTRIC REDUCER
- ECCENTRIC REDUCER
- STEAM TRAP
- FLEXIBLE CONNECTION
- FLOW DIRECTION
- GATE VALVE
- GLOBE VALVE
- MANUAL AIR VENT
- AUTOMATIC AIR VENT
- PLUG VALVE
- PRESSURE GAUGE
- SOLENOID VALVE
- ANGLE VALVE
- AUTOMATIC CONTROL VALVE 2-WAY
- AUTOMATIC CONTROL VALVE 3-WAY
- AUTOMATIC FLOW CONTROL VALVE
- STRAINER
- PT — PRESSURE AND TEMPURATURE TEST PORT
- THERMOMETER
- PUMP (GENERIC)
- PRESSURE REDUCING VALVE (WATER SYSTEMS) PRESSURE REGULATING VALVE (GAS SYSTEMS)
- RELIEF VALVE
- FLOW MEASURING DEVICE
- REDUCED PRESSURE ZONE BACKFLOW PREVENTER

MECHANICAL/PLUMBING NOTES

1. REFER TO ARCHITECTURAL AND CODE PLANS FOR RATED WALLS AND PARTITIONS.
2. REFER TO ARCHITECTURAL REFLECTED CEILING PLANS FOR EXACT LOCATIONS OF CEILING DIFFUSERS, REGISTERS, AND GRILLES.
3. VERIFY LOCATIONS OF THERMOSTATS WITH ARCHITECT AND OWNER PRIOR TO INSTALLATION.
4. COORDINATE PIPING/DUCT PENETRATIONS THROUGH WALLS, ROOFS, OR CEILINGS WITH OTHER TRADES.
5. INSTALL EXPANSION COMPENSATORS, GUIDES, AND ANCHORS PER MANUFACTURERS RECOMMENDATIONS.
6. CONTRACTOR IS RESPONSIBLE FOR FIELD VERIFYING METHODS OF BRINGING IN NEW MECHANICAL EQUIPMENT THROUGH BUILDING INTO MECHANICAL ROOMS OR OTHER INTERIOR SPACE IF REQUIRED. COORDINATE WITH CONSTRUCTION SCHEDULE.
7. REFERENCE STRUCTURAL DETAILS FOR PIPING/EQUIPMENT PLACEMENT, INSTALLATION.
8. THE SUPPLY RUNOUT TO A DIFFUSER IS NOTED BY THE NECK SIZE GIVEN ON PLAN UNLESS OTHERWISE NOTED.
9. COORDINATE PIPE ROUTING TO AVOID RUNNING PIPING ABOVE ELECTRICAL WIRING AND EQUIPMENT.
10. PLANS DO NOT INCLUDE ALL OFFSETS FOR COORDINATION WITH DUCT, PIPING, LIGHTING, AND STRUCTURAL SYSTEMS. PROVIDE ALLOWANCES FOR REQUIRED OFFSETS.
11. VARIABLE FREQUENCY DRIVES (VFD'S) TO BE FURNISHED BY DIVISION 23.
12. ALL BRANCHES FROM MAINS ARE TO HAVE 45 DEGREE FITTINGS (NO 90 DEGREES SPIN-IN'S OR CONICAL TAPS). PROVIDE LATERALS, RADIUS FITTINGS, AS SHOWN.
13. ALL TRANSFER AIR DUCTS TO BE INTERNALLY LINED PER SPECIFICATION.
14. PROVIDE VOLUME DAMPERS TO ALL CONNECTED REGISTERS, GRILLES, AND DIFFUSERS. PROVIDE VOLUME DAMPERS ON PLENUM RETURN MAINS.
15. MECHANICAL CONTRACTOR IS RESPONSIBLE FOR ALL REMOVING, CUTTING, REINSTALLING, PATCHING AND PLACEMENT OF ALL EXISTING BUILDING STRUCTURE, SURFACES, AND FINISHES (THAT ARE TO REMAIN) REQUIRED TO COMPLETE ALL WORK STATED IN THE CONTRACT DOCUMENTS.
16. SEE FIRE PROTECTION DRAWINGS FOR ROUTING OF FIRE PROTECTION MAINS AND COORDINATE WITH HVAC AND PLUMBING MAINS.
17. PROVIDE SHEETMETAL BOX OVER EXHAUST AND RETURN GRILLES WHERE DUCTS OF SMALLER SIZE CONNECT TO GRILLE.
18. SIZE AND ROUTE REFRIGERANT PIPING FOR COOLING EQUIPMENT PER MANUFACTURER RECOMMENDATIONS.
19. WHEN MOUNTING OR LOCATING EQUIPMENT, COORDINATE WITH ALL TRADES TO ALLOW REQUIRED SPACE NEEDED FOR COIL PULL, FILTER PULL, EQUIPMENT REMOVAL WITHOUT PIPE MAIN REMOVAL, ETC. TO FACILITATE REMOVAL OF THE EQUIPMENT IN THE FUTURE.
20. PIPING SHALL NOT BE SUPPORTED FROM OTHER PIPING, CONDUIT, EQUIPMENT, OR DUCTWORK.
21. PROVIDE ALL MATERIALS AND EQUIPMENT AND PERFORM ALL LABOR REQUIRED TO INSTALL A COMPLETE AND OPERABLE PLUMBING SYSTEM AS INDICATED ON THE DRAWINGS AND AS SPECIFIED AND REQUIRED BY CODE.
22. RUN ALL WASTE AND VENT PIPING AT 1/4" PER FOOT SLOPE UNLESS OTHERWISE NOTED. HORIZONTAL VENT PIPING SHALL BE GRADED TO DRAIN BACK TO THE WASTE PIPE BY GRAVITY. 2" UNDERGROUND WASTE PIPING SHALL BE RUN AT 1/4" PER FOOT SLOPE.
23. ELEVATIONS SHOWN ARE TO THE INVERT OF ALL PIPING BASED ON ARCHITECTURAL ELEVATION OF FINISHED FLOORS AS INDICATED ON THE ARCHITECTURAL PLANS UNLESS OTHERWISE NOTED.
24. ADJUST SEWER INVERTS TO KEEP TOPS OF PIPES IN LINE WHERE PIPE SIZE CHANGES.
25. PROVIDE SHUT-OFF VALVES IN ALL DOMESTIC WATER PIPING SYSTEM BRANCHES IN WHICH BRANCH PIPING SERVES TWO OR MORE FIXTURES.
26. INSTALL PIPING SO THAT ALL VALVES, STRAINERS, UNIONS, TAPS, FLANGES, AND OTHER APPURTENANCES REQUIRING ACCESS ARE ACCESSIBLE.
27. WHERE DOMESTIC COLD AND HOT WATER PIPING DROPS INTO A CHASE THE SIZE SHOWN FOR THE PIPE DROPS SHALL BE USED TO THE LAST FIXTURE.
28. INSTALL ALL PIPING WITHOUT FORCE OR SPRINGING.
29. ALL PIPING SHALL CLEAR DOORS AND WINDOWS.
30. ALL PLUMBING PIPING SHALL SLOPE TO LOW POINTS. PROVIDE HOSE END DRAIN VALVES AT THE BOTTOM OF ALL RISERS AND LOW POINTS.
31. UNIONS AND OR FLANGES SHALL BE INSTALLED AT EACH PIECE OF EQUIPMENT, IN BYPASSES, AND IN LONG RUNS (OVER 100 FEET) TO PERMIT DISASSEMBLY FOR ALTERATION AND REPAIRS.
32. ALL VALVES SHALL BE ADJUSTED FOR SMOOTH AND EASY OPERATION.
33. ALL VALVES (EXCEPT CONTROL VALVES) SHALL BE FULL SIZE OF PIPE BEFORE REDUCING SIZE TO MAKE CONNECTIONS TO EQUIPMENT AND CONTROLS.
34. PROVIDE CHAIN WHEEL OPERATORS FOR ALL VALVES IN EQUIPMENT ROOMS MOUNTED GREATER THAT 7'-0" ABOVE FLOOR LEVEL.
35. PROVIDE ALL PLUMBING FIXTURES AND EQUIPMENT WITH ACCESSIBLE STOPS.
36. PROVIDE CLEANOUTS IN SANITARY AND STORM DRAINAGE SYSTEMS AT THE ENDS OF RUNS, AT CHANGES IN DIRECTION, NEAR THE BASE OF STACKS, EVERY 100 FEET IN HORIZONTAL RUNS AND ELSEWHERE AS INDICATED.
37. ALL BALANCING VALVES AND BUTTERFLY VALVES SHALL BE PROVIDED WITH POSITION INDICATORS AND MAXIMUM ADJUSTABLE STOPS.
38. ALL VALVES SHALL BE INSTALLED SO THAT THE VALVE REMAINS IN SERVICE WHEN EQUIPMENT OR PIPING ON EQUIPMENT SIDE OF VALVE IS REMOVED.
39. ALL PIPING WORK SHALL BE COORDINATED WITH ALL TRADES.
40. PROVIDE FLEXIBLE CONNECTION (SIZE SAME AS LAST INDICATED) IN ALL PIPING SYSTEMS CONNECTED TO PUMPS AND OTHER EQUIPMENT WHICH REQUIRE VIBRATION ISOLATION. FLEXIBLE CONNECTIONS SHALL BE PROVIDED AS CLOSE TO EQUIPMENT AS POSSIBLE OR AS INDICATED ON THE DRAWINGS.
41. SEE PLUMBING RISER DIAGRAMS FOR PIPE SIZING NOT SHOWN ON SHEETS.
42. SEE PLUMBING FIXTURE SCHEDULE FOR FIXTURE CONNECTION AND RUN OUT SIZES.
43. PLUMBING CONTRACTOR TO ENSURE THAT CLEANOUT (FCO AND WALL) LOCATIONS DO NOT REST BEHIND OR BELOW CASEWORK.
44. INSTALL WATER HAMMER ARRESTORS FOR MULTIPLE TOILET INSTALLATIONS AND WHERE INDICATED.

GENERAL SYMBOLS

- ? / ? — DETAIL NUMBER / CROSS REFERENCE / SHEET ON WHICH DRAWN
- SIM — SIMILAR OR TYPICAL REFERENCE
- DETAIL OR WALL SECTION
- SIMILAR OR TYPICAL REFERENCE
- DETAIL REFERENCE
- ? — LEGEND OR KEY NOTE
- ? — REVISION NUMBER
- TYPE - CFM — GRILLE, REGISTER OR DIFFUSER

COMMISSIONING REQUIREMENTS

1. PROJECT SHALL BE COMMISSIONED IN ACCORDANCE WITH THE REQUIREMENTS OF OREGON ENERGY CODE AND AS INDICATED.
2. CONTRACTOR SHALL ACTIVELY PARTICIPATE IN THE COMMISSIONING PROCESS AND ALL WORK SHALL BE IN CONFORMANCE WITH COMMISSIONING REQUIREMENTS. REFERENCE SPECIFICATION SECTION 019113 FOR COMMISSIONING REQUIREMENTS.

DEFERRED SUBMITTALS

1. FIRE PROTECTION
2. HANGERS AND SUPPORTS FOR ALL EQUIPMENT, PIPING & DUCTWORK

APPLICABLE CODE

- 2014 OREGON ENERGY EFFICIENCY SPECIALTY CODE
- 2014 OREGON MECHANICAL SPECIALTY CODE
- 2017 OREGON PLUMBING SPECIALTY CODE
- 2014 OREGON FIRE CODE
- 2012 INTERNATIONAL FUEL GAS CODE
- 2016 NATIONAL FIRE PROTECTION ASSOCIATION 13

PROJECT NARRATIVE:

THE BUILDING HAS NINE (9) ROOF TOP UNITS (RTU). ALL RTUS INCLUDE DIRECT EXPANSION (DX) COOLING WITH NATURAL GASS FURNACE HEATING AND ENERGY RECOVERY WHEELS WHERE REQUIRED BY CODE. AIR IS DISTRIBUTED VIA VAV WITH HYDRONIC REHEAT TO SERVE THE SPACES. CO2 SENSORS ARE USED WHERE REQUIRED BY CODE IN SPACES WITH LARGE CONGREGATION AREAS LIKE THE COMMONS. 55F IS USED AS THE DESIGN TEMPERATURE SETPOINT FOR THE VAV BOXES. HYDRONIC HEAT IS GENERATED VIA GAS FIRED CONDENSING BOILERS COUPLED WITH A PRIMARY-SECONDARY PUMP SYSTEM. THERE IS FULL REDUNDANCY PROVIDED IN THE PUMPING AND ON THE CONDENSING BOILERS. THE RTU HEATING COILS ARE USED TO RECIRCULATE HEATING AIR FOR MORNING WARMUP AND NIGHT SETBACK AND ALLOW THE PUMPS TURN DOWN WHEN THE SCHOOL IS IN UNOCCUPIED OPERATION.

A DESIGN DAY OF 17F IS USED FOR HEATING, 95F FOR COOLING. CLASSROOM/OFFICE SPACES SHALL BE CONTROLLED BETWEEN 70-74F; COMMONS SHALL BE HEATED TO 68F AND COOLED TO 75F. HUMIDITY IS NOT ACTIVELY CONTROLLED, HOWEVER, THE ENERGY WHEELS WILL PROVIDE SOME HUMIDIFICATION/DEHUMIDIFICATION CAPABILITY THROUGH LATENT HEAT EXCHANGE. THE COMMONS IS BEING PROVIDED WITH CEILING FANS (INTERFACED TO BMS) TO HELP DESTRATIFY AIR AND ENHANCE COMFORT IN HIGH CONGREGATION AREAS.

BUILDING SUPPORT ROOMS SUCH AS THE MDF, MAIN AND EMERGENCY ELECTRICAL ROOMS WILL HAVE THERMOSTATIC CONTROL BY EITHER THERMOSTATICALLY CONTROLLED EXHAUST FAN OR SPLIT SYSTEM AC TO MAINTAIN A 85F SETPOINT.

DOMESTIC HOT WATER WILL BE RECIRCULATED AT 120F AND 140F (KITCHEN) THROUGH DISTRIBUTED DOMESTIC WATER HEATERS WITH CIRCULATION PUMPS.

EXPANSION TANKS AND AIR SEPARATORS WILL BE PROVIDED TO PROTECT THE SYSTEM FROM TEMPERATURE FLUCTUATIONS AND AIR ENTRAPMENT.

BID/PERMIT SET

CONDITIONAL USE NUMBER: CU2018-0016
DESIGN REVIEW NUMBER: DR2018-0114
SITE DEVELOPMENT PERMIT NUMBER: TBD
BUILDING PERMIT NUMBER: TBD

REGISTERED PROFESSIONAL ENGINEER
84086PE
DIGITAL SIGNATURE
OREGON
MARCH 9, 2018
CHRISTOPHER NARRAMORE

EXPIRES: 12/31/2020

Digitally signed by Chris Narramore
Date: 2019.03.14 08:47:24-07'00'

MECHANICAL SYMBOLS AND ABBREVIATIONS

BEAVERTON SCHOOL DISTRICT

MP0.0
74-18109-00
03/14/2019
REVISIONS

DLR Group
Architecture Engineering Planning Interiors

© 2019, DLR Group Architecture & Engineering Inc., an Oregon corporation, ALL RIGHTS RESERVED

C:\Revit\74-18109-00_ACMA_MEP_2018_Central_smargolis.rvt
3/13/2019 10:09:48 PM

ABBREVIATIONS

#	NUMBER
&	AND
@	AT
°C	DEGREES CELCIUS
°F	DEGREES FAHRENHEIT
A	COMPRESSED AIR
A AMP	AMPERE
A/C	AIR CONDITIONING(ER)
AABC	ASSOCIATED AIR BALANCE COUNCIL
AAP	AREA ALARM PANEL
AAV	AUTOMATIC AIR VENT
ACC	AIR COOLED CONDENSER
ACCU	AIR COOLED CONDENSING UNIT
ACD	AUXILIARY CONDENSATE DRAIN
AD	ACCESS DOOR
AD	AREA DRAIN
ADA	AMERICANS WITH DISABILITY ACT
ADDN	ADDITION OR ADDITIONAL
ADJ	ADJUSTABLE
AFF	ABOVE FINISH FLOOR
AFG	ABOVE FINISHED GRADE
AGF	AIR GAP FITTING
AHJ	AUTHORITY HAVING JURISDICTION
AHRI	AIR-CONDITIONING HEATING AND REFRIGERATION INSITUTE
AHU	AIR HANDLING UNIT
AI	AREA INLET
ALT	ALTERNATE
AMB	AMBIENT
AMBA	AMERICAN BOILER MANUFACTURERS ASSOCIATION
ANCH	ANCHOR
ANSI	AMERICAN NATIONAL STANDARDS INSTITUTE
AP	ACCESS PANEL
APPROX	APPROXIMATE
APD	AIR PRESSURE DROP
AR	ACID RESISTING
ARCH	ARCHITECTURAL
AS	AIR SEPERATOR
ASCE	AMERICAN SOCIETY OF CIVIL ENGINEERS
ASHP	AIR SOURCE HEAT PUMP
ASHRAE	AMERICAN SOCIETY OF HEATING REFRIGERATION AND AIR CONDITIONING ENGINEERS
ASME	AMERICAN SOCIETY OF MECHANICAL ENGINEERS
AUTO	AUTOMATIC
AV	AUDIO-VIDEO
AV	ACID VENT
AV	AIR VENT
AVTR	ACID VENT THRU ROOF
AW	ACID WASTE
AWG	AMERICAN WIRE GUAGE
AWT	AVERAGE WATER TEMPERATURE
B	BOILER
BAS	BUILDING AUTOMATION SYSTEM
BBO	BOILER BLOW OFF
BC	BALANCING COCK
BDD	BACK DRAFT DAMPER
BEL	BELOW
BF	BOILER FEED
BFF	BELOW FINISH FLOOR
BFP	BACKFLOW PREVENTER
BFV	BUTTERFLY VALVE
BHP	BREAK HOURSEPOWER
BLDG	BUILDING
BLKG	BLOCKING
BLKHD	BULKHEAD
BMS	BUILDING MANAGEMENT SYSTEM
BOC	BOTTOM OF CASING
BOD	BOTTOM OF DUCT
BOP	BOTTOM OF PIPE
BOT	BOTTOM
BSMT	BASEMENT
BTU	BRITISH THERMAL UNIT
BTUH	BRITISH THERMAL UNIT PER HOUR
BV	BALL VALVE
C	CONDUIT
C	CONDENSER WATER
CA	COMBUSTION AIR
CAP	CAPACITY
CD	CONDENSATE DRAIN
CENT	CENTRIFUGAL
CF	CUBIC FEET
CFH	CUBIC FEET PER HOUR
CFM	CUBIC FEET PER MINUTE
CH	CHILLER
CI	CAST IRON
CI	CURB INLET
CIP	CAST IRON PIPE
CIRC	CIRCULATING
CKT	CIRCUIT
CL	CENTER LINE
CLG	CEILING
CLR	CLEAR
CO	CLEAN OUT
CO	CARBON MONOXIDE
CO2	CARBON DIOXIDE
COMB	COMBINATION
COMM	COMMUNICATIONS
COMP	COMPRESSOR UNIT
CONC	CONCRETE
CONN(S)	CONNECTION(S)
CONST	CONSTRUCTION
CONT	CONTINUOUS
CONTR	CONTRACT(OR)
CONV	CONVECTOR
CP	CONDENSATE PUMP
CPS	CYCLES PER SECOND
CR	CONDENSER WATER RETURN
CR	CORRISION RESISTANT
CRAC	COMPUTER ROOM AIR CONDITIONING UNIT
CS	COUNTERSINK
CS	COMBINATION SEWER
CS	CONDENSER WATER SUPPLY
CSP	COOLING TOWER
CTR	CENTER
CU	CONDENSING UNIT
CUH	CABINET UNIT HEATER
CW	COLD WATER
CWR	CHILLED WATER RETURN
CWS	CHILLED WATER SUPPLY
CYL	CYLINDER
D	DRAIN
D	DIFFUSER
D	DEPTH
DB	DECIBEL
DB	DRY BULB
DBL	DOUBLE
DC	DIRECT CURRENT
DC	DUST COLLECTOR
DDC	DIRECT DIGITAL CONTROL
DDCVA	DOUBLE DETECTOR CHECK VALVE ASSEMBLY
DE	DEIONIZED WATER
DEG	DEGREE
DEMO	DEMOLISH OR DEMOLITION
DEPT	DEPARTMENT
DET	DETAIL
DF	DRINKING FOUNTAIN
DFR	DIESEL FUEL RETURN
DFS	DIESEL FUEL SUPPLY
DFV	DIESEL FUEL VENT
DG	DOOR GRILLE
DH	DUCT HEATER
DI	DISTILLED WATER
DIA	DIAMETER
DIAG	DIAGONAL
DIM	DIMENSION
DISCH	DISCHARGE
DISTR	DISTRIBUTION
DIV	SPECIFICATION DIVISION
DMPR	DAMPER
DN	DOWN
DOAS	DEDICATED OUTDOOR AIR SYSTEM
DSD	DIFFERENTIAL SMOKE DETECTOR
DSN	DOWNSPOUT NOZZLE
DSP	DRY STANDPIPE
DTL	DETAIL
DTR	DUCT THRU ROOF
DW	DISHWASHER
DWG(S)	DRAWING(S)

(E)	EXISTING
E	EAST
EA	EACH
EA	EXHAUST AIR
EAT	ENTERING AIR TEMPERATURE
EC	ELECTRICAL CONTRACTOR
EDH	ELECTRIC DUCT HEATER
EER	ENERGY EFFICIENCY RATIO
EEW	EMERGENCY EYE WASH
EEWS	EMERGENCY EYE WASH SHOWER
EF	EXHAUST FAN
EFF	EFFICIENCY
EH	ELECTRICAL HEATER
EL	ELEVATION
ELEC	ELECTRIC(AL)
ELEV	ELEVATOR
EMER	EMERGENCY
EMCS	ENERGY MANAGEMENT CONTROL SYSTEM
ENCL	ENCLOSURE
ENG	ENGINEER
EQ	EQUAL
EQUIP	EQUIPMENT
EQUIV	EQUIVALENT
ES	EMERGENCY SHOWER
ESP	EXTERNAL STATIC PRESSURE
EST	ESTIMATE
ET	EXPANSION TANK
EWC	ELECTRIC WATER COOLER
EWH	ELECTRIC WATER HEATER
EWT	ENTERING WATER TEMPERATURE
EXH	EXHAUST
EXIST	EXISTING
EXP	EXPOSED
EXT	EXTERIOR
F	FAHRENHEIT
F	FIRELINE
F	FURNACE
F.V.	FIELD VERIFY
FA	FIRE ALARM
FA	FACE
FAA	FIRE ALARM ANNUNCIATOR
FAB	FABRICATE(D)
FACP	FIRE ALARM CONTROL PANEL
FCO	FLOOR CLEAN OUT
FCU	FAN COIL UNIT
FD	FIRE DAMPER
FD	FLOOR DRAIN
FDC	FIRE DEPARTMENT CONNECTION
FE	FIRE EXTINGUISHER
FEC	FIRE EXTINGUISHER CABINET
FF	FINISH FLOOR
FH	FIRE HYDRANT
FHC	FIRE HOSE CABINET
FIN	FINISHED
FIX	FIXTURE
FLEX	FLEXIBLE
FLR	FLOOR
FM	FIRE MAIN
FM	FORCE MAIN
FME	FLOW MEAUSURING EQUIPMENT
FO	FLAT OVAL (DUCTWORK)
FOF	FUEL OIL FILL
FOR	FUEL OIL RETURN
FOS	FUEL OIL SUPPLY
FOV	FUEL OIL VENT
FPD	FIRE PUMP DISCHARGE
FPM	FEET PER MINUTE
FS	FLOOR SINK
FS	FLOW SWITCH
FSD	FIRE/SMOKE DAMPER
FT	FEET (FOOT)
FT	FLOW TRANSMITTER
FTR	FIN TUBE RADIATOR
FTU	FAN TERMINAL UNIT
FUT	FUTURE
FVC	FIRE VALVE CABINET
G	GRILLE
G	NATURAL GAS
GA	GAUGE
GAL	GALLON
GALV	GALVANIZED
GC	GENERAL CONTRACTOR
GCO	GRADE CLEAN OUT
GD	GARBAGE DISPOSAL
GEN	GENERAL
GFCI	GROUND FAULT CIRCUIT INTERRUPTER
GHR	GLYCOL-WATER HEATING RETURN
GHS	GLYCOL-WATER HEATING SUPPLY
GOVT	GOVERNMENT
GPD	GOLLONS PER DAY
GPH	GALLONS PER HOUR
GPM	GALLONS PER MINUTE
GR	GRILLE
GSHP	GROUND SOURCE HEAT PUMP
GV	GATE VALVE
GVTR	GREASE VENT THROUGH ROOF
GW	GREASE WASTE
H	HEIGHT
HB	HOSE BIB
HC	HEATING COIL
HCR	HOT / CHILLED WATER RETURN
HCS	HOT / CHILLED WATER SUPPLY
HGR	HANGER
HID	HIGH INTENSITY DISCHARGE
HORIZ	HORIZONTAL
HP	HEAT PUMP
HP	HORSEPOWER
HP	HIGH PRESSURE
HPR	HIGH PRESSURE STEAM RETURN
HPS	HIGH PRESSURE STEAM SUPPLY
HR	HOUR
HS	HAND SINK
HTG	HEATING
HTR	HEATER
HTWR	HIGH TEMPERATURE HOT WATER RETURN
HTWS	HIGH TEMPERATURE HOT WATER SUPPLY
HUM	HUMIDIFIER
HVAC	HEATING VENTILATING AND AIR CONDITIONING
HW	DOMESTIC HOT WATER
HWC	DOMESTIC HOT WATER RECIRCULATING
HWR	HOT WATER RETURN
HWS	HOT WATER SUPPLY
HX	HEAT EXCHANGER
HZ	HERTZ (FREQUENCY)
i.e.	THAT IS
IAQ	INDOOR AIR QUALITY
IAW	IN ACCORDANCE WITH
IBC	INTERNATIONAL BUILDING CODE
ID	INSIDE DIAMETER
IE	INVERT ELEVATION
IES	ILLUMINATING ENGINEERING SOCIETY
IH	INTAKE HOOD
IJS	IN JOIST SPACE
IN	INCH
INSUL	INSULATION
INT	INTERIOR
IP	IRON PIPE
IW	INDIRECT WASTE
JAN	JANITOR
JB	JUNCTION BOX
JS	JANITORS SINK
KW	KILOWATT
KWH	KILOWATT HOUR
L	LAVATORY
LAT	LEAVING AIR TEMPERATURE
LAV	LAVATORY
LB(S)	POUND(S)
LF	LINEAR FOOT
LG	LENGTH (LONG)
LIN	LINEAR
LOX	LIQUID OXYGEN
LPG	LIQUID PETROLIUM GAS
LPR	LOW PRESSURE STEAM RETURN
LPS	LOW PRESSURE STEAM SUPPLY
LS	LAWN SPRINKLER
LTD	LINED TRANSFER DUCT
LV	LOUVER
LWT	LEAVING WATER TEMPERATURE

M	THOUSAND
MA	MIXED AIR
MAINT	MAINTENANCE
MAN	MANUAL
MATL	MATERIAL
MAU	MAKEUP AIR UNIT
MAV	MANUAL AIR VENT
MAX	MAXIMUM
MBH	THOUSAND BTU PER HOUR
MC	MECHANICAL CONTRACTOR
MD	MOTORIZED DAMPER
MECH	MECHANICAL
MEZZ	MEZZANINE
MFR	MANUFACTURER
MFRG	MANUFACTURING
MH	MANHOLE
MIN	MINIMUM
MISC	MISCELLANEOUS
ML	MOTORIZED LOUVER
MPG	MEDIUM PRESSURE GAS
MS	MOP SINK
MTD	MOUNTED
MTG	MOUNTING
MTWR	MEDIUM TEMPERATURE HOT WATER RETURN
MTWS	MEDIUM TEMPERATURE HOT WATER SUPPLY
MV	MEDICAL VACUUM
(N)	NEW
N	NITROGEN
N	NORTH
N2O	NITROUS OXIDE
N.C.	NORMALLY CLOSED
N.O.	NORMALLY OPEN
N/A	NOT APPLICABLE
NC	NOISE CRITERIA
NC	NORMALLY CLOSED
NEC	NATIONAL ELECTRIC CODE
NEMA	NATIONAL ELECTRICAL MANUFACTURERS ASSN.
NIC	NOT IN CONTRACT
NO	NUMBER
NO2	NITROGEN DIOXIDE
NOM	NOMINAL
NTS	NOT TO SCALE
NPCW	NON POTABLE COLD WATER
NPHW	NON POTABLE HOT WATER
NPHWC	NON POTABLE HOT WATER CIRC
NTS	NOT TO SCALE
O&M	OPERATION AND MAINTENANCE
OA	OUTSIDE AIR
OC	ON CENTER
OD	OUTSIDE DIAMETER
OD	OVERFLOW DRAIN
OFOI	OWNER FURNISHED OWNER INSTALLED
OPP	OPPOSITE
ORD	OVERFLOW ROOF DRAIN
OSA	OUTSIDE AIR
OSD	OVERFLOW STORM DRAIN
OSAY	OUTSIDE SCREW AND YOKE
OTCS	OPEN TO CEILING SPACE
OVFL	OVERFLOW
OVHD	OVERHEAD
OX	OXYGEN
(P)	PRIMED
P/T	PRESSURE/TEMPERATURE TEST PORT
P	PUMP
PAR	PARALLEL
PB	PULL BOX
PB	PUSH BUTTON
PC	PUMPED CONDENSATE
PCF	POUNDS PER CUBIC FOOT
PD	PRESSURE DIFFERENCE
PD	PUMP DISCHARGE
PDI	PLUMBING & DRAINAGE INSTITUTE
PE	POLYETHYLENE
PENT	PENTHOUSE
PERF	PERFORATED
PERP	PERPENDICULAR
PG	PRESSURE GAUGE
PI	POINT OF INTERSECTION
PI	PRESSURE INDICATOR
PIV	POST INDICATOR VALVE
PL	PLATE
PLBG	PLUMBING
PLYWD	PLYWOOD
PNEU	PNEUMATIC
PNL	PANEL
POC	POINT OF CONNECTION
PR	PAIR
PSI	POUNDS PER SQUARE INCH
PSID	POUNDS PER SQUARE INCH PRESSURE DROP
PT	PLASTER TRAP
PVC	POLYVINYL CHLORIDE
PW	PUMPED WASTE
PWR	POWER
QTY	QUANTITY
R	RISER
RA	RETURN AIR
RAD	RADIUS
RAD	RADIATOR
RCP	REFLECTED CEILING PLAN
RCP	REINFORCED CONCRETE PIPE
RCU	RECIPROCATING CHILLER UNIT
RD	ROOF DRAIN
RD	REFRIGERANT DISCHARGE
REF	REFERENCE
REFR	REFRIGERANT
REG	REGISTER
REM	REMOVABLE
REQ(D)	REQUIRE(D)
REV	REVISION(S)
RF	RETURN FAN
RH	RELATIVE HUMIDITY
RH	RELIEF HOOD
RHC	REHEAT COIL
RHG	REFRIGERANT GOT GAS
RIJS	RISE IN JOIST SPACE
RL	RAIN LEADER (OR STORM WATER)
RL	REFRIGERANT LIQUID
RM	ROOM
RND	ROUND
RPBP	REDUCED PRESSURE BACKFLOW PREVENTER
RPM	REVOLUTIONS PER MINUTE
RS	REFRIGERANT SUCTION
RTU	ROOF TOP UNIT
RWS	RAIN WATER SYSTEM
S	SMOKE DAMPER
S	SOUTH
S	SANITARY SEWER
S	SPRINKLER LINE
SA	SOUND ATTENUATOR
SA	SUPPLY AIR
SAN	SANITARY WASTE
SC	SCIENCE CENTER
SC	SECURITY
SCHED	SCHEDULE
SCO	SURFACE CLEAN OUT
SCW	SOFT COLD WATER
SD	SMOKE DAMPER
SD	STORM DRAIN
SD	SMOKE DETECTOR
SE	STEAM EXHAUST VENT
SECT	SECTION
SF	SQUARE FOOT
SF	SUPPLY FAN
SGL	SINGLE
SH	SHOWER
SHT	SHEET
SHW	SOFT HOT WATER
SIM	SIMILAR
SK	SINK
SM	SPRINKLER MAIN
SM	SHEET METAL
S.O.V.	SHUT OFF VALVE
SP	STATIC PRESSURE
SP	STAND PIPE
SPD	SURGE PROTECTION DEVICE
SPEC	SPECIFICATION(S)
SPK	SPRINKLER
SPPA	STRUCTURAL POLYCARBONATE PANEL ASSEMBLY
SQ	SQUARE
SS	STAINLESS STEEL

SS	SERVICE SINK
SST	SECONDARY STORM DRAINAGE
ST	STORM DRAINAGE
STD	STANDARD
STL	STEEL
STOR	STORAGE
STRUCT	STRUCTURAL
SUSP	SUSPENDED
SV	SOLENOID VALVE
SWBD	SWITCHBOARD
SWP	STEAM WORKING PRESSURE
SYM	SYMETRICAL
T	TEMPERED
T	THERMOSTAT
T&B	TOP AND BOTTOM
TA	TRANSFER AIR
TB	TERMINAL BOX
TC	TEMPERATURE CONTROL
TC	TECHNOLOGY CENTER
TD	TRANSFER DUCT
TD	TRENCH DRAIN
TEMP	TEMPORARY
TEMP	TEMPERATURE
THK	THICK(NESS)
TMV	THERMOSTATIC MIXING VALVE
TOIL	TOILET
TPV	TRAP PRIMER VALVE
TS	TEMPERATURE SENSOR
TSP	TOTAL STATIC PRESSURE
TT	TEMPERATURE TRANSMITTER
TYP	TYPICAL
UC	UNIT COOLER
UG	UNDERGROUND
UH	UNIT HEATER
UL	UNDERWRITERS LABORATORIES
UNEX	UNEXCAVATED
UNFIN	UNFINISHED
UNO	UNLESS NOTED OTHERWISE
UR	URINAL
UTIL	UTILITY
UV	UNIT VENTILATOR
V	VENT
V	VOLT
V	VACUUM
VA	VOLT-AMPERE
VA	VALVE
VAC	VACUUM
VAV	VARIABLE AIR VOLUME
VBF	VENT BELOW FLOOR
VCP	VITRIFIED CLAY PIPE
VD	VOLUME DAMPER - MANUAL
VEL	VELOCITY
VENT	VENTALATOR(TION)
VERT	VERTICAL
VEST	VESTIBULE
VFD	VARIABLE FREQUENCY DRIVE
VOL	VOLUME
VP	VACUUM PUMP
VSMP	VARIABLE SPEED MOTOR CONTROLLER
VTR	VENT THROUGH ROOF
W	WIRE
W	WEST
W	WATER SERVICE
W	WIDE
W	WASTE
W	WATT
W/	WITH
W/O	WITHOUT
WABG	SANITARY WASTE ABOVE GRADE
WB	WET BULB
WBEG	SANITARY WASTE BELOW GRADE
WC	WATER COLUMN
WC	WATER CLOSET
WCC	WATER COOLED CONDENSER
WCL	WATER CLOSET/LAVATORY COMBINATION
WCO	WALL CLEAN OUT
WF	WASH FOUNTAIN
WFMD	WATER FLOW MEASURING DEVICE
WG	WIRE GUARD
WH	WALL HYDRANT
WH	WATER HEATER
WHA	WATER HAMMER ARRESTOR
WLR	WATER LOOP RETURN
WLS	WATER LOOP SUPPLY
WP	WEATHER-PROOF (NEMA 3R)
WP	WEATHERPROOF
WPB	WHIRLPOOL BATH
WSP	WET STAND PIPE
WSEC	WASHINGTON STATE ENERGY CODE
WT	WEIGHT
YH	YARD HYDRANT
ZCB	ZONE CONTROL BOX
ZCV	ZONE CONTROL VALVE

C:\Revit\74-18109-00_ACMA_MEP_2018_Central_smargolis.rvt
3/13/2019 10:09:51 PM

BID/PERMIT SET

CONDITIONAL USE NUMBER: CU2018-0016
DESIGN REVIEW NUMBER: DR2018-0114
SITE DEVELOPMENT PERMIT NUMBER: TBD
BUILDING PERMIT NUMBER: TBD

REGISTERED PROFESSIONAL ENGINEER
84086PE
DIGITAL SIGNATURE
OREGON
MARCH 9, 2010
CHRISTOPHER NARRAMORE
EXPIRES: 12/31/2020

Digitally signed by Chris Narramore
Date: 2019.03.14 08:47:42-07'00'

MECHANICAL SYMBOLS AND ABBREVIATIONS
ACMA
BEAVERTON SCHOOL DISTRICT

MP0.1
74-18109-00
03/14/2019
REVISIONS

DLR Group
Architecture Engineering Planning Interiors

©2019, DLR Group Architecture & Engineering Inc., an Oregon corporation, ALL RIGHTS RESERVED

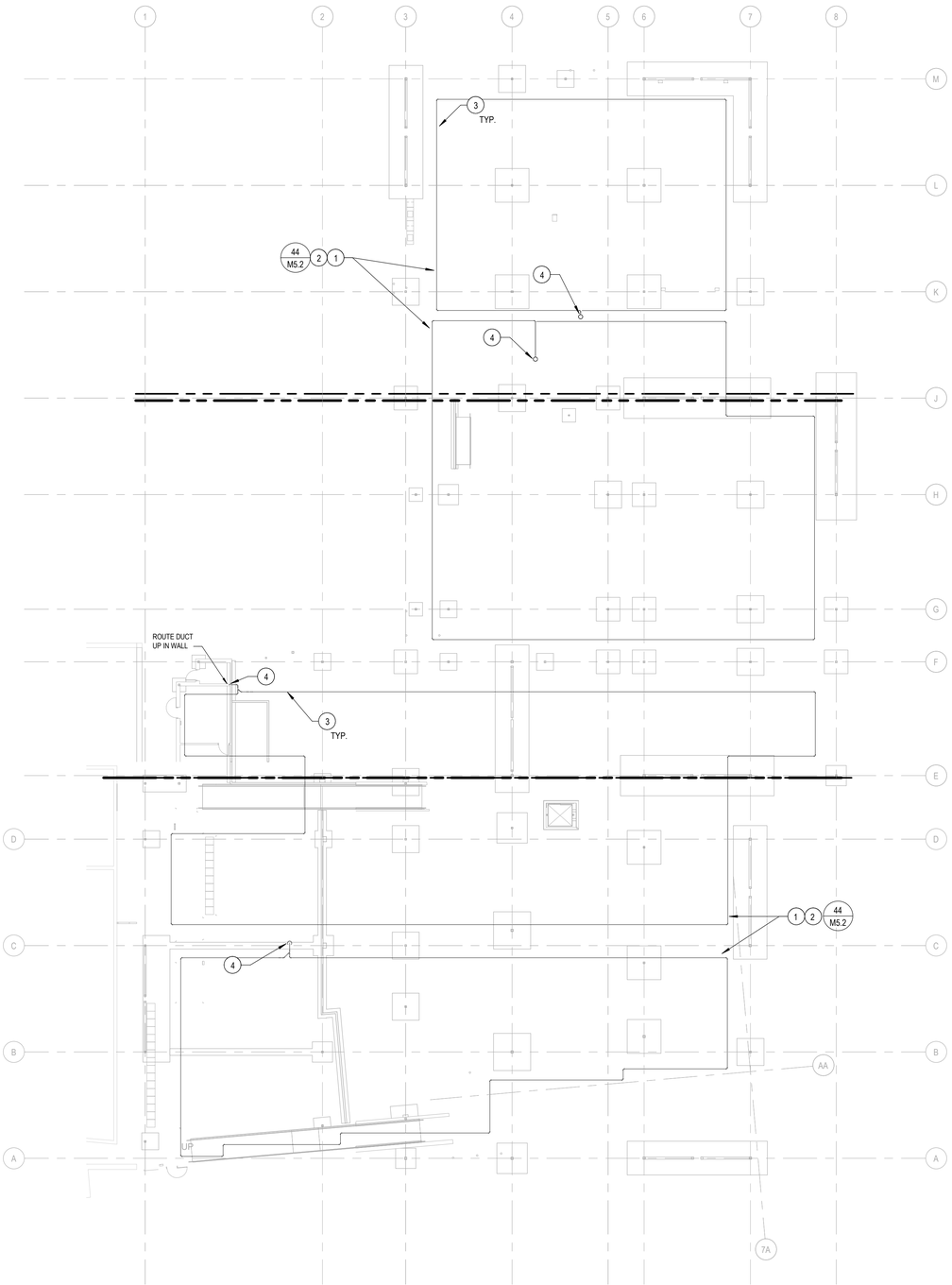

MECHANICAL UNDERGROUND PIPING PLAN

SCALE: 1" = 20'-0"

NORTH

RADON NOTES

A. NOTES BELOW ARE IN ADDITION TO THOSE APPLICABLE ON SHEET MP0.1
B. GAS CONVEYANCE PIPING SHALL NOT BE TRAPPED AND SHALL HAVE A MIN. SLOPE OF ONE-PERCENT (1%).
C. PER OSSC 2014, ONE LENGTH OF PERFORATED PIPE SHALL BE PROVIDED FOR EACH 50 LINEAL FEET OR PORTION THEREOF OF THE AREA TO BE SERVED MEASURED IN ANY RIGHT ANGLE TO THE PERIMETER. PIPE LENGTHS SHALL TERMINATE NO FURTHER THAN 5 FEET FROM AN EXTERIOR WALL FOOTING OR INTERIOR WALL CUT-OFF FOOTING
D. IN UTILIZING THE EXCEPTION TO 1811.3.2, BY LOCATING ONE SUBSLAB SOIL EXHAUST SYSTEM DUCT (SSESD) FOR EVERY 15,000 SF, ALL PIPING AT INTERSECTIONS AND AT THE TRANSITION TO THE SSESD SHALL BE POSITIEVELY CONNECTED SUCH THAT NO AIR LEAKAGE OCCURS AT THE PIPE JOINTS.
E. COORDINATE ALL WORK WITH OTHER TRADES INVOLVED. OFFSETS IN PIPING AND TRANSITIONS AROUND OBSTRUCTIONS (UNDERGROUND PIPING, FOOTING, ELECTRICAL, ETC) SHALL BE PROVIDED AT NO COST TO THE OWNER.
F. BELOW GRADE PIPE SHALL BE SOLVENT-WELDED, GASKETED OR MECHANICALLY JOINED PER OSSC 1811.3.3.2
G. SPECIAL INSPECTION REQUIRED FOR RADON MITIGATION SYSTEM PER OSSC SECTION 1705.8
H. REFER TO ARCHITECTURAL AND STRUCTURAL DETAILS AND SPECIFICATIONS FOR DETAILS RELATED TO SUBFLOOR PREPARATION, MEMBRANES, SEALS AND CONCRETE TREATMENT.

KEY NOTES

1. ONE SUBSLAB SOIL EXHAUST DUCT (SSED) USING ACTIVE SOIL DEPRESSURIZATION (ASD) SYSTEM: USE GAS CONVEYANCE PIPING SYSTEM COMPLYING WITH 2014 OSSC 1811.3. SHALL BE INSTALLED FOR EVERY 15,000 SF OR PORTION THEROF OF BUILDING SUBSLAB.
2. THE PIPE SHALL BE EMBEDDED IN THE MIDDLE OF A MINIMUM 12" WIDE X 8" DEEP GRAVEL TRENCH WITH THE PERFORATION HOLES ORIENTED TO ALLOW FOR BOTH THE FREE CONVEYANCE OF GAS INTO THE PIPE AND THE DRAINAGE OF ANY CONDENSATION WHICH MAY COLLECT. THE PIPING SHALL BE A STANDARD 3" DIAMETER PERFORATED PVC, EPDM OR NEOPRENE PIPE. REFER TO DETAIL 44/M5.2 FOR ADDITIONAL INFORMATION.
3. ROUTE PIPING SYSTEM WITHIN 5' FROM EXTERIOR WALL FOOTING OR INTERIOR WALL CUT-OFF FOOTING.
4. SSED'S SHALL BE EMBEDDED VERTICALLY INTO THE SUB-SLAB AGGREGATE OR OTHER PERMEABLE MATERIAL BEFORE THE SLAB IS CAST. A "T" FITTING OR EQUIVALENT METHOD SHALL BE USED TO ENSURE THAT THE SSESD OPENING REMAINS.

KEY PLAN

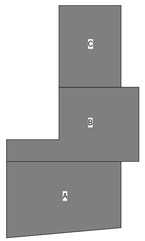

NORTH

BID/PERMIT SET

CONDITIONAL USE NUMBER: CU2018-0016
DESIGN REVIEW NUMBER: DR2018-0114
SITE DEVELOPMENT PERMIT NUMBER: TBD
BUILDING PERMIT NUMBER: TBD

REGISTERED PROFESSIONAL ENGINEER
84086PE
DIGITAL SIGNATURE
OREGON
MARCH 9, 2018
CHRISTOPHER NARRAMORE

EXPIRES: 12/31/2020

Digitally signed by Chris Narramore
Date: 2019.03.14 08:48:30-07'00'

MECHANICAL UNDERGROUND PIPING
ACMA
BEAVERTON SCHOOL DISTRICT

M1.0
74-18109-00
03/14/2019
REVISIONS

DLR Group
Architecture Engineering Planning Interiors

©2019, DLR Group Architecture & Engineering Inc., an Oregon corporation, ALL RIGHTS RESERVED

C:\Revit\74-18109-00_ACMA_MEP_2018_Central_sreigh.rvt
3/14/2019 8:43:07 AM

HVAC PLAN, LEVEL 1 - AREA A

SCALE: 1/8" = 1'-0"

NORTH

KEYED NOTES

1 LINE DUCT WITH 1" ACOUSTICAL LINER BETWEEN POINTS INDICATED.

2 HVAC EMERGENCY SHUTOFF SWITCH. PROVIDE WITH COVER. PROVIDE WITH RING AROUND BUTTON TO DETER FALSE ALARMS.

KEY PLAN

BID/PERMIT SET

CONDITIONAL USE NUMBER: CU2018-0016
DESIGN REVIEW NUMBER: DR2018-0114
SITE DEVELOPMENT PERMIT NUMBER: TBD
BUILDING PERMIT NUMBER: TBD

REGISTERED PROFESSIONAL ENGINEER
84086PE
DIGITAL SIGNATURE
OREGON
MARCH 9, 2010
CHRISTOPHER NARRAMORE

EXPIRES: 12/31/2020

Digitally signed by Chris Narramore
Date: 2019.03.14 08:48:39 -07'00'

HVAC PLAN, LEVEL 1 - AREA A
ACMA
BEAVERTON SCHOOL DISTRICT

M1.1A
74-18109-00
03/14/2019
REVISIONS

DLR Group
Architecture Engineering Planning Interiors

© 2019 DLR Group Architecture & Engineering Inc., an Oregon corporation, ALL RIGHTS RESERVED

C:\Revit\74-18109-00_ACMA_MEP_2018_Central_smargolis.rvt
3/13/2019 10:07:31 PM

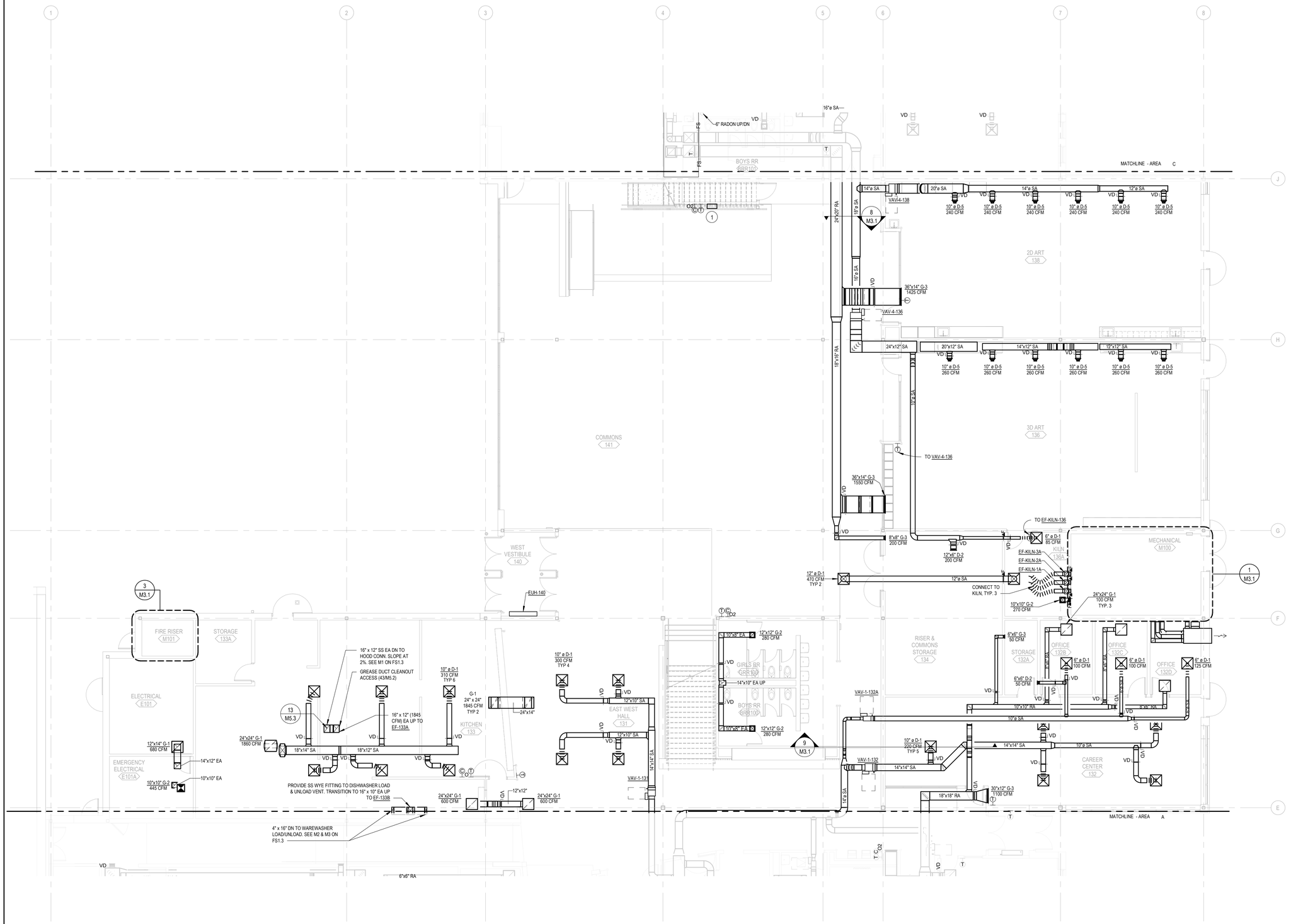

HVAC PLAN, LEVEL 1 - AREA B

SCALE: 1/8" = 1'-0"

NORTH

KEYED NOTES

1 CEILING FAN CONTROL BOX. PROVIDE FACTORY CONTROLLER. PROVIDE FIRE ALARM CONNECTION. PROVIDE LOCKED KEY COVER OVER CONTROLLER

KEY PLAN

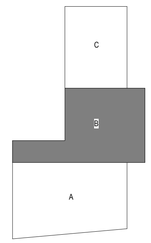

BID/PERMIT SET

CONDITIONAL USE NUMBER: CU2018-0016
DESIGN REVIEW NUMBER: DR2018-0114
SITE DEVELOPMENT PERMIT NUMBER: TBD
BUILDING PERMIT NUMBER: TBD

REGISTERED PROFESSIONAL ENGINEER
84086PE
DIGITAL SIGNATURE
OREGON
MARCH 9, 2018
CHRISTOPHER NARRAMORE

EXPIRES: 12/31/2020

Digitally signed by Chris Narramore
Date: 2019.03.14 08:48:49-07'00'

HVAC PLAN, LEVEL 1 - AREA B
ACMA
BEAVERTON SCHOOL DISTRICT

M1.1B
74-18109-00
03/14/2019
REVISIONS

DLR Group
Architecture Engineering Planning Interiors

©2019, DLR Group Architecture & Engineering Inc., an Oregon corporation, ALL RIGHTS RESERVED

C:\Revit\74-18109-00_ACMA_MEP_2018_Central_smargolis.rvt
3/13/2019 10:07:37 PM

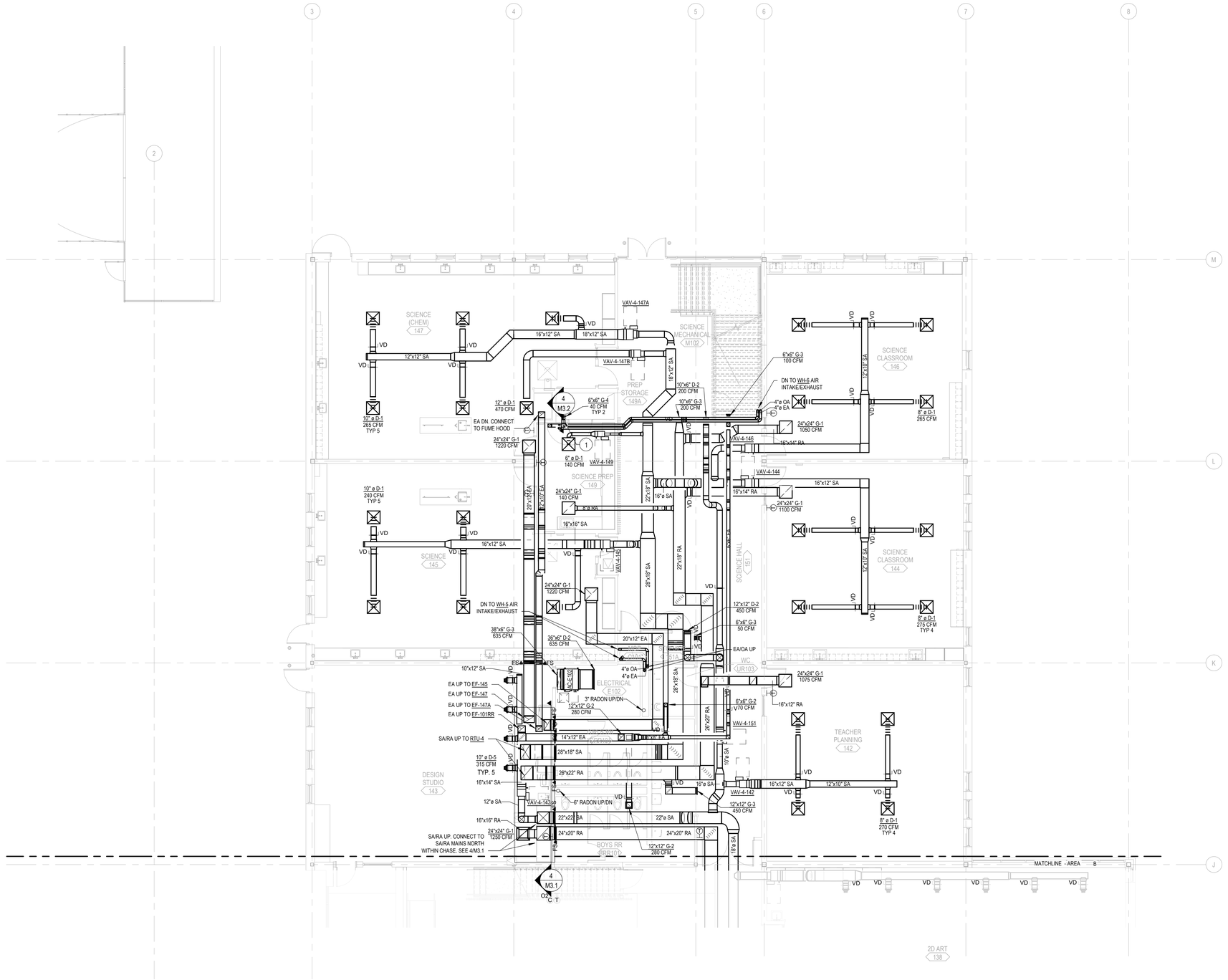

HVAC PLAN, LEVEL 1 - AREA C

NORTH

SCALE: 1/8" = 1'-0"

KEYED NOTES

1 6X6 EA, HAZARDOUS EXHAUST, CONFORM WITH OMSC SECTION 510. DUCT SHALL BE CONTAINED IN A 1-HR RATED SHAFT FROM EXIT OF WALL THRU ROOF PENETRATION. DUCT SHALL BE CONSTRUCTED OF 24GA SHEET METAL.

KEY PLAN

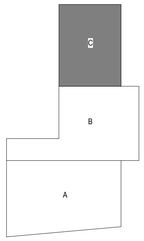

BID/PERMIT SET

CONDITIONAL USE NUMBER: CU2018-0016
DESIGN REVIEW NUMBER: DR2018-0114
SITE DEVELOPMENT PERMIT NUMBER: TBD
BUILDING PERMIT NUMBER: TBD

REGISTERED PROFESSIONAL ENGINEER
84086PE
DIGITAL SIGNATURE
OREGON
MARCH 9, 2010
CHRISTOPHER NARRAMORE

EXPIRES: 12/31/2020

Digitally signed by Chris Narramore
Date: 2019.03.14 08:48:58-07'00'

HVAC PLAN, LEVEL 1 - AREA C
ACMA
BEAVERTON SCHOOL DISTRICT

M1.1C
74-18109-00
03/14/2019
REVISIONS

DLR Group
Architecture Engineering Planning Interiors

©2019, DLR Group Architecture & Engineering inc., an Oregon corporation, ALL RIGHTS RESERVED

C:\Revit\74-18109-00_ACMA_MEP_2018_Central_smatgolis.rvt
3/13/2019 10:07:43 PM

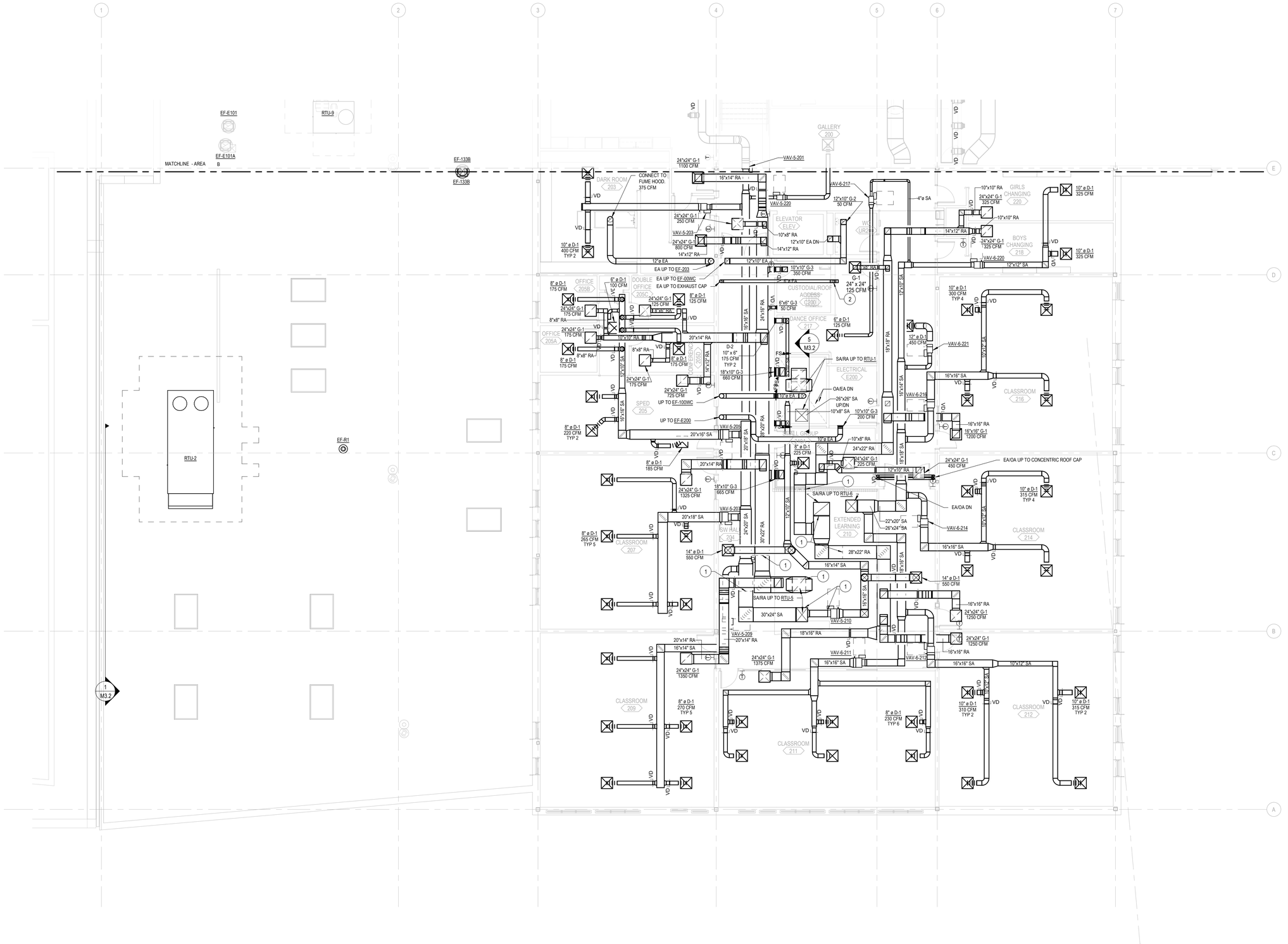

LEGEND NOTES

1 LINE DUCT WITH 1" ACOUSTICAL LINER BETWEEN POINTS INDICATED.

2 DRYER EXHAUST DUCT TO BE OF MIN. THICKNESS 0.016" AND PERMANENT LABEL OR TAG WITHIN 6'-0" OF DYER EXHAUST CONNECTION INDICATING EQUIVALENT LENGTH OF DUCTWORK TO THE TERMINATION POINT TO MEET 2014 OMSC 504.6. TERMINATE DUCT WORK DOWN CHASE WALL AND INTO DRYER BOX, IPS CORP MODEL DB-425 OR SIM.

KEY PLAN

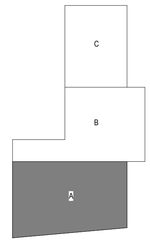

BID/PERMIT SET

CONDITIONAL USE NUMBER: CU2018-0016
DESIGN REVIEW NUMBER: DR2018-0114
SITE DEVELOPMENT PERMIT NUMBER: TBD
BUILDING PERMIT NUMBER: TBD

REGISTERED PROFESSIONAL ENGINEER
84086PE
DIGITAL SIGNATURE
OREGON
MARCH 9, 2018
CHRISTOPHER NARRAMORE
EXPIRES: 12/31/2020
Digitally signed by Chris Narramore
Date: 2019.03.14 08:49:09-07'00'

HVAC PLAN, LEVEL 2 - AREA A
ACMA
BEAVERTON SCHOOL DISTRICT

M1.2A
74-18109-00
03/14/2019
REVISIONS

DLR Group
Architecture Engineering Planning Interiors

©2019, DLR Group Architecture & Engineering Inc., an Oregon corporation, ALL RIGHTS RESERVED

NORTH

HVAC PLAN, LEVEL 2 - AREA A
SCALE: 1/8" = 1'-0"

C:\Revit\74-18109-00_ACMA_MEP_2018_Central_smargolis.rvt
3/13/2019 10:07:44 PM

LEGEND NOTES

1 30" Ø SA, 26" Ø SA AND 16" Ø SA DUCT TO BE COORDINATED THROUGH OPEN WEB JOISTS BETWEEN GRIDS E AND H. FIELD VERIFY EXACT LOCATION AND PASSABLE SPACE IN JOISTS.

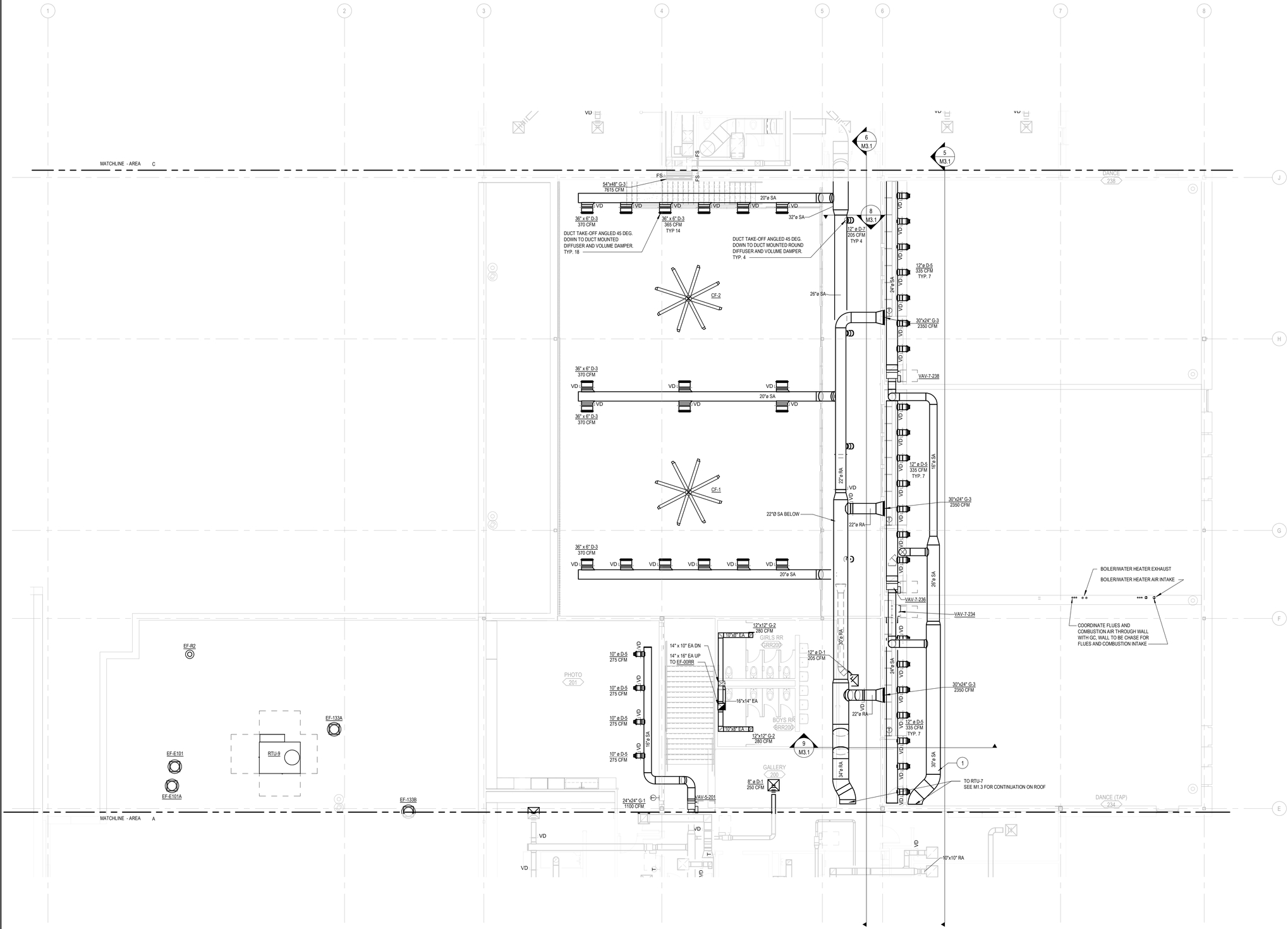

HVAC PLAN, LEVEL 2 - AREA B

SCALE: 1/8" = 1'-0"

NORTH

KEY PLAN

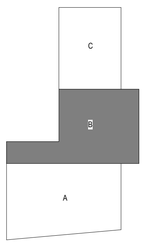

BID/PERMIT SET

CONDITIONAL USE NUMBER: CU2018-0016
DESIGN REVIEW NUMBER: DR2018-0114
SITE DEVELOPMENT PERMIT NUMBER: TBD
BUILDING PERMIT NUMBER: TBD

REGISTERED PROFESSIONAL ENGINEER
84086PE
DIGITAL SIGNATURE
OREGON
MARCH 9, 2010
CHRISTOPHER NARRAMORE
EXPIRES: 12/31/2020

Digitally signed by Chris Narramore
Date: 2019.03.14 08:49:33-07'00'

HVAC PLAN, LEVEL 2 - AREA B
ACMA
BEAVERTON SCHOOL DISTRICT

M1.2B
74-18109-00
03/14/2019
REVISIONS

DLR Group
Architecture Engineering Planning Interiors

©2019, DLR Group Architecture & Engineering Inc., an Oregon corporation, ALL RIGHTS RESERVED

C:\Revit\74-18109-00_ACMA_MEP_2018_Central_smargolis.rvt
3/13/2019 10:07:46 PM

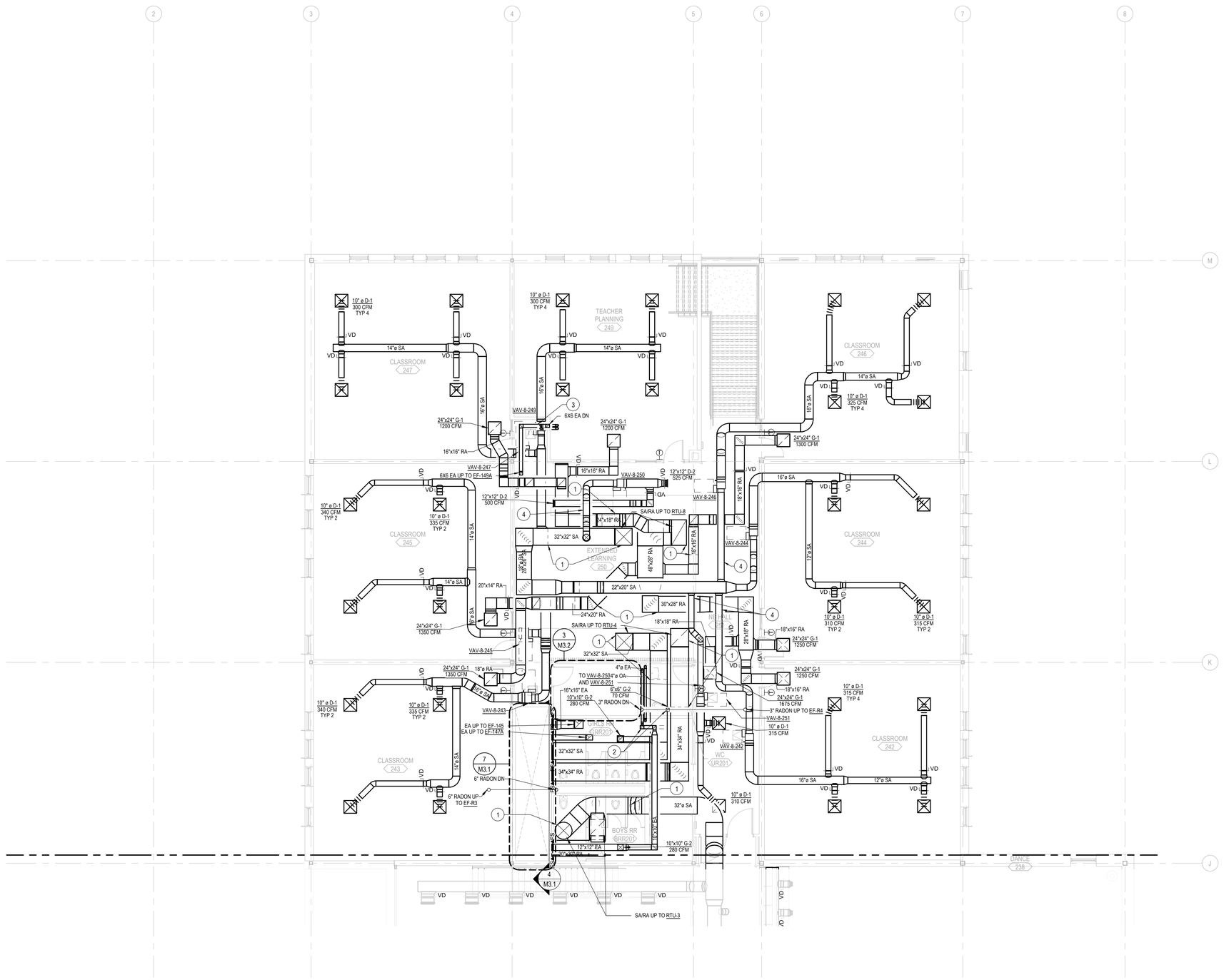

HVAC PLAN, LEVEL 2 - AREA C

NORTH

SCALE: 1/8" = 1'-0"

LEGEND NOTES

1. LINE DUCT WITH 1" ACOUSTICAL LINER BETWEEN POINTS INDICATED.
2. 6"x6" EA DN BELOW ADJACENT 32"x32" SA. CONNECT TO G-1, 12"x12", 70 CFM IN WC, UR201.
3. 6X6 EA, HAZARDOUS EXHAUST, CONFORM WITH OMSC SECTION 510. DUCT SHALL BE FIRE WRAPPED WITH 2-HR WRAPPING FROM EXIT OF WALL THRU ROOF PENETRATION. DUCT SHALL BE CONSTRUCTED OF 24GA SHEET METAL. ROUTE ABOVE VAVBOXES AND DO NOT OBSTRUCT THEIR ACCESS SPACE.
4. 10" Ø SA, AND 12" Ø SA DUCTS TO BE COORDINATED THROUGH OPEN WEB JOISTS. FIELD VERIFY EXACT LOCATION AND PASSABLE SPACE IN JOISTS.

BID/PERMIT SET

CONDITIONAL USE NUMBER: CU2018-0016
DESIGN REVIEW NUMBER: DR2018-0114
SITE DEVELOPMENT PERMIT NUMBER: TBD
BUILDING PERMIT NUMBER: TBD

REGISTERED PROFESSIONAL ENGINEER
84086PE
DIGITAL SIGNATURE
OREGON
MARCH 9, 2018
CHRISTOPHER NARRAMORE

EXPIRES: 12/31/2020

Digitally signed by Chris Narramore
Date: 2019.03.14 08:49:44 -07'00'

HVAC PLAN, LEVEL 2 - AREA C
ACMA
BEAVERTON SCHOOL DISTRICT

M1.2C
74-18109-00
03/14/2019
REVISIONS

KEY PLAN

DLR Group
Architecture Engineering Planning Interiors

©2019, DLR Group Architecture & Engineering Inc., an Oregon corporation, ALL RIGHTS RESERVED

C:\Revit\74-18109-00_ACMA_MEP_2018_Central_smargolis.rvt
3/13/2019 10:07:47 PM

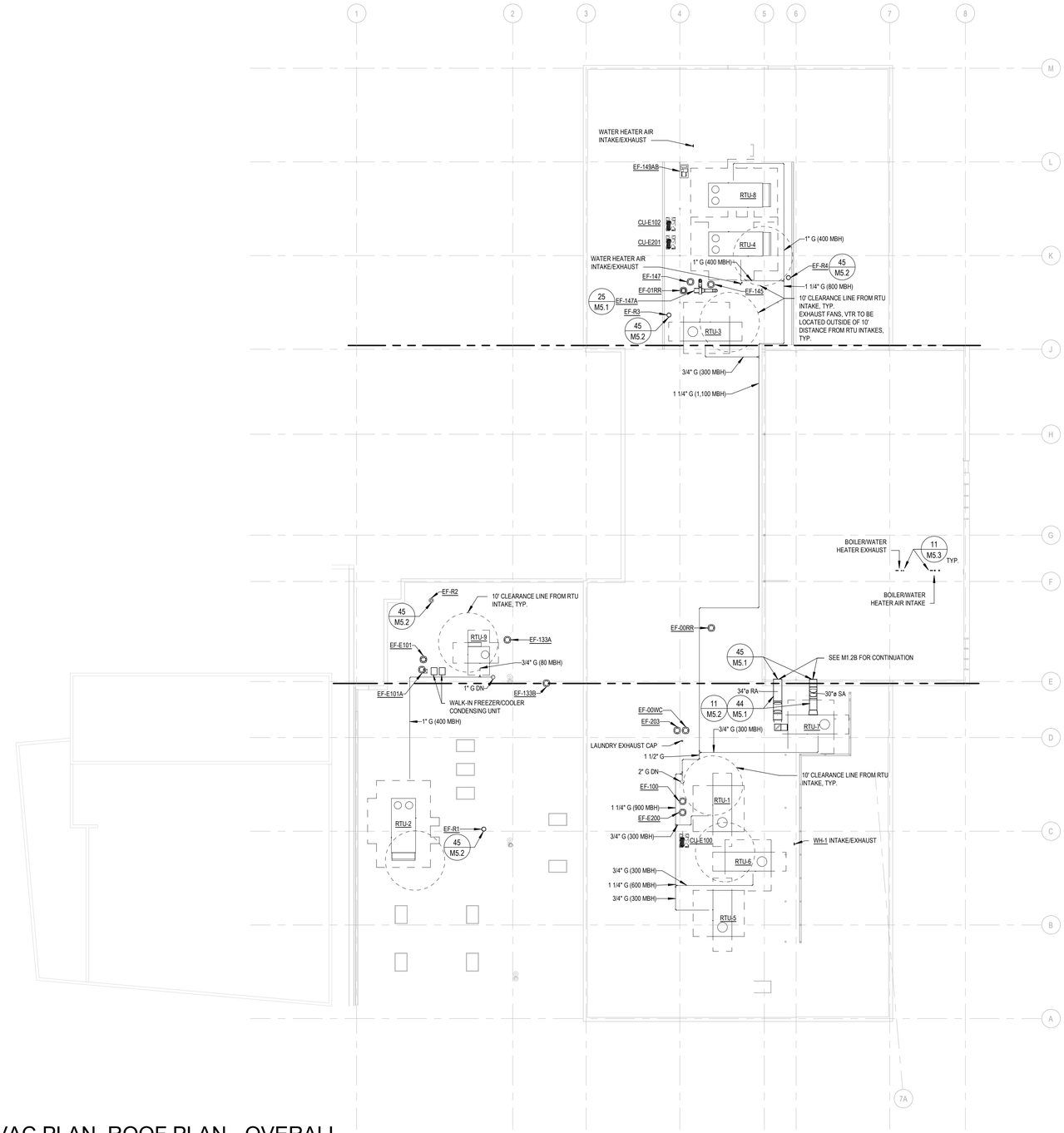

HVAC PLAN, ROOF PLAN - OVERALL

SCALE: 1" = 20'-0"

NORTH

BID/PERMIT SET

CONDITIONAL USE NUMBER: CU2018-0016
DESIGN REVIEW NUMBER: DR2018-0114
SITE DEVELOPMENT PERMIT NUMBER: TBD
BUILDING PERMIT NUMBER: TBD

REGISTERED PROFESSIONAL ENGINEER
84086PE
DIGITAL SIGNATURE
OREGON
MARCH 9, 2018
CHRISTOPHER NARRAMORE

EXPIRES: 12/31/2020

Digitally signed by Chris Narramore
Date: 2019.03.14 08:49:55 -07'00'

HVAC PLAN, ROOF PLAN - OVERALL
ACMA
BEAVERTON SCHOOL DISTRICT

M1.3
74-18109-00
03/14/2019
REVISIONS

KEY PLAN

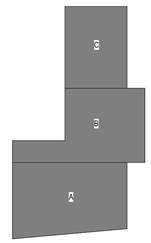

NORTH

DLR Group
Architecture Engineering Planning Interiors

©2019, DLR Group Architecture & Engineering Inc., an Oregon corporation, ALL RIGHTS RESERVED

C:\Revit\74-18109-00_ACMA_MEP_2018_Central_smargolis.rvt
3/13/2019 10:07:48 PM

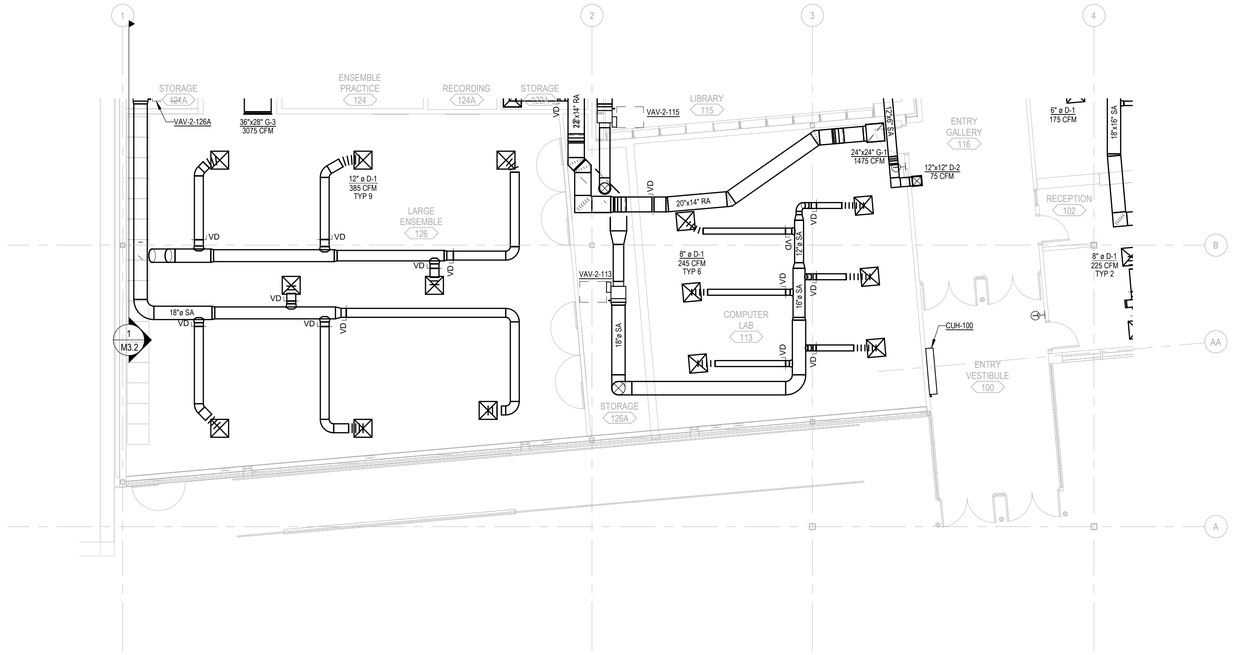

NORTH

HVAC PLAN, LEVEL 1 - AREA A - RAMP DEDUCTIVE ALTERNATE

SCALE: 1/8" = 1'-0"

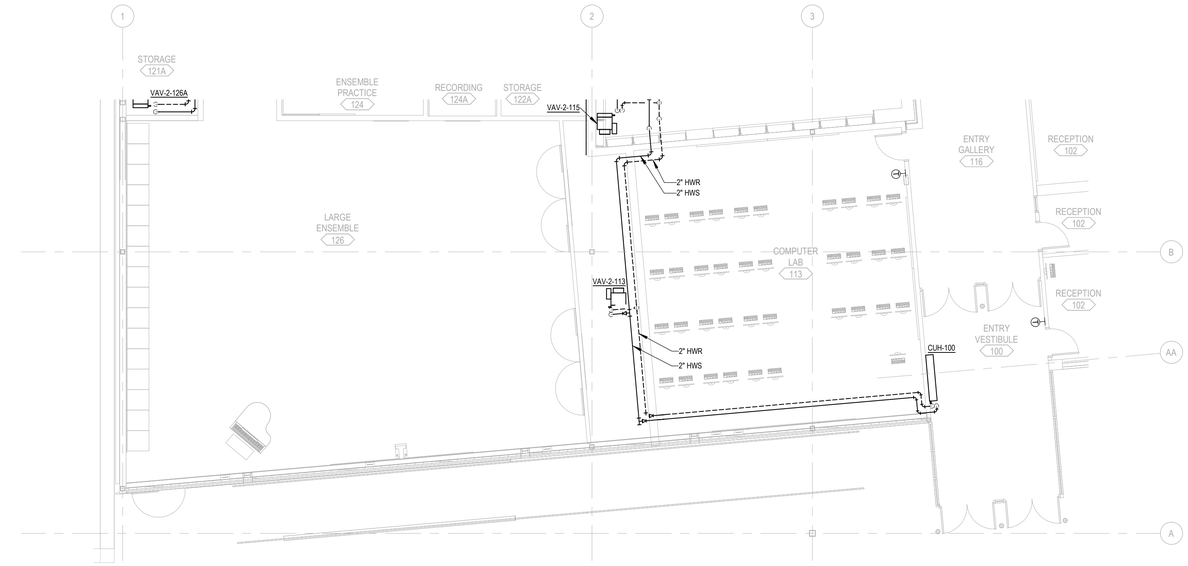

NORTH

PIPING PLAN, LEVEL 1- AREA A RAMP DEDUCTIVE ALTERNATE

SCALE: 1/8" = 1'-0"

BID/PERMIT SET

CONDITIONAL USE NUMBER: CU2018-0016
DESIGN REVIEW NUMBER: DR2018-0114
SITE DEVELOPMENT PERMIT NUMBER: TBD
BUILDING PERMIT NUMBER: TBD

REGISTERED PROFESSIONAL ENGINEER
84086PE
DIGITAL SIGNATURE
OREGON
MARCH 9, 2018
CHRISTOPHER NARRAMORE

EXPIRES: 12/31/2020

Digitally signed by Chris Narramore
Date: 2019.03.14 08:50:03 -07'00'

HVAC - RAMP DEDUCTIVE ALTERNATE
ACMA
BEAVERTON SCHOOL DISTRICT

M1.4
74-18109-00
03/14/2019
REVISIONS

DLR Group
Architecture Engineering Planning Interiors

©2019, DLR Group Architecture & Engineering Inc., an Oregon corporation, ALL RIGHTS RESERVED

C:\Revit\74-18109-00_ACMA_MEP_2018_Central_smargolis.rvt
3/13/2019 10:07:52 PM

LEGEND NOTES

1 PROVIDE VALVE AND STUB FOR PIPE TO NEW CONSTRUCTION DURING FIRST PHASE OF NATURAL GAS SERVICE RELOCATE. AFTER GAS METER HAS BEEN MOVED AND NEW BUILDING IS UP, CONNECT NEW BUILDING PIPING TO STUB.

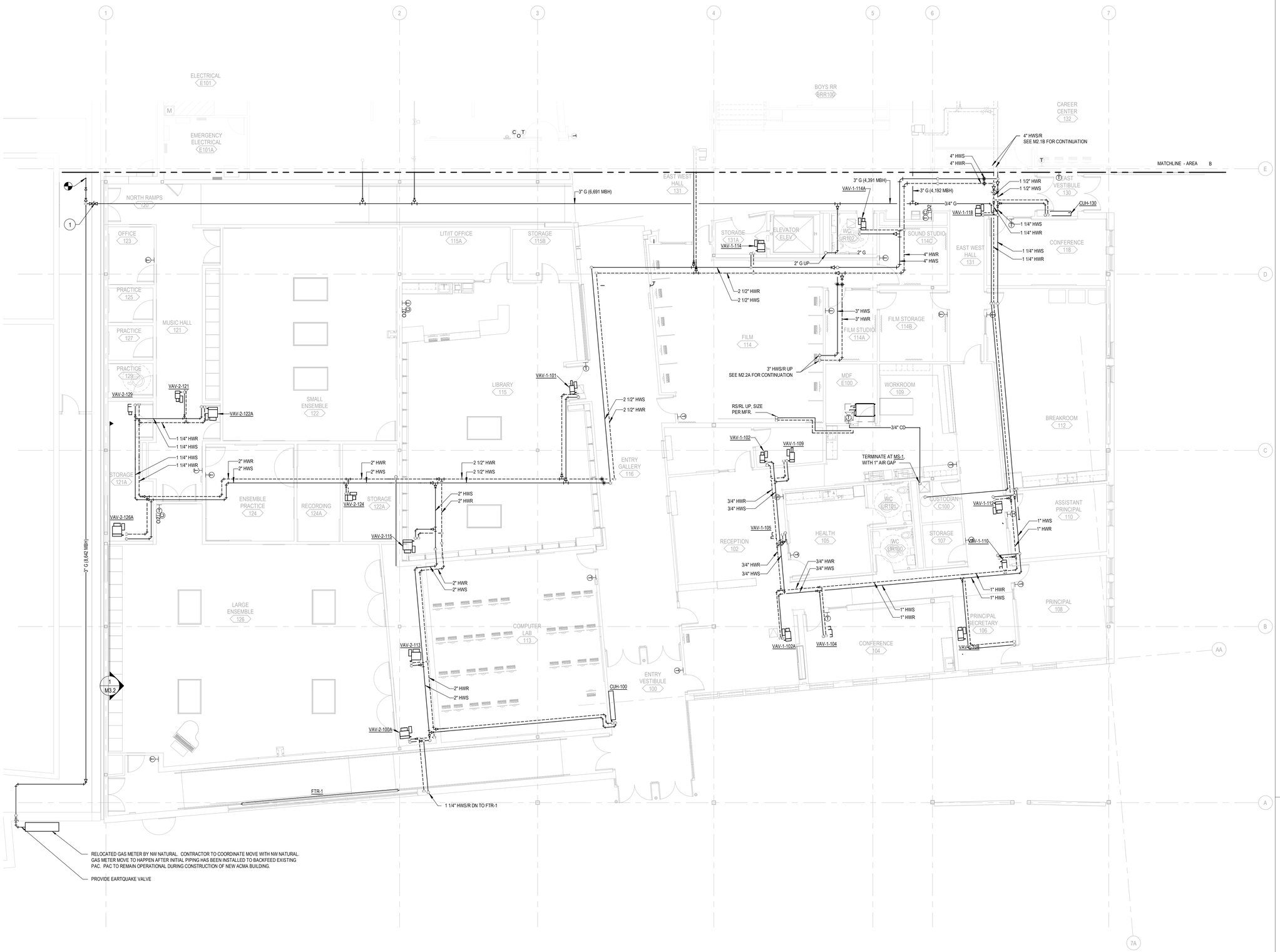

HVAC PIPING PLAN, FIRST LEVEL - AREA A

SCALE: 1/8" = 1'-0"

NORTH

KEY PLAN

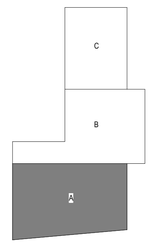

NORTH

BID/PERMIT SET

CONDITIONAL USE NUMBER: CU2018-0016
DESIGN REVIEW NUMBER: DR2018-0114
SITE DEVELOPMENT PERMIT NUMBER: TBD
BUILDING PERMIT NUMBER: TBD

REGISTERED PROFESSIONAL ENGINEER
84086PE
DIGITAL SIGNATURE
OREGON
MARCH 9, 2010
CHRISTOPHER NARRAMORE
EXPIRES: 12/31/2020

Digitally signed by Chris Narramore
Date: 2019.03.14 08:50:33-07'00'

HVAC PIPING PLAN, LEVEL 1 - AREA A
ACMA
BEAVERTON SCHOOL DISTRICT

M2.1A
74-18109-00
03/14/2019
REVISIONS

DLR Group
Architecture Engineering Planning Interiors

©2019, DLR Group Architecture & Engineering Inc., an Oregon corporation, ALL RIGHTS RESERVED

C:\Revit\74-18109-00_ACMA_MEP_2018_Central_smargolis.rvt
3/13/2019 10:07:57 PM

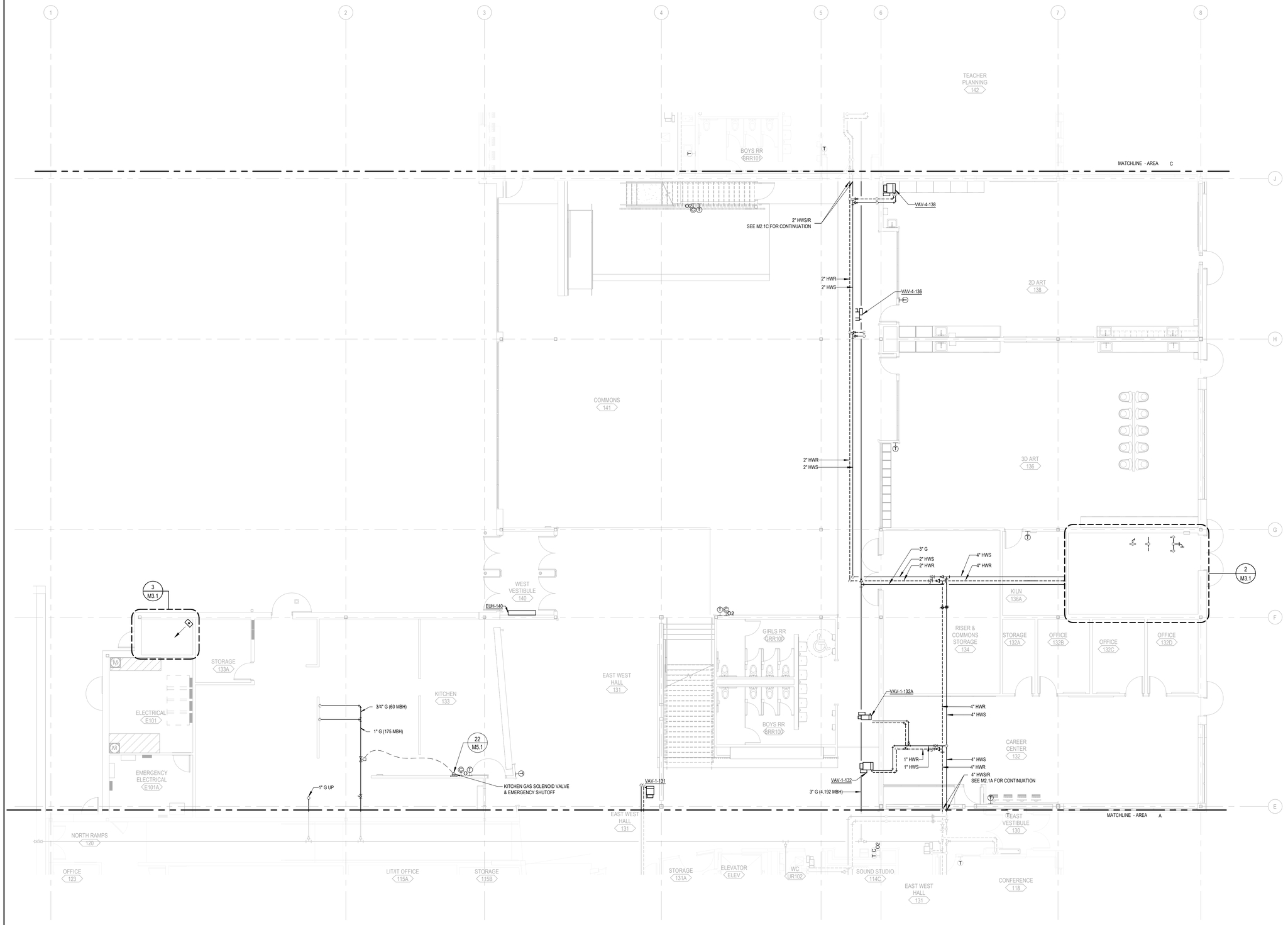
MATCHLINE - AREA C
MATCHLINE - AREA A
TEACHER PLANNING 142
BOYS RR RR101
COMMONS 141
2D ART 138
3D ART 136
KILN 136A
RISER & COMMONS STORAGE 134
STORAGE 132A
OFFICE 132B
OFFICE 132C
OFFICE 132D
CAREER CENTER 132
EAST VESTIBULE 130
WEST VESTIBULE 140
GIRLS RR RR100
BOYS RR RR100
EAST WEST HALL 131
KITCHEN 133
STORAGE 133A
ELECTRICAL E101
EMERGENCY ELECTRICAL E101A
NORTH RAMPS 120
OFFICE 123
LIT/IT OFFICE 115A
STORAGE 115B
STORAGE 131A
ELEVATOR ELEV
WC UR102
SOUND STUDIO 114C
CONFERENCE 118
EAST WEST HALL 131
EAST WEST HALL 131
VAV-4-138
VAV-4-136
VAV-1-132A
VAV-1-132
VAV-1-131
EUH-140
2" HWS/R
SEE M2.1C FOR CONTINUATION
2" HWR
2" HWS
2" HWR
2" HWS
3" G
2" HWS
2" HWR
4" HWS
4" HWR
4" HWR
4" HWS
1" HWR
1" HWS
4" HWS
4" HWR
4" HWS/R
SEE M2.1A FOR CONTINUATION
3" G (4,192 MBH)
3/4" G (60 MBH)
1" G (175 MBH)
1" G UP
KITCHEN GAS SOLENOID VALVE & EMERGENCY SHUTOFF
3 M3.1
22 M5.1
2 M3.1
O21.1
O2
O2
O2

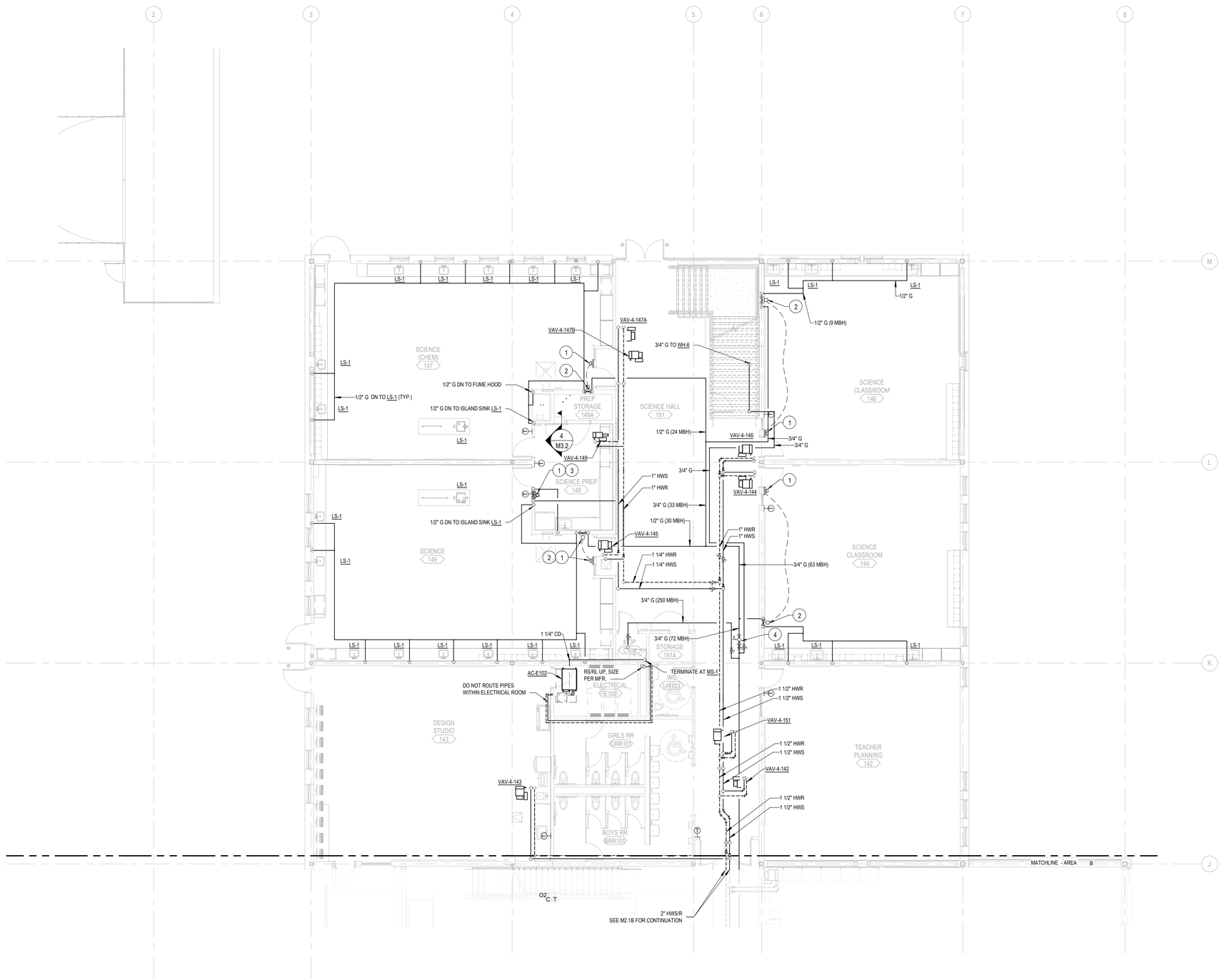

HVAC PIPING PLAN, FIRST LEVEL - AREA C

SCALE: 1/8" = 1'-0"

NORTH

LEGEND NOTES

1. EMERGENCY SHUTOFF BUTTON FOR NATURAL GAS. SEE DETAIL 23/M5.1.
2. 1/2" G DN IN WALL TO SOLENOID VALVE. RUN 1/2" GAS FROM SOLENOID VALVE, IN WALL, UP TO SERVE SCIENCE CLASSROOM. PROVIDE 120V SOLENOID VALVE SV-1 & MOUNT IN WALL CABINET, PROVIDE SHUT-OFF VALVE UPSTREAM AND DOWNSTREAM OF SOLENOID VALVE. REFERENCE DETAIL 24/M5.1.
3. 1/2" G DN IN WALL TO SOLENOID VALVE. RUN 1/2" GAS FROM SOLENOID VALVE, IN WALL, UP TO SERVE SCIENCE CLASSROOM. PROVIDE 120V SOLENOID VALVE SV-1 & MOUNT IN WALL CABINET, PROVIDE SHUT-OFF VALVE UPSTREAM AND DOWNSTREAM OF SOLENOID VALVE. REFERENCE DETAIL 24/M5.1. MOUNT SOLENOID VALVE BOX 12" ABOVE PUSH BUTTON.
4. SET PRV TO 7" W.C. (ADJ.)

BID/PERMIT SET

CONDITIONAL USE NUMBER: CU2018-0016
DESIGN REVIEW NUMBER: DR2018-0114
SITE DEVELOPMENT PERMIT NUMBER: TBD
BUILDING PERMIT NUMBER: TBD

REGISTERED PROFESSIONAL ENGINEER
84086PE
DIGITAL SIGNATURE
OREGON
MARCH 9, 2010
CHRISTOPHER NARRAMORE

EXPIRES: 12/31/2020

Digitally signed by Chris Narramore
Date: 2019.03.14 08:50:53-07'00'

HVAC PIPING PLAN, LEVEL 1 - AREA C
ACMA
BEAVERTON SCHOOL DISTRICT

M2.1C
74-18109-00
03/14/2019
REVISIONS

KEY PLAN

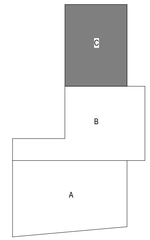

NORTH

DLR Group
Architecture Engineering Planning Interiors

©2019, DLR Group Architecture & Engineering inc., an Oregon corporation, ALL RIGHTS RESERVED

C:\Revit\74-18109-00_ACMA_MEP_2018_Central_smargolis.rvt
3/13/2019 10:08:07 PM



HVAC PIPING PLAN, SECOND LEVEL - AREA A

SCALE: 1/8" = 1'-0"

NORTH

C:\Revit\74-18109-00_ACMA_MEP_2018_Central_smargolis.rvt
3/13/2019 10:08:11 PM

BID/PERMIT SET

CONDITIONAL USE NUMBER: CU2018-0016
DESIGN REVIEW NUMBER: DR2018-0114
SITE DEVELOPMENT PERMIT NUMBER: TBD
BUILDING PERMIT NUMBER: TBD

REGISTERED PROFESSIONAL ENGINEER
84086PE
DIGITAL SIGNATURE
OREGON
MARCH 9, 2019
CHRISTOPHER NARRAMORE

EXPIRES: 12/31/2020

Digitally signed by Chris Narramore
Date: 2019.03.14 08:51:03-07'00'

HVAC PIPING PLAN, LEVEL 2 - AREA A
ACMA
BEAVERTON SCHOOL DISTRICT

M2.2A
74-18109-00
03/14/2019
REVISIONS

KEY PLAN

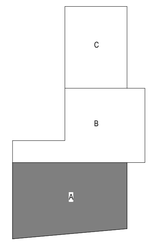

NORTH

DLR Group
Architecture Engineering Planning Interiors

©2019, DLR Group Architecture & Engineering Inc., an Oregon corporation, ALL RIGHTS RESERVED

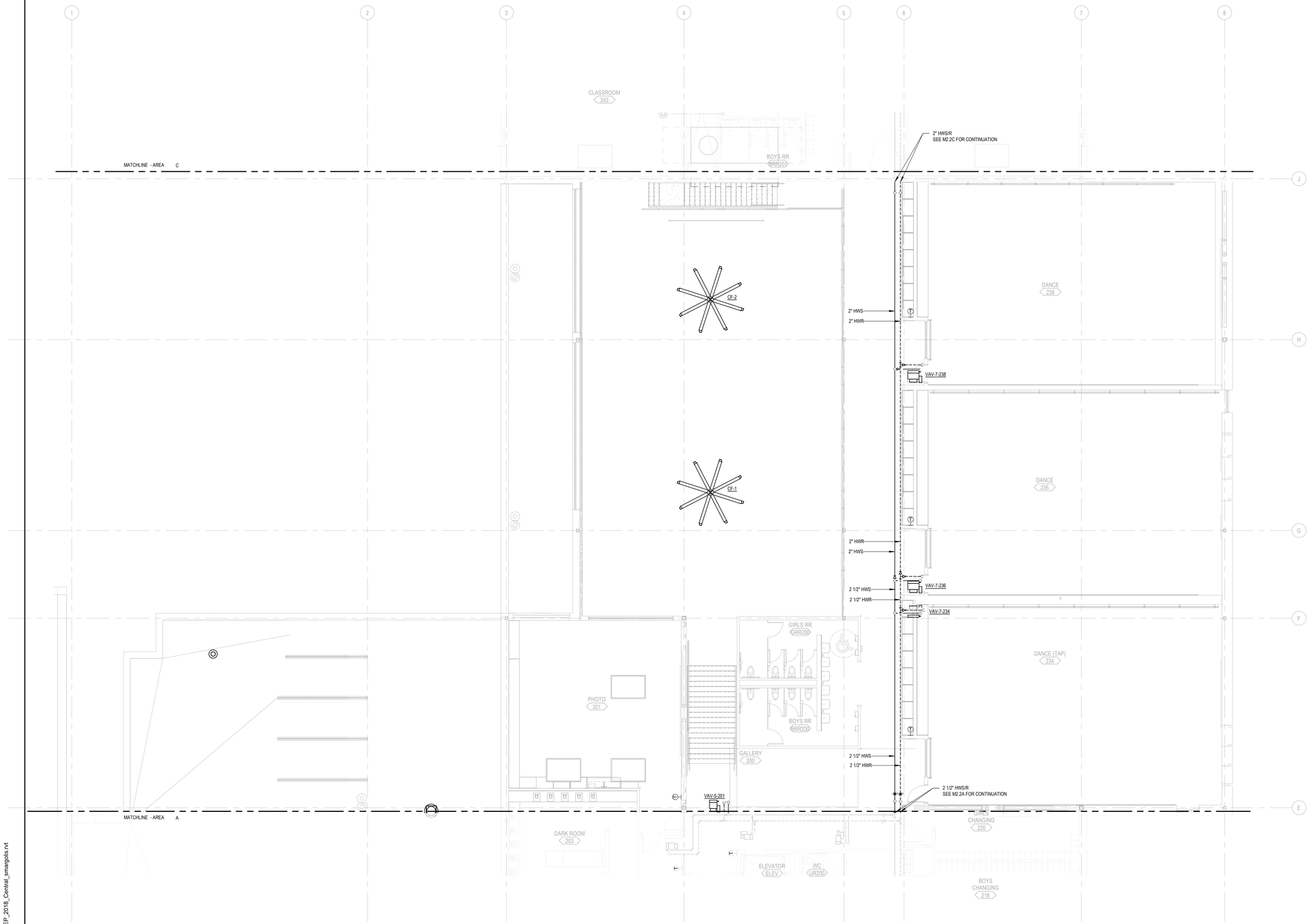

HVAC PIPING PLAN, SECOND LEVEL - AREA B

SCALE: 1/8" = 1'-0"

NORTH

C:\Revit\74-18109-00_ACMA_MEP_2018_Central_smargolis.rvt
3/13/2019 10:08:15 PM

BID/PERMIT SET

CONDITIONAL USE NUMBER: CU2018-0016
DESIGN REVIEW NUMBER: DR2018-0114
SITE DEVELOPMENT PERMIT NUMBER: TBD
BUILDING PERMIT NUMBER: TBD

REGISTERED PROFESSIONAL ENGINEER
84086PE
DIGITAL SIGNATURE
OREGON
MARCH 9, 2019
CHRISTOPHER NARRAMORE

EXPIRES: 12/31/2020

Digitally signed by Chris Narramore
Date: 2019.03.14 08:51:14-07'00'

HVAC PIPING PLAN, LEVEL 2 - AREA B
ACMA
BEAVERTON SCHOOL DISTRICT

M2.2B
74-18109-00
03/14/2019
REVISIONS

KEY PLAN

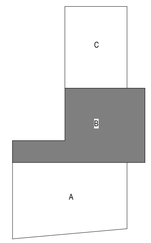

NORTH

DLR Group
Architecture Engineering Planning Interiors

©2019, DLR Group Architecture & Engineering Inc., an Oregon corporation, ALL RIGHTS RESERVED



HVAC PIPING PLAN, SECOND LEVEL - AREA C

SCALE: 1/8" = 1'-0"

NORTH

BID/PERMIT SET

CONDITIONAL USE NUMBER: CU2018-0016
DESIGN REVIEW NUMBER: DR2018-0114
SITE DEVELOPMENT PERMIT NUMBER: TBD
BUILDING PERMIT NUMBER: TBD

REGISTERED PROFESSIONAL ENGINEER
84086PE
DIGITAL SIGNATURE
OREGON
MARCH 9, 2018
CHRISTOPHER NARRAMORE

EXPIRES: 12/31/2020

Digitally signed by Chris Narramore
Date: 2019.03.14 08:51:24 -07'00'

HVAC PIPING PLAN, LEVEL 2 - AREA C
ACMA
BEAVERTON SCHOOL DISTRICT

M2.2C
74-18109-00
03/14/2019
REVISIONS

KEY PLAN

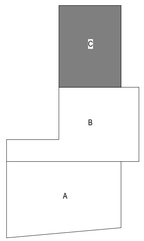

DLR Group
Architecture Engineering Planning Interiors

©2019, DLR Group Architecture & Engineering Inc., an Oregon corporation, ALL RIGHTS RESERVED

C:\Revit\74-18109-00_ACMA_MEP_2018_Central_smargolis.rvt
3/13/2019 10:08:19 PM

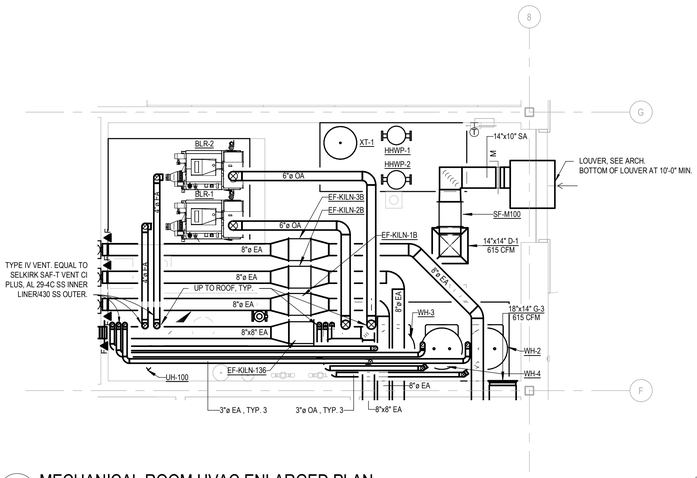

1 M3.1 MECHANICAL ROOM HVAC ENLARGED PLAN
SCALE: 1/4" = 1'-0"

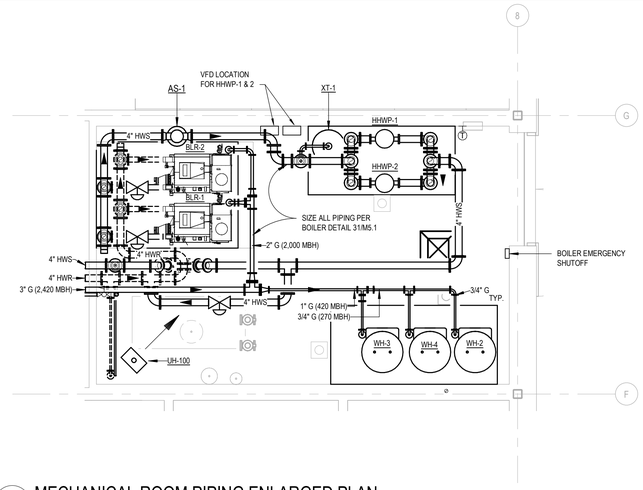

2 M3.1 MECHANICAL ROOM PIPING ENLARGED PLAN
SCALE: 1/4" = 1'-0"

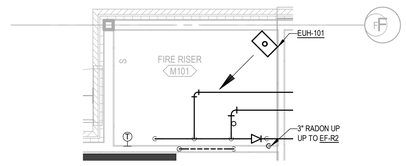

3 M3.1 RISER ROOM ENLARGED PLAN
SCALE: 1/4" = 1'-0"

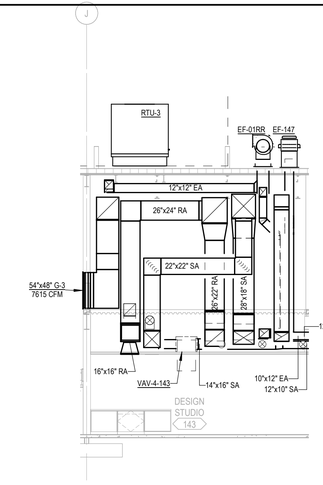

4 M3.1 NORTH MECHANICAL CHASE - SECTION
SCALE: 1/8" = 1'-0"

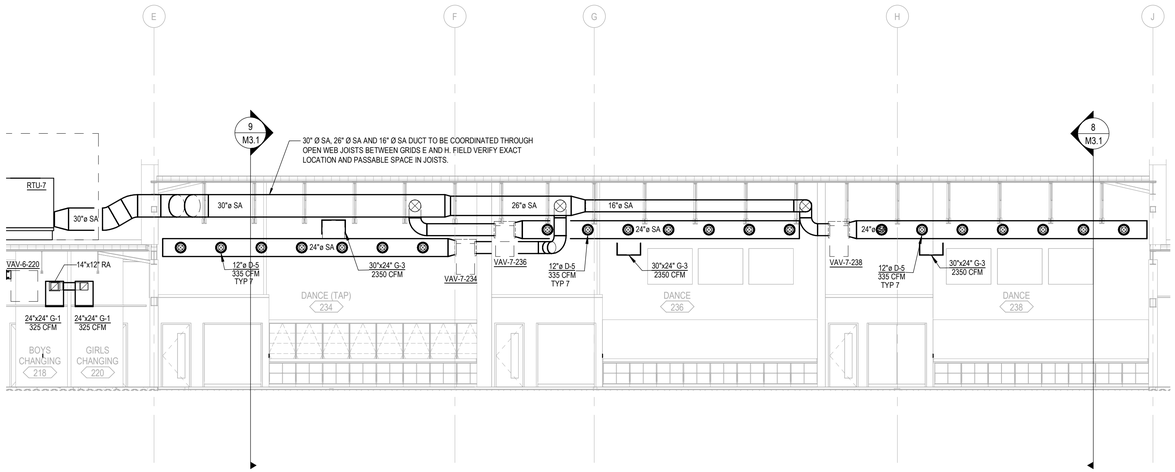

5 M3.1 RTU-7 SUPPLY AND DANCE ROOMS SECTION
SCALE: 1/8" = 1'-0"

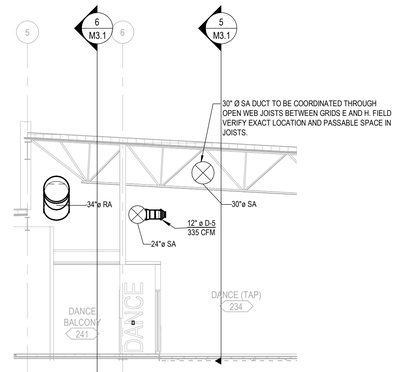

9 M3.1 RTU-7 DANCE AIR DISTRIBUTION SECTION
SCALE: 1/8" = 1'-0"

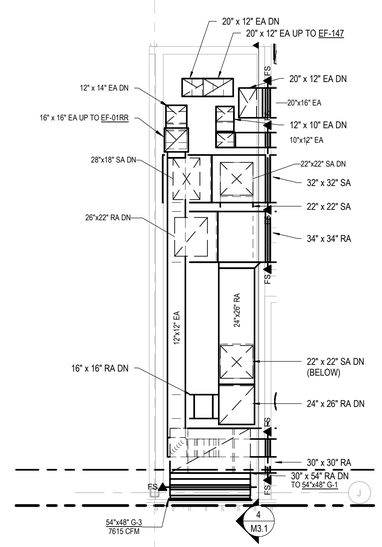

7 M3.1 NORTH MECHANICAL CHASE - PLAN
SCALE: 1/4" = 1'-0"

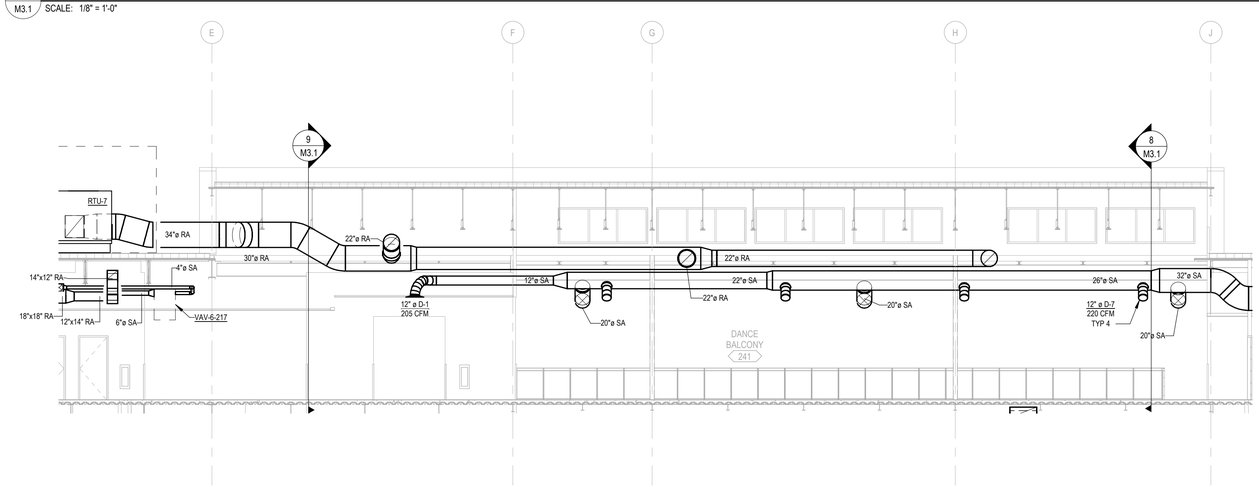

6 M3.1 RTU-7 RETURN AND DANCE BALCONY SECTION
SCALE: 1/8" = 1'-0"

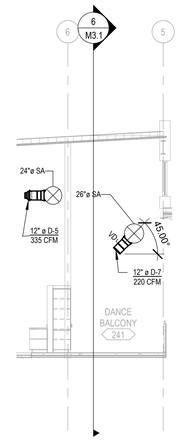

8 M3.1 DANCE & BALCONY DIFFUSER SECTION
SCALE: 1/8" = 1'-0"

C:\Revit\74-18109-00_ACMA_MEP_2018_Central_smargolis.rvt
3/13/2019 10:08:39 PM

BID/PERMIT SET

CONDITIONAL USE NUMBER: CU2018-0016
DESIGN REVIEW NUMBER: DR2018-0114
SITE DEVELOPMENT PERMIT NUMBER: TBD
BUILDING PERMIT NUMBER: TBD

REGISTERED PROFESSIONAL ENGINEER
84086PE
DIGITAL SIGNATURE
OREGON
MARCH 9, 2018
CHRISTOPHER NARRAMORE
EXPIRES: 12/31/2020

Digitally signed by Chris Narramore
Date: 2019.03.14 08:51:36-07'00'

LARGE SCALE MECHANICAL PLANS
ACMA
BEAVERTON SCHOOL DISTRICT

M3.1
74-18109-00
03/14/2019
REVISIONS

DLR Group
Architecture Engineering Planning Interiors

© 2019, DLR Group Architecture & Engineering Inc., an Oregon corporation, ALL RIGHTS RESERVED

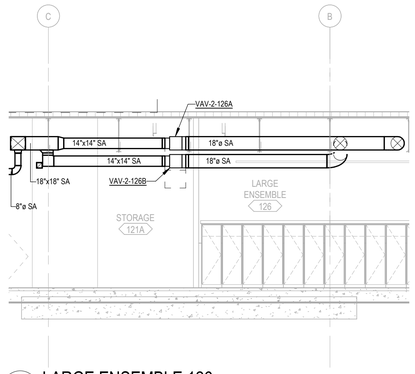

1 M3.2 LARGE ENSEMBLE 126
SCALE: 1/8" = 1'-0"

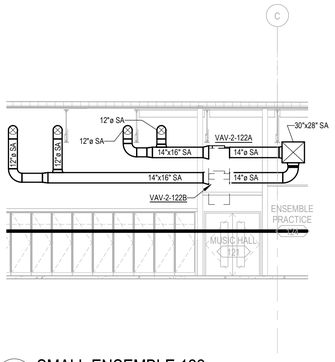

2 M3.2 SMALL ENSEMBLE 122
SCALE: 1/8" = 1'-0"

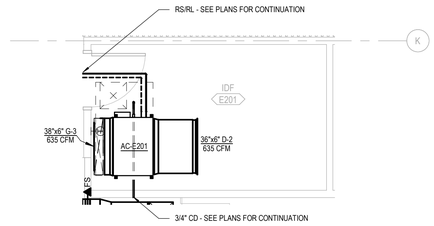

3 M3.2 IDF-E201 ENLARGED PLAN
SCALE: 1/4" = 1'-0"

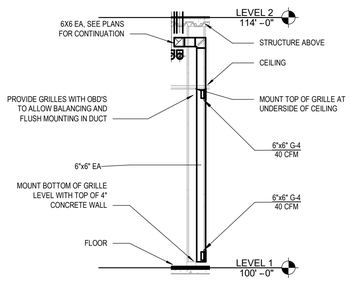

4 M3.2 CHEMICAL STORAGE ROOM EXHAUST ELEVATION
SCALE: 1/4" = 1'-0"

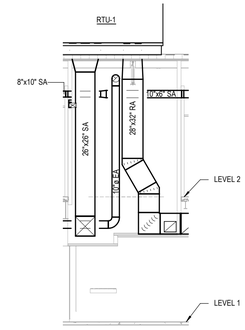

5 M3.2 RTU-1 SECTION
SCALE: 1/8" = 1'-0"

BID/PERMIT SET

CONDITIONAL USE NUMBER: CU2018-0016
DESIGN REVIEW NUMBER: DR2018-0114
SITE DEVELOPMENT PERMIT NUMBER: TBD
BUILDING PERMIT NUMBER: TBD

REGISTERED PROFESSIONAL ENGINEER
84086PE
DIGITAL SIGNATURE
OREGON
MARCH 9, 2018
CHRISTOPHER NARRAMORE

EXPIRES: 12/31/2020

Digitally signed by Chris Narramore
Date: 2019.03.14 08:51:56-07'00'

LARGE SCALE MECHANICAL PLANS
ACMA
BEAVERTON SCHOOL DISTRICT

DLR Group
Architecture Engineering Planning Interiors

M3.2
74-18109-00
03/14/2019
REVISIONS

© 2019, DLR Group Architecture & Engineering Inc., an Oregon corporation, ALL RIGHTS RESERVED

C:\Revit\74-18109-00_ACMA_MEP_2018_Central_smargolis.rvt
3/13/2019 10:08:45 PM

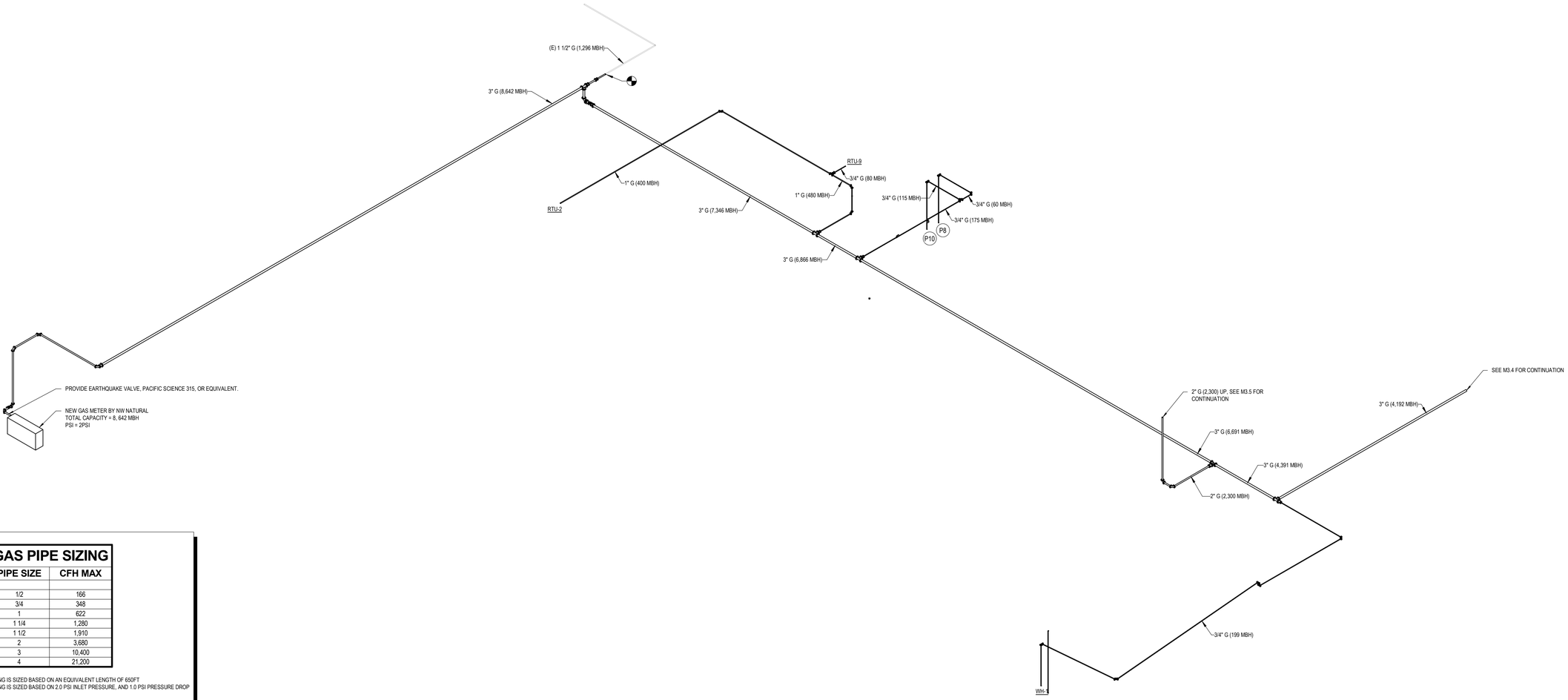

GAS PIPE SIZING

PIPE SIZE	CFH MAX
1/2	166
3/4	348
1	622
1 1/4	1,280
1 1/2	1,910
2	3,680
3	10,400
4	21,200

- PIPING IS SIZED BASED ON AN EQUIVALENT LENGTH OF 650FT
- PIPING IS SIZED BASED ON 2.0 PSI INLET PRESSURE, AND 1.0 PSI PRESSURE DROP

(P##) INDICATES KITCHEN EQUIPMENT. SEE FOOD SERVICE KITCHEN EQUIPMENT SCHEDULE FOR ADDITIONAL REQUIREMENTS.

1 / M3.3 GAS RISER 1ST LEVEL SW
NO SCALE

BID/PERMIT SET

CONDITIONAL USE NUMBER: CU2018-0016
DESIGN REVIEW NUMBER: DR2018-0114
SITE DEVELOPMENT PERMIT NUMBER: TBD
BUILDING PERMIT NUMBER: TBD

REGISTERED PROFESSIONAL ENGINEER
84086PE
DIGITAL SIGNATURE
OREGON
MARCH 9, 2019
CHRISTOPHER NARRAMORE

EXPIRES: 12/31/2020

Digitally signed by Chris Narramore
Date: 2019.03.14 08:52:09-07'00'

NATURAL GAS RISER - FIRST LEVEL SW
ACMA
BEAVERTON SCHOOL DISTRICT

M3.3
74-18109-00
03/14/2019
REVISIONS

DLR Group
Architecture Engineering Planning Interiors

© 2019, DLR Group Architecture & Engineering inc., an Oregon corporation, ALL RIGHTS RESERVED

C:\Revit\74-18109-00_ACMA_MEP_2018_Central_smargolis.rvt
3/13/2019 10:08:48 PM

1 M3.4 / NO SCALE

GAS RISER 1ST LEVEL NE

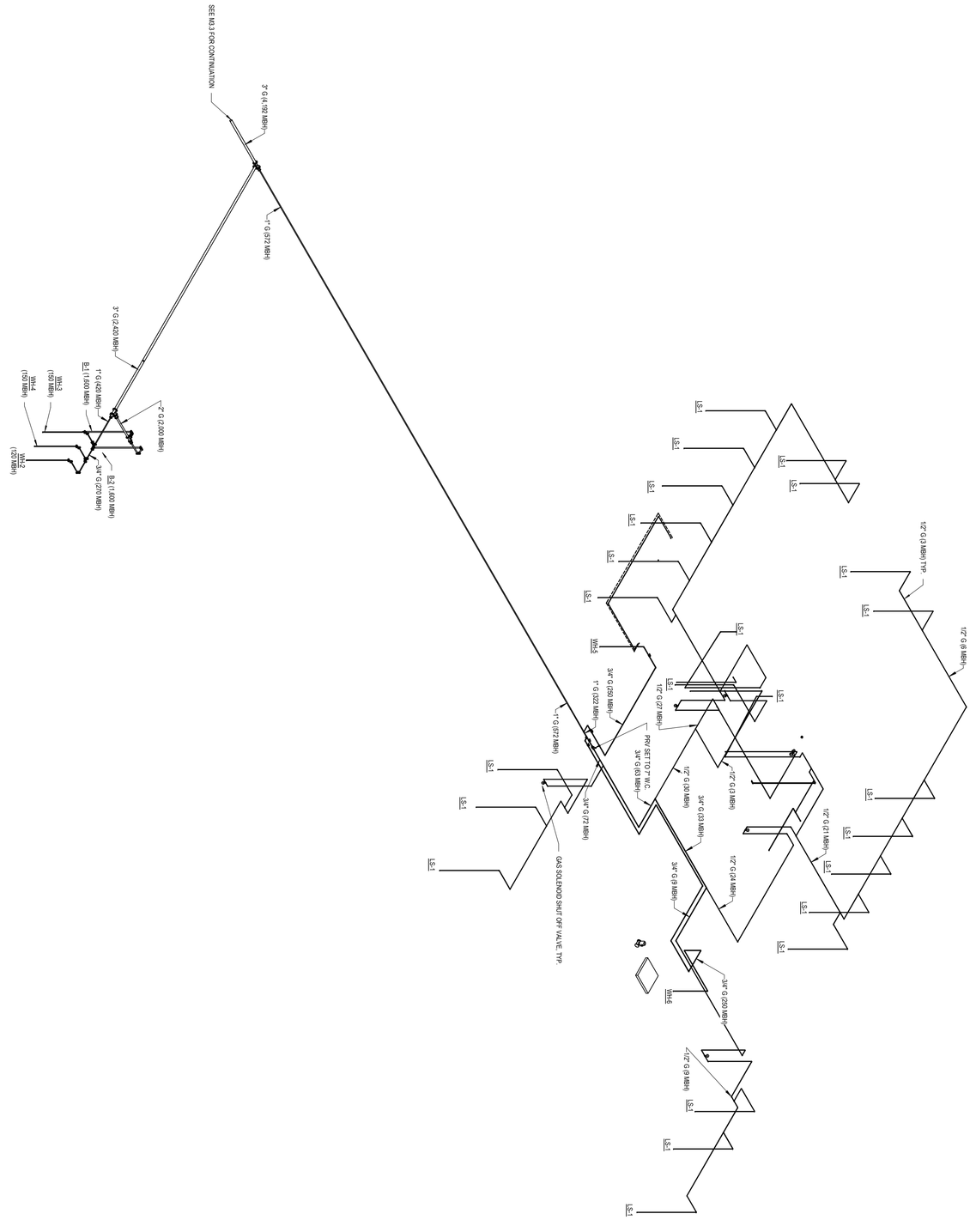
SEE M3.5 FOR CONTINUATION
3" G (4'-0" MIN)
1" G (2'-0" MIN)
4" G (2'-0" MIN)
1-1/4" G (600 MBH)
2" G (1000 MBH)
WH3 (150 MBH)
WH4 (150 MBH)
WH2 (120 MBH)
B-2 (1000 MBH)
3/4" G (270 MBH)
1" G (1250 MBH)
1-1/2" G (2300 MBH)
3/4" G (200 MBH)
1/2" G (70 MBH)
PH-B3 (150 MBH)
3/4" G (100 MBH)
1/2" G (100 MBH)
3/4" G (100 MBH)
1/2" G (100 MBH)
1/2" G (100 MBH)
1/2

C:\Revit\74-18109-00_ACMA_MEP_2018_Central_smargolis.rvt
3/13/2019 10:08:54 PM

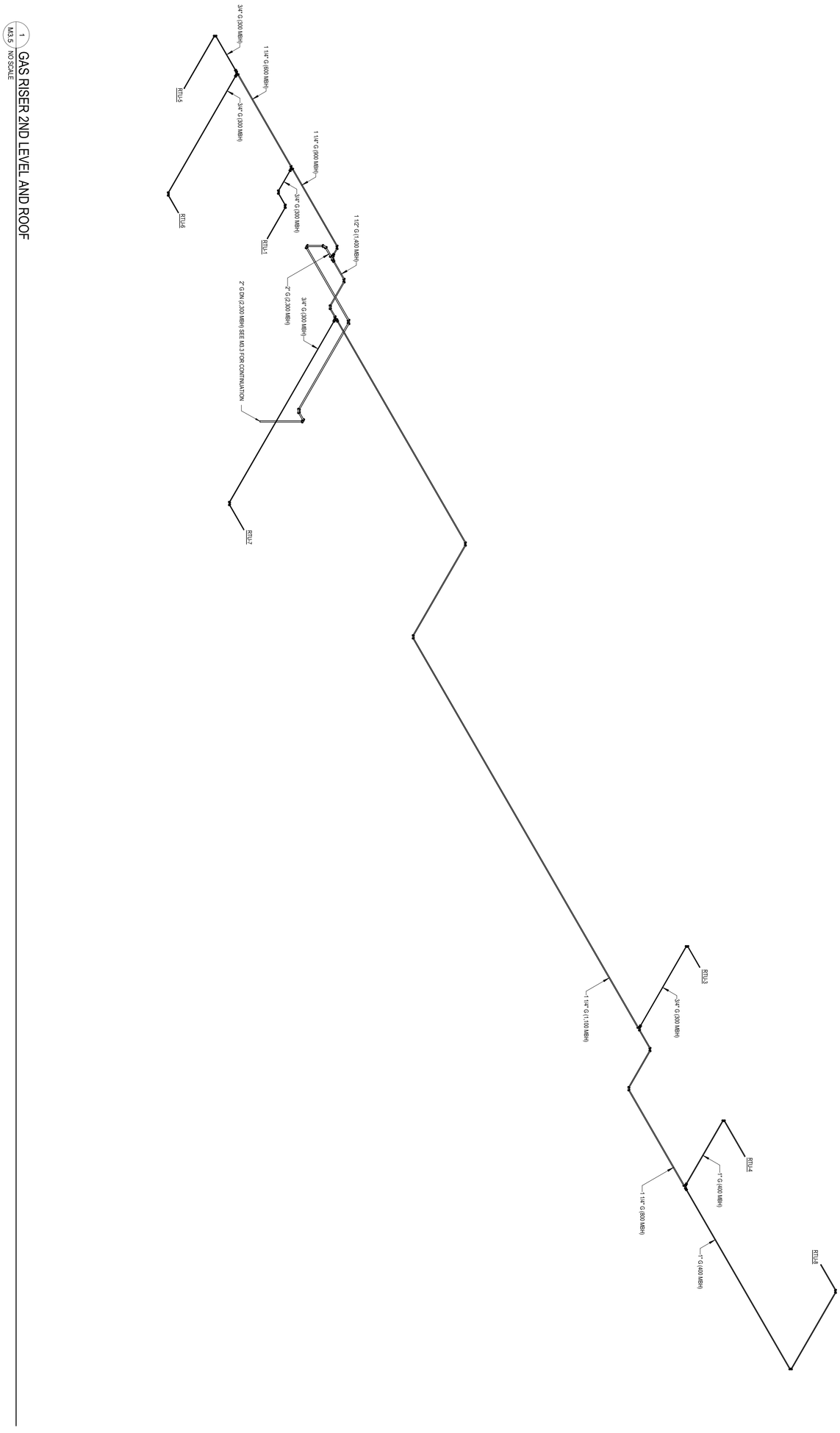

DLR Group
Architecture Engineering Planning Interiors

© 2019, DLR Group Architecture & Engineering inc., an Oregon corporation, ALL RIGHTS RESERVED

M3.5
74-18109-00
03/14/2019
REVISIONS

NATURAL GAS RISER-SECOND LEVEL/ROOF
ACMA
BEAVERTON SCHOOL DISTRICT

REGISTERED PROFESSIONAL ENGINEER
DIGITAL SIGNATURE
OREGON
MARCH 9, 2019
CHRISTOPHER MARRAMORE
EXPIRES: 12/31/2020

Digitally signed by Christopher Marramore
Date: 2019.03.14 09:58:28 -07'00'

BID/PERMIT SET

CONDITIONAL USE NUMBER: CU2018-0016
DESIGN REVIEW NUMBER: DR2018-0114
SITE DEVELOPMENT PERMIT NUMBER: TBD
BUILDING PERMIT NUMBER: TBD

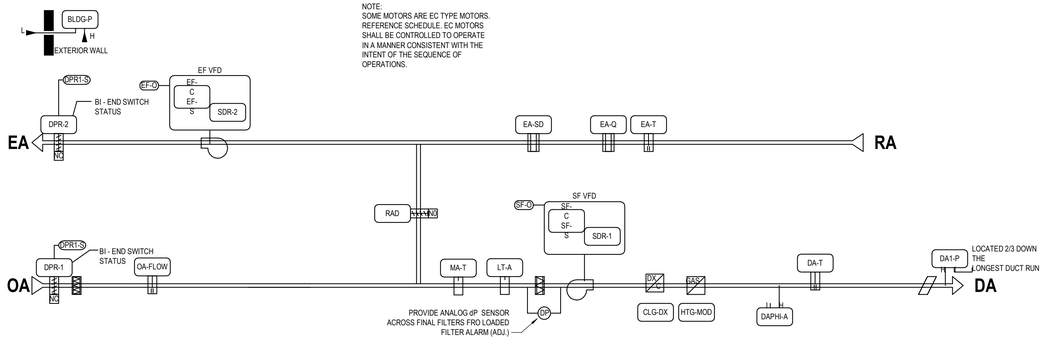

UNIT RUN CONDITIONS - SCHEDULED
THE UNIT SHALL RUN BASED UPON AN OPERATOR ADJUSTABLE SCHEDULE

SUPPLY FAN CONTROL:
UPON A START COMMAND THE SA AND RA ISOLATION DAMPER(S) WILL OPEN. WHEN OPEN STATUS IS ACHIEVED, THE VARIABLE SPEED SUPPLY FAN (SF-C) WILL BE STARTED BASED ON OCCUPANCY. AFTER THE START COMMAND IS SENT (SF-C), AND IN THE OCCUPIED MODE, THE OUTSIDE AIR DAMPER WILL OPEN, AND THE UNIT WILL START WHEN THE DAMPER END SWITCH HAS PROVEN OPEN STATUS. WHEN THE SUPPLY FAN STATUS (SF-S) INDICATES THE FAN STARTED, THE CONTROL SEQUENCE WILL BE ENABLED. THE SUPPLY FAN (SF-O) WILL MODULATE TO MAINTAIN THE DISCHARGE STATIC PRESSURE (DA1-P) AT SETPOINT (DAP-SP). UPON A LOSS OF AIRFLOW (SF-C), THE SUPPLY FAN WILL ATTEMPT TO AUTOMATICALLY RESTART UNTIL POSITIVE STATUS IS RECEIVED. SEE RTU OPTIMAL START FOR MORNING WARMUP CONTROL.

ALARMS SHALL BE PROVIDED AS FOLLOWS:
- SUPPLY FAN FAILURE: COMMANDED ON, BUT THE STATUS IS OFF.
- SUPPLY FAN IN HAND: COMMANDED OFF, BUT THE STATUS IS ON.
- SUPPLY FAN RUNTIME EXCEEDED. STATUS RUNTIME EXCEEDS A USER DEFINABLE LIMIT (ADJ.) (FOR FILTER CHANGE NOTIFICATION).

SUPPLY AIR DUCT STATIC PRESSURE CONTROL:THE CONTROLLER SHALL MEASURE DUCT STATIC PRESSURE AND MODULATE THE SUPPLY FAN VFD SPEED TO MAINTAIN A DUCT STATIC PRESSURE SETPOINT. THE SPEED SHALL NOT DROP BELOW 30% (ADJ.). THE STATIC PRESSURE SETPOINT SHALL BE RESET BASED ON ZONE COOLING REQUIREMENTS.

- THE INITIAL DUCT STATIC PRESSURE SETPOINT SHALL BE 1.75 IN. H2O (ADJ.).
- THE BUILDING AUTOMATION SYSTEM SHALL CONTINUOUSLY MONITOR THE DAMPER POSITION OF ALL VAV TERMINAL UNITS. THE DISCHARGE DUCT STATIC PRESSURE SHALL BE SENSED IN A NON-TURBULENT LOCATION 2/3 OF THE WAY DOWN THE DUCT TEN DUCT WIDTHS FROM ANY ELBOW.
- PRESSURE SETPOINT SHALL BE RESET UPWARD BY 5% (ADJ.) OF THE MAXIMUM SYSTEM STATIC PRESSURE SETPOINT AT A FREQUENCY OF 10 MINUTES (ADJ.) UNTIL NO DAMPER IS MORE THAN 95% OPEN OR THE STATIC PRESSURE SETPOINT HAS RESET UPWARD TO THE SYSTEM MAXIMUM SETTING OR THE VARIABLE FREQUENCY DRIVE ARE AT THEIR MAXIMUM SETTING.
- WHEN ALL DAMPERS ARE LESS THAN 85% (ADJ.) OPEN, THE SUPPLY FAN DISCHARGE DUCT STATIC PRESSURE SETPOINT SHALL BE RESET DOWNWARD BY 5% (ADJ.) OF THE MAXIMUM SYSTEM STATIC PRESSURE SETPOINT AT A FREQUENCY OF 10 MINUTES (ADJ.) UNTIL ANY DAMPER IS MORE THAN 85% OPEN OR THE STATIC PRESSURE SETPOINT HAS RESET DOWNWARD TO THE SYSTEM MINIMUM SETTING OR THE VARIABLE FREQUENCY DRIVE ARE AT THEIR MINIMUM SETTING.
- THE CONTROL BANDS, SETPOINT INCREMENT VALUES, SETPOINT DECREMENT VALUES AND ADJUSTMENT FREQUENCIES SHALL BE ADJUSTED TO MAINTAIN MAXIMUM STATIC PRESSURE OPTIMAZATION WITH STABLE SYSTEM CONTROL AND MAXIMUM COMFORT CONTROL.
- THE CONTRACTOR SHALL SUBMIT A WRITTEN SEQUENCE OF OPERATION AND SAMPLE PROGRAMMING REQUIRED TO DETERMINE THE DUCT STATIC PRESSURE SETPOINT.
- PRIOR TO FINAL SYSTEM ACCEPTANCE, A TREND LOG OF ACTUAL AIR SYSTEM OPERATION OVER A TYPICAL FORTY-EIGHT HOUR PERIOD SHALL BE REQUIRED BY THE ENGINEER AND OWNER. SYSTEM OPERATING CONDITIONS TO BE LOGGED INCLUDE: VAV BOX AIR VALVE POSITIONS, DUCT STATIC PRESSURE, DUCT STATIC PRESSURE SETPOINT AND VARIABLE SPEED DRIVE SPEED INDICATION AT 10-MINUTE INTERVALS.

ALARMS SHALL BE PROVIDED AS FOLLOWS:
- HIGH SUPPLY AIR STATIC PRESSURE: IF THE SUPPLY AIR STATIC PRESSURE IS 25% (ADJ.) GREATER THAN SETPOINT.
- LOW SUPPLY AIR STATIC PRESSURE: IF THE SUPPLY AIR STATIC PRESSURE IS 25% (ADJ.) LESS THAN SETPOINT.
- SUPPLY FAN VFD FAULT.

EXHAUST FAN CONTROL:
AFTER THE EXHUAST FAN (EF-C) HAS BEEN STARTED, THE SA AND RA ISOLATION DAMPER(S) WILL OPEN, AND THE VARIABLE SPEED EXHAUST FAN (EF-C) WILL START WHEN THE DAMPER END SWITCH HAS PROVEN OPEN STATUS AND OUTSIDE AIR DAMPER OPEN AT LEAST 50%. THE EXHAUST FAN (EF-O) WILL MODULATE IN CONJUNCTION WITH THE SUPPLY FAN. EXHAUST FAN SPEED SHALL TRACK SUPPLY FAN SPEED AND HAVE AN OFFSET TO KEEP THE BUILDING POSITIVE. OFFSET SHALL BE CALCULATED BASED ON EXHAUSTS FROM ALL TOILETS AND OTHER EXHAUSTS IN THE SYSTEM. BUILDING SHALL BE KEPT POSITIVE +0.03"WG.

ALARMS SHALL BE PROVIDED AS FOLLOWS:
- EXHAUST FAN FAILURE: COMMANDED ON, BUT THE STATUS IS OFF.
- EXHAUST FAN IN HAND: COMMANDED OFF, BUT THE STATUS IS ON.
- EXHAUST FAN RUNTIME EXCEEDED: STATUS RUNTIME EXCEEDS A USER DEFINABLE LIMIT (ADJ.).
- EXHAUST FAN VFD FAULT.

OCCUPIED SUPPLY AIR TEMPERATURE SETPOINT OPTIMIZED:
THE CONTROLLER SHALL MONITOR THE SUPPLY AIR TEMPERATURE AND SHALL MAINTAIN A SUPPLY AIR TEMPERATURE SETPOINT RESET BASED ON ZONE COOLING AND HEATING REQUIREMENTS
DURING THE OCCUPIED MODE THE SUPPLY AIR TEMPERATURE SETPOINT SHALL BE RESET FOR COOLING BASED ON ZONE COOLING REQUIREMENTS AS FOLLOWS:
- HEATING AND COOLING CONTROL- THE HEATING AND COOLING SHALL MODULATE IN SEQUENCE TO MAINTAIN THE DISCHARGE AIR TEMPERATURE SETPOINT OF 60° F (ADJ.).
- IF THE VARIABLE SPEED DRIVE RAMPS TO 100% (ADJ), THE DISCHARGE AIR SETPOINT SHALL BE RESET 5° F LOWER TO 55° F (ADJ.).
- THE DISCHARGE AIR SETPOINT SHALL REMAIN AT 55° F, UNTIL THE VARIABLE SPEED DRIVE SLOWS TO 90% (ADJ) AT WHICH POINT THE DISCHARGE AIR TEMPERATURE SHALL BE RESET HIGHER BY 5° FOLLOWING THE SEQUENCE IN REVERSE.

OCCUPIED MODE:
THE OCCUPANCY MODE WILL BE CONTROLLED VIA A NETWORK INPUT (OCC-SCHEDULE). THE OCCUPANCY MODE CAN ALSO BE OVERRIDDEN BY A NETWORK INPUT (OCC-OVERRIDE).

UNOCCUPIED MODE:
IN THE UNOCCUPIED MODE THE SUPPLY FAN SHALL RUN ONLY ON A CALL FOR HEATING OR COOLING AND THE OUTSIDE AIR AND EXHAUST DAMPERS SHALL REMAIN CLOSED EXCEPT OUTSIDE AIR/EXHAUST AIR DAMPERS SHALL BE USED AS PART OF ECONOMIZER CYCLE ON CALL FOR COOLING.

RTU OPTIMAL START:
THE UNIT SHALL START PRIOR TO SCHEDULED OCCUPANCY BASED ON THE TIME NECESSARY FOR THE ZONES TO REACH THEIR OCCUPIED SETPOINTS. THE START TIME SHALL AUTOMATICALLY ADJUST BASED ON CHANGES IN OUTSIDE AIR TEMPERATURE AND ZONE TEMPERATURES.

RTU OPTIMAL STOP:COOLING AND HEATING ARE DISABLED TO THE RTU BASED ON THE TIME NECESSARY TO LOSE THEIR OCCUPIED SETPOINTS BY PLUS OR MINUS 4°F (ADJ.). THE FANS SHALL BE ENABLED AND RUN IN THE OCCUPIED MODE. OUTSIDE AIR AND EXHAUST AIR DAMPERS SHALL BE OPERATING AS IN THE OCCUPIED MODE.

UNOCCUPIED OVERRIDE:A TIMED LOCAL OVERRIDE CONTROL SHALL ALLOW AN OCCUPANT TO OVERRIDE THE SCHEDULE AND PLACE THE UNIT INTO AN OCCUPIED MODE FOR AN ADJUSTABLE PERIOD OF TIME. AT THE EXPIRATION OF THIS TIME, CONTROL OF THE UNIT SHALL AUTOMATICALLY RETURN TO THE SCHEDULE. PROVIDE A PANEL OF SWITCHES/BUTTONS TIED TO A LOCAL CONTROLLER IN THE MECHANICAL ROOM WITH COMMUNICATION TO EACH UNIT OVER THE NETWORK.

COOLING STAGES:THE CONTROLLER SHALL MEASURE THE SUPPLY AIR TEMPERATURE AND STAGE AND MODULATE THE DX COOLING TO MAINTAIN ITS COOLING SETPOINT. TO PREVENT SHORT CYCLING, THERE SHALL BE A USER DEFINABLE (ADJ.) DELAY BETWEEN STAGES, AND EACH STAGE SHALL HAVE A USER DEFINABLE (ADJ.) MINIMUM RUNTIME.
COOLING SHALL BE ENABLED WHENEVER:
- OUTSIDE AIR TEMPERATURE IS GREATER THAN 60°F (ADJ.).
- AND THE SUPPLY FAN STATUS IS ON.
- AND HEATING IS NOT ACTIVE.

ALARMS SHALL BE PROVIDED AS FOLLOWS:
HIGH SUPPLY AIR TEMP: IF THE SUPPLY AIR TEMPERATURE IS 5°F (ADJ.) GREATER THAN SETPOINT.

HEATING MODE (GAS):
HEATING SHALL MODULATE TO MAINTAIN THE DISCHARGE AIR TEMPERATURE SETPOINT (DAT-SP). THE CONTROLLER SHALL MEASURE THE SUPPLY AIR TEMPERATURE AND MODULATE THE HEATING TO MAINTAIN ITS HEATING SETPOINT IF THE LEAVING AIR TEMPERATURE FROM THE HEAT EXCHANGER IS LESS THAN THE SUPPLY AIR SETPOINT.
HEATING SHALL BE ENABLED WHENEVER:
- OUTSIDE AIR TEMPERATURE IS LESS THAN 65° F (ADJ.).
- AND THE SUPPLY FAN STATUS IS ON.
- AND THE COOLING IS NOT ACTIVE.

ALARMS SHALL BE PROVIDED AS FOLLOWS:
- LOW SUPPLY AIR TEMP: IF THE SUPPLY AIR TEMPERATURE IS 5°(ADJ.) LESS THAN SETPOINT.

SMOKE DETECTION:THE UNIT SHALL SHUT DOWN AND GENERATE AN ALARM UPON RECEIVING A RETURN AIR SMOKE DETECTOR STATUS. RETURN AIR SMOKE DETECTION ALARM SHALL BE ANNUNCIATED TO THE FIRE ALARM SYSTEM. UNIT SHALL ALSO SHUT DOWN ON SIGNAL FROM THE FIRE ALARM SYSTEM.

SETPOINTS:
SUPPLY AIR SETPOINT= 55°F WITH RESET TO 60°F
MORNING WARM UP-SUPPLY AIR SETPOINT= 80°F (ADJ.)
MORNING COOL DOWN-SUPPLY AIR SETPOINT= 60°F (ADJ.)

EMERGENCY SHUTDOWN:
UPON A SIGNAL BY A MANUAL SWITCH LOCATED IN THE ADMIN AREA, THE RTU UNIT WILL STOP RUNNING. THE RTU WILL RESTART WHEN THE SHUTDOWN SWITCH IS RETURNED TO NORMAL OPERATION.

ADDITIONAL POINTS MONITORED BY THE FMS:
- EXHAUST AIR QUALITY (EA-Q)
- BUILDING STATIC PRESSURE (BLDG-P)
- EXHAUST FAN STATUS (EF-S)

ADDITIONAL ALARM:
- DIFFERENTIAL PRESSURE ALARM (FILT-dP)

TYPE	NAME	DESCRIPTION
AI	BLDG-P	BUILDING STATIC PRESSURE
BO	CLG1-C	COOLING STAGE 1 COMMAND
BO	CLG2-C	COOLING STAGE 2 COMMAND
BO	CLG3-C	COOLING STAGE 3 COMMAND
AI	DA1-P	DISCHARGE AIR STATIC PRESSURE 1
AI	DA-T	DISCHARGE AIR TEMPERATURE
BO	HTG1-C	HEATING STAGE 1 COMMAND
BO	HTG2-C	HEATING STAGE 2 COMMAND
BO	HTG3-C	HEATING STAGE 3 COMMAND
BI	LT-A	LOW TEMPERATURE ALARM
AI	MA-T	MIXED AIR TEMPERATURE
AO	OAD-O	OUTDOOR AIR DAMPER OUTPUT
AI	PFILT-DP	PREFILTER DIFFERENTIAL PRESSURE
AO	RAD-O	RETURN AIR DAMPER OUTPUT
AI	RA-Q	RETURN AIR QUALITY
BO	RLF-C	RELIEF FAN COMMAND
AO	RLF-O	RELIEF FAN OUTPUT
BI	RLF-S	RELIEF FAN STATUS
BO	SF-C	SUPPLY FAN COMMAND
AO	SF-O	SUPPLY FAN OUTPUT
BI	SF-S	SUPPLY FAN STATUS
AI	FILT-dP	FINAL FILTER DIFFERENTIAL PRESSURE SENSOR

1 M4.1 DX VARIABLE AIR VOLUME UNIT (TYP.)
NO SCALE

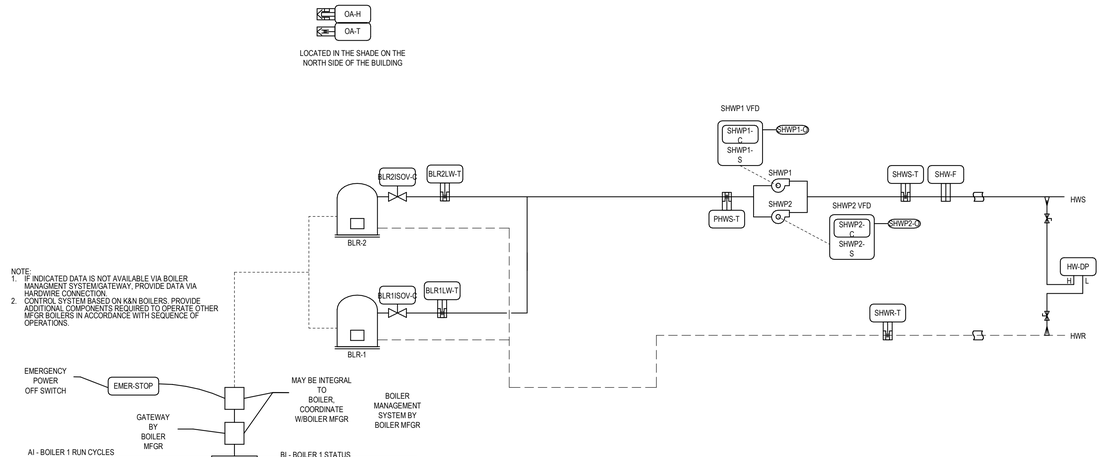

SYSTEM RUN:
THE HEATING SYSTEM WILL AUTOMATICALLY START WHEN THE OUTSIDE AIR TEMPERATURE (OA-T) FALLS BELOW THE SYSTEM ENABLE SETPOINT (HTGOATLOCKOUT-SP) OF 65F AND THERE IS A CALL FOR HEATING WHILE THE SYSTEM ENABLE (SYSTEM-EN) IS "ON". TO PREVENT SHORT CYCLING, EACH BOILER SHALL RUN FOR AND BE OFF FOR MINIMUM ADJUSTABLE TIMES (BOTH USER DEFINABLE), UNLESS SHUTDOWN ON SAFETIES OR OUTSIDE AIR CONDITIONS. EACH BOILER SHALL RUN SUBJECT TO ITS OWN INTERNAL SAFETIES AND CONTROLS. THE BOILER SYSTEM SHALL ALSO RUN FOR FREEZE PROTECTION WHENEVER THE OUTSIDE AIR TEMPERATURE IS LESS THAN 38°F (ADJ.).WHEN THE OUTSIDE AIR TEMPERATURE (OA-T) RISES ABOVE THIS SETPOINT (HTGOATLOCKOUT-SP) OR THE SYSTEM ENABLE (SYSTEM-EN) IS "OFF", THE HEATING SYSTEM WILL BE DISABLED.
SYSTEM SHUTDOWN:
WHEN THE EMERGENCY SHUTDOWN SWITCH (EMER-STOP) IS ACTIVATED, THE HEATING SYSTEM WILL BE SHUTDOWN.
BOILER CONTROL:
THIS SYSTEM CONSISTS OF TWO BOILERS (BLRX-EN). THE BOILERS SHALL BE CONTROLLED VIA THEIR OWN INTERNAL CONTROLLER. TWO BOILERS SHALL OPERATE IN PARTIAL FIRING FASHION AND SHALL BE CONTROLLED BY BOILER MFGR'S BOILER MANAGEMENT SYSTEM (BMS) CAPABLE OF RUNNING WITH NO NETWORK COMMANDS.
- THE LEAD BOILER SHALL RUN FIRST.
- ON FAILURE OF THE LEAD BOILER, THE LAG BOILER SHALL RUN AND THE LEAD BOILER SHALL TURN OFF.
- THE BOILER INTERNAL CONTROLLER SHALL STAGE THE BOILERS , OPEN ASSOCIATED BOILER ISOLATION VALVES. MEET TEMPERATURE SETPOINT AS DETERMINED BY EMCS AND SHALL STAGE BOILERS IN A MANNER WHICH MAXIMIZES OVERALL BOILER PLANT EFFICIENCY. SEQUENCE SHALL BE IN REVERSE ORDER WHEN BOILER IS DE-ENERGIZED.

THE DESIGNATED LEAD BOILER SHALL ROTATE UPON ONE OF THE FOLLOWING CONDITIONS: (USER SELECTABLE):
- MANUALLY THROUGH A SOFTWARE SWITCH
- IF BOILER RUNTIME (ADJ.) IS EXCEEDED
- DAILY
- WEEKLY
- MONTHLY

ALARMS SHALL BE PROVIDED AS FOLLOWS:
BLR-1
- FAILURE: COMMANDED ON, BUT THE STATUS IS OFF.
- RUNNING IN HAND: COMMANDED OFF, BUT THE STATUS IS ON.
- RUNTIME EXCEEDED: STATUS RUNTIME EXCEEDS A USER DEFINABLE LIMIT.

BLR-2
- FAILURE: COMMANDED ON, BUT THE STATUS IS OFF.
- RUNNING IN HAND: COMMANDED OFF, BUT THE STATUS IS ON.
- RUNTIME EXCEEDED: STATUS RUNTIME EXCEEDS A USER DEFINABLE LIMIT.

- LEAD BOILER FAILURE: THE LEAD BOILER IS IN FAILURE AND THE LAG BOILER IS ON.

BOILER 1 & 2 SAFETIES:THE FOLLOWING SAFETIES SHALL BE MONITORED:
1. BOILER ALARM.
2. LOW WATER LEVEL.

ALARMS SHALL BE PROVIDED AS FOLLOWS:
- BOILER ALARM.
- LOW WATER LEVEL ALARM.

PRIMARY LOOP PUMPING (HHWP-1, HHWP-2):
THE LEAD PUMP (HHWPX-C) WILL BE STARTED WHEN THE SYSTEM IS ENABLED. EACH VARIABLE FREQUENCY DRIVE (HHWPX -O) WILL BE MODULATED IN UNISON TO MAINTAIN LOOP PRESSURE (HW-DP). ADDITIONAL PUMPS WILL BE STARTED AS REQUIRED TO MAINTAIN THE DIFFERENTIAL PRESSURE IN THE LOOP. WHEN AN ADDITIONAL PUMP (HHWPX -C) IS REQUIRED, THE PUMP WITH THE LOWEST RUNTIME TOTAL SHALL BE ENABLED TO RUN. IF THE PUMP STATUS (HHWPX -S) DOES NOT MATCH THE COMMAND (HWPX-C), AN ALARM WILL BE GENERATED AND THE PUMP WILL BE STOPPED. UPON LOSS OF STATUS (HHWPX -S), THE PUMP (HHWPX -C) WILL RESTART AFTER THE SYSTEM RESET (SYS-RESET) IS MANUALLY ACTIVATED

ALARMS WILL BE RESET IF EQUIPMENT IN FIELD IS MANUALLY REST.
ALARMS SHALL BE PROVIDED AS FOLLOWS:
HHWP-1
- FAILURE: COMMANDED ON, BUT THE STATUS IS OFF.
- RUNNING IN HAND: COMMANDED OFF, BUT THE STATUS IS ON.
- RUNTIME EXCEEDED: STATUS RUNTIME EXCEEDS A USER DEFINABLE LIMIT.
- VFD FAULT.

HHWP-2
- FAILURE: COMMANDED ON, BUT THE STATUS IS OFF.
- RUNNING IN HAND: COMMANDED OFF, BUT THE STATUS IS ON.
- RUNTIME EXCEEDED: STATUS RUNTIME EXCEEDS A USER DEFINABLE LIMIT.
- VFD FAULT.

HOT WATER DIFFERENTIAL PRESSURE CONTROL:THE CONTROLLER SHALL MEASURE HOT WATER DIFFERENTIAL PRESSURE AT INDICATED LOCATIONS AND MODULATE THE HOT WATER PUMP VFDS IN SEQUENCE TO MAINTAIN ITS HOT WATER DIFFERENTIAL PRESSURE SETPOINT AT BOTH LOCATIONS.

THE FOLLOWING SETPOINTS ARE RECOMMENDED VALUES. ALL SETPOINTS SHALL BE FIELD ADJUSTED DURING BALANCING AND CONFIRMED DURING THE COMMISSIONING PERIOD TO MEET THE REQUIREMENTS OF ACTUAL FIELD CONDITIONS.
- THE CONTROLLER SHALL MODULATE HOT WATER PUMP SPEEDS TO MAINTAIN A HOT WATER DIFFERENTIAL PRESSURE OF 10 LBF/IN2 (ADJ.). THE VFDS MINIMUM SPEED SHALL NOT DROP BELOW 30% (ADJ.).
- FOR MORNING WARMUP ROUTINE, THE CONTROLLER SHALL START AT MAX DP SETPOINT .
- FOR OCCUPIED OR NIGHT TIME LOW LIMIT, THE CONTROLLER SHALL START AT THE MIDDLE OF THE MIN/MAX DP SETPOINT.

HEATING WATER DIFFERENTIAL PRESSURE RESET: DURING OCCUPIED, NIGHTIME LOW-LIMIT AND MORNING WARM UP, POLL HEATING WATER CONTROL VALVES AT 10 MINUTE (ADJ.) INTERVALS.
- IF ZERO CONTROL VALVES ARE AT 100%, DECREASE DP SETPOINT BY 0.5 PSI (ADJ.).
- IF ONE CONTROL VALVE IS AT 100% OPEN, MAINTAIN DP SETPOINT.
- IF TWO OR MORE CONTORLS VALVES ARE AT 100% OPEN, INCREASE DP SETPOINT BY 0.5 PSI (ADJ.).

ALARMS SHALL BE PROVIDED AS FOLLOWS:
- HIGH HOT WATER DIFFERENTIAL PRESSURE: IF 25% (ADJ.) GREATER THAN SETPOINT.
- LOW HOT WATER DIFFERENTIAL PRESSURE: IF 25% (ADJ.) LESS THAN SETPOINT.

HOT WATER SUPPLY TEMPERATURE SETPOINT RESET:THE BAS SHALL DETERMINE HOT WATER SUPPLY TEMPERATURE SETPOINT BASED ON BUILDING LOAD. ALL SETPOINTS SHALL BE ADJUSTABLE.

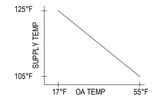

BLR-1 HOT WATER TEMPERATURE MONITORING:THE FOLLOWING TEMPERATURES SHALL BE MONITORED:
- BOILER 1 HOT WATER SUPPLY.
- BOILER 1 HOT WATER RETURN.

ALARMS SHALL BE PROVIDED AS FOLLOWS:
- HIGH HOT WATER SUPPLY TEMP: IF GREATER THAN 200°F (ADJ.).
- LOW HOT WATER SUPPLY TEMP: IF LESS THAN 100°F (ADJ.).

BLR-2 HOT WATER TEMPERATURE MONITORING:THE FOLLOWING TEMPERATURES SHALL BE MONITORED:
- BOILER 2 HOT WATER SUPPLY.
- BOILER 2 HOT WATER RETURN.

ALARMS SHALL BE PROVIDED AS FOLLOWS:
- HIGH HOT WATER SUPPLY TEMP: IF GREATER THAN 200°F (ADJ.).
- LOW HOT WATER SUPPLY TEMP: IF LESS THAN 100°F (ADJ.).

BUILDING LOADTHE CONTROLLER SHALL MONITOR THE FLOW METER AND DETERMINE BUILDING LOAD ON A CONTINUAL BASIS. THESE VALUES SHALL BE MADE AVAILABLE TO THE SYSTEM AT ALL TIMES. THE CONTROLLER SHALL DETERMINE THE FACILITY HEATING LOAD WHERE:
- LOAD (MBTUH) = (HWS TEMP (DEGREES F) - HWR TEMP (DEGREES F)) X FLOW (GPM) X 0.5
- MAIN HOT WATER SUPPLY TEMPERATURE IS MEASURED AT A POINT LEAVING THE BOILER PLANT AND ENTERING THE FACILITY. THIS POINT SHALL BE DOWNSTREAM AND COMMON TO ALL BOILERS.

THE CONTROLLER SHALL DETERMINE THE FACILITY HEATING LOAD FROM:
- HWS FLOW (MAIN HWS LEAVING BOILER PLANT)
- HWS TEMPERATURE (MAIN HWS LEAVING BOILER PLANT)
- HWR TEMPERATURE (MAIN HWR RETURNING TO BOILER PLANT)

ALARM SHALL BE GENERATED AS FOLLOWS:
- METER FAILURE: SENSOR READING INDICATES A LOSS OF PULSE OUTPUT FROM THE FLOW METER.

PEAK DEMAND HISTORY:THE CONTROLLER SHALL MONITOR AND RECORD THE PEAK (HIGH AND LOW) LOADS. PEAK READINGS SHALL BE RECORDED ON A DAILY, MONTH-TO-DATE, AND YEAR-TO-DATE BASIS.
USAGE HISTORY:THE CONTROLLER SHALL MONITOR AND RECORD CALCULATED LOADS SO AS TO PROVIDE AN ENERGY CONSUMPTION HISTORY. USAGE READINGS SHALL BE RECORDED ON A DAILY, MONTH-TO-DATE, AND YEAR-TO-DATE BASIS.
CX:
FOR THE PURPOSE OF CX, USE 100% LOAD = 1250 MBH
ADDITIONAL POINTS MONITORED BY THE FMS:
- BOILER N STATUS (BLRN-S)
- BOILER N ALARM (BLRN-A)
- BOILER N LEAVING WATER TEMPERATURE (BLRNLW-T)
- SECONDARY SUPPLY TEMPERATURE (SHWS-T)
- SECONDARY RETURN TEMPERATURE (SHWR-T)
- SECONDARY FLOW (SHW-F)
- PRIMARY HW SUPPLY TEMPERATURE (PHWS-T)
- PRIMARY HW RETURN TEMPERATURE (PHWR-T)
- OUTDOOR AIR TEMPERATURE (OA-T)
- OUTDOOR AIR HUMIDITY (OA-H)

TYPE	NAME	DESCRIPTION
BI	BLR1-A	BOILER 1 ALARM
BO	BLR1-EN	BOILER 1 ENABLE
BO	BLR1ISOV-C	BOILER 1 ISOLATION VALVE COMMAND
AI	BLR1LW-T	BOILER 1 LEAVING WATER TEMPERATURE
BI	BLR1-S	BOILER 1 STATUS
BI	BLR2-A	BOILER 2 ALARM
BO	BLR2-EN	BOILER 2 ENABLE
BO	BLR2ISOV-C	BOILER 2 ISOLATION VALVE COMMAND
AI	BLR2LW-T	BOILER 2 LEAVING WATER TEMPERATURE
BI	BLR2-S	BOILER 2 STATUS
BI	EMER-STOP	EMERGENCY SHUTDOWN
AI	HW-DP	HOT WATER DIFFERENTIAL PRESSURE
AI	OA-H	OUTDOOR AIR HUMIDITY
AI	OA-T	OUTDOOR AIR TEMPERATURE
BO	PHWP1-C	PRIMARY HW PUMP 1 COMMAND
BI	PHWP1-S	PRIMARY HW PUMP 1 STATUS
BO	PHWP2-C	PRIMARY HW PUMP 2 COMMAND
BI	PHWP2-S	PRIMARY HW PUMP 2 STATUS
AI	PHWR-T	PRIMARY HW RETURN TEMPERATURE
AI	PHWS-T	PRIMARY HW SUPPLY TEMPERATURE
AI	SHW-F	SECONDARY HW FLOW
BO	SHWP1-C	SECONDARY HW PUMP 1 COMMAND
AO	SHWP1-O	SECONDARY HW PUMP 1 OUTPUT
BI	SHWP1-S	SECONDARY HW PUMP 1 STATUS
BO	SHWP2-C	SECONDARY HW PUMP 2 COMMAND
AO	SHWP2-O	SECONDARY HW PUMP 2 OUTPUT
BI	SHWP2-S	SECONDARY HW PUMP 2 STATUS
AI	SHWR-T	SECONDARY HW RETURN TEMPERATURE
AI	SHWS-T	SECONDARY HW SUPPLY TEMPERATURE

2 M4.1 HOT WATER SUPPLY CONTROLS
NO SCALE

BID/PERMIT SET

CONDITIONAL USE NUMBER: CU2018-0016
DESIGN REVIEW NUMBER: DR2018-0114
SITE DEVELOPMENT PERMIT NUMBER: TBD
BUILDING PERMIT NUMBER: TBD

REGISTERED PROFESSIONAL ENGINEER
84086PE
DIGITAL SIGNATURE
OREGON
MARCH 9, 2018
CHRISTOPHER NARRAMORE
EXPIRES: 12/31/2020
Digitally signed by Chris Narramore
Date: 2019.03.14 08:52:42-07'00'

MECHANICAL CONTROLS
ACMA
BEAVERTON SCHOOL DISTRICT

M4.1
74-18109-00
03/14/2019
REVISIONS

DLR Group
Architecture Engineering Planning Interiors

©2019, DLR Group Architecture & Engineering Inc., an Oregon corporation, ALL RIGHTS RESERVED

C:\Revit\74-18109-00_ACMA_MEP_2018_Central_smargolis.rvt
3/13/2019 10:08:57 PM

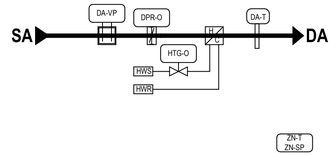

OCCUPIED MODE:
WHEN THE ZONE TEMPERATURE (ZN-T) IS BETWEEN THE OCCUPIED HEATING (EFFHTG-SP) AND COOLING (EFFCLG-SP) SETPOINTS (INSIDE OF THE BIAS), THE PRIMARY AIR DAMPER (DPR-O) WILL BE AT THE MINIMUM CFM (SA-F) AND THERE WILL BE NO MECHANICAL HEATING. ON A RISE IN ZONE TEMPERATURE (ZN-T) ABOVE THE COOLING SETPOINT (EFFCLG-SP), THE PRIMARY AIR DAMPER (DPR-O) WILL INCREASE THE CFM (SA-F) AND THERE WILL BE NO MECHANICAL HEATING. ON A DROP IN ZONE TEMPERATURE (ZN-T) BELOW THE HEATING SETPOINT (EFFHTG-SP), THE REHEAT COIL WILL BE USED TO MAINTAIN THE ZONE TEMPERATURE (ZN-T) AND THE DAMPER (DPR-O) IS CONTROLLED TO PROVIDE A MINIMUM CFM (SA-F). WHEN ADDITIONAL HEATING IS REQUIRED AFTER DISCHARGE AIR TEMPERATURE REACHES THE MAXIMUM SETPOINT OF 85°F (ADJ), ZONE DAMPER SHALL MODULATE BETWEEN MINIMUM COOLING CFM AND MAXIMUM HEATING CFM.
UNOCCUPIED MODE:
WHEN IN THIS MODE, WHILE THE ZONE TEMPERATURE (ZN-T) IS BETWEEN THE UNOCCUPIED HEATING (EFFHTG-SP) AND COOLING (EFFCLG-SP) SETPOINTS (INSIDE OF THE BIAS), THE PRIMARY AIR DAMPER (DPR-O) WILL BE AT THE MINIMUM CFM (SA-F) AND THERE WILL BE NO MECHANICAL HEATING. ON A RISE IN ZONE TEMPERATURE (ZN-T) ABOVE THE UNOCCUPIED COOLING SETPOINT (EFFCLG-SP), THE PRIMARY AIR DAMPER (DPR-O) WILL INCREASE THE CFM (SA-F) (IF AVAILABLE) AND THERE WILL BE NO MECHANICAL HEATING. ON A DROP IN ZONE TEMPERATURE (ZN-T) BELOW THE UNOCCUPIED HEATING SETPOINT (EFFHTG-SP), THE REHEAT COIL WILL BE USED TO MAINTAIN THE ZONE TEMPERATURE (ZN-T) AND THE PRIMARY AIR DAMPER (DPR-O) WILL BE AT THE MINIMUM CFM (SA-F).

OPTIMAL START:
PROVIDE OPTIMAL START ALGORITHM FOR MORNING START-UP. ALGORITHM SHALL MINIMIZE THE UNOCCUPIED WARM-UP/COOL-DOWN PERIOD WHILE STILL ACHIEVING COMFORT CONDITIONS BY THE START OF SCHEDULED OCCUPIED PERIOD. START TIME SHALL AUTOMATICALLY ADJUST BASED ON CHANGES IN OUTSIDE AIR TEMPERATURE AND ZONE TEMPERATURES. START UP SHALL INITIALLY UTILIZE THE MAXIMUM CFM THAT CAN BE DELIVERED TO THE SPACE TO REDUCE THE TIME TO MEET SETPOINTS.

TEMPERATURE SETPOINT:

OCCUPIED MODE:
COOLING: 74° F (ADJ.) PLUS 1°F OFFSET
HEATING: 70° F (ADJ.)* MINUS 1°F OFFSET
DEADBAND = 5°F (MINIMUM DIFFERENCE BETWEEN COOLING AND HEATING SETPOINT)
*WHEN OCCUPANCY SENSOR INDICATES NO OCCUPANCY, SET POINT SHALL BE REDUCED BY 1° F (ADJ.)

UNOCCUPIED MODE:
COOLING: 81° F (ADJ.)
HEATING: 60° F (ADJ.)

ZONE SETPOINT ADJUST:DDC SHALL ADJUST ZONE TEMPERATURE FROM FRONT END. THE OCCUPANT SHALL NOT BE ABLE TO ADJUST THE ZONE TEMPERATURE HEATING AND COOLING SETPOINTS AT THE ZONE SENSOR.

ALARMS:
ALARMS SHALL BE PROVIDED AS FOLLOWS:
HIGH ZONE TEMP: IF THE ZONE TEMPERATURE IS GREATER THAN THE COOLING SETPOINT BY A USER DEFINABLE AMOUNT (ADJ.).
LOW ZONE TEMP: IF THE ZONE TEMPERATURE IS LESS THAN THE HEATING SETPOINT BY A USER DEFINABLE AMOUNT (ADJ.).
UNIT ENABLE:
A NETWORK UNIT ENABLE (UNITEN-MODE) SIGNAL WILL CONTROL THE MODE OF THE BOX.
NETWORK WARMUP-COOLDOWN:
WARM-UP AND COOLDOWN MODES WILL BE ACTIVATED BY A NETWORK COMMAND (WC-C). WHEN THE ZONE TEMPERATURE (ZN-T) IS BELOW THE EFFECTIVE HEATING SETPOINT (EFFHTG-SP), THE BOX WILL USE WARM AIR FLOW, THEN REHEAT COIL TO MAINTAIN THE ZONE TEMPERATURE (ZN-T). WHEN THE BOX IS SATISFIED THE FLOW WILL REMAIN AT THE WARM-UP MINIMUM POSITION UNTIL THE WARM COMMAND HAS BEEN REMOVED.

TYPE	NAME	DESCRIPTION
AI	DA-VP	DISCHARGE AIR VELOCITY PRESSURE
AI	DA-T	DISCHARGE AIR TEMPERATURE
PAO	DPR-O	SUPPLY AIR DAMPER OUTPUT
PAO	HTG-O	HEATING OUTPUT
MO	OCC-MODE	OCCUPANCY STATUS DISPLAY
AI	ZN-SP	ZONE SETPOINT
AI	ZN-T	ZONE TEMPERATURE

1 M4.2 VAV WITH HYDRONIC HEAT
NO SCALE

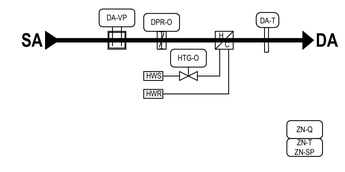

OCCUPIED MODE:
WHEN THE ZONE TEMPERATURE (ZN-T) IS BETWEEN THE OCCUPIED HEATING (EFFHTG-SP) AND COOLING (EFFCLG-SP) SETPOINTS (INSIDE OF THE BIAS), THE PRIMARY AIR DAMPER (DPR-O) WILL BE AT THE MINIMUM CFM (SA-F) AND THERE WILL BE NO MECHANICAL HEATING. ON A RISE IN ZONE TEMPERATURE (ZN-T) ABOVE THE COOLING SETPOINT (EFFCLG-SP), THE PRIMARY AIR DAMPER (DPR-O) WILL INCREASE THE CFM (SA-F) AND THERE WILL BE NO MECHANICAL HEATING. ON A DROP IN ZONE TEMPERATURE (ZN-T) BELOW THE HEATING SETPOINT (EFFHTG-SP), THE REHEAT COIL WILL BE USED TO MAINTAIN THE ZONE TEMPERATURE (ZN-T) AND THE DAMPER (DPR-O) IS CONTROLLED TO PROVIDE A MINIMUM CFM (SA-F). WHEN ADDITIONAL HEATING IS REQUIRED AFTER DISCHARGE AIR TEMPERATURE REACHES THE MAXIMUM SETPOINT OF 85°F (ADJ), ZONE DAMPER SHALL MODULATE BETWEEN MINIMUM COOLING CFM AND MAXIMUM HEATING CFM.
UNOCCUPIED MODE:
WHEN IN THIS MODE, WHILE THE ZONE TEMPERATURE (ZN-T) IS BETWEEN THE UNOCCUPIED HEATING (EFFHTG-SP) AND COOLING (EFFCLG-SP) SETPOINTS (INSIDE OF THE BIAS), THE PRIMARY AIR DAMPER (DPR-O) WILL BE AT THE MINIMUM CFM (SA-F) AND THERE WILL BE NO MECHANICAL HEATING. ON A RISE IN ZONE TEMPERATURE (ZN-T) ABOVE THE UNOCCUPIED COOLING SETPOINT (EFFCLG-SP), THE PRIMARY AIR DAMPER (DPR-O) WILL INCREASE THE CFM (SA-F) (IF AVAILABLE) AND THERE WILL BE NO MECHANICAL HEATING. ON A DROP IN ZONE TEMPERATURE (ZN-T) BELOW THE UNOCCUPIED HEATING SETPOINT (EFFHTG-SP), THE REHEAT COIL WILL BE USED TO MAINTAIN THE ZONE TEMPERATURE (ZN-T) AND THE PRIMARY AIR DAMPER (DPR-O) WILL BE AT THE MINIMUM CFM (SA-F).
CO2 FLOW RESET:
THE CO2 LEVEL IN THE ZONE (ZN-Q) WILL BE MONITORED AND WILL RESET THE MINIMUM FLOW SETPOINTS FOR THE BOX AS SCHEDULED. ON RISING CO2 CONCENTRATIONS, OVERRIDING NORMAL DAMPER OPERATION TO MAINTAIN A CO2 SETPOINT OF NOT MORE THAN 800 PPM (ADJ.).
ALARMS SHALL BE PROVIDED AS FOLLOWS: HIGH ZONE CARBON DIOXIDE CONCENTRATION: IF THE ZONE CO2 CONCENTRATION IS GREATER THAN 1000 PPM (ADJ.).

OPTIMAL START:
PROVIDE OPTIMAL START ALGORITHM FOR MORNING START-UP. ALGORITHM SHALL MINIMIZE THE UNOCCUPIED WARM-UP/COOL-DOWN PERIOD WHILE STILL ACHIEVING COMFORT CONDITIONS BY THE START OF SCHEDULED OCCUPIED PERIOD. START TIME SHALL AUTOMATICALLY ADJUST BASED ON CHANGES IN OUTSIDE AIR TEMPERATURE AND ZONE TEMPERATURES. START UP SHALL INITIALLY UTILIZE THE MAXIMUM CFM THAT CAN BE DELIVERED TO THE SPACE TO REDUCE THE TIME TO MEET SETPOINTS.

TEMPERATURE SETPOINT:

OCCUPIED MODE:
COOLING: 74° F (ADJ.) PLUS 1°F OFFSET
HEATING: 70° F (ADJ.)* MINUS 1°F OFFSET
DEADBAND = 5°F (MINIMUM DIFFERENCE BETWEEN COOLING AND HEATING SETPOINT)
*WHEN OCCUPANCY SENSOR INDICATES NO OCCUPANCY, SET POINT SHALL BE REDUCED BY 1° F (ADJ.)

UNOCCUPIED MODE:
COOLING: 81° F (ADJ.)
HEATING: 60° F (ADJ.)

ZONE SETPOINT ADJUST:DDC SHALL ADJUST ZONE TEMPERATURE FROM FRONT END. THE OCCUPANT SHALL NOT BE ABLE TO ADJUST THE ZONE TEMPERATURE HEATING AND COOLING SETPOINTS AT THE ZONE SENSOR.

ALARMS:
ALARMS SHALL BE PROVIDED AS FOLLOWS:
HIGH ZONE TEMP: IF THE ZONE TEMPERATURE IS GREATER THAN THE COOLING SETPOINT BY A USER DEFINABLE AMOUNT (ADJ.).
LOW ZONE TEMP: IF THE ZONE TEMPERATURE IS LESS THAN THE HEATING SETPOINT BY A USER DEFINABLE AMOUNT (ADJ.).
UNIT ENABLE:
A NETWORK UNIT ENABLE (UNITEN-MODE) SIGNAL WILL CONTROL THE MODE OF THE BOX.
NETWORK WARMUP-COOLDOWN:
WARM-UP AND COOLDOWN MODES WILL BE ACTIVATED BY A NETWORK COMMAND (WC-C). WHEN THE ZONE TEMPERATURE (ZN-T) IS BELOW THE EFFECTIVE HEATING SETPOINT (EFFHTG-SP), THE BOX WILL USE WARM AIR FLOW, THEN REHEAT COIL TO MAINTAIN THE ZONE TEMPERATURE (ZN-T). WHEN THE BOX IS SATISFIED THE FLOW WILL REMAIN AT THE WARM-UP MINIMUM POSITION UNTIL THE WARM COMMAND HAS BEEN REMOVED.

TYPE	NAME	DESCRIPTION
AI	DA-VP	DISCHARGE AIR VELOCITY PRESSURE
AI	DA-T	DISCHARGE AIR TEMPERATURE
PAO	DPR-O	SUPPLY AIR DAMPER OUTPUT
PAO	HTG-O	HEATING OUTPUT
MO	OCC-MODE	OCCUPANCY STATUS DISPLAY
AI	ZN-Q	ZONE CO2
AI	ZN-SP	ZONE SETPOINT
AI	ZN-T	ZONE TEMPERATURE

2 M4.2 VAV WITH HYDRONIC HEAT & CO2
NO SCALE

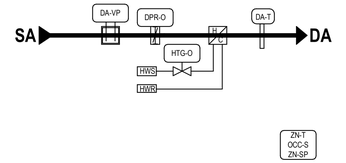

OCCUPIED MODE:
WHEN THE ZONE TEMPERATURE (ZN-T) IS BETWEEN THE OCCUPIED HEATING (EFFHTG-SP) AND COOLING (EFFCLG-SP) SETPOINTS (INSIDE OF THE BIAS), THE PRIMARY AIR DAMPER (DPR-O) WILL BE AT THE MINIMUM CFM (SA-F) AND THERE WILL BE NO MECHANICAL HEATING. ON A RISE IN ZONE TEMPERATURE (ZN-T) ABOVE THE COOLING SETPOINT (EFFCLG-SP), THE PRIMARY AIR DAMPER (DPR-O) WILL INCREASE THE CFM (SA-F) AND THERE WILL BE NO MECHANICAL HEATING. ON A DROP IN ZONE TEMPERATURE (ZN-T) BELOW THE HEATING SETPOINT (EFFHTG-SP), THE REHEAT COIL WILL BE USED TO MAINTAIN THE ZONE TEMPERATURE (ZN-T) AND THE DAMPER (DPR-O) IS CONTROLLED TO PROVIDE A MINIMUM CFM (SA-F). WHEN ADDITIONAL HEATING IS REQUIRED AFTER DISCHARGE AIR TEMPERATURE REACHES THE MAXIMUM SETPOINT OF 85°F (ADJ), ZONE DAMPER SHALL MODULATE BETWEEN MINIMUM COOLING CFM AND MAXIMUM HEATING CFM.
UNOCCUPIED MODE:
WHEN IN THIS MODE, WHILE THE ZONE TEMPERATURE (ZN-T) IS BETWEEN THE UNOCCUPIED HEATING (EFFHTG-SP) AND COOLING (EFFCLG-SP) SETPOINTS (INSIDE OF THE BIAS), THE PRIMARY AIR DAMPER (DPR-O) WILL BE AT THE MINIMUM CFM (SA-F) AND THERE WILL BE NO MECHANICAL HEATING. ON A RISE IN ZONE TEMPERATURE (ZN-T) ABOVE THE UNOCCUPIED COOLING SETPOINT (EFFCLG-SP), THE PRIMARY AIR DAMPER (DPR-O) WILL INCREASE THE CFM (SA-F) (IF AVAILABLE) AND THERE WILL BE NO MECHANICAL HEATING. ON A DROP IN ZONE TEMPERATURE (ZN-T) BELOW THE UNOCCUPIED HEATING SETPOINT (EFFHTG-SP), THE REHEAT COIL WILL BE USED TO MAINTAIN THE ZONE TEMPERATURE (ZN-T) AND THE PRIMARY AIR DAMPER (DPR-O) WILL BE AT THE MINIMUM CFM (SA-F).
OCCUPANCY CONTROL:
OCCUPANCY SENSOR WILL BE READ THROUGH AN EXTRA DRY CONTACT ON OCCUPANCY/VACANCY SENSOR FURNISHED BY DIV. 26. CONTROL WIRING FOR HVAC TO THIS CONTACT WILL BE BY DIV. 23. DURING SCHEDULED OCCUPIED MODE, WHEN NO OCCUPANCY IS DETECTED FOR 10 MINS (ADJ), MIN AIRFLOW WILL BE RESET TO SPACE MIN AIRFLOW VALUE LISTED ON VAV SCHEDULE. TEMPERATURE SETPOINT WILL STILL REMAIN PER MODE. THIS STRATEGY INTENDS TO REDUCE EXCESS AIRFLOW/CONDITIONING WHEN OCCUPANT-BASED VENTILATION AIRFLOW IS NOT NECESSARY. UPON DETECTION OF OCCUPANCY, MINIMUM CFM WILL BE RAISED BACK TO OCCUPIED MIN. CFM VALUE.

OPTIMAL START:
PROVIDE OPTIMAL START ALGORITHM FOR MORNING START-UP. ALGORITHM SHALL MINIMIZE THE UNOCCUPIED WARM-UP/COOL-DOWN PERIOD WHILE STILL ACHIEVING COMFORT CONDITIONS BY THE START OF SCHEDULED OCCUPIED PERIOD. START TIME SHALL AUTOMATICALLY ADJUST BASED ON CHANGES IN OUTSIDE AIR TEMPERATURE AND ZONE TEMPERATURES. START UP SHALL INITIALLY UTILIZE THE MAXIMUM CFM THAT CAN BE DELIVERED TO THE SPACE TO REDUCE THE TIME TO MEET SETPOINTS.

TEMPERATURE SETPOINT:

OCCUPIED MODE:
COOLING: 74° F (ADJ.) PLUS 1°F OFFSET
HEATING: 70° F (ADJ.)* MINUS 1°F OFFSET
DEADBAND = 5°F (MINIMUM DIFFERENCE BETWEEN COOLING AND HEATING SETPOINT)
*WHEN OCCUPANCY SENSOR INDICATES NO OCCUPANCY, SET POINT SHALL BE REDUCED BY 1° F (ADJ.)

UNOCCUPIED MODE:
COOLING: 81° F (ADJ.)
HEATING: 60° F (ADJ.)

ZONE SETPOINT ADJUST:DDC SHALL ADJUST ZONE TEMPERATURE FROM FRONT END. THE OCCUPANT SHALL NOT BE ABLE TO ADJUST THE ZONE TEMPERATURE HEATING AND COOLING SETPOINTS AT THE ZONE SENSOR.

ALARMS:
ALARMS SHALL BE PROVIDED AS FOLLOWS:
HIGH ZONE TEMP: IF THE ZONE TEMPERATURE IS GREATER THAN THE COOLING SETPOINT BY A USER DEFINABLE AMOUNT (ADJ.).
LOW ZONE TEMP: IF THE ZONE TEMPERATURE IS LESS THAN THE HEATING SETPOINT BY A USER DEFINABLE AMOUNT (ADJ.).
UNIT ENABLE:
A NETWORK UNIT ENABLE (UNITEN-MODE) SIGNAL WILL CONTROL THE MODE OF THE BOX.
NETWORK WARMUP-COOLDOWN:
WARM-UP AND COOLDOWN MODES WILL BE ACTIVATED BY A NETWORK COMMAND (WC-C). WHEN THE ZONE TEMPERATURE (ZN-T) IS BELOW THE EFFECTIVE HEATING SETPOINT (EFFHTG-SP), THE BOX WILL USE WARM AIR FLOW, THEN REHEAT COIL TO MAINTAIN THE ZONE TEMPERATURE (ZN-T). WHEN THE BOX IS SATISFIED THE FLOW WILL REMAIN AT THE WARM-UP MINIMUM POSITION UNTIL THE WARM COMMAND HAS BEEN REMOVED.

TYPE	NAME	DESCRIPTION
AI	DA-VP	DISCHARGE AIR VELOCITY PRESSURE
AI	DA-T	DISCHARGE AIR TEMPERATURE
PAO	DPR-O	SUPPLY AIR DAMPER OUTPUT
PAO	HTG-O	HEATING OUTPUT
MO	OCC-MODE	OCCUPANCY STATUS DISPLAY
BI	OCC-S	OCCUPANCY STATUS
AI	ZN-SP	ZONE SETPOINT
AI	ZN-T	ZONE TEMPERATURE

3 M4.2 VAV WITH HYDRONIC HEAT & OCC SENSOR
NO SCALE

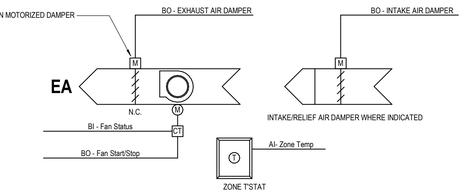

NOTE:
1. REFERENCE FAN SCHEDULE FOR FANS CONTROLLED THUS.
2. THERMOSTATICALLY CONTROLLED SUPPLY FANS CONTROLLED SIMILARLY.

THERMOSTATICALLY CONTROLLED EXHAUST FAN SEQUENCE OF OPERATIONS - KILN ROOM
4 M4.2
NO SCALE

RUN CONDITIONS - CONTINUOUS:
THE UNIT SHALL BE CONTINUOUSLY ENABLED TO MAINTAIN A ZONE TEMPERATURE COOLING SETPOINT OF 85°F (ADJ.).

ALARMS SHALL BE PROVIDED AS FOLLOWS:
- HIGH ZONE TEMP: IF THE ZONE TEMPERATURE IS GREATER THAN THE COOLING SETPOINT BY 10 MINUTES (ADJ.).

FAN:
THE FAN SHALL RUN ANYTIME THE ZONE TEMPERATURE RISES ABOVE COOLING SETPOINT AND EXHAUST DAMPER AND INTAKE/RELIEF DAMPER, WHERE INDICATED, IS PROVED OPEN, UNLESS SHUTDOWN ON SAFETIES.

EXHAUST AIR DAMPER:
THE EXHAUST AIR DAMPER WILL OPEN ANYTIME THE FAN RUN STATUS IS CONFIRMED AND WILL CLOSE ANYTIME THE FAN STOPS. THE EXHAUST AIR DAMPER WILL CLOSE 30 SECONDS (ADJ.) AFTER THE FAN STOPS. FAILURE OF CONFIRMATION OF DAMPER STATUS BEING OPEN WILL PREVENT
THE OPERATION OF THE EXHAUST FAN. EXHAUST DAMPER WILL CLOSE IF THE EXHAUST FAN STATUS IS NOT CONFIRMED AFTER A USER DEFINED LIMIT OF
20 SECONDS (ADJ)
ALARMS SHALL BE PROVIDED AS FOLLOWS:
- DAMPER FAILURE: COMMANDED OPEN, BUT THE STATUS IS CLOSED.

INTAKE/RELIEF AIR DAMPER:
THE INTAKE/RELIEF AIR DAMPER SHALL OPEN ANYTIME THE FAN RUNS AND SHALL CLOSE ANYTIME THE FAN STOPS. THE INTAKE/RELIEF AIR DAMPER SHALL CLOSE 30 SEC (ADJ.) AFTER THE FAN STOPS.

FAN STATUS:
THE CONTROLLER SHALL MONITOR THE FAN STATUS.

ALARMS SHALL BE PROVIDED AS FOLLOWS:
- FAN FAILURE: COMMANDED ON, BUT THE STATUS IS OFF.
- FAN IN HAND: COMMANDED OFF, BUT THE STATUS IS ON.
- FAN RUNTIME EXCEEDED: FAN STATUS RUNTIME EXCEEDS A USER DEFINABLE LIMIT (ADJ.).
- DAMPER FAILURE: COMMANDED OPEN, BUT DAMPER IS CLOSED.

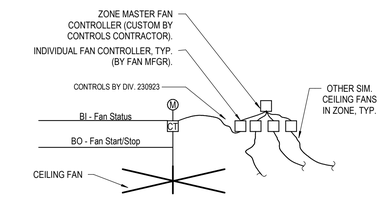

RUN CONDITIONS - SCHEDULED:
THE FAN SHALL RUN ACCORDING TO A USER DEFINABLE SCHEDULE THAT INCLUDES DEFINABLE FAN SPEED.

RUN CONDITIONS - WALL SWITCH:
EACH ZONE WILL HAVE ONE WALL SWITCH PROVIDED BY AS PART OF 230923 WORK TO CONTROL ALL FANS WITHIN A ZONE (COMMONS). WALL SWITCH SHALL CONTROL MANUAL ON/OFF OVERRIDE AND ADJUST FAN SPEED. TIMER OVERRIDE FOR 0-4 HOURS. THIS IS NOT TO BE A TOUCHSCREEN, BUT A SIMPLE CUSTOM 4X4 SS WALL PLATE WITH BASIC FUNCTIONALITY.

FAN STATUS:
THE CONTROLLER SHALL MONITOR THE FAN STATUS.
ALARMS SHALL BE PROVIDED AS FOLLOWS:
- FAN FAILURE: COMMANDED ON, BUT THE STATUS IS OFF.
- FAN IN HAND: COMMANDED OFF, BUT THE STATUS IS ON.

FIRE ALARM MODE:
A GENERAL FIRE ALARM RELAY SHALL BE CONNECTED TO EACH ZONES CONTROLER SUCH THAT ALL FANS WILL TURNED OFF DURING A FIRE ALARM EVENT (INCLUDING DURING OVERRIDE). AFTER EVENT, FANS CAN BE TURNED ON VIA WALL SWITCH AND WILL REVERT BACK TO NORMAL OPERATION THE FOLLOWING DAY UPON DAILY RESET.

5 M4.2 SCHEDULED CEILING FAN CONTROLS (CF-1,-2)
NO SCALE

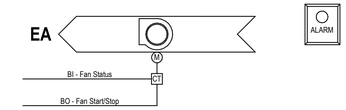

RUN CONDITIONS - SCHEDULED:
THE FAN SHALL RUN ACCORDING TO A USER DEFINABLE SCHEDULE.

FAN STATUS:
THE CONTROLLER SHALL MONITOR THE FAN STATUS. AN ALARM WILL BE SENT TO BEAVERTON SCHOOL DISTRICT THROUGH THE DDC SYSTEM.

ALARMS SHALL BE PROVIDED AS FOLLOWS:
- FAN FAILURE: COMMANDED ON, BUT THE STATUS IS OFF.
- FAN IN HAND: COMMANDED OFF, BUT THE STATUS IS ON.

NOTE:
REFERENCE FAN SCHEDULE FOR FANS CONTROLLED THUS.

6 M4.2 RADON EXHAUST FAN CONTROLS
NO SCALE

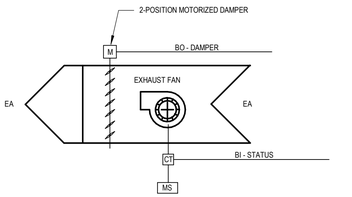

WALL SWITCH WITH PILOT LIGHT, BI MOUNTED AT KITCHEN HOOD AND OTHER LOCATIONS AS INDICATED.

SEQUENCE: EXHAUST FAN:

RUN CONDITIONS - SWITCHED:
THE UNIT SHALL RUN WHEN SWITCH IS ON.

DAMPER:
DAMPER SHALL BE INTERLOCKED TO OPEN ANYTIME THE FAN IS COMMANDED TO RUN.

NOTE:
REFERENCE FAN SCHEDULE FOR FANS CONTROLLED THUS.

7 M4.2 EXHAUST FAN - SWITCHED
NO SCALE

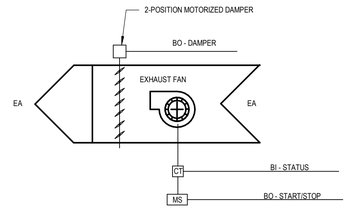

SEQUENCE: SCHEDULED EXHAUST FAN:

RUN CONDITIONS - SCHEDULED:
THE FAN SHALL RUN ACCORDING TO A USER DEFINABLE SCHEDULE.

FAN:
THE FAN SHALL HAVE A USER DEFINABLE (ADJ.) MINIMUM RUNTIME OF 30 MINUTES.

EXHAUST AIR DAMPER:
THE EXHAUST AIR DAMPER WILL OPEN ANYTIME THE FAN RUN STATUS IS CONFIRMED AND WILL CLOSE ANYTIME THE FAN STOPS. THE EXHAUST AIR DAMPER WILL CLOSE 30 SECONDS (ADJ.) AFTER THE FAN STOPS. EXHAUST DAMPER WILL CLOSE IF THE EXHAUST FAN STATUS IS NOT CONFIRMED AFTER A USER DEFINED LIMIT OF 20 SECONDS (ADJ)

FAN STATUS:
THE CONTROLLER SHALL MONITOR THE FAN STATUS.
ALARMS SHALL BE PROVIDED AS FOLLOWS:
- FAN FAILURE: COMMANDED ON, BUT THE STATUS IS OFF.
- FAN IN HAND: COMMANDED OFF, BUT THE STATUS IS ON.
- FAN RUNTIME EXCEEDED: FAN STATUS RUNTIME EXCEEDS A USER DEFINABLE LIMIT (ADJ.).

NOTE:
REFERENCE FAN SCHEDULE FOR FANS CONTROLLED THUS.

8 M4.2 EXHAUST FAN - SCHEDULED
NO SCALE

BID/PERMIT SET

CONDITIONAL USE NUMBER: CU2018-0016
DESIGN REVIEW NUMBER: DR2018-0114
LAND USE FINAL APPROVAL NUMBER: TBD
BUILDING PERMIT NUMBER: TBD

REGISTERED PROFESSIONAL ENGINEER
DIGITAL SIGNATURE
OREGON
MARCH 9, 2010
CHRISTOPHER NARRAMORE
EXPIRES: 12/31/2020

Digitally signed by Chris Narramore
Date: 2019.03.14 08:52:53-07'00'

MECHANICAL CONTROLS
ACMA
BEAVERTON SCHOOL DISTRICT

M4.2
74-18109-00
03/14/2019
REVISIONS

DLR Group
Architecture Engineering Planning Interiors

©2019, DLR Group Architecture & Engineering Inc., an Oregon corporation, ALL RIGHTS RESERVED

C:\Revit\74-18109-00_ACMA_MEP_2018_Central_smargolis.rvt
3/13/2019 10:09:00 PM

SCIENCE LAB GAS EMERGENCY SHUTOFF:
UPON ACTIVATON OF *SCIENCE LAB GAS* EMERGENCY SHUTOFF,..... ALARM WILL BE SENT TO BMS INDICATING ACTIVATION OF *SCIENCE LAB GAS* EMERGENCY SHUTOFF. GAS SHALL BE ABLE TO BE RESET BACK TO ORDINARY OPERATING MODE VIA BMS. SEE 23 AND 24 / M5.1 FOR WIRING AND PROGRAMMING PROVIDED BY 230923.

PANIC DETECTION

PANIC1-A

WALK-IN COOLER/FREEZER MONITORING:
TEMPERATURE MONITORING:THE CONTROLLER SHALL MONITOR THE WALK-IN COOLER TEMPERATURE ON A CONTINUAL BASIS. VALUES FOR EACH COOLER SHALL BE MADE AVAILABLE TO THE SYSTEM AT ALL TIMES.
ALARM SHALL BE GENERATED AS FOLLOWS:
- *HIGH TEMPERATURE: TEMPERATURE WITHIN COOLER EXCEEDS USER DEFINABLE SETPOINT.*

TEMPERATURE HISTORY:THE CONTROLLER SHALL MONITOR AND RECORD TEMPERATURE READINGS SO AS TO PROVIDE A TEMPERATURE PROFILE HISTORY FOR EACH COOLER. TEMPERATURE READINGS SHALL BE RECORDED ON AN HOURLY, DAILY, MONTH-TO-DATE, AND YEAR-TO-DATE BASIS.

MISC TEMPS

CLR1-T FZR1-T

FIRE ALARM INPUTS

FCP-A
FCP-TBL
FIRE PANEL

CARBON MONOXIDE MONITORING:
CARBON MONOXIDE SENSOR SHALL MONITOR CARBON MONOXIDE LEVELS IN KITCHEN AREA. IF CARBON MONOXIDE LEVELS EXCEED 50 PPM (ADJ.), SENSOR SHALL SEND AN ALARM TO BMS SYSTEM. CONFIRM LOCATION OF SENSOR WITH ARCHITECT.

MISC KITCHEN

CO-A

GAS METER:*THE CONTROLLER SHALL MONITOR THE GAS METER FOR GAS CONSUMPTION ON A CONTINUAL BASIS. THESE VALUES SHALL BE MADE AVAILABLE TO THE SYSTEM AT ALL TIMES.*

ALARM SHALL BE GENERATED AS FOLLOWS:
- *METER FAILURE: SENSOR READING INDICATES A LOSS OF PULSE OUTPUT FROM THE GAS METER.*

PEAK DEMAND HISTORY:THE CONTROLLER SHALL MONITOR AND RECORD THE PEAK (HIGH AND LOW) DEMAND READINGS FROM EACH GAS METER. PEAK READINGS SHALL BE RECORDED ON A DAILY, MONTH-TO-DATE, AND YEAR-TO-DATE BASIS.

USAGE HISTORY:THE CONTROLLER SHALL MONITOR AND RECORD GAS METER READINGS SO AS TO PROVIDE A GAS CONSUMPTION HISTORY. USAGE READINGS SHALL BE RECORDED ON A DAILY, MONTH-TO-DATE, AND YEAR-TO-DATE BASIS.

NATURAL GAS ITEMS

NATURAL GAS PANEL
NG-F

ADDITIONAL POINTS MONITORED/CONTROLLED BY THE FMS:
- PIPE 1 FLOW (PIPE1-F)
- PIPE 2 FLOW (PIPE2-F)
- NATURAL GAS FLOW (NG-F)
- COOLER 1 TEMPERATURE (CLR1-T)
- FREEZER 1 TEMPERATURE (FZR1-T)
- FIRE CONTROL PANEL ALARM (FCP-A)
- FIRE CONTROL PANEL TROUBLE (FCP-TBL)
- PANIC BUTTON 1 ALARM (PANIC1-A)
- CARBON MONOXIDE ALARM (CO-A)

TYPE	NAME	DESCRIPTION
AI	PIPE1-F	PIPE 1 FLOW
AI	PIPE2-F	PIPE 2 FLOW
AI	NG-F	NATURAL GAS FLOW
AI	CLR1-T	COOLER 1 TEMPERATURE
AI	FZR1-T	FREEZER 1 TEMPERATURE
BI	FCP-A	FIRE CONTROL PANEL ALARM
BI	FCP-TBL	FIRE CONTROL PANEL TROUBLE
BI	PANIC1-A	PANIC BUTTON 1 ALARM
AI	CO-A	CARBON MONOXIDE ALARM

1 M4.3 MISC CONTROLS
NO SCALE

PIPE MOUNTED ITEMS

PIPE1-F
PIPE2-F

WATER METER:
THE CONTROLLER SHALL MONITOR THE WATER METER FOR WATER CONSUMPTION FOR EACH METER ON A CONTINUAL BASIS. VALUES FOR EACH METER SHALL BE MADE AVAILABLE TO THE SYSTEM AT ALL TIMES. ALARM SHALL BE GENERATED AS FOLLOWS:
- METER FAILURE: SENSOR READING INDICATES A LOSS OF PULSE OUTPUT FROM THE WATER METER.

PEAK DEMAND HISTORY:THE CONTROLLER SHALL MONITOR AND RECORD THE PEAK (HIGH AND LOW) DEMAND READINGS FROM EACH WATER METER. PEAK READINGS SHALL BE RECORDED ON A DAILY, MONTH-TO-DATE, AND YEAR-TO-DATE BASIS.

USAGE HISTORY:THE CONTROLLER SHALL MONITOR AND RECORD WATER METER READINGS SO AS TO PROVIDE A WATER CONSUMPTION HISTORY FOR EACH METER. USAGE READINGS SHALL BE RECORDED ON A DAILY, MONTH-TO-DATE, AND YEAR-TO-DATE BASIS.
ALARM:

BOILER MAKE-UP WATER:
CONTROLLER SHALL MONITOR BOILER WATER MAKE AND PROVIDE AN ALARM WHEN MAKE-UP WATER QUANTITY EXCEEDS 100 GALLONS (ADJ.) IN ANY FIVE DAY PERIOD (ADJ.).

HVAC EMERGENCY SHUTOFF:
UPON ACTIVATON OF HVAC EMERGENCY SHUTOFF, ALL RTU'S WILL STOP RUNNING. SUPPLY AIR DAMPERS AND RETURN AIR DAMPERS WILL BOTH BE CLOSED AT THE UNIT. ALARM WILL BE SENT TO BMS INDICATING ACTIVATION OF HVAC EMERGENCY SHUTOFF. UNIT SHALL BE ABLE TO BE RESET BACK TO ORDINARY OPERATING MODE VIA BMS.

PANIC DETECTION

PANIC1-A

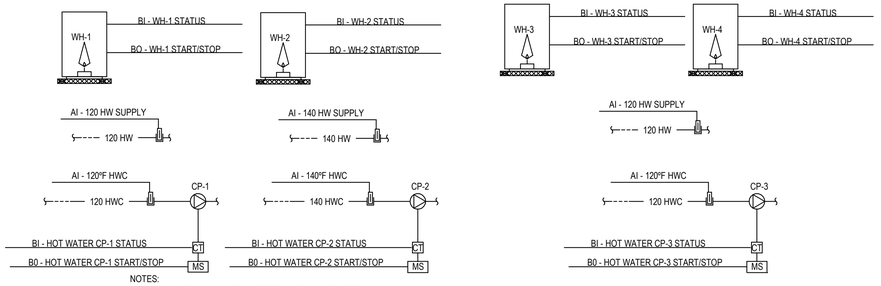

NOTES:
- WH-5/CP-5 AND WH-6/CP-6 CONTROLLED SIMILARLY TO WH-1.
- PROVIDE HW TEMPERATURE SENSORS AS SHOWN ON P4.2.

DOMESTIC HOT WATER CONTROL:
INDIVIDUAL WATER HEATERS (WH-1, -2, -5 & -6) SHALL BE ENABLED ON A USER DEFINABLE SCHEDULE AND SHALL PROVIDE INDICATED TEMEPERATURES. PAIRED WATER HEATERS (WH-3 & -4) SHALL BE ENABLED TO GETHER AND SHALL OPERATE ON INTERNAL CONTROLS TO PROVIDE INDICATED TEMPERATURES.

HOT WATER PUMP CONTROL:
WHEN ENABLED, THE PUMP (CP-X) ASSOCIATED WITH THE WATER HEATER WILL BE STARTED. IF THE PUMP STATUS DOES NOT MATCH THE COMMAND, AN ALARM WILL BE GENERATED AND THE WATER HEATER WILL BE STOPPED. UPON LOSS OF STATUS, THE PUMP WILL RESTART AFTER THE SYSTEM IS MANUALLY RESET. AFTER THE WATER HEATER IS COMMANDED OFF, THE PUMP WILL CONTINUE TO RUN FOR A SHORT TIME TO DISSIPATE THE HEAT.

DOMESTIC HOT WATER CIRCULATING PUMPS SHALL BE COMMANDED TO RUN BASED ON A USER DEFINABLE SCHEDULE (INITIAL SCHEDULE: 7:00 AM - 4:00 PM. VERIFY W/OWNER DURING CX) AND SHALL CYCLE BASED ON DOMESTIC HOT WATER RECIRCULATION TEMPERATURE AS FOLLOWS. ALL TEMPERATURE SETTINGS SHALL BE ADJUSTABLE:

120 °F DOMESTIC HOT WATER (CP-1, -3, -5, -6):
PUMP ON AT 95 °F HWC TEMPERATURE. PUMP OFF AT 120 °F HWC TEMPERATURE.

140 °F DOMESTIC HOT WATER (CP-2):
PUMP ON AT 115 °F HWC TEMPERATURE. PUMP OFF AT 140 °F HWC TEMPERATURE.

ALARMS SHALL BE PROVIDED AS FOLLOWS:
- 120° F SUPPLY TEMP: IF THE SUPPLY TEMPERATURE IS GREATER THAN 125°F (ADJ.).
- 120° F SUPPLY TEMP: IF THE SUPPLY TEMPERATURE IS LESS THAN 90°F (ADJ.).
- 140° F SUPPLY TEMP: IF THE SUPPLY TEMPERATURE IS GREATER THAN 145°F (ADJ.).
- 140° F SUPPLY TEMP: IF THE SUPPLY TEMPERATURE IS LESS THAN 110°F (ADJ.).

ADDITIONAL POINTS MONITORED BY THE FMS:
- WATER HEATERR STATUS
- WATER HEATER ALARM
- WATER HEATER LEAVING WATER TEMPERATURE
- WATER HEATER ENTERING WATER TEMPERATURE

TYPE	NAME	DESCRIPTION
BI	BLR2-A	BOILER 2 ALARM
BO	BLR2-EN	BOILER 2 ENABLE
AI	BLR2EW-T	BOILER 2 ENTERING WATER TEMP.
AI	BLR2LW-T	BOILER 2 LEAVING WATER TEMP.
BI	BLR2-S	BOILER 2 STATUS
BI	BLR3-A	BOILER 3 ALARM
BO	BLR3-EN	BOILER 3 ENABLE
AI	BLR3EW-T	BOILER 3 ENTERING WATER TEMP.
AI	BLR3LW-T	BOILER 3 LEAVING WATER TEMP.
BI	BLR3-S	BOILER 3 STATUS
BI	BLR4-A	BOILER 4 ALARM
BO	BLR4-EN	BOILER 4 ENABLE
AI	BLR4EW-T	BOILER 4 ENTERING WATER TEMP.
AI	BLR4LW-T	BOILER 4 LEAVING WATER TEMP.
BI	BLR4-S	BOILER 4 STATUS
BO	BP1-C	BOILER PUMP 1 COMMAND
BI	BP1-S	BOILER PUMP 1 STATUS

3 M4.3 DOMESTIC HOT WATER SUPPLY CONTROLS
NO SCALE

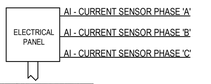

POINT NAME	HARDWARE POINTS AI	AO	BI	BO	SOFTWARE POINTS AV	BV	SCHED	TREND	ALARM	SHOW ON GRAPHIC
PHASE 'A' POWER	X									
PHASE 'B' POWER	X									
PHASE 'C' POWER	X									
kW DEMAND								X		X
kW TODAY								X		X
kW PEAK MONTH-TO-DATE								X		X
kW PEAK YEAR-TO-DATE								X		X
kWh TODAY								X		X
MWh MONTH-TO-DATE								X		X
MWh YEAR-TO-DATE								X		X
SENSOR FAILURE									X	

POWER MONITORING:
THE CONTROLLER SHALL RECIEVE INFORMATION FROM DIV. 26 POWER MONITORING EQUIPMENT. MONITOR ON A CONTINUAL BASIS. THESE VALUES SHALL BE MADE AVAILABLE TO THE SYSTEM AT ALL TIMES. AT THE MAIN ELECTRICAL ROOM F106, CONTROLLER SHALL MONITOR LOADS REFERENCED ON SHEET E5.1 INCLUDING BUT NOT LIMITED TO MECHANICAL EQUIPMENT LOADS, LIGHTING LAODS, STANDBY LOADS, EMERGENCY LIGHTING LOADS, PLUG LOADS.

ALARM SHALL BE GENERATED AS FOLLOWS:
- SENSOR FAILURE: SENSOR READING INDICATES A LOSS OF OUTPUT FROM THE SENSOR.

PEAK DEMAND HISTORY:
THE CONTROLLER SHALL MONITOR AND RECORD THE PEAK (HIGH AND LOW) DEMAND READINGS FROM EACH PANEL PEAK READINGS SHALL BE RECORDED ON A DAILY, MONTH-TO-DATE, AND YEAR-TO-DATE BASIS.

USAGE HISTORY:
THE CONTROLLER SHALL MONITOR AND RECORD ELECTRIC PANEL READINGS SO AS TO PROVIDE A POWER CONSUMPTION HISTORY. USAGE READINGS SHALL BE RECORDED ON A DAILY, MONTH-TO-DATE, AND YEAR-TO-DATE BASIS.

2 M4.3 POWER MONITORING SEQUENCE OF OPERATIONS
SCALE: 12" = 1'-0"

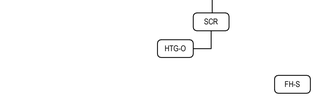

OCCUPIED MODE:
WHEN THE FUME HOOD SWITCH IS ENABLED, VAV SHALL OPEN AND PROVIDE MAXIMUM CFM.
SCR CONTROLS SHALL MAINTAIN DISCHARGE AIR TEMP WITHIN ROOM DEADBAND

DISCHARGE TEMPERATURE SETPOINT:

COOLING: 74° F (ADJ.) PLUS 1°F OFFSET
HEATING: 70° F (ADJ.)" MINUS 1°F OFFSET
DEADBAND = 5°F (MINIMUM DIFFERENCE BETWEEN COOLING AND HEATING SETPOINT)
*WHEN OCCUPANCY SENSOR INDICATES NO OCCUPANCY, SET POINT SHALL BE REDUCED BY 1° F (ADJ.)

ZONE SETPOINT ADJUST:DDC SHALL ADJUST ZONE TEMPERATURE FROM FRONT END. THE OCCUPANT SHALL NOT BE ABLE TO ADJUST THE ZONE TEMPERATURE HEATING AND COOLING SETPOINTS AT THE ZONE SENSOR.

ALARMS:
ALARMS SHALL BE PROVIDED AS FOLLOWS:
FUME HOOD STATUS (FH-S) IS ON, VAV BOX DAMPER (DPR-O) IS CLOSED
FUME HOOD STATUS (FH-S) IS OFF, VAV BOX DAMPER (DPR-O) IS OPEN

TYPE	NAME	DESCRIPTION
AI	DA-VP	DISCHARGE AIR VELOCITY PRESSURE
AI	DA-T	DISCHARGE AIR TEMPERATURE
PAO	DPR-O	SUPPLY AIR DAMPER OUTPUT
PAO	HTG-O	HEATING OUTPUT
MO	OCC-MODE	OCCUPANCY STATUS DISPLAY
BI	FH-S	ZONE SETPOINT

4 M4.3 VAV TERMINAL WITH ELECTRIC COIL
NO SCALE

BID/PERMIT SET

CONDITIONAL USE NUMBER: CU2018-0016
DESIGN REVIEW NUMBER: DR2018-8114
SITE DEVELOPMENT PERMIT NUMBER: TBD
BUILDING PERMIT NUMBER: TBD

REGISTERED PROFESSIONAL ENGINEER
84086PE
DIGITAL SIGNATURE
OREGON
MARCH 9, 2018
CHRISTOPHER NARRAMORE
EXPIRES: 12/31/2020

Digitally signed by Chris Narramore
Date: 2019.03.14 08:53:20 -07'00'

MECHANICAL CONTROLS
ACMA
BEAVERTON SCHOOL DISTRICT

M4.3
74-18109-00
03/14/2019
REVISIONS

DLR Group
Architecture Engineering Planning Interiors

© 2019 DLR Group Architecture & Engineering Inc., an Oregon corporation, ALL RIGHTS RESERVED

C:\Revit\74-18109-00_ACMA_MEP_2018_Central_smargolis.rvt
3/13/2019 10:09:02 PM

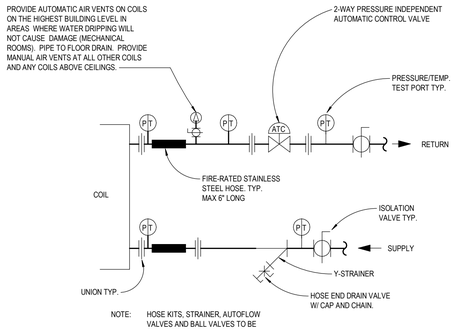

11 M5.1 **2-WAY COIL CONNECTION DETAIL**
NO SCALE

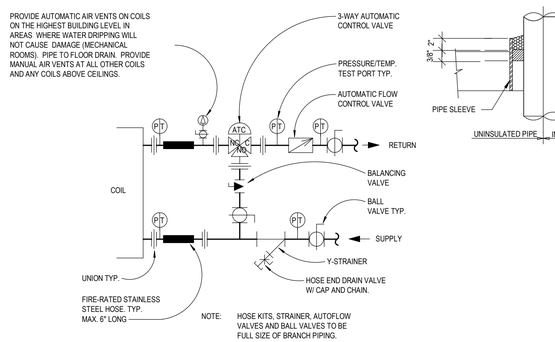

12 M5.1 **3-WAY COIL CONNECTION DETAIL**
NO SCALE

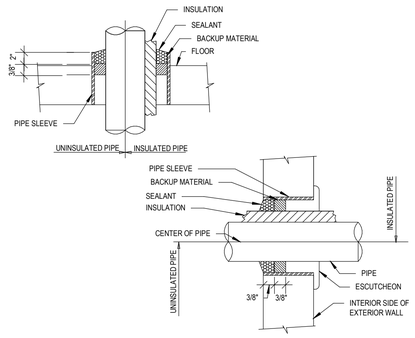

13 M5.1 **PIPE PENETRATIONS DETAIL**
NO SCALE

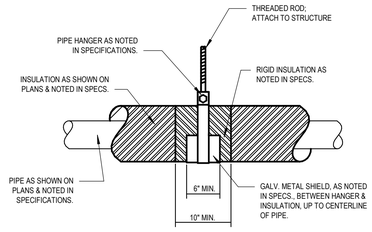

14 M5.1 **INSULATED PIPE HANGER DETAIL**
NO SCALE

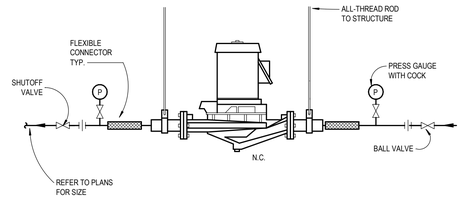

15 M5.1 **INLINE CIRCULATOR PUMP DETAIL**
NO SCALE

REGISTERED PROFESSIONAL ENGINEER
84086PE
DIGITAL SIGNATURE
OREGON
MARCH 9, 2010
CHRISTOPHER NARRAMORE
EXPIRES: 12/31/2020

Digitally signed by Chris Narramore
Date: 2019.03.14 08:53:14-07'00'

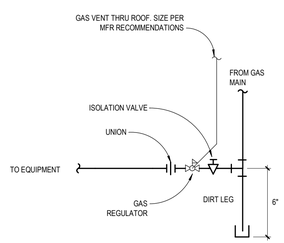

21 M5.1 **GAS CONNECTION DETAIL**
NO SCALE

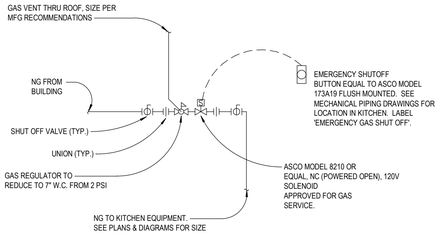

22 M5.1 **KITCHEN GAS SOLENOID VALVE & EMERGENCY SHUTOFF**
NO SCALE

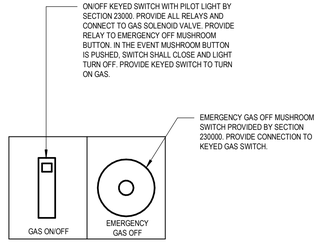

23 M5.1 **SCIENCE ROOM CONTROLS**
NO SCALE

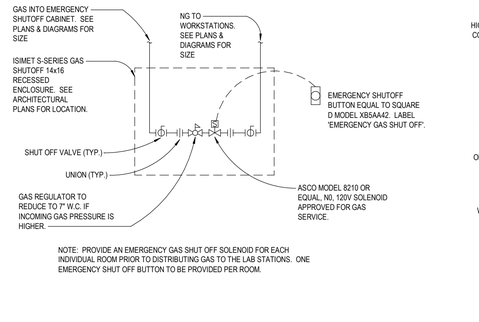

24 M5.1 **GAS SHUTOFF CABINET DETAIL**
NO SCALE

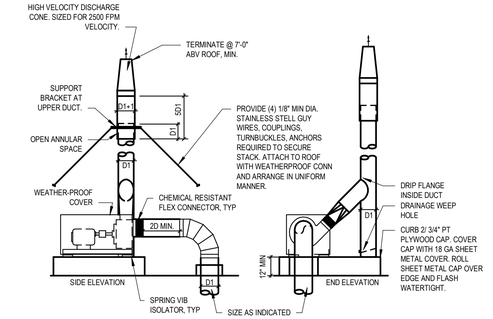

25 M5.1 **FUME HOOD EXHAUST FAN DETAIL**
NO SCALE

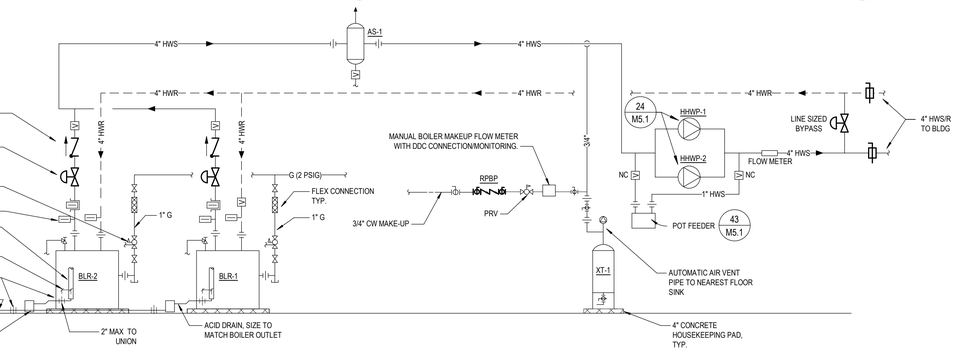

31 M5.1 **HEATING HOT WATER PIPING SCHEMATIC**
NO SCALE

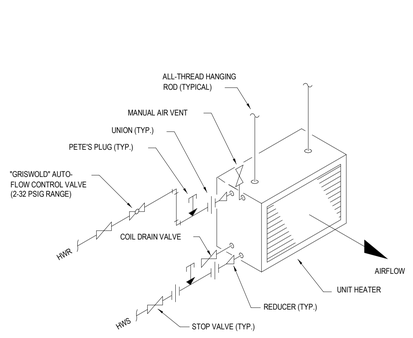

41 M5.1 **UNIT HEATER PIPING DIAGRAM**
NO SCALE

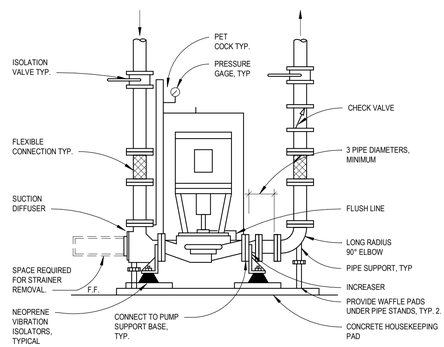

42 M5.1 **VERTICAL INLINE PUMP DETAIL**
NO SCALE

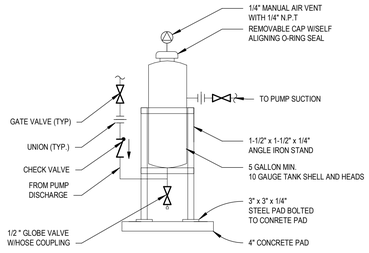

43 M5.1 **POT FEEDER DETAIL**
NO SCALE

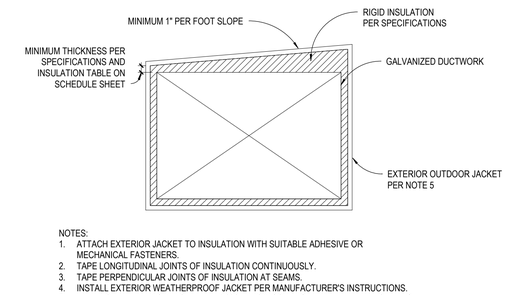

NOTES:
1. ATTACH EXTERIOR JACKET TO INSULATION WITH SUITABLE ADHESIVE OR MECHANICAL FASTENERS.
2. TAPE LONGITUDINAL JOINTS OF INSULATION CONTINUOUSLY.
3. TAPE PERPENDICULAR JOINTS OF INSULATION AT SEAMS.
4. INSTALL EXTERIOR WEATHERPROOF JACKET PER MANUFACTURER'S INSTRUCTIONS.
5. EXTERIOR METAL JACKET SHALL BE 0.032" THICK, CORRUGATED ALUMINUM EQUAL TO INSUL-MATE ALUMINUM JACKETING BY RPR PRODUCTS.

44 M5.1 **EXTERIOR ROOF MOUNTED INSULATED DUCT DETAIL**
NO SCALE

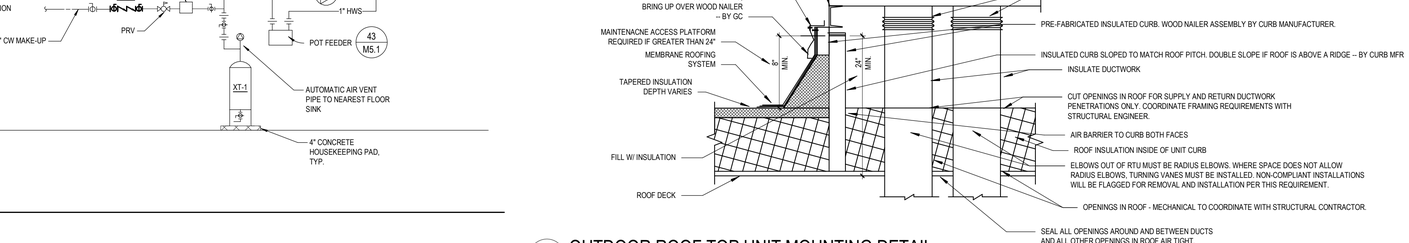

32 M5.1 **OUTDOOR ROOF TOP UNIT MOUNTING DETAIL**
NO SCALE

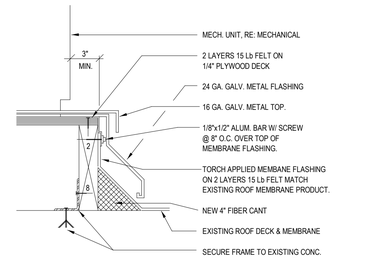

35 M5.1 **CONDENSING UNIT PAD DETAIL (TYP.)**
NO SCALE

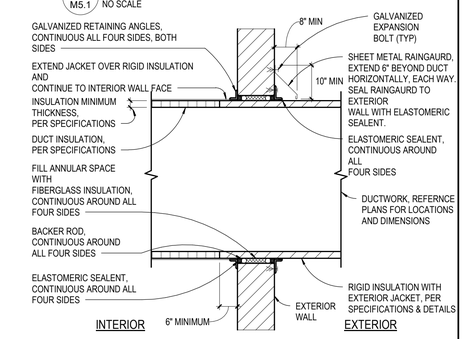

45 M5.1 **DUCT PENETRATION THROUGH EXTERIOR WALL**
NO SCALE

BID/PERMIT SET

CONDITIONAL USE NUMBER: CU2018-0016
DESIGN REVIEW NUMBER: DR2018-0114
SITE DEVELOPMENT PERMIT NUMBER: TBD
BUILDING PERMIT NUMBER: TBD

MECHANICAL DETAILS
ACMA
BEAVERTON SCHOOL DISTRICT

M5.1
74-18109-00
03/14/2019
REVISIONS

DLR Group
Architecture Engineering Planning Interiors

©2019, DLR Group Architecture & Engineering Inc., an Oregon corporation, ALL RIGHTS RESERVED

C:\Revit\74-18109-00_ACMA_MEP_2018_Central_smargolis.rvt
3/13/2019 10:09:06 PM

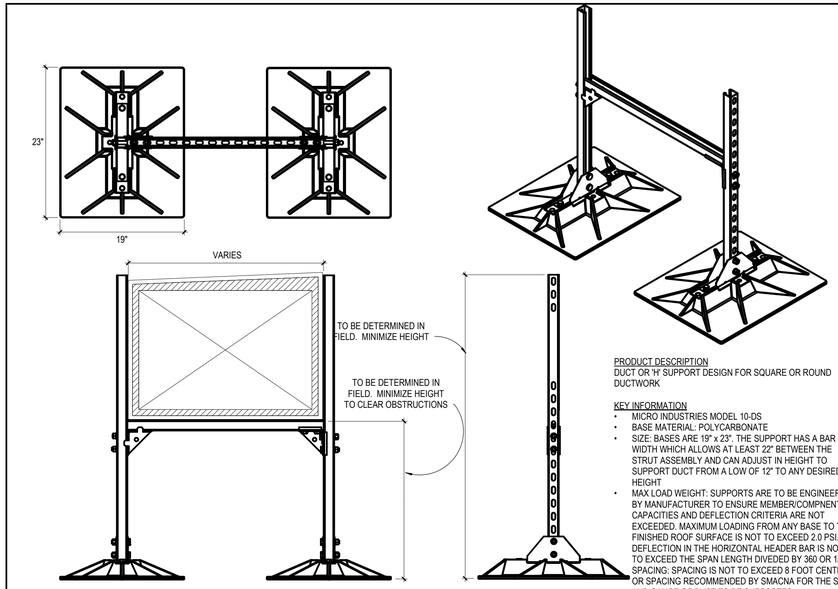

PRODUCT DESCRIPTION
DUCT OR 'H' SUPPORT DESIGN FOR SQUARE OR ROUND DUCTWORK

KEY INFORMATION
- MICRO INDUSTRIES MODEL 10-DS
- BASE MATERIAL: POLYCARBONATE
- SIZE: BASES ARE 19" x 23". THE SUPPORT HAS A BAR WIDTH WHICH ALLOWS AT LEAST 22" BETWEEN THE STRUT ASSEMBLY AND CAN ADJUST IN HEIGHT TO SUPPORT DUCT FROM A LOW OF 12" TO ANY DESIRED HEIGHT
- MAX LOAD WEIGHT: SUPPORTS ARE TO BE ENGINEERED BY MANUFACTURER TO ENSURE MEMBER/COMPNENT CAPACITIES AND DEFLECTION CRITERIA ARE NOT EXCEEDED. MAXIMUM LOADING FROM ANY BASE TO THE FINISHED ROOF SURFACE IS NOT TO EXCEED 2.0 PSI. DEFLECTION IN THE HORIZONTAL HEADER BAR IS NOT TO EXCEED THE SPAN LENGTH DIVEDED BY 360 OR 1/8". SPACING: SPACING IS NOT TO EXCEED 8 FOOT CENTERS OR SPACING RECOMMENDED BY SMACNA FOR THE SIZE AND GAUGE OF DUCT TO BE SUPPORTED.

11 EXTERIOR ROOF DUCT SUPPORTS DETAIL
M5.2 NO SCALE

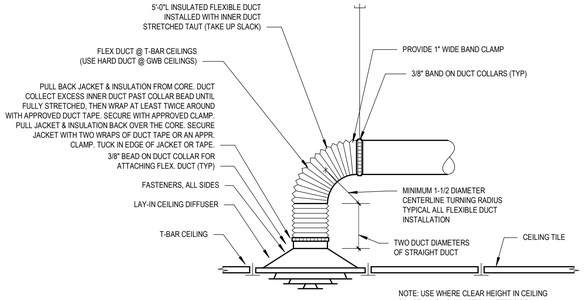

NOTE: USE WHERE CLEAR HEIGHT IN CEILING SPACE ALLOWS 2-DUCT DIAMETERS OF STRAIGHT VERTICAL DUCT.

12 CEILING SUPPLY DIFFUSER CONNECTION DETAIL
M5.2 NO SCALE

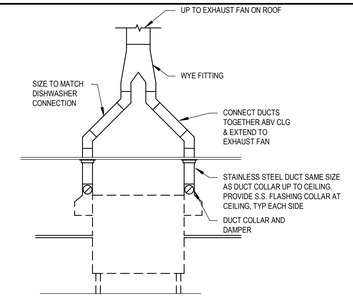

NOTES:
1. DUCTS SHALL BE WATER-TIGHT.
2. DUCTS SHALL BE STAINLESS STEEL DUCTS.
3. PITCH DUCTS DOWN TOWARD INTAKE OPENINGS OR PROVIDE DRAIN AT ANY POINT WHERE WATER WILL COLLECT.
4. SEE FLOOR PLANS FOR DUCT SIZES.

13 DISHWASHER EXHAUST DETAIL
M5.2 NO SCALE

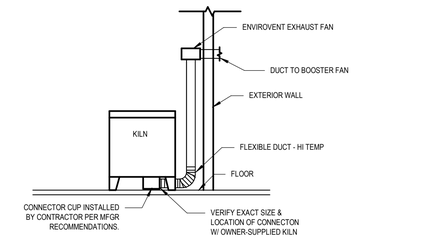

NOTE:
PROVIDE ALL CLAMPS, BRACKETS AND TRANSITION DUCTWORK FOR PROPER AND COMPLETE INSTALLATION. INSTALL PER MANUFACTURER'S REQUIREMENTS AND RECOMMENDATIONS.

14 KILN EXHAUST HOOD DETAIL
M5.2 NO SCALE

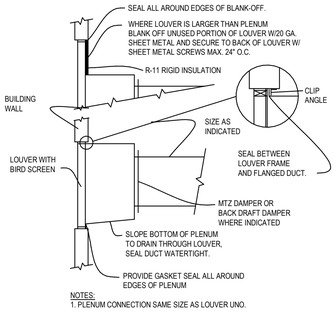

NOTES:
1. PLENUM CONNECTION SAME SIZE AS LOUVER UNO.

23 LOUVER PLENUM DETAIL
M5.2 NO SCALE TYPICAL ALL DUCTED LOUVER LOCATIONS

NOTES:
1. CURB & ROOF OPENING EXACT DIMENSIONS SHALL BE DETERMINED BY FAN MFR. COORDINATE WITH STRUCTURAL REQUIREMENTS.
2. MOUNT TOP OF CURB LEVEL. VERIFY ROOF SLOPE & FABRICATE CURB ACCORDINGLY.
3. HINGED ROOF CURBS AND ELECTRICAL CONNECTIONS FOR ALL EXHAUST FANS WITH LOCKING HASP & CABLES.

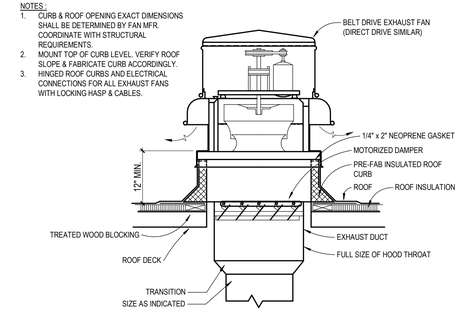

24 CENTRIFUGAL TYPE ROOF EXHAUSTER DETAIL
M5.2 NO SCALE

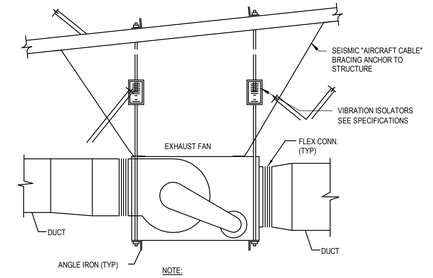

NOTE:
1. STRUCTURE MAY VARY
2. PROVIDE CLEARANCE FOR MOTOR ACCESS AND FAN MAINTENANCE
3. FAN MAY VARY IN SIZE AND STYLE

25 IN-LINE FAN INSTALLATION DETAIL
M5.2 NO SCALE

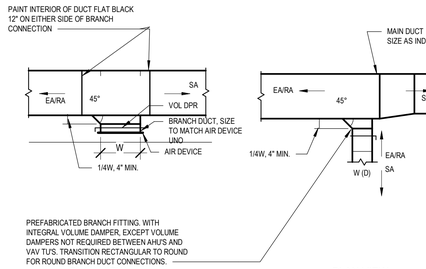

PLAN VIEW
DUCT MOUNTED AIR DEVICE

PLAN VIEW
BRANCH DUCT TAKE-OFF

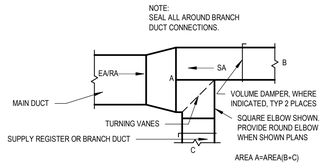

PLAN VIEW
AIR SPLIT TYPE DUCT TAKE-OFF

31 DUCT TAKE-OFF DETAILS
M5.2 NO SCALE

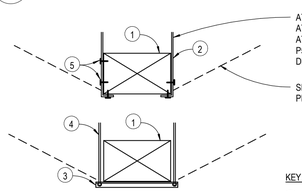

KEY NOTES:
1. DUCT
2. SHEET METAL STRAP 1" WIDE OF SAME METAL GAUGE AS DUCT.
3. STEEL ANGLE, NOT LESS THAN 1"x1"x1/8" SIZED TO MATCH DUCT.
4. ALL THREAD HANGER ROD WITH ROD STIFFENER AND PIPE HANGER.
5. SELF TAPPING CADMIUM PLATED HEX HEADED SHEET METAL SCREW. STRAPS TO BE TIGHT AGAINST DUCT.

HANGER SIZED FOR RECTANGULAR DUCT			
MAX. LENGTH ANY SIDE	HANGER	HORIZONTAL SUPPORT ANGLE	MAXIMUM SPACING
30"	2"x18 GA. STRAP	NONE REQUIRED	10'-0"
36"	1/4" ROUND ROD	1-1/2"x1-1/2"x1/8"	8'-0"
48"	1/4" ROUND ROD	2"x2"x1/8"	8'-0"
60"	5/16" ROUND ROD	2"x2"x1/8"	8'-0"
84"	3/8" ROUND ROD	2"x2"x1/8"	8'-0"

41 DUCT HANGING - SEISMIC
M5.2 NO SCALE

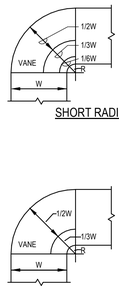

R SHALL EQUAL OR BE GREATER THAN 1/6W.

SHORT RADIUS ELBOW WITH TWO VANES

R SHALL EQUAL OR BE GREATER THAN 1/3W.

SHORT RADIUS ELBOW WITH ONE VANES

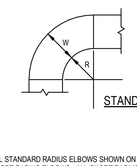

R SHALL EQUAL OR BE GREATER THAN W.

STANDARD RADIUS ELBOW

NOTES:
1. ALL STANDARD RADIUS ELBOWS SHOWN ON PLANS MAY BE MADE SHORT RADIUS ELBOWS. ALL SHORT RADIUS ELBOWS SHALL HAVE VANES. VANES SHALL BE CONSTRUCTED, SUPPORTED AND FASTENED AS RECOMMENDED BY SMACNA.

32 RADIUS ELBOW DETAILS
M5.2 NO SCALE

NOTE:
1. PROVIDE MINIMUM OF 36 IN. CLEARANCE IN FRONT OF ALL ELECTRICAL CONTROLLERS/PANELS.
2. PROVIDE BOTTOM ACCESS PANEL TO TERMINAL UNIT.
3. REFERENCE DETAILS 11 & 12 ON M5.1, FOR PIPING CONNECTIONS.

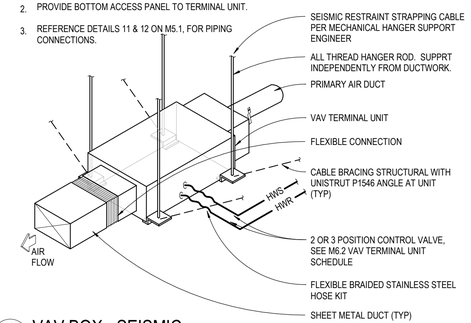

42 VAV BOX - SEISMIC
M5.2 NO SCALE

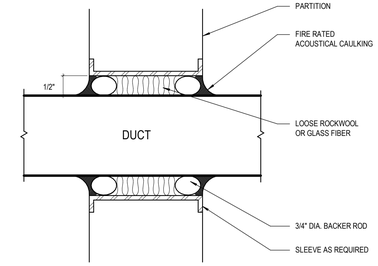

NOTE:
THIS DETAIL APPLIES TO ALL DUCTS PENETRATING WALLS, FLOOR OR CEILING OF ANY SPACE.

33 WALL DUCT PENETRATION DETAIL
M5.2 NO SCALE

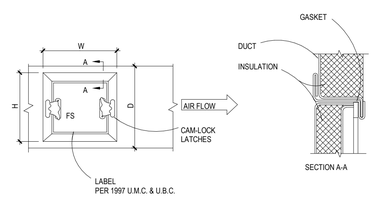

ACCESS PANEL SIZE SCHEDULE	
DEPTH "D"	ACCESS PANEL SIZE
6" TO 15"	10"W X (D-2)"H
15" TO 21"	12"W X (D-2")H
21" OR MORE	18"W X (D-2")H

ALL OTHER ACCESS PANELS ARE TO BE A MINIMUM OF 15" X 15" WHERE DUCT SIZE ALLOWS. USE 4 CAM LATCHES ON PANELS LARGER THAN 18" X 18".

43 ACCESS PANEL DETAIL
M5.2 NO SCALE

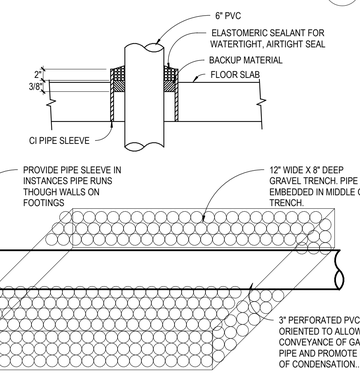

44 RADON PIPING DETAIL
M5.2 NO SCALE

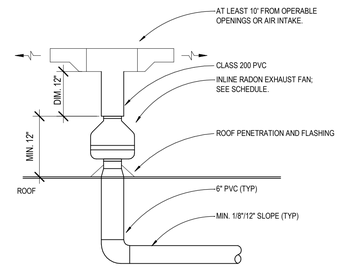

45 RADON FAN DETAIL
M5.2 NO SCALE

BID/PERMIT SET

CONDITIONAL USE NUMBER: CU2018-0016
DESIGN REVIEW NUMBER: DR2018-8114
SITE DEVELOPMENT PERMIT NUMBER: TBD
BUILDING PERMIT NUMBER: TBD

REGISTERED PROFESSIONAL ENGINEER
84086PE
DIGITAL SIGNATURE
OREGON
MARCH 9, 2010
CHRISTOPHER NARRAMORE
EXPIRES: 12/31/2020

Digitally signed by Chris Narramore
Date: 2019.03.14 08:53:26-07'00'

MECHANICAL DETAILS
ACMA
BEAVERTON SCHOOL DISTRICT

M5.2
74-18109-00
03/14/2019
REVISIONS

DLR Group
Architecture Engineering Planning Interiors

© 2019, DLR Group Architecture & Engineering Inc., an Oregon corporation, ALL RIGHTS RESERVED

C:\Revit\74-18109-00_ACMA_MEP_2018_Central_smargolis.rvt
3/13/2019 10:09:11 PM

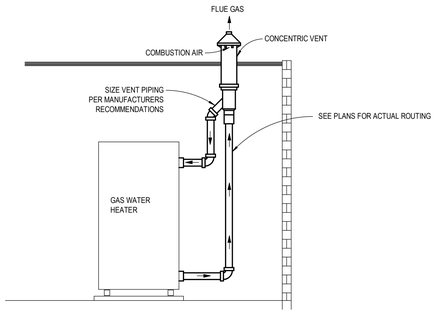

11 M5.3 SEALED DIRECT VENT WITH CONCENTRIC VENT VERTICAL TERMINATION DETAIL

NO SCALE

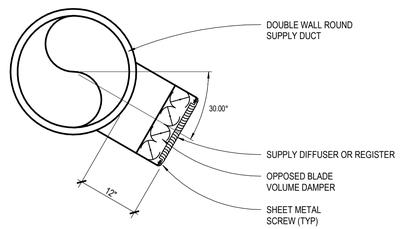

12 M5.3 DIFFUSER/REGISTER ROUND DUCT CONNECTION

SCALE: 3/8" = 1'-0"

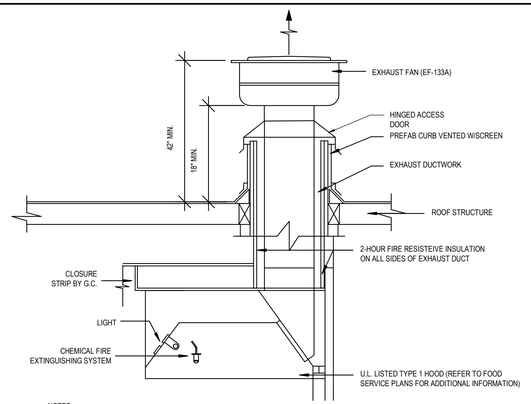

NOTES:

1. KITCHEN HOOD SUPPLIER TO PROVIDE SHOP DRAWINGS. TYPE 1 HOOD AND EXHAUST MUST MEET REQUIREMENTS OF 2014 OREGON ENERGY CODE. HOOD MUST BE EXTENDED A MIN. 6" ON ALL OPEN SIDES OF COOKING SURFACE. SUPPORT HOOD FROM STRUCTURE PER MANUFACTURER'S RECOMMENDATIONS.

13 M5.3 KITCHEN EXHAUST HOOD

SCALE: 1/2" = 1'-0"

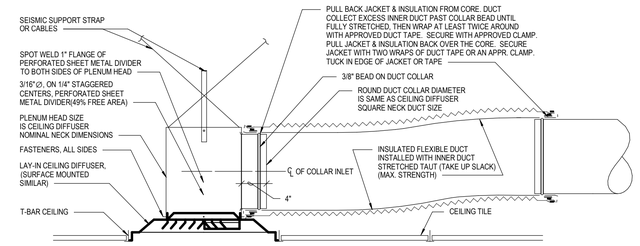

NOTE: USE WHERE CLEAR HEIGHT IN CEILING SPACE DOES NOT ALLOW STRAIGHT VERTICAL DUCT.

14 M5.3 RESTRICTED CEILING SUPPLY DIFFUSER PLENUM HEAD CONNECTION

SCALE: 12" = 1'-0"

21 M5.3 CONDENSATE DRAIN CONNECTION DETAIL

NO SCALE

22 M5.3 SEALED DIRECT VENT WITH SEPARATE TERMINATION

NO SCALE

BID/PERMIT SET

CONDITIONAL USE NUMBER: CU2018-0016
DESIGN REVIEW NUMBER: DR2018-0114
SITE DEVELOPMENT PERMIT NUMBER: TBD
BUILDING PERMIT NUMBER: TBD

REGISTERED PROFESSIONAL ENGINEER
84086PE
DIGITAL SIGNATURE
OREGON
MARCH 9, 2018
CHRISTOPHER NARRAMORE

EXPIRES: 12/31/2020

Digitally signed by Chris Narramore
Date: 2019.03.14 08:53:36-07'00'

MECHANICAL DETAILS

ACMA

BEAVERTON SCHOOL DISTRICT

M5.3
74-18109-00
03/14/2019
REVISIONS

DLR Group
Architecture Engineering Planning Interiors

©2019, DLR Group Architecture & Engineering Inc., an Oregon corporation, ALL RIGHTS RESERVED

C:\Revit\74-18109-00_ACMA_MEP_2018_Central_smargolis.rvt
3/13/2019 10:09:13 PM

.ROOF TOP UNIT SCHEDULE.

MARK	SERVES	SUPPLY FAN DATA							EXHAUST FAN DATA					DX COOLING COIL					GAS HEATING			MIN AFUE %	CONDENSER DATA		COMPRESSOR DATA				UNIT DATA						BASIS OF DESIGN (DAIKIN)	NOTES	MARK
		MAX SUPPLY (CFM)	MIN SUPPLY (CFM)	LOWER LIMIT OA (CFM)	E.S.P (IN WC)	TOTAL S.P. (IN W.G.)	BHP (HP)	MOTOR (HP)	CFM	E.S.P (IN WC)	RPM	QTY.	MOTOR HP	AIR FLOW (CFM)	EAT DB/WB (°F)	LAT DB/WB (°F)	TOTAL CAPACITY (MBH)	SENSIBLE CAPACITY (MBH)	AIR FLOW (CFM)	EAT (°F)	CAPACITY (MBH)		QTY.	FLA	QTY.	AMPS	REFRIGERANT	EER	DIM LxHxW (IN)	WEIGHT (LBS)	VOLTAGE	PHASE	FLA	MCA			
RTU-1	1ST FLOOR SE, ADMIN AND FILM	7045	6020	2240	2.00	2.90	4.91	7.5	6545	1.00	1394	1	8	7045	81.3 / 65.9	54.1 / 54	255.8	209.9	6020	50	240	80	1	3.5	1	30.1	R410A	11.1	162.3" x 70.5" x 76.5"	3998	460	3	49.4	56.9	DPS020A	2	RTU-1
RTU-2	1ST FLOOR SW, MUSIC, LIBRARY, COMPUTER LAB	10725	9385	4505	2.00	2.42	5.8	10	10000	1.00		3	1	10725	83.4 / 66.6	53.6 / 52.5	451.4	349.3	9384	46	320	80	4	2.0	4	22.9/18.6/13.1/13.1	R410A	10.1	245.5" x 73.2" x 97.5"	5326	460	3	95.6	101.4	MPS040F	1	RTU-2
RTU-3	COMMONS	7615	5675	3300	2.00	3.02	5.51	7.5	7615	1.00	2009	1	4	7615	83.7 / 65.6	52.8 / 52.6	293.2	257.2	5675	42	240	80	2	3.5	2	22.9/18.6	R410A	11	162.3" x 70.5" x 76.5"	4108	460	3	62.7	68.4	DPS025A	2	RTU-3
RTU-4	1ST FLOOR N, SCIENCE, DESIGN, ART	10175	10175	5140	2.00	2.38	5.4	10	10000	1.00	1003	3		10175	85.1 / 66.6	53 / 51.8	448.2	361.1	8840	40	320	80	4	2.0	4	22.9/18.6/13.1/13.1	R410A	10.1	245.5" x 73.2" x 97.5"	5326	460	3	95.6	101.4	MPS040F	1	RTU-4
RTU-5	2ND FLOOR SW CLASSROOMS	7360	6340	3300	2.00	3.00	5.24	7.5	6860	1.00	1849	2	4	7360	83.1 / 65.9	52.7 / 52.6	292.9	244.8	6340	47	240	80	1	3.5	2	22.9/18.6	R410A	11	162.3" x 70.5" x 76.5"	4108	460	3	62.7	68.4	DPS025A	2	RTU-5
RTU-6	2ND FLOOR SE CLASSROOMS	5880	4705	2295	2.00	2.70	3.84	7.5	5880	1.00	1283	1	4	5880	82.8 / 65.2	51.0 / 51.0	244.8	204.3	4635	46	240	80	1	3.5	1	32.5	R410A	11.1	162.3" x 70.5" x 76.5"	3848	460	3	48.6	56.1	DPS020A	2	RTU-6
RTU-7	2ND FLOOR DANCE	6895	3165	2660	2.00	3.23	5.33	7.5	6895	1.00	1856	2	4	6895	82.7 / 68.7	54.9 / 54.8	303.3	209.9	3165	30	240	80	1	3.5	2	22.9/18.6	R410A	11	162.3" x 70.5" x 76.5"	4108	460	3	62.7	68.4	DPS025A	2,3	RTU-7
RTU-8	2ND FLOOR N CLASSROOMS	9610	8460	3845	2.00	2.35	5	10	8460	1.00				9610	83 / 65.9	51.3 / 50.2	435.8	332.8	8460	47	320	80	4	2.0	4	22.9/18.6/13.1/13.1	R410A	10.1	245.5" x 73.2" x 97.5"	5176	460	3	89.6	95.4	MPS040F	1	RTU-8
RTU-9	KITCHEN	1860	1488	900	1.00	1.71	0.88	4	1800	0.50	1957	1	1.3	1860	78.2 / 63	52.5 / 52.3	57.2	52.4	1488	45	64	80	1	0.9	1	5.4	R410A	12.8	67" x 40.8" x 87"	1487	460	3	11.7	13.0	DPS005A		RTU-9

.ROOF TOP UNIT SCHEDULE. RAMP DEDUCTIVE ALTERNATE

MARK	SERVES	SUPPLY FAN DATA							EXHAUST FAN DATA					DX COOLING COIL					GAS HEATING			MIN AFUE %	CONDENSER DATA		COMPRESSOR DATA				UNIT DATA						BASIS OF DESIGN (DAIKIN)	NOTES	MARK
		MAX SUPPLY (CFM)	MIN SUPPLY (CFM)	LOWER LIMIT OA (CFM)	E.S.P (IN WC)	TOTAL S.P. (IN W.G.)	BHP (HP)	MOTOR (HP)	CFM	E.S.P (IN WC)	RPM	QTY.	MOTOR HP	AIR FLOW (CFM)	EAT DB/WB (°F)	LAT DB/WB (°F)	TOTAL CAPACITY (MBH)	SENSIBLE CAPACITY (MBH)	AIR FLOW (CFM)	EAT (°F)	CAPACITY (MBH)		QTY.	FLA	QTY.	AMPS	REFRIGERANT	EER	DIM LxHxW (IN)	WEIGHT (LBS)	VOLTAGE	PHASE	FLA	MCA			
RTU-2 ALTERNATE	1ST FLOOR SW, MUSIC, LIBRARY, COMPUTER LAB	9635	8170	4105	2.00	2.86	7.1	7.5	9000	0.50		2	1	9635	83.5 / 65.5	53.8 / 52.8	362.6	312.8	8170	49	300	80	3	2.0	3	22.9/18.6/13.1	R410A	10.1	205.2" x 55.5" x 97.5"	4256	460	3	75.2	81.0	MPS035F	1	RTU-2 ALTERNATE

GENERAL NOTES (APPLICABLE ALL UNITS):
- REVIEW MANUFACTURER'S RIGGING AND LIFTING INSTRUCTIONS PRIOR TO INSTALLATION.
- MINIMUM COOLING EFFICIENCIES BASED ON AHRI 340/360
- ALL UNITS TO BE PROVIDED WITH VIBRATION ISOLATION/SEISMIC CURB TO MATCH UNIT, 24" HIGH MINIMUM.
- ALL STARTERS TO BE PROVIDED AS PART OF DIVISION 23 WORK.
- PROVIDE FACTORY MOUNTED DISCONNECTS.
- ALL UNITS SHALL MEET THE REQUIREMENTS OF THE 2014 OREGON ENERGY EFFICIENCY CODE, TABLE 503.2.3.
- CONTRACTOR SHALL BE RESPONSIBLE FOR ALL POWER AND CONTROL WIRING, INCLUDING CONDUIT TO PROVIDE A FULLY FUNCTIONAL SYSTEM.
- PROVIDE MICROTECH III WITH BACNET PROVIDED AS PART OF CONTROLS CONTRACTOR WORK.
- EBTRON OSA MEASUREMENT FACTORY INSTALLED AND WIRED.
- INSTALL SMOKE DETECTORS IN RETURN AIR DUCTWORK. DETECTORS FURNISHED UNDER DIV. 28 BUT INSTALLED BY DIV. 23.
- PROVIDE 65000 AMP SHORT CIRCUIT CURRENT RATING FOR ELECTRICAL CONNECTION FOR ALL RTUS

NOTES
1. VFD ON SUPPLY FANS; EC MOTORS ON RETURN FANS.
2. EC MOTORS ON ALL FANS.
3. UNIT CONFIGURED FOR SIDE INLET/OUTLET SUPPLY AND RETURN CONNECTIONS, SEE M1.4.

.HYDRONIC UNIT HEATER SCHEDULE.

MARK	AREA SERVED	CFM	HEATING COIL					CONTROL VALVE	BRANCH LINE SIZE (IN)	ELECTRICAL			DIMS (IN) (WxDxH)	WEIGHT (LBS)	BASIS OF DESIGN	NOTES
			CAPACITY (MBH)	EWT (°F)	EAT (°F)	FLUID FLOW (GPM)	ROWS			FLA	V	PH				
CUH-100	ENTRY VESTIBULE 100	650	41.9	125	60	5.1	4	2-WAY	1 1/4"	2.1	115	1	62X25X10	135.00	MODINE-FC-06-006	
CUH-130	EAST VESTIBULE 130	330	9.3	125	60	2.3	1	2-WAY	1 1/4"	1.7	115	1	44X25X10	100.00	MODINE-FC-06-003	
UH-100	MECHANICAL M100	100	3.0	125	60	1.3	1	2-WAY	1 1/4"	0.8	115	1	13X13X6	16.00	QMARK MUH03-81	

.CEILING FAN SCHEDULE.

MARK	AREA SERVED	# AIR FOILS	RPM	DIAMETER (FT)	WEIGHT (LBS)	HP (WATTS)	V	PH	RATED CURRENT	CIRCUIT SIZE (AMPS)	MAX SOUND dBa	BASIS OF DESIGN (BIG ASS SOLUTIONS)	NOTES
CF-1	COMMONS NORTH 141	8	76	12'	88	350	240	3	2.7	10	<35	ESSENCE 12 FT	1-7
CF-2	COMMONS NORTH 141	8	76	12'	88	350	240	3	2.7	10	<35	ESSENCE 12 FT	1-7

NOTES:
1. VERIFY EXTENSION TUBE LENGTH AND MOUNTING BRACKET WITH MANUFACTURER PRIOR TO ORDERING.
2. BOTTOM OF FANS SHALL BE AT LEAST 16' AFF.
3. FANS SHALL BE AT LEAST 2' AWAY, IN ALL DIRECTIONS, FROM POSSIBLE OBSTRUCTIONS.
4. FANS SHALL NOT BE MOUNTED WITHIN TWO TIMES THE FAN DIAMETER OF EXHAUST OR RETURN AIR INTAKES, AND SHALL NOT BE IN DIRECT LINE OF DISCHARGE OF HVAC EQUIPMENT.
5. EXTENSION TUBES 4' OR LONGER SHALL BE INSTALLED WITH GUY WIRES PER THE MANUFACTURER'S INSTALLATION REQUIREMENTS.
6. FANS SHALL BE AT LEAST TWO AND ONE-HALF TIMES THE DIAMETER OF THE LARGEST FAN AWAY FROM NEIGHBORING FANS.
7. PROVIDE FANS WITH INTERFACE TO BE COMPATIBLE WITH BUILDING CONTORLS SYSTEM (BACNET).

.AIR/DIRT COALESCING SEPARATOR SCHEDULE.

Mark No.	SERVES	MAX WPD	SYSTEM GPM	SIZE	BASIS OF DESIGN (SPIROTHERM)	NOTES
AS-1	BLR-1 & 2	10 FT	145 GPM	4"ø-4"ø	VDN-400 FA	SEE BELOW

NOTES:
1. REMOVEABLE HEAD, AUTOMATIC AIR VENT

.BOILER SCHEDULE.

MARK	SERVES	INPUT (MBH)	OUTPUT (MBH)	ELECTRICAL DATA			FLOW RATE (GPM)	Cv GPM @ 1 PSID	EWT (°F)	WATER VOLUME (GAL)	FLUE SIZE (IN)	GAS		UNIT DIMENSIONS LxWxH	OPERATING WEIGHT (LBS)	BASIS OF DESIGN (ADVANCED THERMAL HYDRONICS)	NOTES
				BURNER								MAX PRESSURE (IN W.C.)	LINE SIZE (DIA IN)				
				V	PH	FLA (AMPS)											
BLR-1	HEATING HOT WATER SYSTEM	1000	927	120	1	6.6	90	100	120	14.0	4"	14.00	1 1/4"	52"x34"x74"	1400	KN-10	SEE BELOW
BLR-2	HEATING HOT WATER SYSTEM	1000	927	120	1	6.6	90	100	120	14.0	4"	14.00	1 1/4"	52"x34"x74"	1400	KN-10	SEE BELOW

NOTES:
1. BOILER CONTROL PANEL & BMS INTERFACE PANEL CAPABLE OF INTERFACING WITH EMCS AND CONTROL BOILERS IN A LEAD/LAG SEQUENCE.
2. ACID NEUTRALIZATION KIT.
3. CATEGORY IV VENTING.
4. 10:1 TURNDOWN.
5. CSD-1 SCAQMD RULE 1146.2 FOR LOW NOX.
6. 50 PSI RELIEF VALVE.

.EXPANSION TANK SCHEDULE.

MARK	SERVES	ESTIMATED SYS. VOL. (GAL)	TEMP RANGE (°F)		PRESSURE RANGE (PSIG)		MIN TANK VOLUME (GAL)	MIN ACCEPTANCE VOLUME (GAL)	BASIS OF DESIGN (TACO)	NOTES
			MAX	MIN	MAX	MIN				
XT-1	HYDRONIC BOILERS	900	140	40	60	20	34.0	19.0	CBX130-125	SEE BELOW

NOTES:
1. TANK SHALL BE ASME RATED.
2. 150 PSI WORKING PRESSURE.

.PUMP SCHEDULE.

MARK	SERVES	TYPE	GPM	HEAD (FT)	RPM	EFFICIENCY (%)	MOTOR HP	V/Ph/Hz	FLA (AMPS)	BASIS OF DESIGN (BELL & GOSSETT)	NOTES
HHWP-1	HEATING HOTWATER SYSTEM	INLINE	180	65	1800	64.3	7.5	480/60/3	9.2	E-80-2.5X2.5X9.5C	1,2,3,4,5
HHWP-2	HEATING HOTWATER SYSTEM	INLINE	180	65	1800	64.3	7.5	480/60/3	9.2	E-80-2.5X2.5X9.5C	1,2,3,4,5

NOTES
1. VFD FURNISHED BY DIVISION 23 AND INSTALLED BY DIVISION 26.
2. SUCTION DIFFUSER
3. VERTICAL IN-LINE SPLIT COUPLED, MOUNTING BASE
4. NON-OVERLOADING MOTOR HP. PREMIUM EFFICIENCY MOTOR. SHAFT GROUNDING RING.
5. SYSTEM CURVE SHALL PASS THROUGH IMPELLER CURVE OF SINGLE OPERATING PUMP.

.FAN SCHEDULE.

MARK	SERVES	LOCATION	FAN TYPE	WHEEL TYPE	AIR FLOW (CFM)	EXTERNAL S.P. (IN WG)	FAN RPM	SOUND (SONES)	MOTORIZED DAMPER	CONTROL	WEIGHT (LBS)	DRIVE TYPE	FAN HP	V	Phase	BASIS OF DESIGN (LOREN COOK)	NOTES
EF-00RR	SOUTH RESTROOM EXHAUST	ROOF	DOWNBLAST	FORWARD	1120	0.50	1339	9.3	Yes	SCHEDULE	21	DIRECT	1/4	115	1	120C15D	1,2,6
EF-00WC	SOUTH WATER CLOSET EXHAUST	ROOF	DOWNBLAST	FORWARD	100	0.50	1350	4.8	Yes	SCHEDULE	13	DIRECT	1/6	115	1	90C17DEC	1,2,6
EF-01RR	NORTH RESTROOM EXHAUST	ROOF	DOWNBLAST	FORWARD	1360	0.50	1160	9.1	Yes	SCHEDULE	22	DIRECT	1/2	115	1	135C15D	1,2,6
EF-100	SOUTH WC, HEALTH, CUSTODIAL EXHAUST	ROOF	DOWNBLAST	FORWARD	375	0.50	1358	8.6	Yes	SCHEDULE	15	DIRECT	1/8	115	1	100C15DH	1,2,6
EF-133A	KITCHEN HOOD EXHAUST	LOWER ROOF	UPBLAST	FORWARD	1845	2.00	1743	17.9	Yes	SEE CONTROLS	128	BELT	1 1/2	115	1	195VX8B VCR-XP	1,2,3,6
EF-133B	KITCHEN WAREWASHER WEST	LOWER ROOF	DOWNBLAST	FORWARD	600	1.00	1301	8.1	Yes	SEE CONTROLS	71	DIRECT	1/2	115	1	150RH17DEC	1,2,6
EF-145	SCIENCE LAB 145 GENERAL EXHAUST	ROOF	DOWNBLAST	FORWARD	1220	0.50	906	6.4	Yes	SCHEDULE	29	DIRECT	3/4	115	1	150C13D	1,2,6
EF-147	SCIENCE LAB 147 GENERAL EXHAUST	ROOF	DOWNBLAST	FORWARD	1220	0.50	906	6.4	Yes	SCHEDULE	29	DIRECT	3/4	115	1	150C13D	1,2,6
EF-147A	SCIENCE LAB 147 FUME HOOD EXHAUST	ROOF	UTILITY SET	FORWARD	740	0.50		18	Yes	HOOD SWITCH	69	DIRECT	1/4	115	1	(GREENHECK) SWD-10-VG	
EF-149A	CHEMICAL STORAGE 149A	149A	UTILITY SET	FORWARD	80	0.24	930	10	No	CONTINUOUS	221	BELT	1/3	115	1	60 CPV	1,2,7
EF-203	DARKROOM FUME HOOD	ROOF	DOWNBLAST	FORWARD	375	0.50	1358	8.6	Yes	HOOD SWITCH	15	DIRECT	1/8	115	1	100C15DH	1,2,6
EF-E101	ELECTRICAL ROOM	LOWER ROOF	DOWNBLAST	FORWARD	680	0.50	1100	5.9	Yes	THERMOSTATIC	21	DIRECT	1/4	115	1	120C13D	1,2,6
EF-E101A	EMERGENCY ELECTRICAL ROOM	LOWER ROOF	DOWNBLAST	FORWARD	445	0.50	1378	7.4	Yes	THERMOSTATIC	17	DIRECT	1/8	115	1	101C15D	1,2,6
EF-E200	ELECTRICAL ROOM E200	ROOF	DOWNBLAST	FORWARD	200	0.50	1450	5.1	Yes	THERMOSTATIC	14	DIRECT	1/8	115	1	90C15DL	1,2,6
EF-KILN-1A	KILN #1 VENT FAN	136A	INLINE	FORWARD	140	0.50		4	Yes	IN-LINE POWER	17	DIRECT	1/3	115	1	(SKUTT) ENVIROVENT-2	1,2,8
EF-KILN-1B	KILN #1 BOOSTER VENT FAN	149A	INLINE	FORWARD	140	0.38	1039	6.3	Yes	INTERCONNECT	44	DIRECT	1/6	115	1	SQI-HP	1,2,8
EF-KILN-2A	KILN #2 VENT FAN	136A	INLINE	FORWARD	140	0.50		4	Yes	IN-LINE POWER	17	DIRECT	1/3	115	1	(SKUTT) ENVIROVENT-2	1,2,8
EF-KILN-2B	KILN #2 BOOSTER VENT FAN	149A	INLINE	FORWARD	140	0.38	1039	6.3	Yes	INTERCONNECT	44	DIRECT	1/6	115	1	SQI-HP	1,2,8
EF-KILN-3A	KILN #3 VENT FAN	136A	INLINE	FORWARD	140	0.50		4	Yes	IN-LINE POWER	17	DIRECT	1/3	115	1	(SKUTT) ENVIROVENT-2	1,2,8
EF-KILN-3B	KILN #3 BOOSTER VENT FAN	149A	INLINE	FORWARD	140	0.38	1039	6.3	Yes	INTERCONNECT	44	DIRECT	1/6	115	1	SQI-HP	1,2,8
EF-KILN-136	KILN ROOM EXHAUST FAN	M100	INLINE	FORWARD	270	0.50	1550	7	Yes	THERMOSTATIC	90	DIRECT	1/6	115	1	90SQN15D	1,2
EF-R1	SUBSLAB SOIL EXHAUST (RADON)	LOWER ROOF	DOWNBLAST	BACKWARD	200	0.89	2827	0	No	IN-LINE	8	DIRECT	1/4	120	1	(FANTECH) RN3	1,2,4
EF-R2	SUBSLAB SOIL EXHAUST (RADON)	LOWER ROOF	DOWNBLAST	BACKWARD	200	0.89	2827	0	No	IN-LINE	8	DIRECT	1/4	120	1	(FANTECH) RN3	1,2,4
EF-R3	SUBSLAB SOIL EXHAUST (RADON)	ROOF	DOWNBLAST	BACKWARD	200	0.89	2827	0	No	IN-LINE	8	DIRECT	1/4	120	1	(FANTECH) RN3	1,2,4
EF-R4	SUBSLAB SOIL EXHAUST (RADON)	ROOF	DOWNBLAST	BACKWARD	200	0.89	2827	0	No	IN-LINE	8	DIRECT	1/4	120	1	(FANTECH) RN3	1,2,4
SF-M100	MECHANICAL ROOM SUPPLY FAN	M100	INLINE	FORWARD	615	1.00	3450	5	Yes	THERMOSTATIC	57	DIRECT	1/2	115	3	12AF34D-C	1,2

NOTES
1. DISCONNECT SWITCH BY ELECTRICAL. STARTERS BY MECHANICAL.
2. PROVIDE CLASS 1 MOTORIZED EXHAUST DAMPER.
3. UL/cUL 762 LISTED. PROVIDE WITH 1 HR FIRE WRAP PER DIV 23 SPECS FOR DUCT CONNECTED TO KITCHEN EXHAUST FAN.
4. RADON ALARM TO BE TIED TO DDC SYSTEM TO ALERT SCHOOL AND DISTRICT OF FAN FAILURE TO MAKE IMMEDIATE REPAIR.
5. MOTORS BETWEEN 62 W AND 746 W SHALL BE ECM MOTOR. OTHER HIGHER HP MOTORS SHALL MEET MOTOR EFFICIENCY TABLE ON M0.0. APPLICABLE TO ALL FANS
6. PROVIDE WITH FACTORY CURBS TO MATCH UNIT WITH HINGED BASE AND FLEXIBLE WATERPROOF ELECTRICAL CABLE.
7. PROVIDE WITH CURB CAP AND INLET BOX ACCESSORY, PROVIDE WITH SPARK PROOF CONSTRUCTION.
8. KILN FANS OPERATE INDEPENDENTLY, INTERLOCK INLINE BOOSTER FANS WITH MATCHING KILN NUMBER

BID/PERMIT SET

CONDITIONAL USE NUMBER: CU2018-0016
DESIGN REVIEW NUMBER: DR2018-0114
SITE DEVELOPMENT PERMIT NUMBER: TBD
BUILDING PERMIT NUMBER: TBD

REGISTERED PROFESSIONAL ENGINEER
84086PE
DIGITAL SIGNATURE
OREGON
MARCH 9, 2018
CHRISTOPHER NARRAMORE

EXPIRES: 12/31/2020

Digitally signed by Chris Narramore
Date: 2019.03.14 08:53:45-07'00'

MECHANICAL SCHEDULES
ACMA
BEAVERTON SCHOOL DISTRICT

M6.1
74-18109-00
03/14/2019
REVISIONS

DLR Group
Architecture Engineering Planning Interiors

©2019, DLR Group Architecture & Engineering Inc., an Oregon corporation, ALL RIGHTS RESERVED

C:\Revit\74-18109-00_ACMA_MEP_2018_Central_smargolis.rvt
3/13/2019 10:09:14 PM

.DIFFUSER, REGISTER & GRILLE SCHEDULE.

MARK	MAX STATIC PD (IN WG)	MAX NC	MATERIAL	DAMPER (Y/N)	MOUNTING TYPE	BASIS OF DESIGN	NOTES
D-1							
D-2	0.10	20	STEEL	Yes	SEE PLANS	TITUS 300 RL	
D-3	0.10	20	STEEL	Yes	DUCT	TITUS DL	1,2
D-5	0.10	20	ALUM	Yes	SEE PLANS	TITUS TND	1,2
D-6	0.10	20	STEEL	Yes	DUCT	TITUS R-OMNI	1,2
D-7	0.10	20	STEEL	Yes	DUCT	TITUS R-300F	1,2
G-1	0.10	20	STEEL	Yes	CEILING	TITUS 350 RL (24x24)	1, 2
G-2	0.10	20	STEEL	Yes	CEILING	TITUS 350 RL	1, 2
G-3	0.10	20	STEEL				
G-4	0.10	20	STEEL	Yes	WALL	TITUS 8F	1, 2

NOTES
1. CONTRACTOR SHALL COORDINATE MOUNTING AND SURFACE CONSTRUCTION PRIOR TO FURNISHING MATERIAL.
2. SEE PLANS FOR LOCATION, NECK SIZE, FRAME TYPE AND CFM

.FIN TUBE RADIATOR SCHEDULE - HOT WATER.

MARK	CAPACITY (MBH)	ACTIVE LENGTH (FT)	MAX WPD (FT)	CONTROL VALVE	EWT (°F)	GPM	BRANCH CONNECTION SIZE (IN)	DEPTH (IN)	MTG TYPE	MTG HEIGHT AFF (IN)	FINISH	FINISHED END CONDITION	BASIS OF DESIGN	NOTES
FTR-1	12	28.0	5	3-WAY	125	8.5	1 1/4"	5"	WALL	15 1/2"	EXPOSED	FINISHED END	STERLING C433 -VB-C12	SEE BELOW

NOTES
1. PROVIDE WITH TOP OUTLET ENCLOSURE VB-C12
2. PIPE CONNECTION SIZES SHALL BE AS SHOWN ON PLAN
3. 2 -TIER MODEL @ 6" ON CENTER
4. FLUID IS WATER
5. RAMP DEDUCTIVE ALTERNATE REMOVES FTR-1 IF USED, SEE M1.4.

.SPLIT SYSTEM CONDENSER UNIT SCHEDULE.

MARK	SERVES	COOLING CAP. (MBH)	SEER	FAN NO.	ELECTRICAL DATA				OVERALL DIMENSIONS (LxWxH)	WEIGHT (LBS)	BASIS OF DESIGN (MITSUBISHI)	NOTES
					FLA	PH	MCA	MOCP				
CU-E100	AC-E100	18.0	14.3	1	0.4	1	13	15 A	43x22x35	97	PUY-A18NHA3	SEE BELOW
CU-E102	AC-E102	18.0	14.3	1	0.4	1	13	15 A	43x22x35	97	PUY-A18NHA3	SEE BELOW
CU-E201	AC-E201	18.0	14.3	1	0.4	1	13	15 A	43x22x35	97	PUY-A18NHA3	SEE BELOW

NOTES
1. INDOOR UNIT POWERED BY OUTDOOR UNIT.
2. PROVIDE REFRIGERANT PIPING BETWEEN INDOOR AND OUTDOOR UNIT. SIZE PER MFGR'S REC.

.SPLIT SYSTEM INDOOR UNIT SCHEDULE.

MARK	AREA SERVED	COOLING CAP. (BTH)	AIR FLOW	SEER	MCA	WEIGHT (LBS)	BASIS OF DESIGN (MITSUBISHI)	NOTES
AC-E100	MDF-E100	18000	635 CFM	14.3	2	60.00	PEA-A18AA	SEE BELOW
AC-E102	ELECTRICAL E102	18000	635 CFM	14.3	2	60.00	PEA-A18AA	SEE BELOW
AC-E201	IDF-E201	18000	635 CFM	14.3	2	60.00	PEA-A18AA	SEE BELOW

NOTES
1. CONDENSATE TO BE GRAVITY DRAINED TO NEAREST ACCEPTABLE OUTLET WITH 1" AIR GAP.
2. INCLUDE MANUFACTURER FILTER BOX WITH BOTTOM OUTLET AND G-1 RETURN GRILLE SIZED TO MATCH.

.ELECTRIC UNIT HEATER SCHEDULE

MARK	AIR FLOW	LOCATION	SENSIBLE CAP (MBH)	TOTAL WATTS	ELECTRICAL DATA			DIMESNIONS LXWXD (IN)	BASIS OF DESIGN	NOTES
					AMPS	V	PH			
EUH-101	500 CFM	FIRE RISER M101	10.2	3000	14.00	208	1	16"X14"X8"	QMARK MUH03-81	
EUH-140	350 CFM	WEST VESTIBULE 140	16.0	5000	14.00	208	3	45"X27"X10"	QMARK CUS93505203FF	

.SOUND ATTENUATOR SCHEDULE.

MARK	CFM	UNIT SERVED	MAX. PRESS. DROP (IN WG)	MAX FACE VELOCITY (FPM)	DUCT SIZE Ø	CONFIGURATION	ATTENUATOR LENGTH (IN)	SOUND DATA								MANUFACTURER (PRICE)	NOTES
								MIN. OPERATION INSERTION LOSS (Hz)									
								63	125	250	500	1000	2000	4000	8000		
SA-2-124	275	VAV-2-124	0.02	788	8"	INLINE	24"	6	9	18	34	47	41	38	29	CS	1

NOTES:
1. PROVIDE MASTIC SEALED SEAMS.

BID/PERMIT SET

CONDITIONAL USE NUMBER: CU2018-0016
DESIGN REVIEW NUMBER: DR2018-0114
SITE DEVELOPMENT PERMIT NUMBER: TBD
BUILDING PERMIT NUMBER: TBD

REGISTERED PROFESSIONAL ENGINEER
84086PE
DIGITAL SIGNATURE
OREGON
MARCH 9, 2018
CHRISTOPHER NARRAMORE

EXPIRES: 12/31/2020

Digitally signed by Chris Narramore
Date: 2019.03.14 08:53:59 -07'00'

MECHANICAL SCHEDULES
ACMA
BEAVERTON SCHOOL DISTRICT

M6.2
74-18109-00
03/14/2019
REVISIONS

DLR Group
Architecture Engineering Planning Interiors

©2019, DLR Group Architecture & Engineering Inc., an Oregon corporation, ALL RIGHTS RESERVED

C:\Revit\74-18109-00_ACMA_MEP_2018_Central_smargolis.rvt
3/13/2019 10:09:21 PM

.VAV TERMINAL UNIT SCHEDULE.

MARK	ROOM SERVED	PRIMARY AIR			MAX PD @ MAX FULL CFM (IN W.C.)	INLET SIZE (IN)	OUTLET DIMENSIONS (INxIN)	OVERALL DIMENSIONS (LxWxH)	STATIC PRESSURE		SOUND			HOT WATER COIL DATA								BASIS OF DESIGN	NOTES
		MAX.	COOLING MIN	HEATING CFM					INLET MAX. (IN W.C.)	DOWN STREAM (IN W.C.)	MAX DISCHARGE NC	MAX RADIATED NC	FACTORY SOUND ATTENUATOR	EAT (°F)	LAT (°F)	CAPACITY (MBH)	GPM	MAX W.P.D. (PSI)	EWT (°F)	BRANCH SIZE TO COIL (IN)	CONTROL VALVE		
VAV-1-101	101-ENTRY HALL	150	45	100	0.50	5"Ø	10x10	22x16x10	1.0	0.5	<20	<20	No	55	85	3.3	.25	6	125	1/2"	2-WAY	ENVIROTEC SDR-WC 5	SEE BELOW
VAV-1-102	102 RECEPTION	330	90	100	0.50	6"Ø	10x10	22x16x10	1.0	0.5	<20	<20	No	55	85	6.1	.64	6	125	1/2"	2-WAY	ENVIROTEC SDR-WC 6	SEE BELOW
VAV-1-102A	102A RECEPTION WAITING	450	135	200	0.50	8"Ø	12x10	22x18x10	1.0	0.5	<20	<20	No	55	85	5	.25	6	125	1/2"	2-WAY	ENVIROTEC SDR-WC 8	SEE BELOW
VAV-1-104	104 CONFERENCE	525	160	200	0.50	8"Ø	12x10	22x18x10	1.0	0.5	<20	<20	No	55	85	6.1	.64	6	125	1/2"	2-WAY	ENVIROTEC SDR-WC 8	SEE BELOW
VAV-1-105	105 HEALTH	175	70	100	0.50	5"Ø	10x10	22x16x10	1.0	0.5	<20	<20	No	55	85	3.3	.25	6	125	1/2"	2-WAY	ENVIROTEC SDR-WC 5	SEE BELOW
VAV-1-108	108 PRINCIPAL, 106 PRINCIPAL SECRETARY	525	160	500	0.50	8"Ø	12x10	22x18x10	1.0	0.5	<20	<20	No	55	85	16.3	1.49	6	125	3/4"	2-WAY	ENVIROTEC SDR-WC 8	SEE BELOW
VAV-1-109	109 WORKROOM	185	56	150	0.50	5"Ø	10x10	22x16x10	1.0	0.5	<20	<20	No	55	85	4.5	.5	6	125	1/2"	2-WAY	ENVIROTEC SDR-WC 5	SEE BELOW
VAV-1-110	110 ASSISTANT PRINCIPAL	300	90	280	0.50	6"Ø	10x10	22x16x10	1.0	0.5	<20	<20	No	55	85	9.1	.97	6	125	1/2"	2-WAY	ENVIROTEC SDR-WC 6	SEE BELOW
VAV-1-112	112 BREAKROOM	730	220	620	0.50	10"Ø	14x12	24x20x12.5	1.0	0.5	<20	<20	No	55	85	20.2	1.6	6	125	3/4"	2-WAY	ENVIROTEC SDR-WC 10	SEE BELOW
VAV-1-114	114 FILM	1050	315	850	0.50	12"Ø	16x15	24x22x15	1.0	0.5	<20	<20	No	55	85	26.7	2.8	6	125	3/4"	2-WAY	ENVIROTEC SDR-WC 12	SEE BELOW
VAV-1-114A	114A FILM STUDIO, 114C FILM STUDIO	300	210	240	0.50	6"Ø	10x10	22x16x10	1.0	0.5	<20	<20	No	55	85	7.7	.8	6	125	1/2"	2-WAY	ENVIROTEC SDR-WC 6	SEE BELOW
VAV-1-118	118 CONFERENCE	425	128	380	0.50	8"Ø	12x10	22x18x10	1.0	0.5	<20	<20	No	55	85	12.4	1.2	6	125	1/2"	2-WAY	ENVIROTEC SDR-WC 8	SEE BELOW
VAV-1-131	131 EAST WEST HALL	1200	360	920	0.50	12"Ø	16x15	24x22x15	1.0	0.5	<20	<20	No	55	85	28.2	3	6	125	3/4"	2-WAY	ENVIROTEC SDR-WC 12	SEE BELOW
VAV-1-132	132A CAREER CENTER	1100	170	1120	0.50	12"Ø	16x15	24x22x15	1.0	0.5	<20	<20	No	55	85	36	3	6	125	1"	2-WAY	ENVIROTEC SDR-WC 12	SEE BELOW
VAV-1-132A	132B OFFICE, 132C OFFICE, 132D OFFICE	375	170	260	0.50	6"Ø	10x10	22x16x10	1.0	0.5	<20	<20	No	55	85	8.4	.89	6	125	1/2"	2-WAY	ENVIROTEC SDR-WC 6	SEE BELOW
VAV-2-100A	100A SOUTH RAMPS	1350	405	1080	0.50	14"Ø	20x18	28x26x17.5	1.0	0.5	<20	<20	No	55	85	34.8	3	6	125	1"	2-WAY	ENVIROTEC SDR-WC 14	SEE BELOW
VAV-2-113	113 COMPUTER LAB	1475	445	1180	0.50	14"Ø	20x18	28x26x17.5	1.0	0.5	<20	<20	No	55	85	38.2	3.7	6	125	1"	2-WAY	ENVIROTEC SDR-WC 14	SEE BELOW
VAV-2-115	115 LIBRARY	2000	585	1555	0.50	14"Ø	20x18	28x26x17.5	1.0	0.5	<20	<20	No	55	85	50.2	4.5	6	125	1"	2-WAY	ENVIROTEC SDR-WC 14	SEE BELOW
VAV-2-121	121 MUSIC HALL, 120 NORTH RAMPS	385	135	310	0.50	6"Ø	10x10	22x16x10	1.0	0.5	<20	<20	No	55	85	9.5	1	6	125	1/2"	2-WAY	ENVIROTEC SDR-WC 6	SEE BELOW
VAV-2-122A	122 SMALL ENSEMBLE SOUTH	1400	425	1120	0.50	14"Ø	20x18	28x26x17.5	1.0	0.5	<20	<20	No	55	85	72	5.2	6	125	1"	2-WAY	ENVIROTEC SDR-WC 14	SEE BELOW
VAV-2-122B	122 SMALL ENSEMBLE NORTH	1400	425	1120	0.50	14"Ø	20x18	28x26x17.5	1.0	0.5	<20	<20	No	55	85	36.3	3.3	6	125	1"	2-WAY	ENVIROTEC SDR-WC 14	SEE BELOW
VAV-2-124	124 ENSEMBLE PRACTICE, 124A RECORDING	435	200	320	0.50	8"Ø	12x10	22x18x10	1.0	0.5	<20	<20	No	55	85	10.2	1.1	6	125	1/2"	2-WAY	ENVIROTEC SDR-WC 8	SEE BELOW
VAV-2-126A	126 LARGE ENSEMBLE SOUTH	1540	630	1230	0.50	14"Ø	20x18	28x26x17.5	1.0	0.5	<20	<20	No	55	85	74.9	8	6	125	1"	2-WAY	ENVIROTEC SDR-WC 14	SEE BELOW
VAV-2-126B	126 LARGE ENSEMBLE NORTH	1540	630	1230	0.50	14"Ø	20x18	28x26x17.5	1.0	0.5	<20	<20	No	55	85	50	4.5	6	125	1"	2-WAY	ENVIROTEC SDR-WC 14	SEE BELOW
VAV-2-129	123 MUSIC OFFICE, 125 PRACTCE, 126 PRACTICE, 129 PRACTICE	300	120	240	0.50	6"Ø	10x10	22x16x10	1.0	0.5	<20	<20	No	55	85	7.7	.8	6	125	1/2"	3-WAY	ENVIROTEC SDR-WC 6	SEE BELOW
VAV-4-136	136 3D ART	1835	550	1470	0.50	16"Ø	24x18	28x30x17.5	1.0	0.5	20	<20	No	55	85	47.8	4.2	6	125	1"	2-WAY	ENVIROTEC SDR-WC 16	SEE BELOW
VAV-4-138	138 2D ART	1425	430	1140	0.50	14"Ø	20x18	26x26x17.5	1.0	0.5	<20	<20	No	55	85	37.1	3.3	6	125	1"	2-WAY	ENVIROTEC SDR-WC 14	SEE BELOW
VAV-4-142	142 TEACHER PLANNING	1075	325	860	0.50	10"Ø	14x12	24x20x12.5	1.0	0.5	<20	<20	No	55	85	28	2.3	6	125	3/4"	2-WAY	ENVIROTEC SDR-WC 10	SEE BELOW
VAV-4-143	143 DESIGN STUDIO	1250	375	1000	0.50	12"Ø	16x15	24x22x15	1.0	0.5	<20	<20	No	55	85	31	3.9	6	125	1"	2-WAY	ENVIROTEC SDR-WC 12	SEE BELOW
VAV-4-144	144 SCIENCE	1100	440	880	0.50	12"Ø	16x15	24x22x15	1.0	0.5	<20	<20	No	55	85	27.1	2.76	6	125	3/4"	2-WAY	ENVIROTEC SDR-WC 12	SEE BELOW
VAV-4-145	145 SCIENCE LAB	1200	480	960	0.50	12"Ø	16x15	24x22x15	1.0	0.5	<20	<20	No	55	85	29.8	3.5	6	125	1"	2-WAY	ENVIROTEC SDR-WC 12	SEE BELOW
VAV-4-146	146 SCIENCE	1050	420	840	0.50	12"Ø	16x15	24x22x15	1.0	0.5	<20	<20	No	55	85	26.2	2.65	6	125	3/4"	2-WAY	ENVIROTEC SDR-WC 12	SEE BELOW
VAV-4-147A	147 SCIENCE LAB	1325	440	1060	0.50	14"Ø	20x18	28x26x17.5	1.0	0.5	<20	<20	No	55	85	34.5	3	6	125	1"	3-WAY	ENVIROTEC SDR-WC 14	SEE BELOW
VAV-4-149	149 SCIENCE PREP	140	45	110	0.50	5"Ø	10x10	22x16x10	1.0	0.5	<20	<20	No	55	85	3.5	.27	6	125	1/2"	2-WAY	ENVIROTEC SDR-WC 5	SEE BELOW
VAV-4-151	151 SCIENCE HALL	650	195	520	0.50	10"Ø	14x12	24x20x12.5	1.0	0.5	<20	<20	No	55	85	16.3	1.6	6	125	3/4"	2-WAY	ENVIROTEC SDR-WC 10	SEE BELOW
VAV-5-201	201 PHOTO	1100	330	920	0.50	12"Ø	16x15	24x22x15	1.0	0.5	<20	<20	No	55	85	28.6	3.2	6	125	3/4"	2-WAY	ENVIROTEC SDR-WC 12	SEE BELOW
VAV-5-203	203 DARK ROOM	800	240	640	0.50	10"Ø	14x12	24x20x12.5	1.0	0.5	<20	<20	No	55	85	20.1	2.5	6	125	3/4"	2-WAY	ENVIROTEC SDR-WC 10	SEE BELOW
VAV-5-205	205 SPED, 205A OFFICE, 205B OFFICE, 205C OFFICE, 205D CONFERENCE	1375	415	1100	0.50	14"Ø	20x18	28x26x17.5	1.0	0.5	<20	<20	No	55	85	35.7	3.2	6	125	1"	2-WAY	ENVIROTEC SDR-WC 14	SEE BELOW
VAV-5-207	207 CLASSROOM	1325	400	1060	0.50	14"Ø	20x18	28x26x17.5	1.0	0.5	<20	<20	No	55	85	34.5	3	6	125	1"	2-WAY	ENVIROTEC SDR-WC 14	SEE BELOW
VAV-5-209	209 CLASSROOM	1350	405	1080	0.50	14"Ø	20x18	28x26x17.5	1.0	0.5	<20	<20	No	55	85	34.8	3	6	125	1"	2-WAY	ENVIROTEC SDR-WC 14	SEE BELOW
VAV-5-210	210 EXTENDED LEARNING, 210A SMALL GROUP, 206 SW HALL	1675	840	1340	0.50	14"Ø	20x18	28x26x17.5	1.0	0.5	<20	<20	No	55	85	41.6	5.3	6	125	1"	2-WAY	ENVIROTEC SDR-WC 14	SEE BELOW
VAV-5-220	221/200 CIRCULATION GALLERY	250	75	200	0.50	6"Ø	10x10	22x16x10	1.0	0.5	<20	<20	No	55	85	6.5	0.6	6	125	1/2"	2-WAY	ENVIROTEC SDR-WC 6	SEE BELOW
VAV-6-211	211 CLASSROOM	1375	415	1100	0.50	14"Ø	20x18	28x26x17.5	1.0	0.5	<20	<20	No	55	85	35.7	3.2	6	125	1"	3-WAY	ENVIROTEC SDR-WC 14	SEE BELOW
VAV-6-212	212 CLASSROOM	1250	375	1000	0.50	12"Ø	16x15	24x22x15	1.0	0.5	<20	<20	No	55	85	32.3	2.4	6	125	1"	2-WAY	ENVIROTEC SDR-WC 12	SEE BELOW
VAV-6-214	214 CLASSROOM	1250	375	1000	0.50	12"Ø	16x15	24x22x15	1.0	0.5	<20	<20	No	55	85	30.9	3.8	6	125	1"	2-WAY	ENVIROTEC SDR-WC 12	SEE BELOW
VAV-6-216	216 CLASSROOM	1200	360	960	0.50	12"Ø	16x15	24x22x15	1.0	0.5	<20	<20	No	55	85	29.6	3.5	6	125	1"	2-WAY	ENVIROTEC SDR-WC 12	SEE BELOW
VAV-6-217	217 DANCE OFFICE	125	50	100	0.50	5"Ø	10x10	22x16x10	1.0	0.5	<20	<20	No	55	85	23.3	2	6	125	1/2"	2-WAY	ENVIROTEC SDR-WC 5	SEE BELOW
VAV-6-220	220/218 CHANGING	650	195	520	0.50	10"Ø	14x12	24x20x12.5	1.0	0.5	<20	<20	No	55	85	16.5	1.7	6	125	3/4"	2-WAY	ENVIROTEC SDR-WC 10	SEE BELOW
VAV-6-221	221 HALL	450	135	360	0.50	8"Ø	12x10	22x18x10	1.0	0.5	<20	<20	No	55	85	11.6	1.1	6	125	1/2"	2-WAY	ENVIROTEC SDR-WC 8	SEE BELOW
VAV-7-234	234 DANCE	2350	940	1880	0.50	16"Ø	24x18	28x30x17.5	1.0	0.5	20	<20	No	55	85	60.5	5	6	125	1"	2-WAY	ENVIROTEC SDR-WC 16	SEE BELOW
VAV-7-236	236 DANCE	2350	940	1880	0.50	16"Ø	24x18	28x30x17.5	1.0	0.5	20	<20	No	55	85	60.5	5	6	125	1"	2-WAY	ENVIROTEC SDR-WC 16	SEE BELOW
VAV-7-238	238 DANCE	2350	940	1880	0.50	16"Ø	24x18	28x30x17.5	1.0	0.5	20	<20	No	55	85	60.5	5	6	125	1"	2-WAY	ENVIROTEC SDR-WC 16	SEE BELOW
VAV-8-242	242 CLASSROOM	1250	375	1000	0.50	12"Ø	16x15	24x22x15	1.0	0.5	<20	<20	No	55	85	30.9	3.8	6	125	1"	2-WAY	ENVIROTEC SDR-WC 12	SEE BELOW
VAV-8-243	243 CLASSROOM	1350	405	1080	0.50	14"Ø	20x18	28x26x17.5	1.0	0.5	<20	<20	No	55	85	34.8	3	6	125	1"	2-WAY	ENVIROTEC SDR-WC 14	SEE BELOW
VAV-8-244	244 CLASSROOM	1250	375	1000	0.50	12"Ø	16x15	24x22x15	1.0	0.5	<20	<20	No	55	85	30.9	3.8	6	125	1"	2-WAY	ENVIROTEC SDR-WC 12	SEE BELOW
VAV-8-245	245 CLASSROOM	1350	405	1080	0.50	14"Ø	20x18	28x26x17.5	1.0	0.5	<20	<20	No	55	85	34.8	3	6	125	1"	2-WAY	ENVIROTEC SDR-WC 14	SEE BELOW
VAV-8-246	246 CLASSROOM	1300	390	1040	0.50	12"Ø	16x15	24x22x15	1.0	0.5	<20	<20	No	55	85	32.2	4.3	6	125	1"	2-WAY	ENVIROTEC SDR-WC 12	SEE BELOW
VAV-8-247	247 CLASSROOM	1200	360	960	0.50	12"Ø	16x15	24x22x15	1.0	0.5	<20	<20	No	55	85	29.8	3.5	6	125	1"	2-WAY	ENVIROTEC SDR-WC 12	SEE BELOW
VAV-8-249	249 TEACHER PLANNING	1200	360	960	0.50	12"Ø	16x15	24x22x15	1.0	0.5	<20	<20	No	55	85	29.8	3.5	6	125	1"	3-WAY	ENVIROTEC SDR-WC 12	SEE BELOW
VAV-8-250	250 EXTENDED LEARNING	1050	315	840	0.50	12"Ø	16x15	24x22x15	1.0	0.5	<20	<20	No	55	85	26.5	2.8	6	125	3/4"	2-WAY	ENVIROTEC SDR-WC 12	SEE BELOW
VAV-8-251	251 NE HALL	625	190	500	0.50	10"Ø	14x12	24x20x12.5	1.0	0.5	<20	<20	No	55	85	15.6	1.5	6	125	3/4"	2-WAY	ENVIROTEC SDR-WC 10	SEE BELOW

NOTES:
1. FACTORY INSTALL CONTROLS FURNISHED AS PART OF SPECIFICATION 230923
2. WIDTH DIMENSION INCLUDES CONTROL ENCLOSURE.
3. NC RATINGS BASED ON INDICATED INLET/OUTLET PRESSURES.
4. FLUID IS WATER.
5. CONTRACTOR SHALL INSTALL TERMINAL UNIT COIL CONNECTIONS AND CONTROLLER ACCESS ON THE SIDE NEAREST TO THE CENTER OF CORRIDORS UNLESS SHOWN OTHERWISE.
6. RAMP DEDUCTIVE ALTERNATE REMOVES VAV-2-100A. IF ALTERNATE IS USED, SEE M1.4 FOR LAYOUT.

.VAV TERMINAL UNIT SCHEDULE - ELECTRIC HEATING COIL.

MARK	ROOM SERVED	UNIT	PRIMARY AIR			MAX PD @ MAX FULL CFM (IN W.C.)	INLET SIZE (IN)	OUTLET DIMENSIONS (INxIN)	OVERALL DIMENSIONS (LxWxH)	STATIC PRESSURE		SOUND			ELECTRIC COIL DATA					BASIS OF DESIGN	NOTES
			MAX.	COOLING MIN	HEATING CFM					INLET MAX. (IN W.C.)	DOWN STREAM (IN W.C.)	MAX DISCHARGE NC	MAX RADIATED NC	FACTORY SOUND ATTENUATOR	EAT (°F)	LAT (°F)	CAPACITY (kW)	V/Ph/Hz	HEATER AMPS (A)		
VAV-4-147B	SCIENCE (CHEM) 147	RTU-4	470	470	470	0.50	10"Ø	14x12	24x20x12.5	1.0	0.5	<20	<20	No	55	70	2.5	277/1/60	9.1	ENVIROTEC SDR-EH 10	SEE BELOW

NOTES:
1. PROVIDE WITH SCR CONTROLS.
2. FACTORY INSTALLED CONTROLS.
3. NC RATING BASED ON INDICATED INLET/OUTLET PRESSURES.

BID/PERMIT SET

CONDITIONAL USE NUMBER: CU2018-0016
DESIGN REVIEW NUMBER: DR2018-0114
SITE DEVELOPMENT PERMIT NUMBER: TBD
BUILDING PERMIT NUMBER: TBD

REGISTERED PROFESSIONAL ENGINEER
84086PE
DIGITAL SIGNATURE
OREGON
MARCH 9, 2010
CHRISTOPHER NARRAMORE

EXPIRES: 12/31/2020

Digitally signed by Chris Narramore
Date: 2019.03.14 08:54:10 -07'00'

MECHANICAL SCHEDULES
ACMA
BEAVERTON SCHOOL DISTRICT

M6.3
74-18109-00
03/14/2019
REVISIONS

DLR Group
Architecture Engineering Planning Interiors

©2019, DLR Group Architecture & Engineering Inc., an Oregon corporation, ALL RIGHTS RESERVED

C:\Revit\74-18109-00_ACMA_MEP_2018_Central_sreigh.rvt
3/14/2019 8:14:30 AM

System Name: RTU-1

OUTSIDE AIR INTAKE INFORMATION	Vou	Vps	Table 6-3: System Vent...	Ev Appendix A Method	Use Appendix A...	Vot
	1772	2913.098633	0.3	0.79	Yes	2241
					OA %	29%

ROOM INFORMATION			AIRFLOW CALCULATIONS									VENTILATION CALCULATIONS									
Rooms and Zones	Floor Area (ft2)	Trace Population PZ	Space Cooling Sensible Load (btu/hr)	Space Cooling Latent Load (btu/hr)	Calculated Cooling Supply (CFM)	Actual Cooling Supply (CFM)	Space Heating Sensible Load (btu/hr)	Calculated Heating Supply (CFM)	Heating Supply (CFM)	Supplemental Heat (btu/hr)	Box Minimum (CFM)	Room Type	Rp CFM/Person	Ra CFM/SF	Rp*Pz	Pa*Az	Vbz	Ez	Voz	Zp	Evz
VAV-1-101											30%										
01-101-Entry Hall	1131	0.0	3153	0	147	150	0	0	100.0	0	88	Corridors	0	0.06	0	68	68	1	68	0.77	0.84
Zone Total	1131	0.0	3153	0	147	150	0	0	100.0		88				0	68	68		68		
VAV-1-102											30%										
01-102-Reception	451	3.0	3657	600	170	175	0	0	140.6		54	Reception Area	5	0.06	15	27	42	1	42	0.78	0.83
01-103-Bookkeeping	134	1.0	1114	200	52	55	0	0	44.2		17	Office Space	5	0.06	5	8	13	1	13	0.77	0.84
01-103A-Record Storage	92	0.0	255	0	12	50	0	0	40.2		15	Storage	0	0.12	0	11	11	1	11	0.72	0.89
Zone Total	677	4	5026	800	234	280	0	0	225.0		86				20	46	66		66		
VAV-1-102A											30%										
01-102A-Reception Waiting	407	8	8818	1472	411	420	2596	161	335.0		126	Reception Area	5	0.06	40	24	64	1	64	0.51	1.10
Zone Total	407	8	8818	1472	411	420	2596	161	335.0		126				40	24	64		64		
VAV-1-104											30%										
01-104-Conference S	371	19	10636	3494	496	525	2888	180	200.0		158	Conference/Meeting	5	0.06	92.64014	22	115	1	115	0.73	0.88
Zone Total	371	19	10636	3494	496	525	2888	180	200.0		158				92.64014	22	115		115		
VAV-1-105											40%										
01-105-Health	233	4	2503	800	117	125	0	0	71.4		50	Office Space	5	0.06	20	14	34	1	34	0.68	0.93
01-UR101-WC Health	69	0	303	0	14	50	0	0	28.6		20	Other	0	0	0	0	0	1	0	0.00	1.61
Zone Total	303	4	2807	800	131	175	0	0	100.0		70				20	14	34		34		
VAV-1-108											30%										
01-106-Principal Secretary	152	1	2509	113	117	125	1103	69	119.0		38	Office Space	5	0.06	5	9	14	1	14	0.38	1.23
01-108-Principal	328	5	8430	856	393	400	3433	213	381.0		120	Office Space	5	0.06	25	20	45	1	45	0.37	1.24
Zone Total	480	6	10939	969	510	525	4536	282	500.0		158				30	29	59		59		
VAV-1-109											30%										
01-109-Work Room	388	5	3876	1000	181	185	0	0	150.0		63	Office Space	5	0.06	25	23	48	1	48	0.77	0.84
Zone Total	388	5	3876	1000	181	185	0	0	150.0		63				25	23	48		48		
VAV-1-110											30%										
01-110-Assistant Principal	235	5	5961	948	278	300	1344	84	280.0		90	Office Space	5	0.06	25	14	39	1	39	0.43	1.17
Zone Total	235	5	5961	948	278	300	1344	84	280.0		90				25	14	39		39		
VAV-1-112											30%										
01-112-Breakroom	733	30	15371	5873	717	730	2641	164	620.0		252	Office Space	5	0.06	150	44	194	1	194	0.77	0.84
Zone Total	733	30	15371	5873	717	730	2641	164	620.0		252				150	44	194		194		
VAV-1-114											30%										
01-114-Film	1017	36	22392	7200	1044	1050	1530	95	850.0		627	Classroom (>9yrs)	10	0.12	360	122	482	1	482	0.77	0.84
Zone Total	1017	36	22392	7200	1044	1050	1530	95	850.0		627				360	122	482		482		
VAV-1-114A											1										
01-114A-Film Studio	130	4	1881	800	88	100	0	0	80.0		70	Classroom (>9yrs)	10	0.12	40	16	56	1	56	0.79	0.81
01-114B-Film Storage-Studio	169	4	2146	800	100	100	0	0	80.0		70	Storage	0	0.12	0	20	20	1	20	0.29	1.32
01-114C-Film Studio	144	4	1973	800	92	100	0	0	80.0		70	Classroom (>9yrs)	10	0.12	40	17	57	1	57	0.82	0.79
Zone Total	443	12	6000	2400	280	300	0	0	240.0		210				80	53	133		133		
VAV-1-118											30%										
01-118-Conference N	273	14	8461	2657	394	425	1649	102	380.0		128	Conference/Meeting	5	0.06	68.2162	16	85	1	85	0.66	0.95
Zone Total	273	14	8461	2657	394	425	1649	102	380.0		128				68.2162	16	85		85		
VAV-1-131											30%										
01-131A-Commons Storage	74	0	207	0	10	50	0	0	38.3		15	Storage	0	0.12	0	9	9	1	9	0.59	1.02
01-131-E/W Hall Commons S	2544	50	24507	13750	1143	1150	0	0	881.7		345	Corridors	0	0.06	0	153	153	1	153	0.44	1.17
Zone Total	2618	50	24714	13750	1152	1200	0	0	920.0		360				0	162	162		162		
VAV-1-132											30%										
01-132-Career Center	1076	10	23438	1821	1093	1100	6221	387	1120.0		330	Office Space	5	0.06	50	65	115	1	115	0.35	1.26
Zone Total	1076	10	23438	1821	1093	1100	6221	387	1120.0		330				50	65	115		115		
VAV-1-132A											45%										
01-132A-Record Storage	78	0	219	0	10	50	0	0	34.7		23	Storage	0	0.12	0	9	9	1	9	0.42	1.19
01-132B-Counselor	137	5	2135	1000	100	100	0	0	69.3		45	Office Space	5	0.06	25	8	33	1	33	0.74	0.87
01-132C-Counselor	137	5	2135	1000	100	100	0	0	69.3		45	Office Space	5	0.06	25	8	33	1	33	0.74	0.87
01-132D-Counselor Ext	137	5	2716	987	127	125	862	54	86.7		56	Office Space	5	0.06	25	8	33	1	33	0.59	1.02
Zone Total	491	15	7205	2987	336	375	862	54	260.0		169				75	34	109		109		
System Totals	10642	217	158797	46171	7403	7740	24268	1508	6280.0		2913				1035.856...	737	1772		1772	0.82	

BID/PERMIT SET

CONDITIONAL USE NUMBER: CU2018-0016
DESIGN REVIEW NUMBER: DR2018-0114
SITE DEVELOPMENT PERMIT NUMBER: TBD
BUILDING PERMIT NUMBER: TBD

REGISTERED PROFESSIONAL ENGINEER
84086PE
DIGITAL SIGNATURE
OREGON
MARCH 9, 2019
CHRISTOPHER NARRAMORE
EXPIRES: 12/31/2020

Digitally signed by Chris Narramore
Date: 2019.03.14 09:54:25 -07'00'

MECHANICAL SCHEDULES - VENT. CALC

ACMA
BEAVERTON SCHOOL DISTRICT

M6.4
74-18109-00
03/14/2019
REVISIONS

DLR Group
Architecture Engineering Planning Interiors

©2019_DLR Group Architecture & Engineering Inc., an Oregon corporation, ALL RIGHTS RESERVED

C:\Revit\74-18109-00_ACMA_MEP_2018_Central_smargolis.rvt
3/13/2019 10:09:29 PM

System Name: RTU-2

OUTSIDE AIR INTAKE INFORMATION	Vou	Vps	Table 6-3: System Vent...	Ev Appendix A Method	Use Appendix A...	Vot
	3890	4521.727728	0.3	0.86	Yes	4503
					OA %	38%

ROOM INFORMATION			AIRFLOW CALCULATIONS									VENTILATION CALCULATIONS									
Rooms and Zones	Floor Area (ft2)	Trace Population PZ	Space Cooling Sensible Load (btu/hr)	Space Cooling Latent Load (btu/hr)	Calculated Cooling Supply (CFM)	Actual Cooling Supply (CFM)	Space Heating Sensible Load (btu/hr)	Calculated Heating Supply (CFM)	Heating Supply (CFM)	Supplemental Heat (btu/hr)	Box Minimum (CFM)	Room Type	Rp CFM/Person	Ra CFM/SF	Rp*Pz	Pa*Az	Vbz	Ez	Voz	Zp	Evz
VAV-2-100A											30%										
02-100A-South Ramps	742	0	28308	-264	1320	1350	-1064	-66	1080	12000	405	Corridors	0	0.06	0	45	45	1	45	0.11	1.75
Zone Total	742	0	28308	-264	1320	1350	-1064	-66	1080		405				0	45	45		45		
VAV-2-113											30%										
02-113-Computer Lab	1013	36	31069	7111	1448	1475	5003	311	1180		506	Computer Lab	10	0.12	360	122	482	1	482	0.95	0.91
Zone Total	1013	36	31069	7111	1448	1475	5003	311	1180		506				360	122	482		482		
VAV-2-115											30%										
02-115A-Lit/IT Office	195	4	2854	800	133	145	293	18	116		44	Office Space	5	0.06	20	12	32	1	32	0.73	1.13
02-115B-Storage	115	0	629	0	29	50	173	11	40		15	Storage	0	0.12	0	14	14	1	14	0.92	0.94
02-115-Library	1675	60	36964	9300	1723	1750	3110	193	1400		525	Library	5	0.12	300	201	501	1	501	0.95	0.91
Zone Total	1985	64	40446	10100	1886	1945	3576	222	1556		584				320	226	546		546		
VAV-2-121											35%										
02-121A-Storage	211	0	1154	0	54	75	318	20	60		26	Storage	0	0.12	0	25	25	1	25	0.97	0.89
02-121-Music Hall	496	0	2737	0	128	130	746	46	104		46	Corridors	0	0.06	0	30	30	1	30	0.65	1.21
02-120-North Ramps	664	0	3855	-3	180	180	1619	101	144		63	Corridors	0	0.06	0	40	40	1	40	0.63	1.23
Zone Total	1371	0	7746	-3	361	385	2682	167	308		135				0	95	95		95		
VAV-2-122											30%										
02-122-Ensemble Small	1301	110	58345	22000	2720	2750	2843	177	2200		1238	Music/Theater...	10	0.06	1100	78	1178	1	1178	0.95	0.91
02-122A-Ensemble Storage	186	0	1017	0	47	50	280	17	40		23	Storage	0	0.12	0	22	22	1	22	0.99	0.87
Zone Total	1487	110	59361	22000	2767	2800	3123	194	2240		1260				1100	100	1200		1200		
VAV-2-124											50%										
02-124A-Recording	154	4	2518	800	117	125	232	14	100		63	Music/Theater...	10	0.06	40	9	49	1	49	0.79	1.07
02-124-Ensemble Practice	283	12	5783	2400	270	275	426	26	220		138	Music/Theater...	10	0.06	120	17	137	1	137	1.00	0.86
Zone Total	438	16	8301	3200	387	400	658	41	320		200				160	26	186		186		
VAV-2-126											30%										
02-126A-Large Ensemble...	241	0	1541	-2	72	75	817	51	60		32	Storage	0	0.12	0	29	29	1	29	0.90	0.96
02-126-Large Ensemble	2017	110	63024	21888	2938	3000	9257	575	2400		1280	Music/Theater...	10	0.06	1100	121	1221	1	1221	0.95	0.91
Zone Total	2258	110	64566	21885	3010	3075	10075	626	2460		1312				1100	150	1250		1250		
VAV-2-129											40%										
02-123-Music Office	93	2	1386	400	65	75	140	9	60		30	Office Space	5	0.06	10	6	16	1	16	0.52	1.34
02-125-Practice	60	4	1589	800	74	75	90	6	60		30	Office Space	5	0.06	20	4	24	1	24	0.79	1.07
02-127-Practice	59	4	1581	800	74	75	89	6	60		30	Office Space	5	0.06	20	4	24	1	24	0.78	1.08
02-129-Practice	58	4	1571	800	73	75	87	5	60		30	Office Space	5	0.06	20	3	23	1	23	0.78	1.08
Zone Total	270	14	6127	2800	286	300	406	25	240		120				70	16	86		86		
System Totals	9563	350	245924	66829	11465	11730	24458	1520	9384		4522				3110	780	3890		3890	1.00	

System Name: RTU-3

OUTSIDE AIR INTAKE INFORMATION	Vou	Vps	Table 6-3: System Vent...	Ev Appendix A Method	Use Appendix A...	Vot
	3299	4092.5	0.3	0.87	Yes	3299
					OA %	40%

ROOM INFORMATION			AIRFLOW CALCULATIONS									VENTILATION CALCULATIONS									
Rooms and Zones	Floor Area (ft2)	Trace Population PZ	Space Cooling Sensible Load (btu/hr)	Space Cooling Latent Load (btu/hr)	Calculated Cooling Supply (CFM)	Actual Cooling Supply (CFM)	Space Heating Sensible Load (btu/hr)	Calculated Heating Supply (CFM)	Heating Supply (CFM)	Supplemental Heat (btu/hr)	Box Minimum (CFM)	Room Type	Rp CFM/Person	Ra CFM/SF	Rp*Pz	Pa*Az	Vbz	Ez	Voz	Zp	Evz
Commons RTU											50%										
03-141-Commons	5449	300	146931	81567	6850	6900	27545	1712	5520		3450	Cafeteria...	7.5	0.18	2250	981	3231	1	3231	0.94	0.87
07-241-Dance Balcony	1137	0	22777	-318	1062	1100	7421	461	880		550	Corridors	0	0.06	0	68	68	1	68	0.12	1.68
05-RR200-Restrooms S	526	0	3899	0	182	185	791	49	148		92.5	Other	0	0	0	0	0	1	0	0.00	1.81
Zone Total	7112	300	173607	81249	8093	8185	35757	2223	6548		4092.5				2250	1049	3299		3299		
System Totals	7112.210...	300	173607	81249	8093	8185	35757	2223	6548		4093				2250	1049	3299		3299	0.94	

BID/PERMIT SET

CONDITIONAL USE NUMBER: CU2018-0016
DESIGN REVIEW NUMBER: DR2018-0114
SITE DEVELOPMENT PERMIT NUMBER: TBD
BUILDING PERMIT NUMBER: TBD

REGISTERED PROFESSIONAL ENGINEER
84086PE
DIGITAL SIGNATURE
OREGON
MARCH 9, 2018
CHRISTOPHER NARRAMORE
EXPIRES: 12/31/2020
Digitally signed by Chris Narramore
Date: 2019.03.14 09:54:38 -07'00'

MECHANICAL SCHEDULES - VENT. CALC
ACMA
BEAVERTON SCHOOL DISTRICT

M6.5
74-18109-00
03/14/2019
REVISIONS

DLR Group
Architecture Engineering Planning Interiors

© 2019 DLR Group Architecture & Engineering Inc., an Oregon corporation, ALL RIGHTS RESERVED

C:\Revit\74-18109-00_ACMA_MEP_2018_Central_smargolis.rvt
3/13/2019 10:09:35 PM

System Name: RTU-4

OUTSIDE AIR INTAKE INFORMATION	Vou	Vps	Table 6-3: System Vent...	Ev Appendix A Method	Use Appendix A...	Vot
	4933	5264.374918	0.3	0.96	Yes	5140
					OA %	47%

ROOM INFORMATION			AIRFLOW CALCULATIONS									VENTILATION CALCULATIONS								
Rooms and Zones	Floor Area (ft2)	Trace Population PZ	Space Cooling Sensible Load (btu/hr)	Space Cooling Latent Load (btu/hr)	Calculated Cooling Supply (CFM)	Actual Cooling Supply (CFM)	Space Heating Sensible Load (btu/hr)	Calculated Heating Supply (CFM)	Heating Supply (CFM)	Supplemental Heat (btu/hr)	Box Minimum (CFM)	Room Type	Rp CFM/Person	Ra CFM/SF	Rp*Pz	Pa*Az	Vbz	Ez	Voz	Zp	Evz
VAV-4-136											30%										
04-134-Riser and Commons...	625.190125	0	1742	0	81	200	0	0	160		92	Storage	0	0.12	0	75	75	1	75	0.81	1.13
04-136-3D Art	1889.90271	36	32522	8889	1516	1550	3599	224	1240		716	Art Classroom	10	0.18	360	340	700	1	700	0.98	0.96
04-136A-Kiln	181.092468	0	1706	0	80	85	0	0	68		39	Art Classroom	10	0.18	0	33	33	1	33	0.83	1.11
Zone Total	2696.185...	36	35970	8889	1677	1835	3599	224	1468		848				360	448	808		808		
VAV-4-138											30%										
04-138-2D Art	1599.105...	36	30090	9044	1403	1425	5578	347	1140		680	Art Classroom	10	0.18	360	288	648	1	648	0.95	0.98
Zone Total	1599.105...	36	30090	9044	1403	1425	5578	347	1140		680				360	288	648		648		
VAV-4-142											30%										
04-142-Teacher...	990.963806	36	22244	7098	1037	1075	3057	190	860		503	Classroom (>9yrs)	10	0.12	360	119	479	1	479	0.95	0.98
Zone Total	990.963806	36	22244	7098	1037	1075	3057	190	860		503				360	119	479		479		
VAV-4-143											30%										
04-143-Design Studio	1164.004...	36	26453	8878	1233	1250	2918	181	1000		598	Wood / Metal...	10	0.18	360	210	570	1	570	0.95	0.98
Zone Total	1164.004...	36	26453	8878	1233	1250	2918	181	1000		598				360	210	570		570		
VAV-4-144											40%										
04-144-Science Class SE	990.963684	36	22244	7098	1037	1100	3057	190	880		565	Educational Sci....	10	0.18	360	178	538	1	538	0.95	0.98
Zone Total	990.963684	36	22244	7098	1037	1100	3057	190	880		565				360	178	538		538		
VAV-4-145											40%										
04-145-Science Lab	1353.199...	36	25112	7089	1171	1200	2992	186	960		634	Educational Sci....	10	0.18	360	244	604	1	604	0.95	0.98
Zone Total	1353.199...	36	25112	7089	1171	1200	2992	186	960		634				360	244	604		604		
VAV-4-146											40%										
04-146-Science Class NE	990.963684	36	22244	7021	1037	1050	4807	299	840		565	Educational Sci....	10	0.18	360	178	538	1	538	0.95	0.98
Zone Total	990.963684	36	22244	7021	1037	1050	4807	299	840		565				360	178	538		538		
VAV-4-147A											40%										
04-147-Science Lab (Chem)	1353.199...	36	28034	6812	1307	1325	6235	388	1060		634	Educational Sci....	10	0.18	360	244	604	1	604	0.95	0.98
Zone Total	1353.199...	36	28034	6812	1307	1325	6235	388	1060		634				360	244	604		604		
VAV-4-149											30%										
04-149A-Chem Storage	49.95182	0	139	0	6	50	0	0	40		15	Storage	0	0.12	0	6	6	1	6	0.40	1.54
04-149-Science Prep	217.471695	2	1901	400	89	90	0	0	72		27	Office Space	5	0.06	10	13	23	1	23	0.85	1.08
Zone Total	267.423515	2	2041	400	95	140	0	0	112		42				10	19	29		29		
[Zone Name]											30%										
04-151A-Storage N	33.670101	0	94	0	4	50	0	0	40		15	Storage	0	0.12	0	4	4	1	4	0.27	1.67
04-151-Science Hall	1627.456...	0	8073	19	376	400	4155	258	320		120	Corridors	0	0.06	0	98	98	1	98	0.81	1.12
04-C101-MOP N	24.704	0	81	0	4	50	0	0	40		15	Storage	0	0.12	0	3	3	1	3	0.20	1.74
04-M102-Science Mech	96.110573	0	315	0	15	50	0	0	40		15	Storage	0	0.12	0	12	12	1	12	0.77	1.17
04-RR101-Restrooms N	521.845276	0	2287	0	107	50	0	0	40		15	Other	0	0	0	0	0	1	0	0.00	1.94
04-UR103-WC N	79.376099	0	348	0	16	50	0	0	40		15	Other	0	0	0	0	0	1	0	0.00	1.94
Zone Total	2383.162...	0	11198	19	522	650	4155	258	520		195				0	116	116		116		
System Totals	13789.17...	290	225630	62348	10519	11050	36398	2262	8840		5264				2890	2043	4933		4933	0.98	

System Name: RTU-7

OUTSIDE AIR INTAKE INFORMATION	Vou	Vps	Table 6-3: System Vent...	Ev Appendix A Method	Use Appendix A...	Vot
	2658	2790.676301	0.3	1.00	Yes	2658
					OA %	38%

ROOM INFORMATION			AIRFLOW CALCULATIONS									VENTILATION CALCULATIONS								
Rooms and Zones	Floor Area (ft2)	Trace Population PZ	Space Cooling Sensible Load (btu/hr)	Space Cooling Latent Load (btu/hr)	Calculated Cooling Supply (CFM)	Actual Cooling Supply (CFM)	Space Heating Sensible Load (btu/hr)	Calculated Heating Supply (CFM)	Heating Supply (CFM)	Supplemental Heat (btu/hr)	Box Minimum (CFM)	Room Type	Rp CFM/Person	Ra CFM/SF	Rp*Pz	Pa*Az	Vbz	Ez	Voz	Zp	Evz
VAV-7-234											38%										
07-234-Dance S	2092	38	52211	40692	2289	2350	9270	576	1880		930	Disco/Dance...	20	0.06	760	126	886	1	886	0.95	1.00
Zone Total	2092	38	52211	40692	2289	2350	9270	576	1880		930				760	126	886		886		
VAV-7-236											38%										
07-236-Dance E	2092	38	50267	41059	2309	2350	6817	424	1880		930	Disco/Dance...	20	0.06	760	126	886	1	886	0.95	1.00
Zone Total	2092	38	50267	41059	2309	2350	6817	424	1880		930				760	126	886		886		
VAV-7-238											38%										
07-238-Dance N	2112	38	51226	40686	2288	2350	9344	581	1880		931	Disco/Dance...	20	0.06	760	127	887	1	887	0.95	1.00
Zone Total	2112	38	51226	40686	2288	2350	9344	581	1880		931				760	127	887		887		
System Totals	6296	114	153704	122436	6886	7050	25431	1581	5640		2791				2280	378	2658		2658	0.95	

BID/PERMIT SET

CONDITIONAL USE NUMBER: CU2018-0016
DESIGN REVIEW NUMBER: DR2018-0114
SITE DEVELOPMENT PERMIT NUMBER: TBD
BUILDING PERMIT NUMBER: TBD

REGISTERED PROFESSIONAL ENGINEER
84086PE
DIGITAL SIGNATURE
OREGON
MARCH 9, 2018
CHRISTOPHER NARRAMORE
EXPIRES: 12/31/2020

Digitally signed by Chris Narramore
Date: 2019.03.14 08:54:43-07'00'

MECHANICAL SCHEDULES - VENT. CALC
ACMA
BEAVERTON SCHOOL DISTRICT

M6.6
74-18109-00
03/14/2019
REVISIONS

DLR Group
Architecture Engineering Planning Interiors

© 2019, DLR Group Architecture & Engineering Inc., an Oregon corporation, ALL RIGHTS RESERVED

C:\Revit\74-18109-00_ACMA_MEP_2018_Central_smargolis.rvt
3/13/2019 10:09:40 PM

System Name: RTU-5

OUTSIDE AIR INTAKE INFORMATION	Vou	Vps	Table 6-3: System Vent...	Ev Appendix A Method	Use Appendix A...	Vot
	2653	3168.254236	0.3	0.89	Yes	2998
					OA %	38%

ROOM INFORMATION			AIRFLOW CALCULATIONS									VENTILATION CALCULATIONS									
Rooms and Zones	Floor Area (ft2)	Trace Population PZ	Space Cooling Sensible Load (btu/hr)	Space Cooling Latent Load (btu/hr)	Calculated Cooling Supply (CFM)	Actual Cooling Supply (CFM)	Space Heating Sensible Load (btu/hr)	Calculated Heating Supply (CFM)	Heating Supply (CFM)	Supplemental Heat (btu/hr)	Box Minimum (CFM)	Room Type	Rp CFM/Person	Ra CFM/SF	Rp*Pz	Pa*Az	Vbz	Ez	Voz	Zp	Evz
VAV-5-201											30%										
05-201-Photo	1025	25	22790	5030	1062	1100	5844	363	920		456	Art Classroom	10	0.18	250	185	435	1	435	0.95	0.89
Zone Total	1025	25	22790	5030	1062	1100	5844	363	920		456				250	185	435		435		
VAV-5-203											30%										
05-203-Dark Room	628	25	16864	6243	786	800	2333	145	640		381	Art Classroom	10	0.18	250	113	363	1	363	0.95	0.89
Zone Total	628	25	16864	6243	786	800	2333	145	640		381				250	113	363		363		
VAV-5-205											30%										
05-205A-Office1	94	4	3582	768	167	175	964	60	140		53	Office Space	5	0.06	20	6	26	1	26	0.49	1.35
05-205B-Office2	94	4	3582	768	167	175	964	60	140		53	Office Space	5	0.06	20	6	26	1	26	0.49	1.35
05-205C-Dbl Office	133	5	2518	1000	117	125	200	12	100		38	Office Space	5	0.06	25	8	33	1	33	0.88	0.96
05-205D-Conference	133	8	3312	1600	154	175	200	12	140		53	Conference/Mee...	5	0.06	40	8	48	1	48	0.91	0.92
05-205E-Storage	17	0	92	0	4	50	25	2	40		15	Storage	0	0.12	0	2	2	1	2	0.13	1.70
05-205-SPED	519	18	14079	3572	656	675	2488	155	540		203	Office Space	5	0.06	90	31	121	1	121	0.60	1.24
Zone Total	990	39	27165	7708	1266	1375	4842	301	1100		413				195	60	255		255		
VAV-5-207											30%										
05-207-Classroom W	991	36	27678	7137	1290	1325	5138	319	1060		503	Classroom (>9yrs)	10	0.12	360	119	479	1	479	0.95	0.89
Zone Total	991	36	27678	7137	1290	1325	5138	319	1060		503				360	119	479		479		
VAV-5-209											30%										
05-209-Classroom SW	991	36	28390	7044	1323	1350	7708	479	1080		503	Classroom (>9yrs)	10	0.12	360	119	479	1	479	0.95	0.89
Zone Total	991	36	28390	7044	1323	1350	7708	479	1080		503				360	119	479		479		
VAV-5-210											50%										
05-206-SW Hall	399	0	6689	0	312	350	1191	74	280		175	Corridors	0	0.06	0	24	24	1	24	0.14	1.70
05-210A-Small Group	187	10	4343	2000	202	225	282	18	180		113	Office Space	5	0.06	50	11	61	1	61	0.54	1.29
05-210-Extended Learning S	1222	36	23530	7200	1097	1100	1837	114	880		550	Classroom (>9yrs)	10	0.12	360	147	507	1	507	0.92	0.92
Zone Total	1808	46	34562	9200	1611	1675	3311	206	1340		838				410	182	592		592		
VAV-5-220											30%										
05-200/221-Circulation Gallery	843	0	4638	0	216	250	1268	79	200		75	Corridors	0	0.06	0	51	51	1	51	0.67	1.16
Zone Total	843	0	4638	0	216	250	1268	79	200		75				0	51	51		51		
System Totals	7277	207	162087	42363	7556	7875	30444	1892	6340		3168				1825	828	2653		2653	0.95	

System Name: RTU-6

OUTSIDE AIR INTAKE INFORMATION	Vou	Vps	Table 6-3: System Vent...	Ev Appendix A Method	Use Appendix A...	Vot
	2192	2414.397002	0.3	0.96	Yes	2294
					OA %	36%

ROOM INFORMATION			AIRFLOW CALCULATIONS									VENTILATION CALCULATIONS									
Rooms and Zones	Floor Area (ft2)	Trace Population PZ	Space Cooling Sensible Load (btu/hr)	Space Cooling Latent Load (btu/hr)	Calculated Cooling Supply (CFM)	Actual Cooling Supply (CFM)	Space Heating Sensible Load (btu/hr)	Calculated Heating Supply (CFM)	Heating Supply (CFM)	Supplemental Heat (btu/hr)	Box Minimum (CFM)	Room Type	Rp CFM/Person	Ra CFM/SF	Rp*Pz	Pa*Az	Vbz	Ez	Voz	Zp	Evz
VAV-6-211											30%										
06-211-Classroom S	984	36	28792	7106	1342	1375	6658	414	1100		502	Classroom...	10	0.12	360	118	478	1	478	0.95	0.96
Zone Total	984	36	28792	7106	1342	1375	6658	414	1100		502				360	118	478		478		
VAV-6-212											30%										
06-212-Classroom SE	999	36	26496	7217	1235	1250	8319	517	1000		504	Classroom...	10	0.12	360	120	480	1	480	0.95	0.96
Zone Total	999	36	26496	7217	1235	1250	8319	517	1000		504				360	120	480		480		
VAV-6-214											30%										
06-214-Classroom E4	999	36	25801	7122	1203	1250	5151	320	1000		504	Classroom...	10	0.12	360	120	480	1	480	0.95	0.96
Zone Total	999	36	25801	7122	1203	1250	5151	320	1000		504				360	120	480		480		
VAV-6-216											30%										
06-216-Classroom E3	999	36	25280	7208	1179	1200	4916	306	960		504	Classroom...	10	0.12	360	120	480	1	480	0.95	0.96
Zone Total	999	36	25280	7208	1179	1200	4916	306	960		504				360	120	480		480		
VAV-6-217											30%										
06-217-Dance Office-W/D	206	3	2707	600	126	130	310	19	104		39	Office Space	5	0.06	15	12	27	1	27	0.70	1.21
Zone Total	206	3	2707	600	126	130	310	19	104		39				15	12	27		27		
VAV-6-220											30%										
06-218/220-Changing	598	36	13848	7186	646	650	2154	134	520		227	Office Space	5	0.06	180	36	216	1	216	0.95	0.96
Zone Total	598	36	13848	7186	646	650	2154	134	520		227				180	36	216		216		
VAV-6-221											30%										
06-221-SE Hall	509	0	7267	0	339	400	1357	84	320		120	Corridors	0	0.06	0	31	31	1	31	0.25	1.65
06-UR200-WC S	77	0	576	0	27	50	116	7	40		15	Other	0	0	0	0	0	1	0	0.00	1.91
Zone Total	586	0	7843	0	366	450	1473	92	360		135				0	31	31		31		
System Totals	5372	183	130768	36439	6096	6305	28980	1801	5044		2414				1635	557	2192		2192	0.95	

BID/PERMIT SET

CONDITIONAL USE NUMBER: CU2018-0016
DESIGN REVIEW NUMBER: DR2018-0114
SITE DEVELOPMENT PERMIT NUMBER: TBD
BUILDING PERMIT NUMBER: TBD

REGISTERED PROFESSIONAL ENGINEER
84086PE
DIGITAL SIGNATURE
OREGON
MARCH 9, 2019
CHRISTOPHER NARRAMORE
EXPIRES: 12/31/2020

Digitally signed by Chris Narramore
Date: 2019.03.14 08:54:54-07'00'

MECHANICAL SCHEDULES - VENT. CALC

ACMA
BEAVERTON SCHOOL DISTRICT

M6.7
74-18109-00
03/14/2019
REVISIONS

DLR Group
Architecture Engineering Planning Interiors
©2019, DLR Group Architecture & Engineering Inc., an Oregon corporation, ALL RIGHTS RESERVED

C:\Revit\74-18109-00_ACMA_MEP_2018_Central_smargolis.rvt
3/14/2019 8:44:19 AM

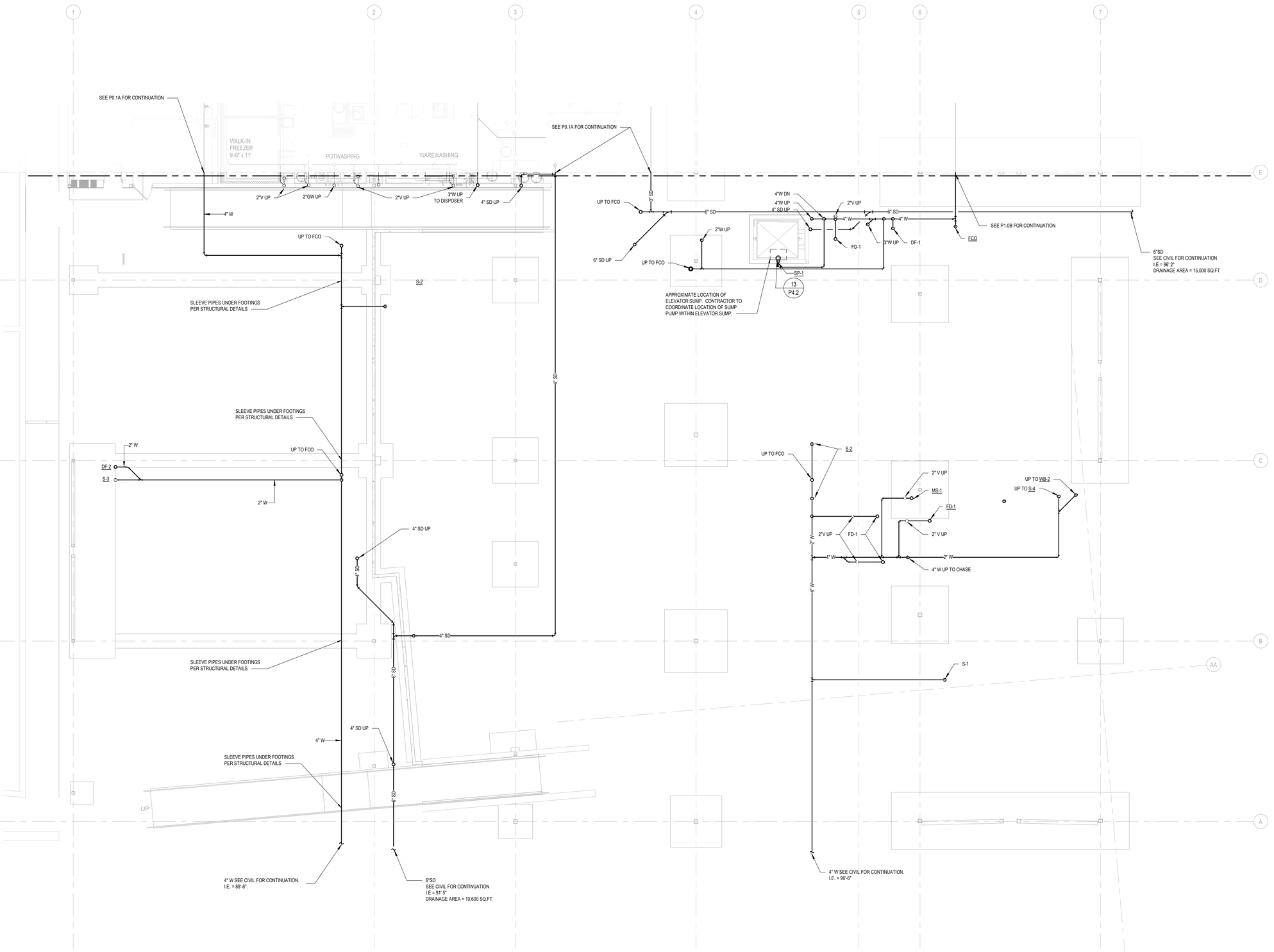

PLUMBING PLAN, UNDERGROUND - AREA A

SCALE: 1/8" = 1'-0"

NORTH

C:\Revit\74-18109-00_ACMA_MEP_2018_Central_smargolis.rvt
3/13/2019 9:48:22 PM

BID/PERMIT SET

CONDITIONAL USE NUMBER: CU2018-0016
DESIGN REVIEW NUMBER: DR2018-0114
SITE DEVELOPMENT PERMIT NUMBER: TBD
BUILDING PERMIT NUMBER: TBD

REGISTERED PROFESSIONAL ENGINEER
84086PE
DIGITAL SIGNATURE
OREGON
MARCH 9, 2019
CHRISTOPHER NARRAMORE
EXPIRES: 12/31/2020

Digitally signed by Chris Narramore
Date: 2019.03.14 08:56:06-07'00'

PLUMBING PLAN, UNDERGROUND - AREA A
ACMA
BEAVERTON SCHOOL DISTRICT

P1.0A
74-18109-00
03/14/2019
REVISIONS

KEY PLAN

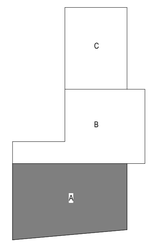

NORTH

DLR Group
Architecture Engineering Planning Interiors

©2019, DLR Group Architecture & Engineering Inc., an Oregon corporation, ALL RIGHTS RESERVED

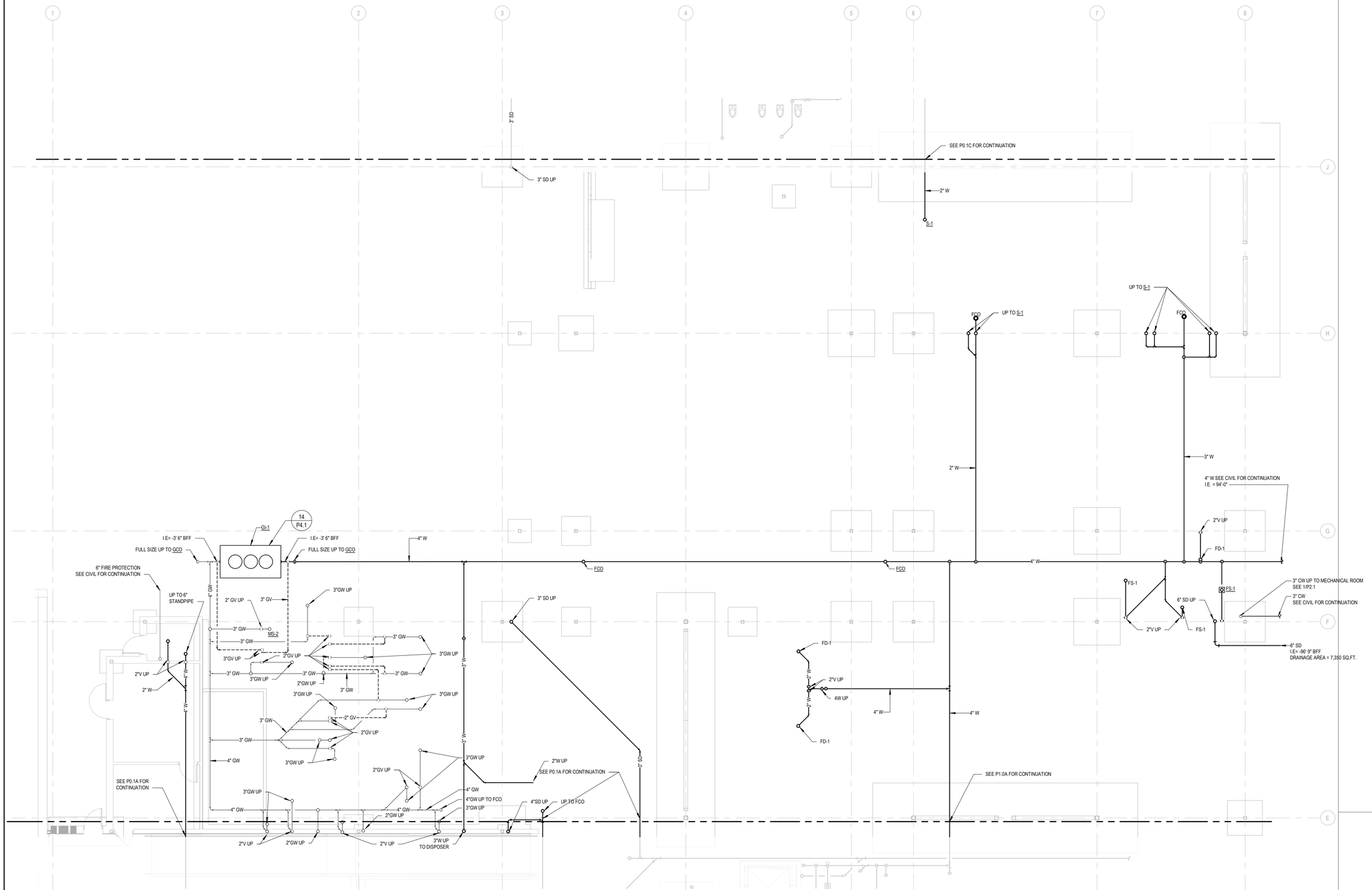

PLUMBING PLAN, UNDERGROUND - AREA B

SCALE: 1/8" = 1'-0"

NORTH

C:\Revit\74-18109-00_ACMA_MEP_2018_Central_smargolis.rvt
3/13/2019 9:41:44 PM

BID/PERMIT SET

CONDITIONAL USE NUMBER: CU2018-0016
DESIGN REVIEW NUMBER: DR2018-0114
SITE DEVELOPMENT PERMIT NUMBER: TBD
BUILDING PERMIT NUMBER: TBD

REGISTERED PROFESSIONAL ENGINEER
84086PE
DIGITAL SIGNATURE
OREGON
MARCH 9, 2010
CHRISTOPHER NARRAMORE

EXPIRES: 12/31/2020

Digitally signed by Chris Narramore
Date: 2019.03.14 08:55:26 -07'00'

PLUMBING PLAN, UNDERGROUND - AREA B
ACMA
BEAVERTON SCHOOL DISTRICT

P1.0B
74-18109-00
03/14/2019
REVISIONS

KEY PLAN

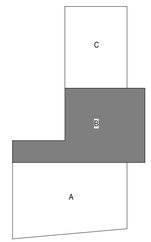

DLR Group
Architecture Engineering Planning Interiors

©2019, DLR Group Architecture & Engineering Inc., an Oregon corporation, ALL RIGHTS RESERVED

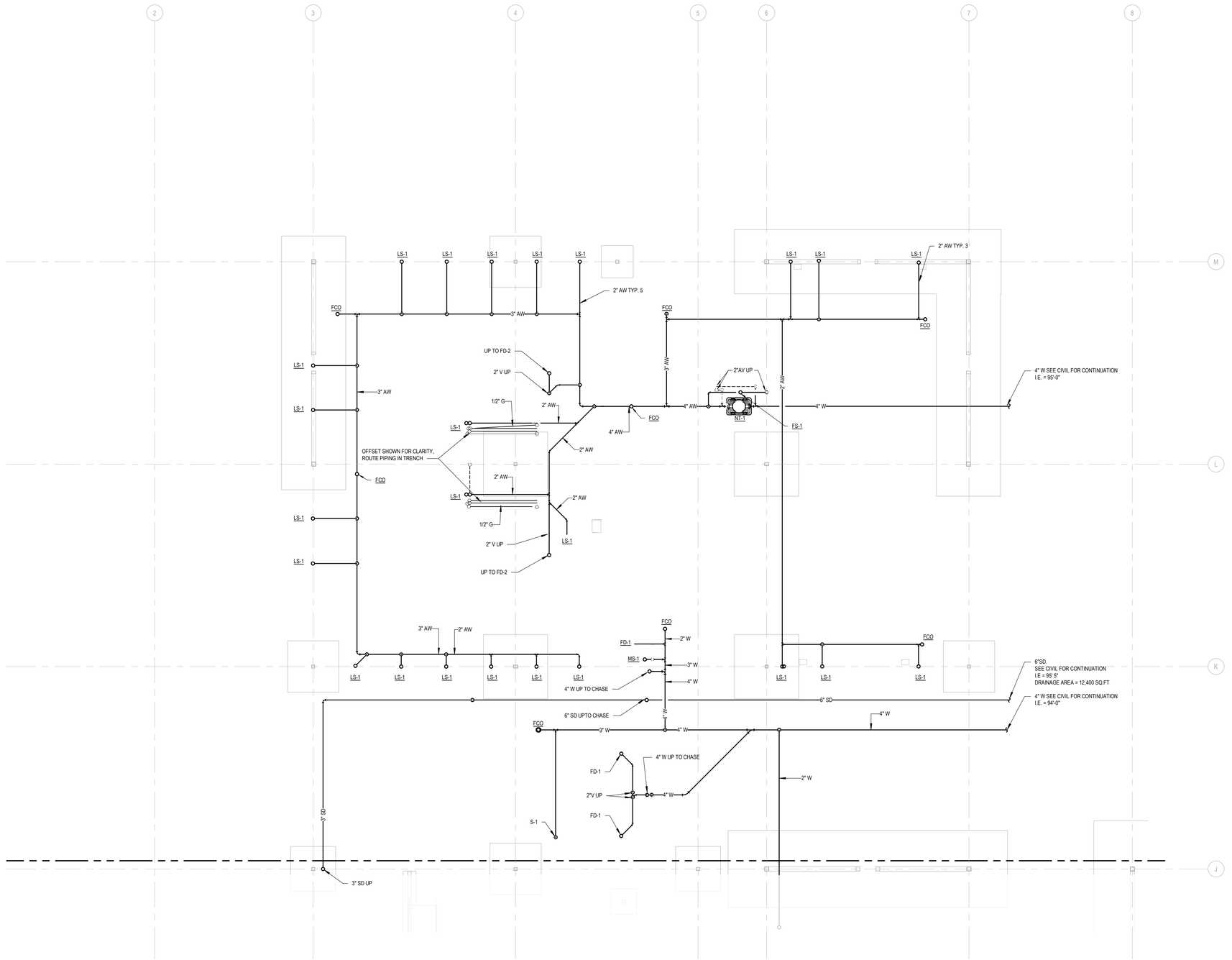

PLUMBING PLAN, UNDERGROUND - AREA C

SCALE: 1/8" = 1'-0"

NORTH

C:\Revit\74-18109-00_ACMA_MEP_2018_Central_smargolis.rvt
3/13/2019 9:41:49 PM

BID/PERMIT SET

CONDITIONAL USE NUMBER: CU2018-0016
DESIGN REVIEW NUMBER: DR2018-0114
SITE DEVELOPMENT PERMIT NUMBER: TBD
BUILDING PERMIT NUMBER: TBD

REGISTERED PROFESSIONAL ENGINEER
84086PE
DIGITAL SIGNATURE
OREGON
MARCH 9, 2019
CHRISTOPHER NARRAMORE

EXPIRES: 12/31/2020

Digitally signed by Chris Narramore
Date: 2019.03.14 08:58:37-07'00'

PLUMBING PLAN, UNDERGROUND - AREA C
ACMA
BEAVERTON SCHOOL DISTRICT

P1.0C
74-18109-00
03/14/2019
REVISIONS

KEY PLAN

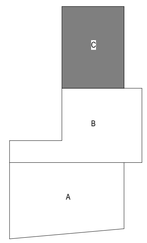

DLR Group
Architecture Engineering Planning Interiors

©2019, DLR Group Architecture & Engineering Inc., an Oregon corporation, ALL RIGHTS RESERVED

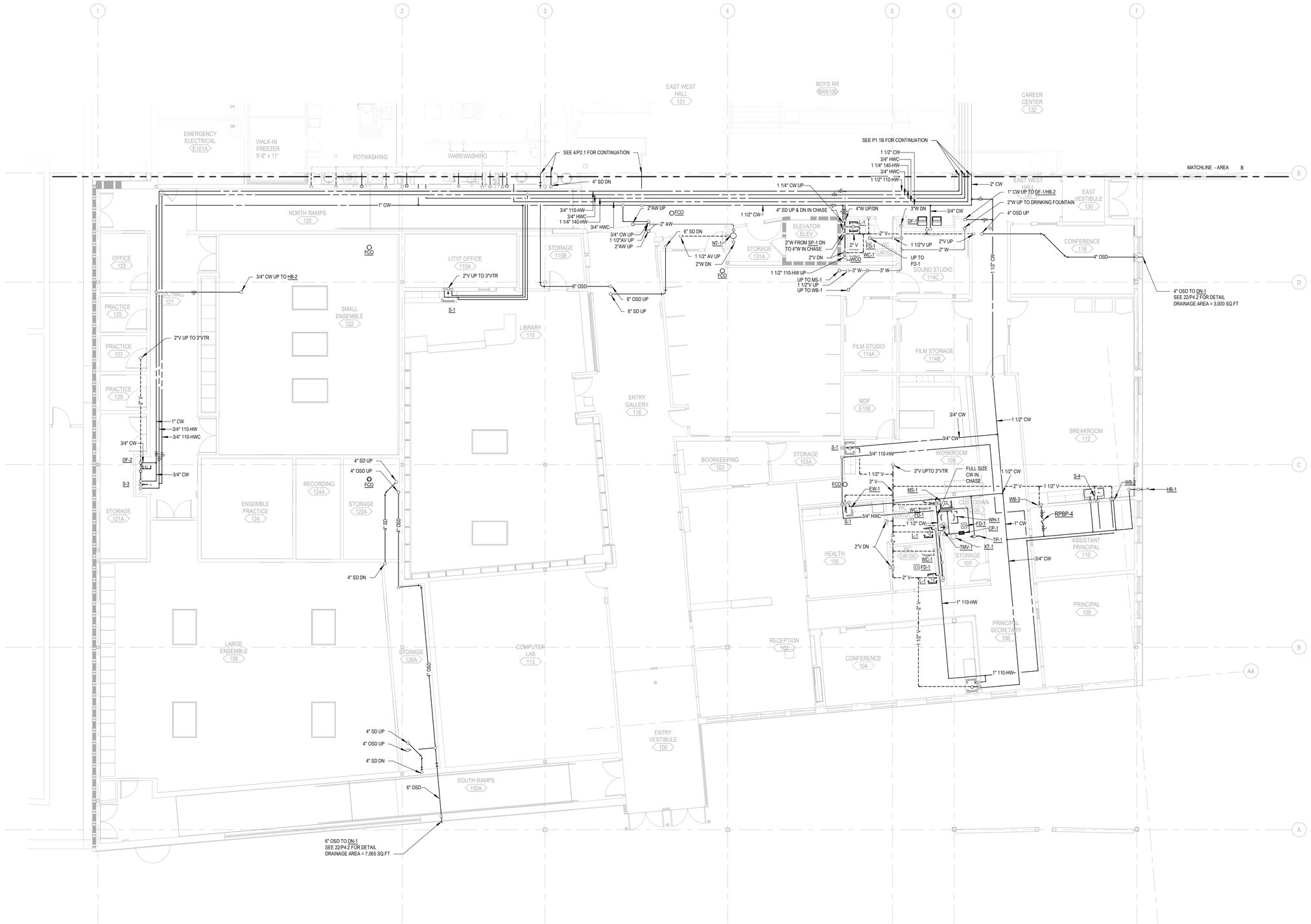

PLUMBING PLAN, FIRST LEVEL - AREA A

SCALE: 1/8" = 1'-0"

NORTH

C:\Revit\74-18109-00_ACMA_MEP_2018_Central_smargolis.rvt
3/13/2019 9:41:55 PM

BID/PERMIT SET

CONDITIONAL USE NUMBER: CU2018-0016
DESIGN REVIEW NUMBER: DR2018-0114
SITE DEVELOPMENT PERMIT NUMBER: TBD
BUILDING PERMIT NUMBER: TBD

REGISTERED PROFESSIONAL ENGINEER
84086PE
DIGITAL SIGNATURE
OREGON
MARCH 9, 2018
CHRISTOPHER NARRAMORE

EXPIRES: 12/31/2020

Digitally signed by Chris Narramore
Date: 2019.03.14 08:55:48 -07'00'

PLUMBING PLAN, LEVEL 1 - AREA A
ACMA
BEAVERTON SCHOOL DISTRICT

P1.1A
74-18109-00
03/14/2019
REVISIONS

KEY PLAN

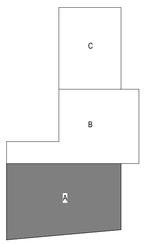

DLR Group
Architecture Engineering Planning Interiors

©2019, DLR Group Architecture & Engineering Inc., an Oregon corporation, ALL RIGHTS RESERVED

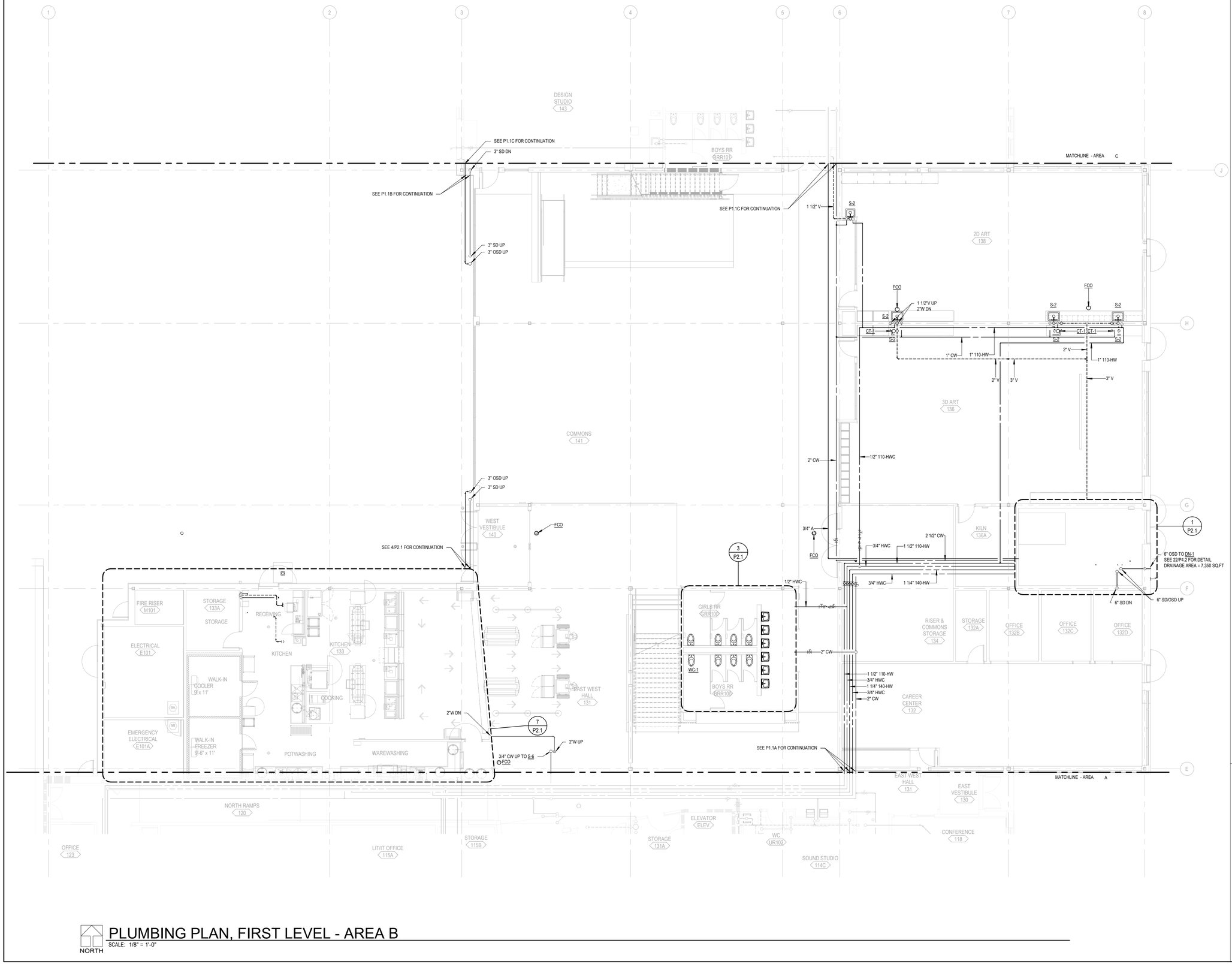

PLUMBING PLAN, FIRST LEVEL - AREA B

SCALE: 1/8" = 1'-0"

NORTH

BID/PERMIT SET

CONDITIONAL USE NUMBER: CU2018-0016
DESIGN REVIEW NUMBER: DR2018-8114
SITE DEVELOPMENT PERMIT NUMBER: TBD
BUILDING PERMIT NUMBER: TBD

REGISTERED PROFESSIONAL ENGINEER
84086PE
DIGITAL SIGNATURE
OREGON
MARCH 9, 2010
CHRISTOPHER NARRAMORE
EXPIRES: 12/31/2020
Digitally signed by Chris Narramore
Date: 2019.03.14 08:55:57 -07'00'

PLUMBING PLAN, LEVEL 1 - AREA B
ACMA
BEAVERTON SCHOOL DISTRICT

P1.1B
74-18109-00
03/14/2019
REVISIONS

KEY PLAN

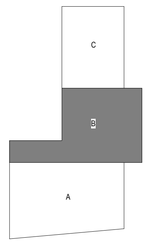

DLR Group
Architecture Engineering Planning Interiors

©2019, DLR Group Architecture & Engineering Inc., an Oregon corporation, ALL RIGHTS RESERVED

C:\Revit\74-18109-00_ACMA_MEP_2018_Central_smargolis.rvt
3/13/2019 9:42:00 PM

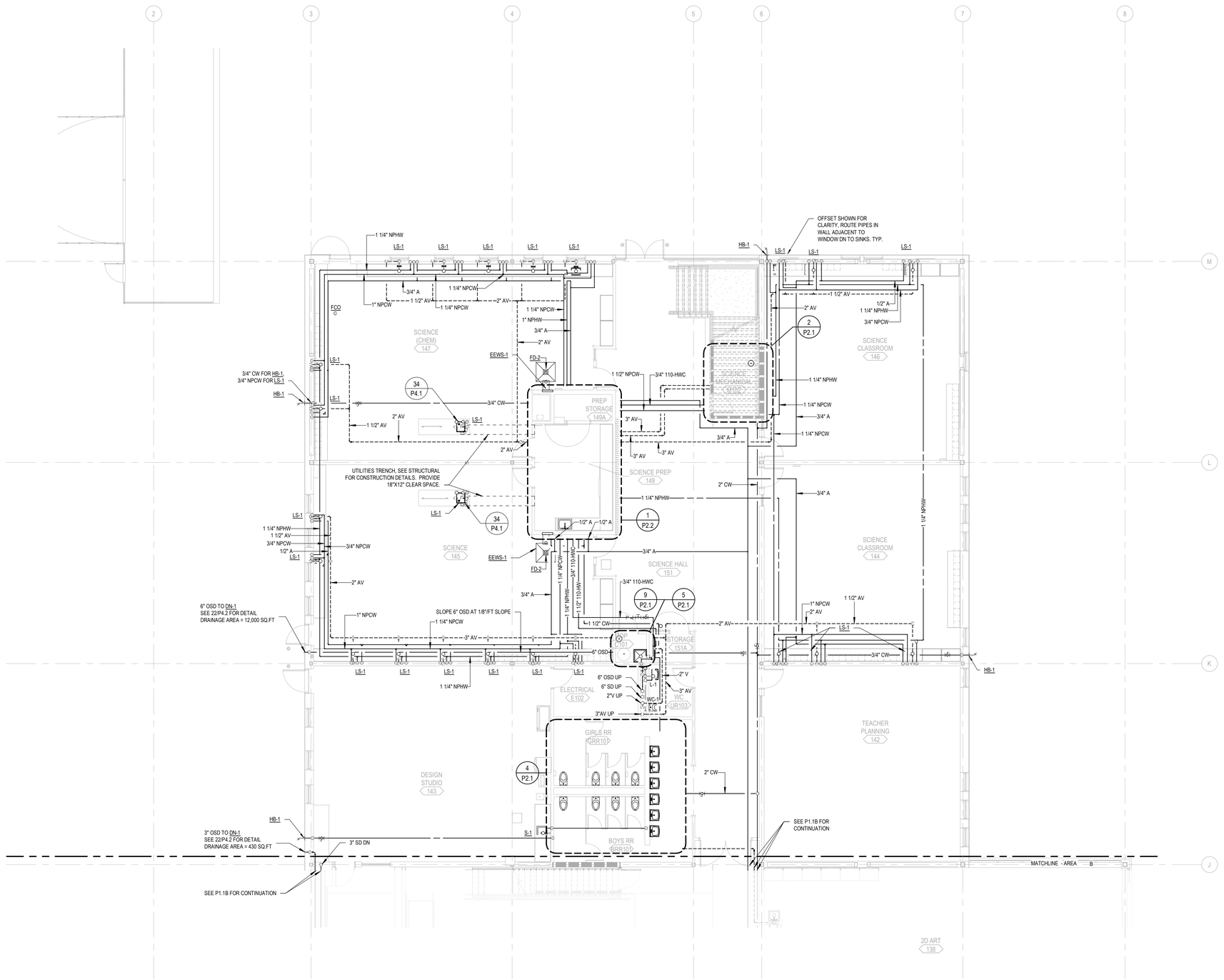

PLUMBING PLAN, FIRST LEVEL - AREA C

SCALE: 1/8" = 1'-0"

NORTH

BID/PERMIT SET

CONDITIONAL USE NUMBER: CU2018-0016
DESIGN REVIEW NUMBER: DR2018-0114
SITE DEVELOPMENT PERMIT NUMBER: TBD
BUILDING PERMIT NUMBER: TBD

REGISTERED PROFESSIONAL ENGINEER
84086PE
DIGITAL SIGNATURE
OREGON
MARCH 9, 2019
CHRISTOPHER NARRAMORE

EXPIRES: 12/31/2020

Digitally signed by Chris Narramore
Date: 2019.03.14 08:56:07-07'00'

PLUMBING PLAN, LEVEL 1 - AREA C
ACMA
BEAVERTON SCHOOL DISTRICT

P1.1C
74-18109-00
03/14/2019
REVISIONS

KEY PLAN

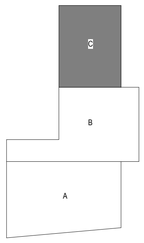

DLR Group
Architecture Engineering Planning Interiors

©2019, DLR Group Architecture & Engineering Inc., an Oregon corporation, ALL RIGHTS RESERVED

C:\Revit\74-18109-00_ACMA_MEP_2018_Central_smargolis.rvt
3/13/2019 9:42:06 PM

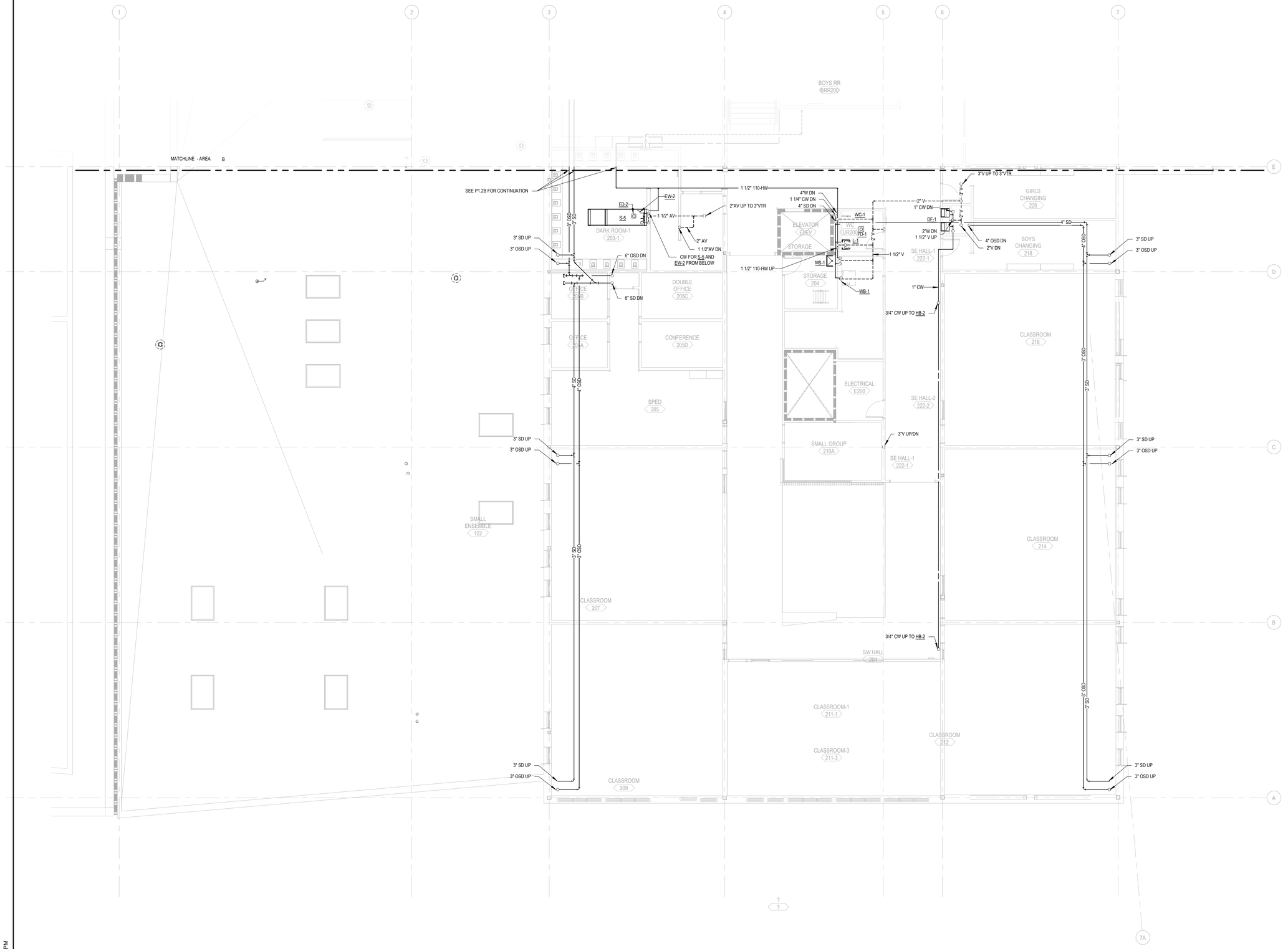

PLUMBING PLAN, SECOND LEVEL - AREA A

SCALE: 1/8" = 1'-0"

NORTH

C:\Revit\74-18109-00_ACMA_MEP_2018_Central_smargolis.rvt
3/13/2019 9:42:10 PM

BID/PERMIT SET

CONDITIONAL USE NUMBER: CU2018-0016
DESIGN REVIEW NUMBER: DR2018-0114
SITE DEVELOPMENT PERMIT NUMBER: TBD
BUILDING PERMIT NUMBER: TBD

REGISTERED PROFESSIONAL ENGINEER
84086PE
DIGITAL SIGNATURE
OREGON
MARCH 9, 2019
CHRISTOPHER NARRAMORE

EXPIRES: 12/31/2020

Digitally signed by Chris Narramore
Date: 2019.03.14 08:56:23-07'00'

PLUMBING PLAN, LEVEL 2 - AREA A
ACMA
BEAVERTON SCHOOL DISTRICT

P1.2A
74-18109-00
03/14/2019
REVISIONS

KEY PLAN

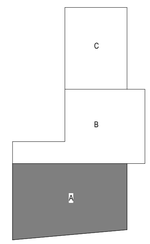

NORTH

DLR Group
Architecture Engineering Planning Interiors

© 2019, DLR Group Architecture & Engineering Inc., an Oregon corporation, ALL RIGHTS RESERVED

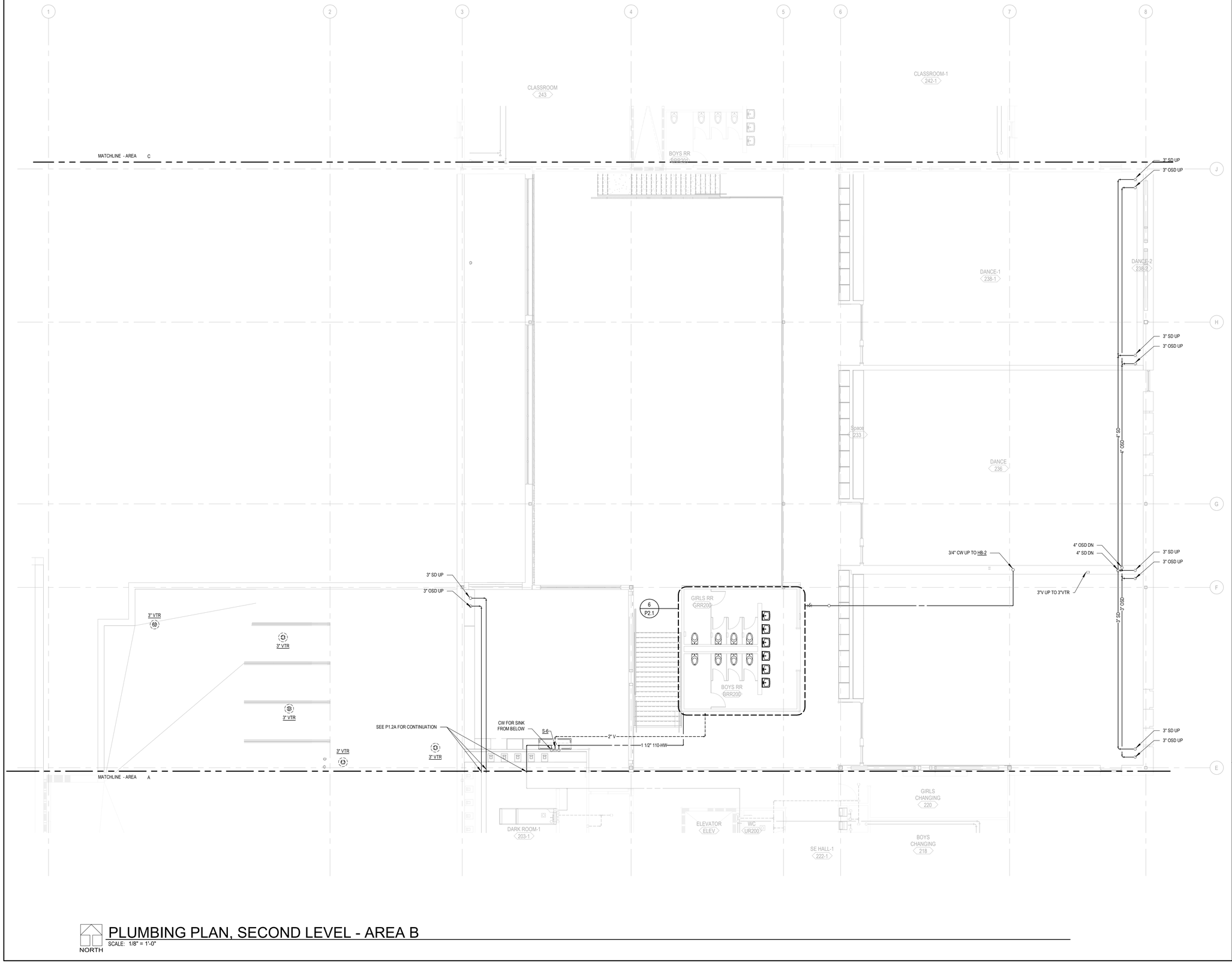

PLUMBING PLAN, SECOND LEVEL - AREA B

SCALE: 1/8" = 1'-0"

NORTH

C:\Revit\74-18109-00_ACMA_MEP_2018_Central_smargolis.rvt
3/13/2019 9:42:14 PM

BID/PERMIT SET

CONDITIONAL USE NUMBER: CU2018-0016
DESIGN REVIEW NUMBER: DR2018-0114
SITE DEVELOPMENT PERMIT NUMBER: TBD
BUILDING PERMIT NUMBER: TBD

REGISTERED PROFESSIONAL ENGINEER
84086PE
DIGITAL SIGNATURE
OREGON
MARCH 9, 2010
CHRISTOPHER NARRAMORE

EXPIRES: 12/31/2020

Digitally signed by Chris Narramore
Date: 2019.03.14 08:56:34-07'00'

PLUMBING PLAN, LEVEL 2 - AREA B
ACMA
BEAVERTON SCHOOL DISTRICT

P1.2B
74-18109-00
03/14/2019
REVISIONS

KEY PLAN

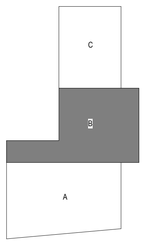

NORTH

DLR Group
Architecture Engineering Planning Interiors

© 2019, DLR Group Architecture & Engineering inc., an Oregon corporation, ALL RIGHTS RESERVED

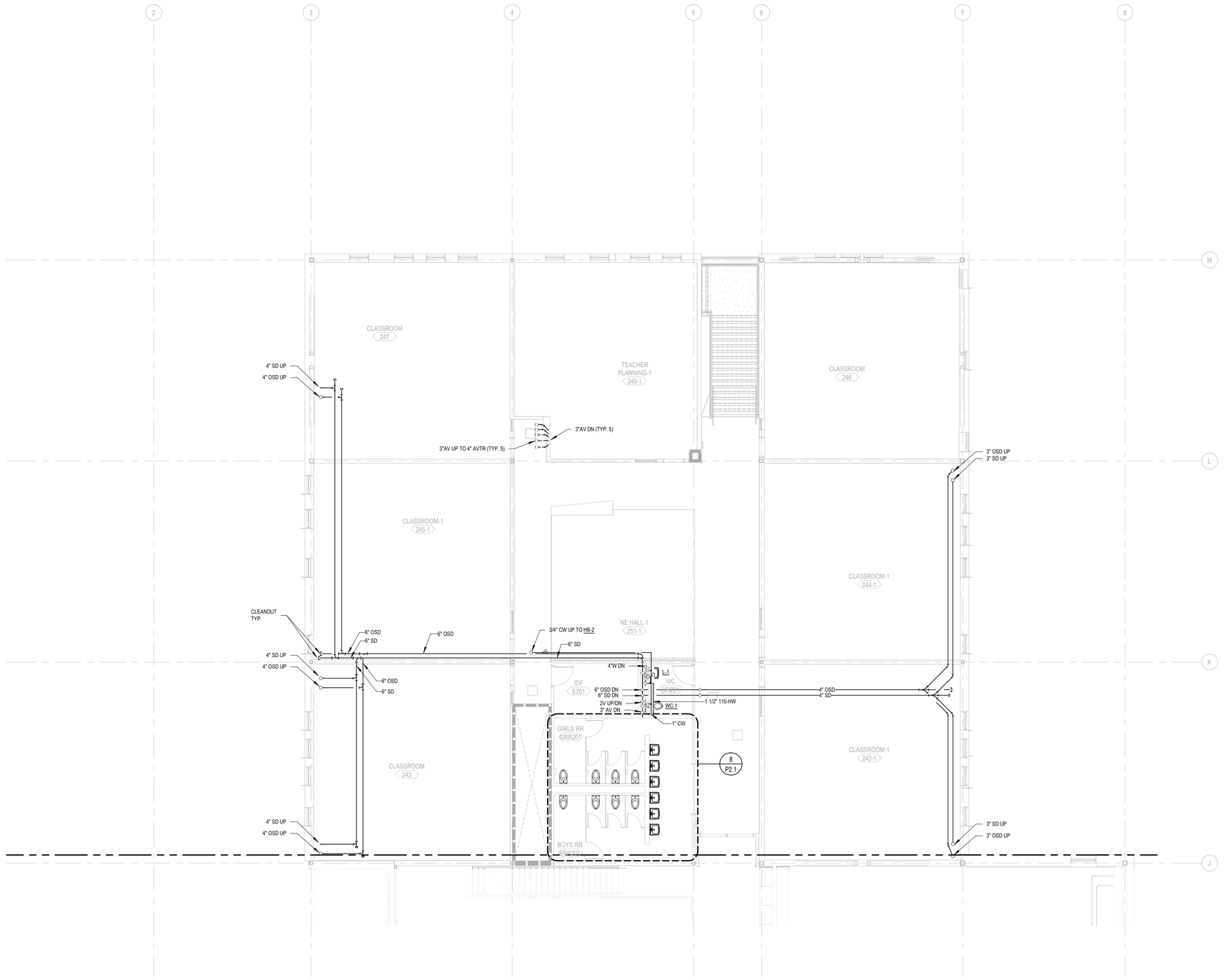

PLUMBING PLAN, SECOND LEVEL - AREA C

NORTH

SCALE: 1/8" = 1'-0"

C:\Revit\74-18109-00_ACMA_MEP_2018_Central_smangolis.rvt
3/13/2019 9:42:18 PM

BID/PERMIT SET

CONDITIONAL USE NUMBER: CU2018-0016
DESIGN REVIEW NUMBER: DR2018-0114
SITE DEVELOPMENT PERMIT NUMBER: TBD
BUILDING PERMIT NUMBER: TBD

REGISTERED PROFESSIONAL ENGINEER
84086PE
DIGITAL SIGNATURE
OREGON
MARCH 9, 2019
CHRISTOPHER NARRAMORE

EXPIRES: 12/31/2020

Digitally signed by Chris Narramore
Date: 2019.03.14 08:56:46 -07'00'

PLUMBING PLAN, LEVEL 2 - AREA C
ACMA
BEAVERTON SCHOOL DISTRICT

P1.2C
74-18109-00
03/14/2019
REVISIONS

KEY PLAN

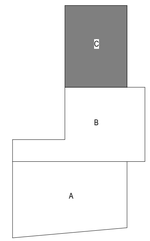

DLR Group
Architecture Engineering Planning Interiors

©2019, DLR Group Architecture & Engineering Inc., an Oregon corporation, ALL RIGHTS RESERVED



NORTH

PLUMBING PLAN, ROOF PLAN - OVERALL

SCALE: 1" = 20'-0"

KEY PLAN

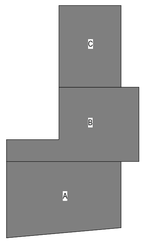

NORTH

BID/PERMIT SET

CONDITIONAL USE NUMBER: CU2018-0016
DESIGN REVIEW NUMBER: DR2018-0114
SITE DEVELOPMENT PERMIT NUMBER: TBD
BUILDING PERMIT NUMBER: TBD

REGISTERED PROFESSIONAL ENGINEER
84086PE
DIGITAL SIGNATURE
OREGON
MARCH 9, 2010
CHRISTOPHER NARRAMORE

EXPIRES: 12/31/2020

Digitally signed by Chris Narramore
Date: 2019.03.14 08:56:59-07'00'

PLUMBING PLAN, ROOF PLAN - OVERALL
ACMA
BEAVERTON SCHOOL DISTRICT

P1.3
74-18109-00
03/14/2019
REVISIONS

DLR Group
Architecture Engineering Planning Interiors

©2019, DLR Group Architecture & Engineering inc., an Oregon corporation, ALL RIGHTS RESERVED

C:\Revit\74-18109-00_ACMA_MEP_2018_Central_smargolis.rvt
3/13/2019 9:42:20 PM

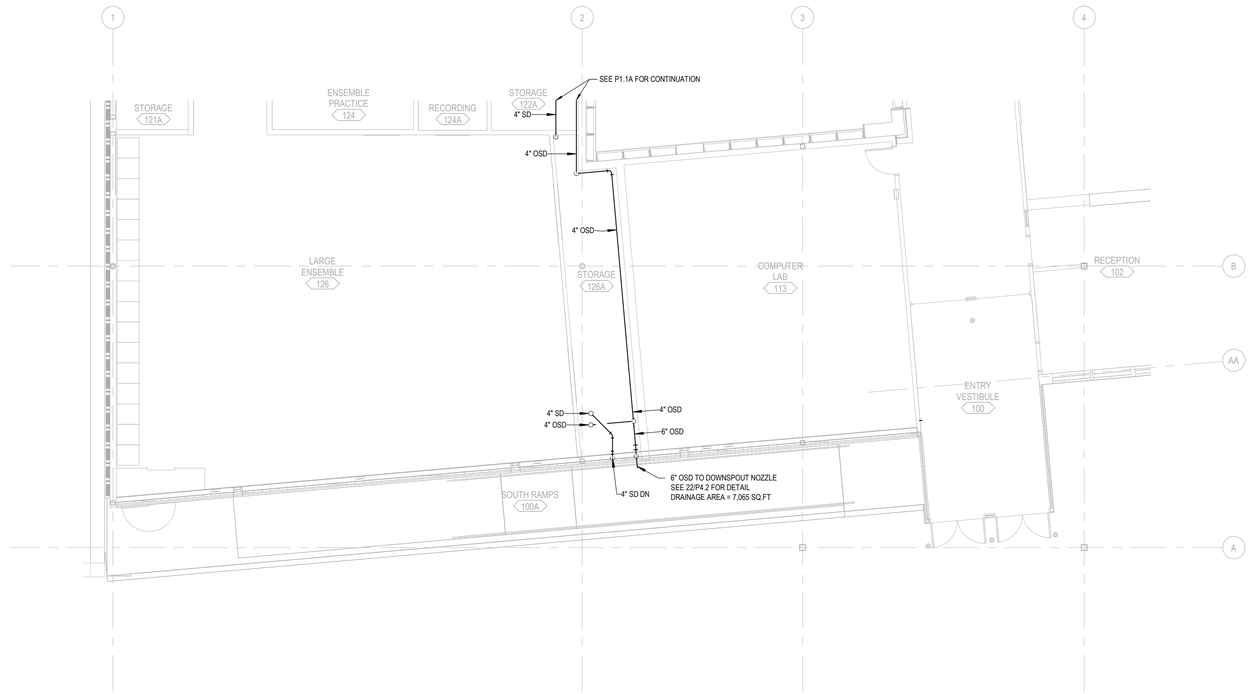

PLUMBING PLAN, FIRST LEVEL - AREA A - RAMP DEDUCTIVE ALTERNATE

SCALE: 1/8" = 1'-0"

NORTH

BID/PERMIT SET

CONDITIONAL USE NUMBER: CU2018-0016
DESIGN REVIEW NUMBER: DR2018-0114
SITE DEVELOPMENT PERMIT NUMBER: TBD
BUILDING PERMIT NUMBER: TBD

REGISTERED PROFESSIONAL ENGINEER
84086PE
DIGITAL SIGNATURE
OREGON
MARCH 9, 2018
CHRISTOPHER NARRAMORE

EXPIRES: 12/31/2020

Digitally signed by Chris Narramore
Date: 2019.03.14 08:57:10-07'00'

PLUMBING - RAMP DEDUCTIVE ALTERNATE
ACMA
BEAVERTON SCHOOL DISTRICT

P1.4
74-18109-00
03/14/2019
REVISIONS

KEY PLAN

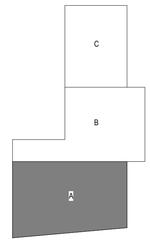

NORTH

DLR Group
Architecture Engineering Planning Interiors

©2019, DLR Group Architecture & Engineering Inc., an Oregon corporation, ALL RIGHTS RESERVED

C:\Revit\74-18109-00_ACMA_MEP_2018_Central_smargolis.rvt
3/13/2019 9:42:21 PM

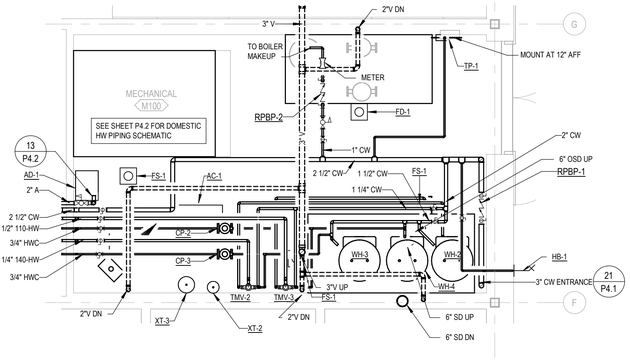

1 P2.1 MECHANICAL ROOM PLUMBING ENLARGED PLAN
SCALE: 1/4" = 1'-0"

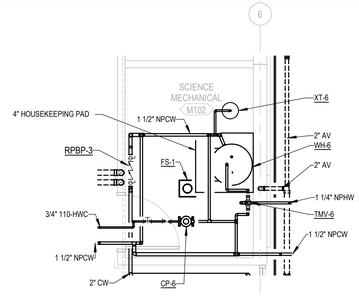

2 P2.1 AREA C MECHANICAL ROOM ENLARGED PLAN
SCALE: 1/4" = 1'-0"

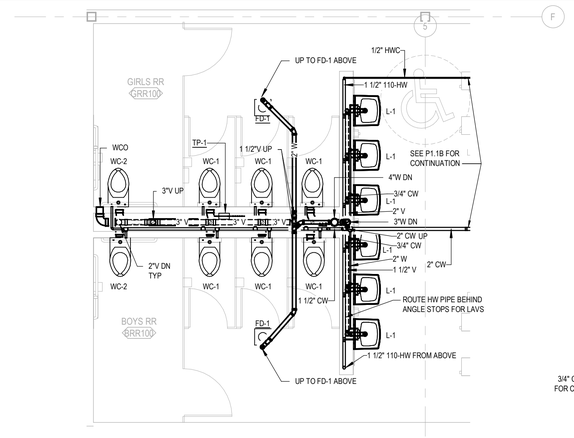

3 P2.1 RESTROOMS GRR100/BRR100 - ENLARGED PLUMBING PLAN
SCALE: 1/4" = 1'-0"

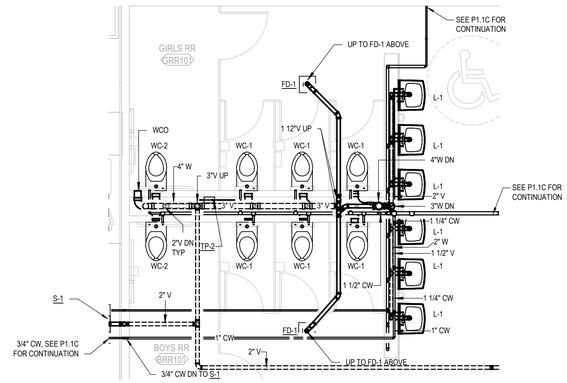

4 P2.1 RESTROOMS GRR101/BRR101 - ENLARGED PLUMBING PLAN
SCALE: 1/4" = 1'-0"

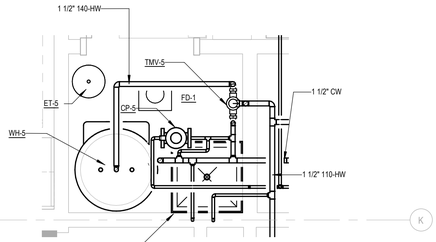

9 P2.1 NORTH CORE JANITORS CLOSET - WH-5 HW/CW
NO SCALE

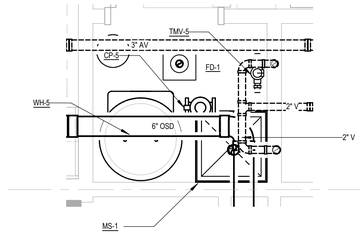

5 P2.1 NORTH CORE JANITORS CLOSET - WH-5 OSD/W/V/AV
SCALE: 1/2" = 1'-0"

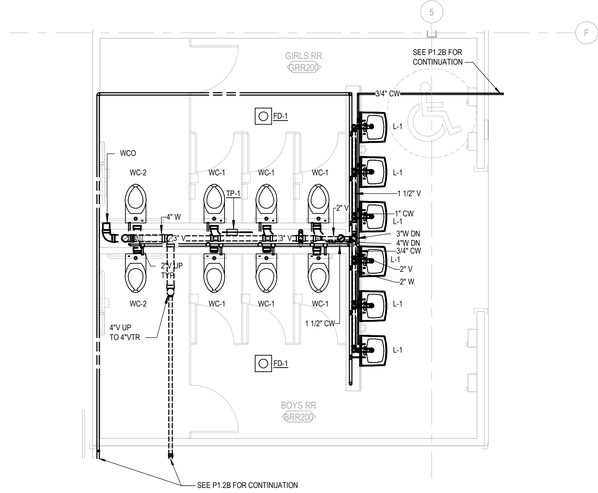

6 P2.1 RESTROOMS GRR200/BRR200 - ENLARGED PLUMBING PLAN
SCALE: 1/4" = 1'-0"

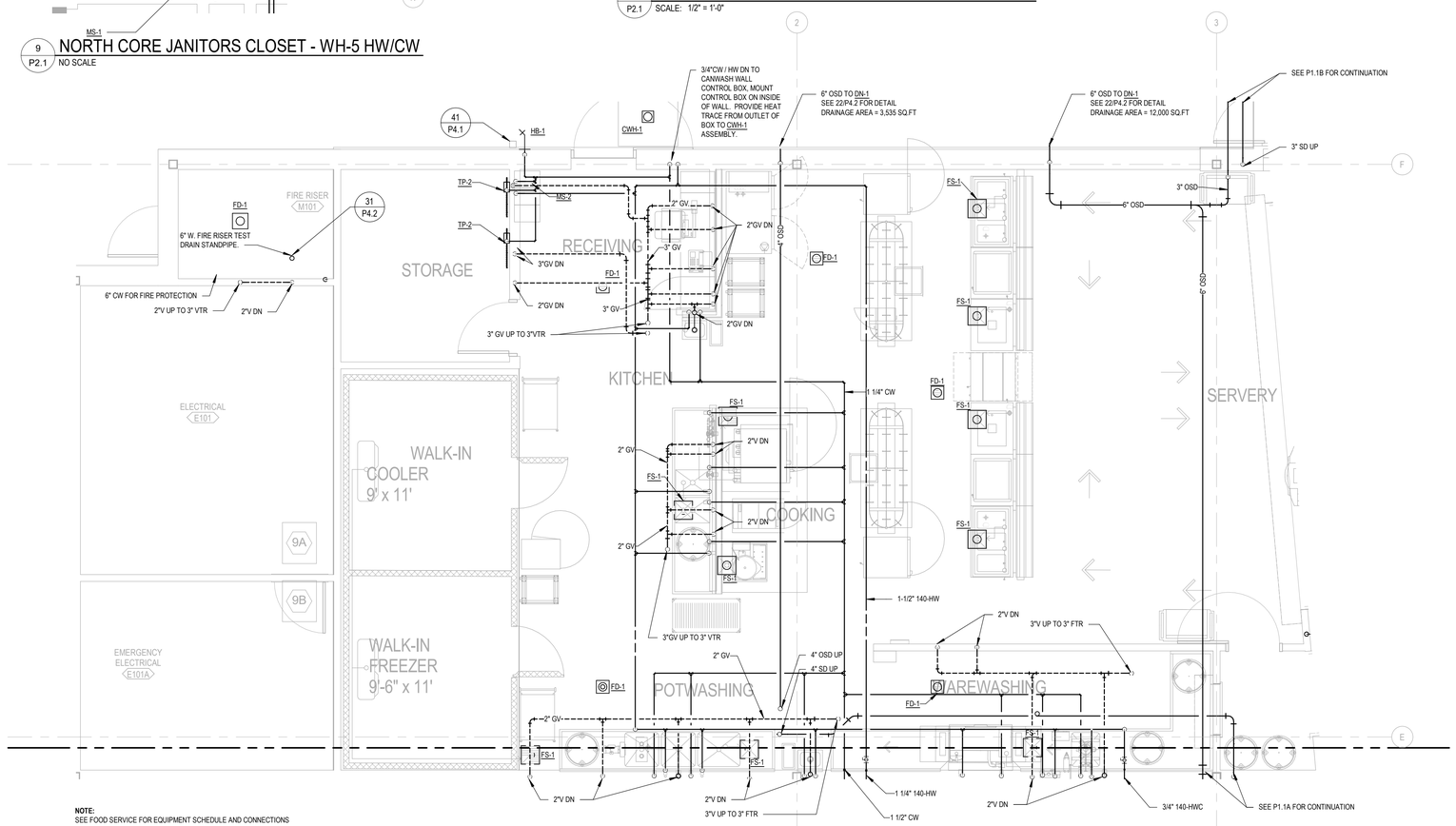

NOTE:
SEE FOOD SERVICE FOR EQUIPMENT SCHEDULE AND CONNECTIONS

7 P2.1 KITCHEN ENLARGED PLAN
SCALE: 1/4" = 1'-0"

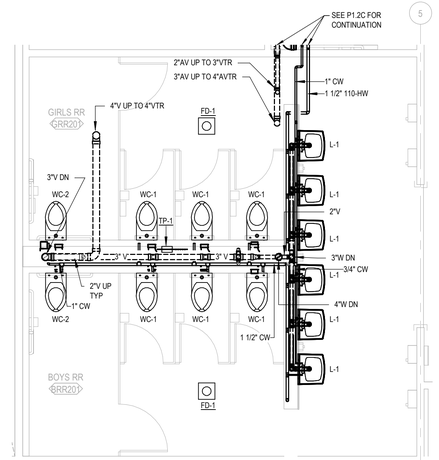

8 P2.1 RESTROOMS GRR201/BRR201 - ENLARGED PLUMBING PLAN
SCALE: 1/4" = 1'-0"

BID/PERMIT SET

CONDITIONAL USE NUMBER: CU2018-0016
DESIGN REVIEW NUMBER: DR2018-0114
SITE DEVELOPMENT PERMIT NUMBER: TBD
BUILDING PERMIT NUMBER: TBD

REGISTERED PROFESSIONAL ENGINEER
84086PE
DIGITAL SIGNATURE
OREGON
MARCH 9, 2010
CHRISTOPHER NARRAMORE
EXPIRES: 12/31/2020

Digitally signed by Chris Narramore
Date: 2019.03.14 08:57:21-07'00'

LARGE SCALE PLUMBING PLANS
ACMA
BEAVERTON SCHOOL DISTRICT

P2.1
74-18109-00
03/14/2019
REVISIONS

DLR Group
Architecture Engineering Planning Interiors

© 2019, DLR Group Architecture & Engineering Inc., an Oregon corporation, ALL RIGHTS RESERVED

C:\Revit\74-18109-00_ACMA_MEP_2018_Central_smargolis.rvt
3/13/2019 9:42:33 PM

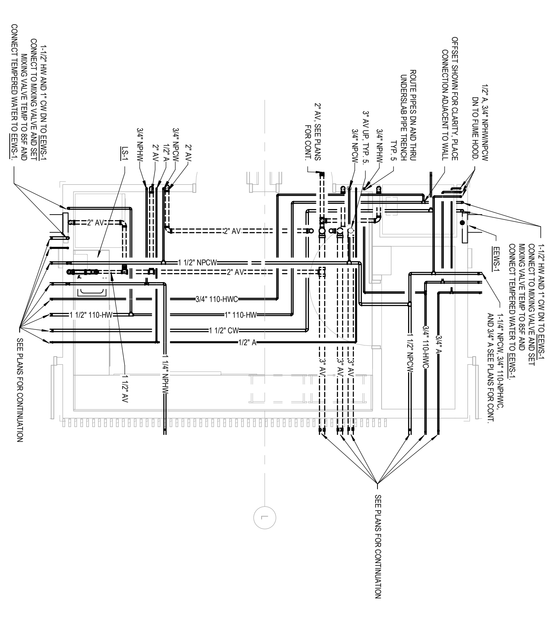
1-1/2" HW AND 1" CWDN TO EB3/E-1
CONNECT TO MIXING VALVE AND RESET MIXING VALVE TEMP TO 85F AND CONNECT TEMPERED WATER TO EB3/E-1
LS-1
3/4" NPHW
3/4" NPCW
2" AV
2" AV
2" AV
2" AV
2" AV
2" AV
1 1/2" NPCW
3/4" 110-HWC
1" 110-HW
1 1/2" CW
1/2" A
1 1/2" NPHW
1/2" AV
2" AV
2" AV
2" AV
2" AV
2" AV

SANITARY RISER DIAGRAM, LEVEL 1 & 2 - AREA A & B

SCALE:

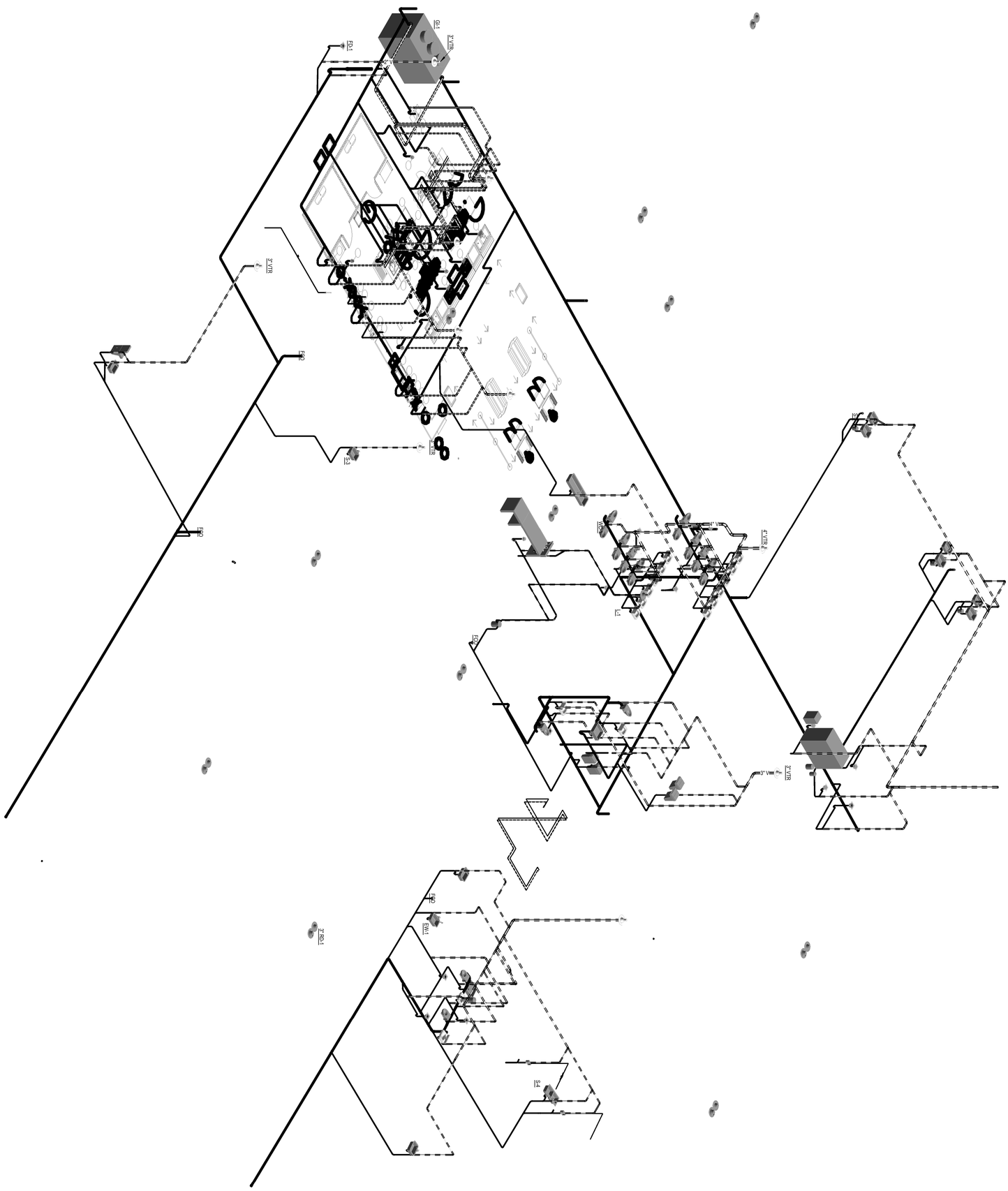

DLR Group
Architecture Engineering Planning Interiors

©2019, DLR Group Architecture & Engineering inc., an Oregon corporation, ALL RIGHTS RESERVED

P3.1
74-18109-00
03/14/2019
REVISIONS

PL RISER DIAGRAMS, W/V, LEVEL 1 & 2
ACMA
BEAVERTON SCHOOL DISTRICT

Digitally signed by Chris Hall
Date: 2019.03.14 15:10:37 -07'00'

REGISTERED PROFESSIONAL ENGINEER
DIGITAL SIGNATURE
OREGON
CHRISTOPHER W. HALL
EXPIRES: 12/31/2020

BID/PERMIT SET

CONDITIONAL USE NUMBER: CU2018-0016
DESIGN REVIEW NUMBER: DR2018-0114
SITE DEVELOPMENT PERMIT NUMBER: TBD
BUILDING PERMIT NUMBER: TBD

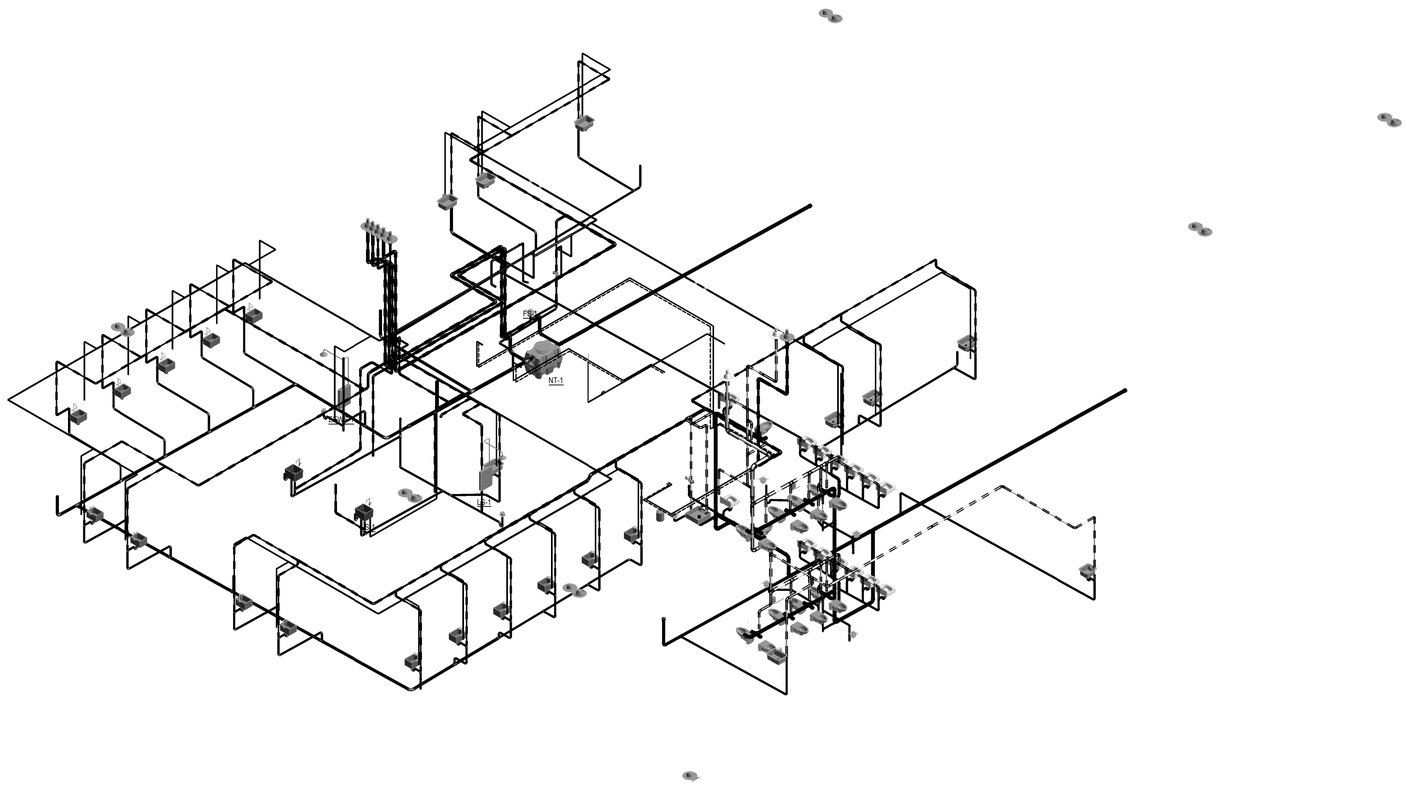

SANITARY RISER DIAGRAM, LEVEL 1 & 2 - AREA C

SCALE:

BID/PERMIT SET

CONDITIONAL USE NUMBER: CU2018-0016
DESIGN REVIEW NUMBER: DR2018-0114
SITE DEVELOPMENT PERMIT NUMBER: TBD
BUILDING PERMIT NUMBER: TBD

REGISTERED PROFESSIONAL ENGINEER
84086PE
DIGITAL SIGNATURE
OREGON
MARCH 9, 2019
CHRISTOPHER NARRAMORE

EXPIRES: 12/31/2020

Digitally signed by Chris Narramore
Date: 2019.03.14 08:58:01-07'00'

PL RISER DIAGRAMS, W/V, LEVEL 1 & 2

ACMA

BEAVERTON SCHOOL DISTRICT

P3.2

74-18109-00
03/14/2019
REVISIONS

DLR Group
Architecture Engineering Planning Interiors

© 2019, DLR Group Architecture & Engineering inc., an Oregon corporation, ALL RIGHTS RESERVED

C:\Revit\74-18109-00_ACMA_MEP_2018_Central_smargolis.rvt
3/13/2019 9:42:50 PM

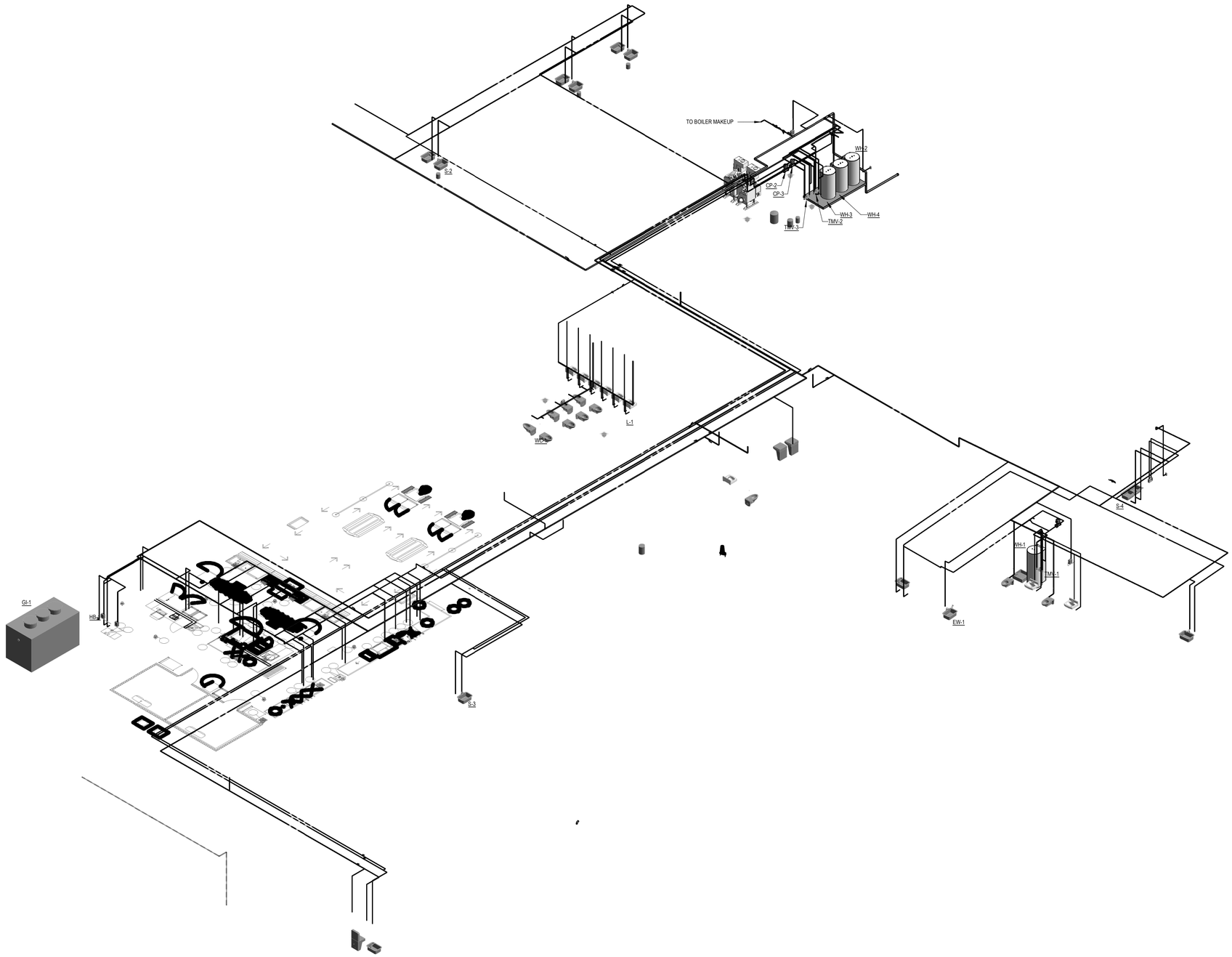

DOMESTIC RISER DIAGRAM, LEVEL 1 - AREA A & B

SCALE:

C:\Revit\74-18109-00_ACMA_MEP_2018_Central_smargolis.rvt
3/13/2019 9:42:58 PM

BID/PERMIT SET

CONDITIONAL USE NUMBER: CU2018-0016
DESIGN REVIEW NUMBER: DR2018-0114
SITE DEVELOPMENT PERMIT NUMBER: TBD
BUILDING PERMIT NUMBER: TBD

REGISTERED PROFESSIONAL ENGINEER
84086PE
DIGITAL SIGNATURE
OREGON
MARCH 9, 2010
CHRISTOPHER NARRAMORE

EXPIRES: 12/31/2020

Digitally signed by Chris Narramore
Date: 2019.03.14 08:58:12-07'00'

PL RISER DIAGRAMS, CW/HW, LEVEL 1
ACMA
BEAVERTON SCHOOL DISTRICT

P3.3
74-18109-00
03/14/2019
REVISIONS

DLR Group
Architecture Engineering Planning Interiors

©2019, DLR Group Architecture & Engineering Inc., an Oregon corporation, ALL RIGHTS RESERVED

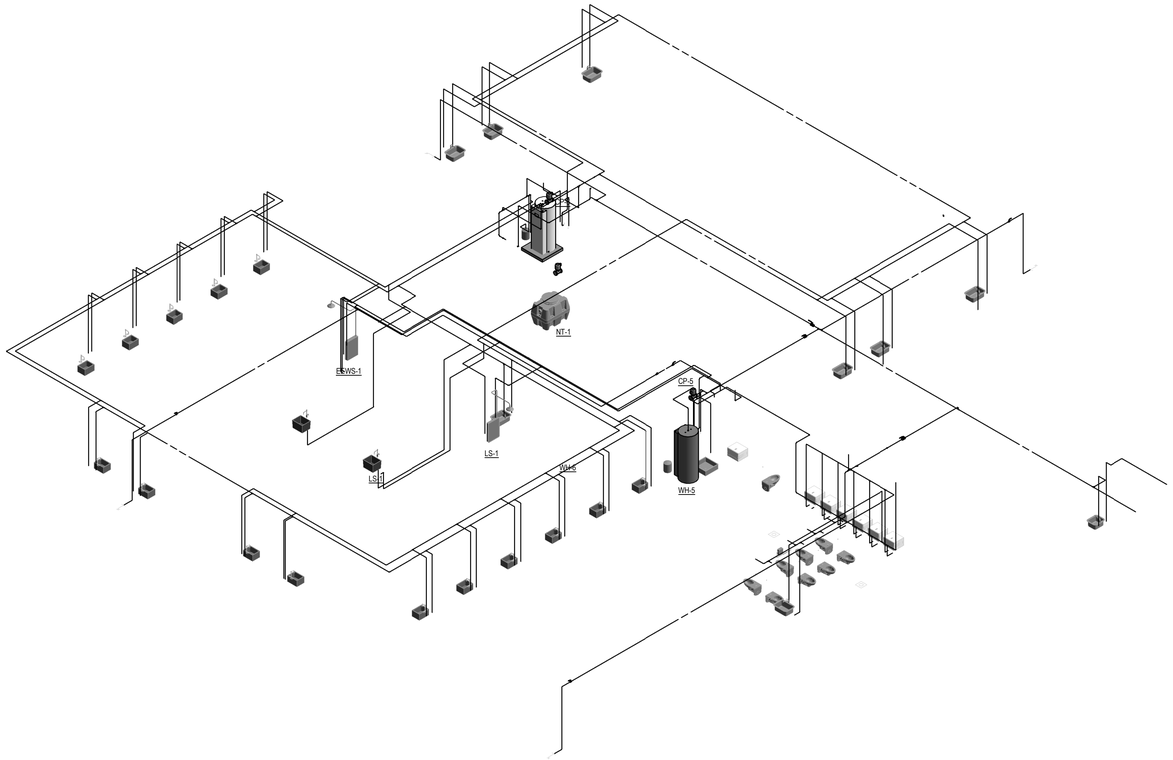

DOMESTIC RISER DIAGRAM, LEVEL 1 - AREA C

SCALE:

BID/PERMIT SET

CONDITIONAL USE NUMBER: CU2018-0016
DESIGN REVIEW NUMBER: DR2018-0114
SITE DEVELOPMENT PERMIT NUMBER: TBD
BUILDING PERMIT NUMBER: TBD

REGISTERED PROFESSIONAL ENGINEER
84086PE
DIGITAL SIGNATURE
OREGON
MARCH 9, 2010
CHRISTOPHER NARRAMORE

EXPIRES: 12/31/2020

Digitally signed by Chris Narramore
Date: 2019.03.14 08:58:25-07'00'

PL RISER DIAGRAMS, CW/HW, LEVEL 1

ACMA

BEAVERTON SCHOOL DISTRICT

P3.4

74-18109-00
03/14/2019
REVISIONS

DLR Group
Architecture Engineering Planning Interiors

©2019, DLR Group Architecture & Engineering Inc., an Oregon corporation, ALL RIGHTS RESERVED

C:\Revit\74-18109-00_ACMA_MEP_2018_Central_smargolis.rvt
3/13/2019 9:43:04 PM

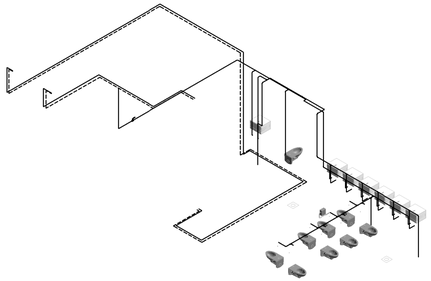

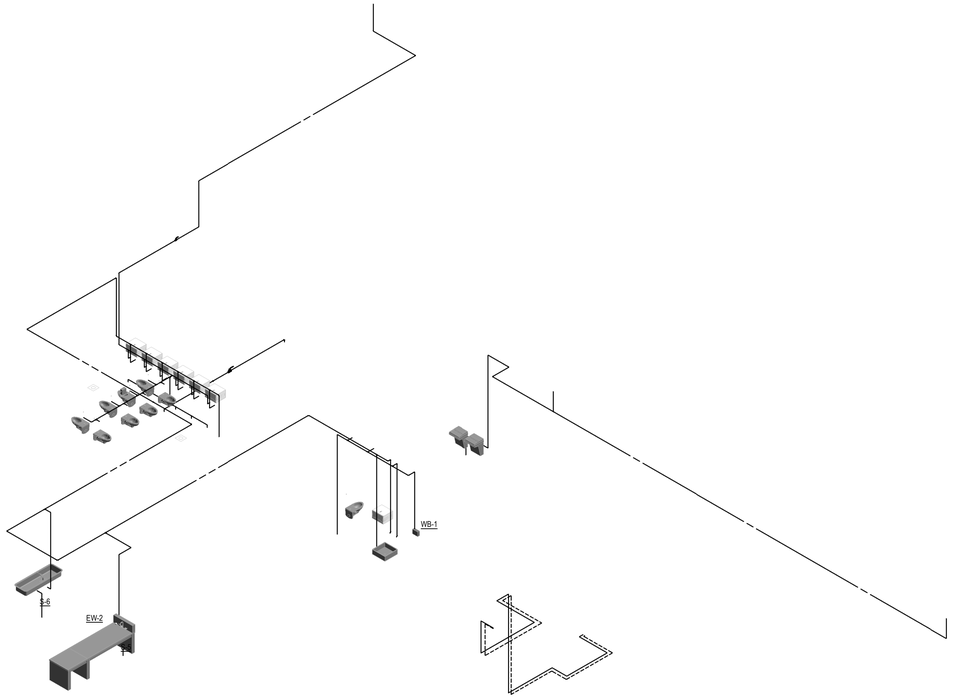

DOMESTIC RISER DIAGRAM, LEVEL 2 - AREA A, B & C

SCALE:

BID/PERMIT SET

CONDITIONAL USE NUMBER: CU2018-0016
DESIGN REVIEW NUMBER: DR2018-0114
SITE DEVELOPMENT PERMIT NUMBER: TBD
BUILDING PERMIT NUMBER: TBD

REGISTERED PROFESSIONAL ENGINEER
84086PE
DIGITAL SIGNATURE
OREGON
MARCH 9, 2019
CHRISTOPHER NARRAMORE
EXPIRES: 12/31/2020
Digitally signed by Chris Narramore
Date: 2019.03.14 08:58:35-07'00'

PL RISER DIAGRAMS, CW/HW, LEVEL 2

ACMA

BEAVERTON SCHOOL DISTRICT

P3.5

74-18109-00
03/14/2019
REVISIONS

DLR Group
Architecture Engineering Planning Interiors

© 2019, DLR Group Architecture & Engineering inc., an Oregon corporation, ALL RIGHTS RESERVED

C:\Revit\74-18109-00_ACMA_MEP_2018_Central_smargolis.rvt
3/13/2019 9:55:21 PM

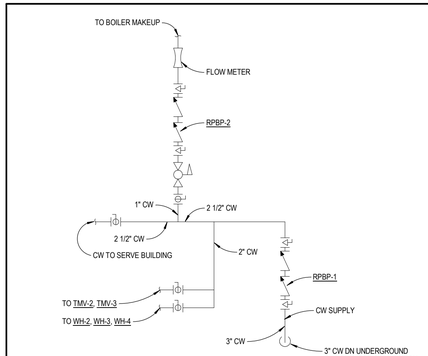

11 P4.1 WATER HEADER DIAGRAM
NO SCALE

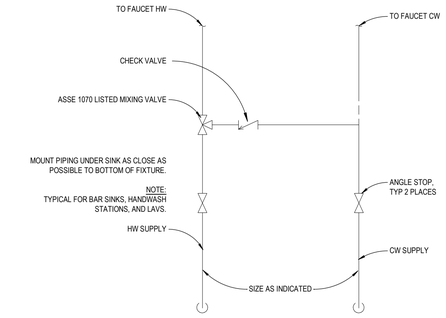

12 P4.1 LAV MIXING DETAIL
NO SCALE

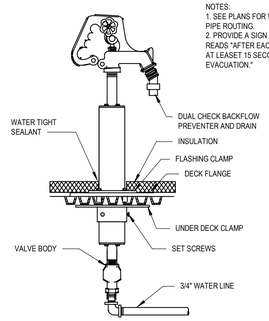

13 P4.1 ROOF HYDRANT DETAIL
NO SCALE

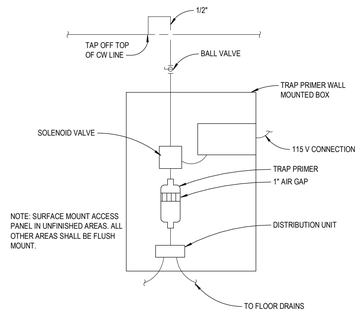

14 P4.1 TRAP PRIMER DETAIL
NO SCALE

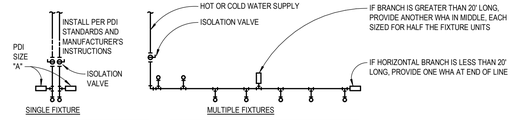

PDI SIZE	PIPE SIZE	FIXTURE UNIT LOAD
A	1/2"	1-11
B	3/4"	12-32
C	1"	33-60
D	1-1/4"	61-113
E	1-1/2"	114-154
F	2"	154-330

FIXTURE UNIT TABULATION		
FIXTURE	COLD	HOT
VALVE WATER CLOSET	10	--
TANK WATER CLOSET	5	--
URINAL	5	--
LAVATORY/SINK	1.5	1.5
JANITOR'S SINK	3	3
SHOWER/BATHTUB	2	2

INSTALL WATER HAMMER ARRESTERS IN WATER PIPING ACCORDING TO PDI-WH 201. INSTALL IN HORIZONTAL OR VERTICAL POSITION, BUT NEVER UPSIDE DOWN. INSTALL IN LINE WITH WATER FLOW DIRECTION IF POSSIBLE. SIZE THE UNITS AS SHOWN IN PDI-WH 201 OR PER THE TABLES SHOWN ABOVE.
PROVIDE WHA ON HW/CW FOR ALL TOILET GROUPS AND CLOTHES WASHERS.

15 P4.1 WATER HAMMER ARRESTOR DETAIL
NO SCALE

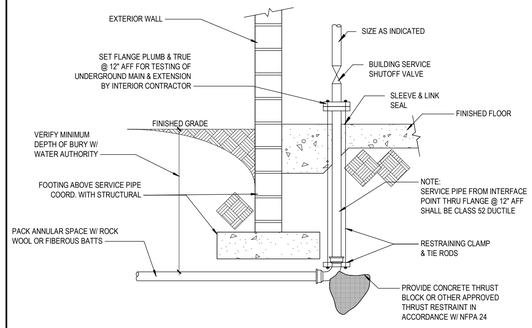

21 P4.1 DOMESTIC WATER ENTRANCE
NO SCALE

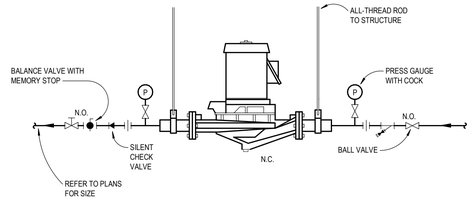

22 P4.1 INLINE CIRCULATOR PUMP DETAIL
NO SCALE

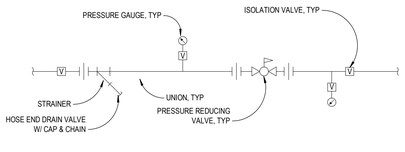

23 P4.1 PRESSURE REDUCING VALVE DETAIL
NO SCALE

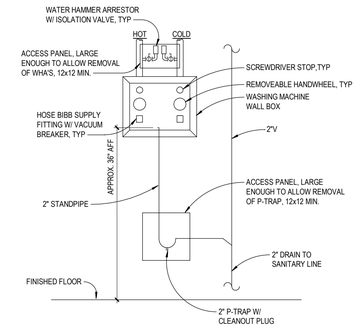

24 P4.1 WASHING MACHINE HOOKUP DETAIL
NO SCALE

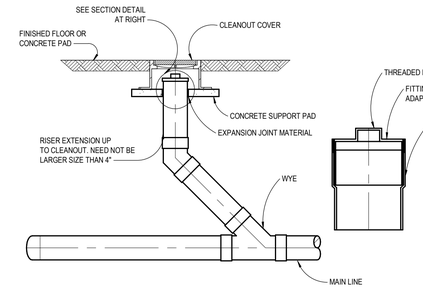

25 P4.1 FINISHED FLOOR CLEANOUT DETAIL
NO SCALE

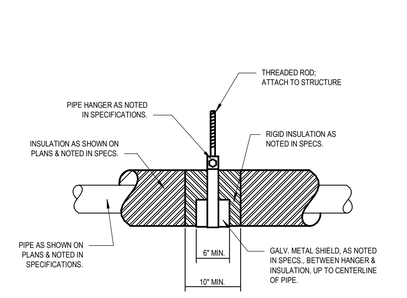

31 P4.1 INSULATED PIPE HANGER DETAIL
NO SCALE

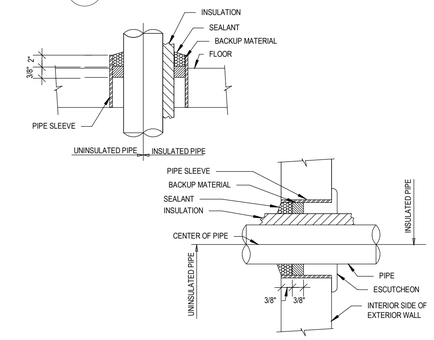

32 P4.1 PIPE PENETRATIONS DETAIL
NO SCALE

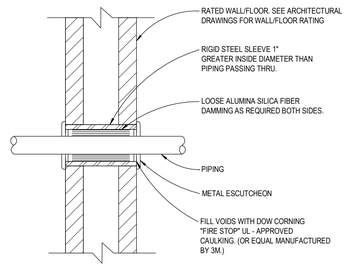

NOTE: RATED WALL SHOWN, RATE HORIZONTAL ASSEMBLY SIMILAR.

33 P4.1 PIPE THROUGH RATED WALL DETAIL
NO SCALE

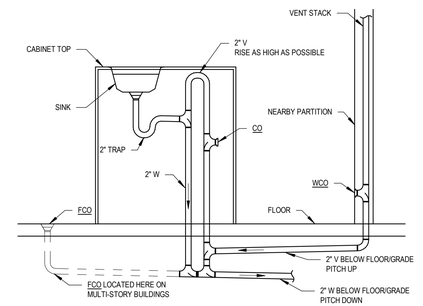

34 P4.1 ISLAND FIXTURE WASTE AND VENT
NO SCALE

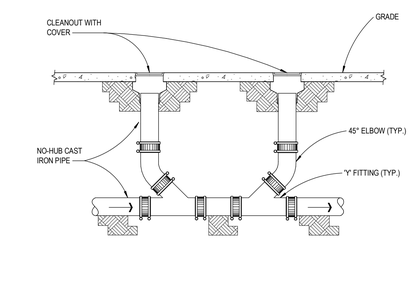

35 P4.1 2-WAY EXTERIOR CLEANOUT DETAIL
NO SCALE

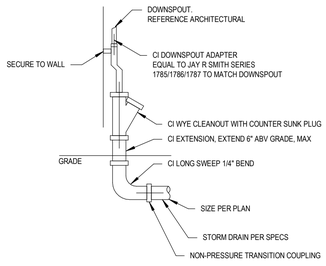

41 P4.1 DOWNSPOUT CONNECTOR DETAIL
NO SCALE

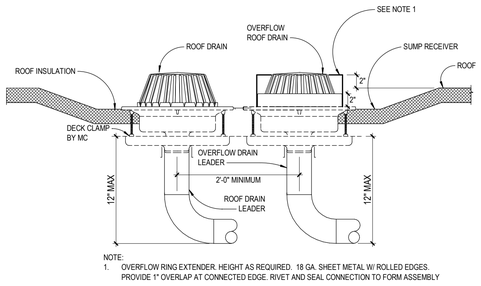

42 P4.1 OVERFLOW ROOF DRAIN DETAIL
NO SCALE

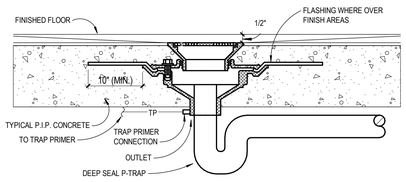

43 P4.1 TYPICAL FLOOR DRAIN DETAIL
NO SCALE

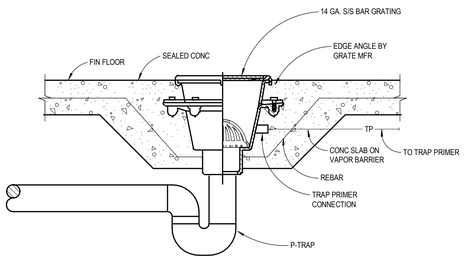

44 P4.1 TYPICAL FLOOR SINK DETAIL
NO SCALE

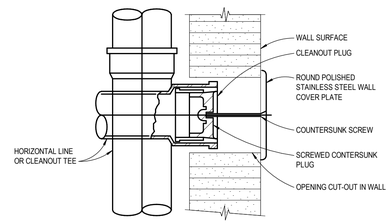

45 P4.1 WALL CLEANOUT DETAIL
NO SCALE

BID/PERMIT SET

CONDITIONAL USE NUMBER: CU2018-0016
DESIGN REVIEW NUMBER: DR2018-0114
SITE DEVELOPMENT PERMIT NUMBER: TBD
BUILDING PERMIT NUMBER: TBD

REGISTERED PROFESSIONAL ENGINEER
DIGITAL SIGNATURE
OREGON
MARCH 9, 2010
CHRISTOPHER NARRAMORE
84086PE
EXPIRES: 12/31/2020
Digitally signed by Chris Narramore
Date: 2019.03.14 08:58:52 -07'00'

PLUMBING DETAILS
ACMA
BEAVERTON SCHOOL DISTRICT

P4.1
74-18109-00
03/14/2019
REVISIONS

DLR Group
Architecture Engineering Planning Interiors

© 2019, DLR Group Architecture & Engineering Inc., an Oregon corporation, ALL RIGHTS RESERVED

C:\Revit\74-18109-00_ACMA_MEP_2018_Central_smargolis.rvt
3/13/2019 9:43:13 PM

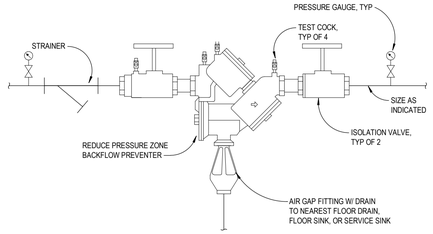

12 P4.2 DOMESTIC WATER BACKFLOW PREVENTER DETAIL
NO SCALE

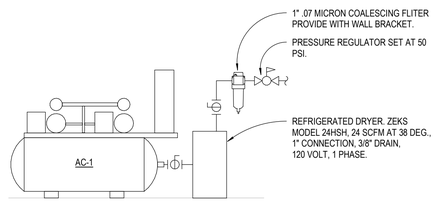

13 P4.2 AIR COMPRESSOR DETAIL
NO SCALE

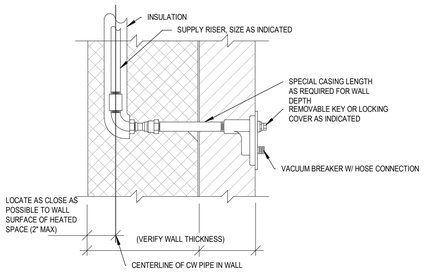

21 P4.2 RECESSED NON-FREEZE HOSE BIB DETAIL
NO SCALE

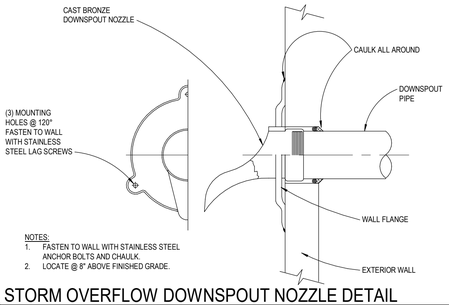

22 P4.2 STORM OVERFLOW DOWNSPOUT NOZZLE DETAIL
NO SCALE

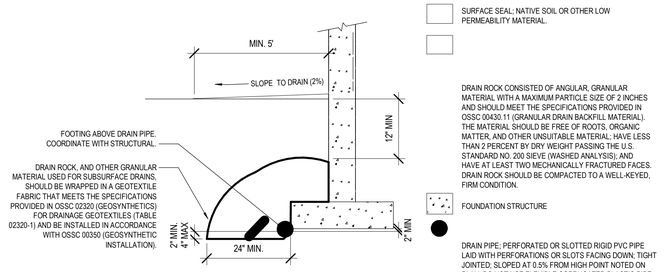

23 P4.2 FOOTING SUBDRAIN DETAIL
NO SCALE

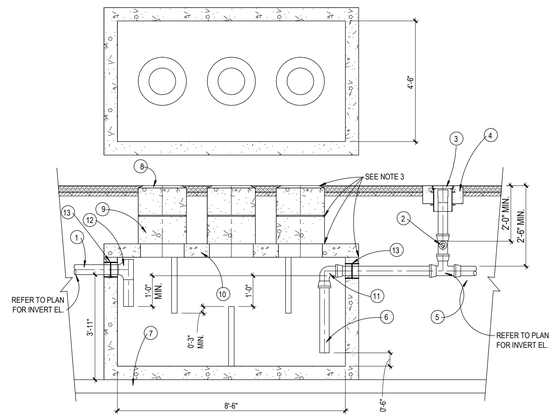

ITEM	DESCRIPTION
1	4" INLET PIPE
2	4" x 2" TEE WITH 2" PIPE TO BUILDING VENT
3	CLEAN OUT CAP JOSAM 58860 OR APPROVED EQUAL
4	CONCRETE PAD
5	4" x 4" VENT (STRAIGHT) TEE
6	4" OUTLET
7	4" - 6" SAND OR GRAVEL BEDDING
8	HEAVY-DUTY CAST IRON FRAME AND COVER *
9	CONCRETE ADJUSTMENT RINGS
10	REINFORCE AS REQUIRED FOR SERVICE CONDITIONS
11	4" 90°
12	4" TEE
13	A-LOK OR PRESS SEAL PSX PIPE/WALL CONNECTOR

* CLAY & BAILEY 2008 BV OR EQUAL (FROST PROOF COVERS OPTIONAL)

NOTES:
1. THREE COVERS AND RISERS SHOWN. TWO COVERS AND RISERS CENTERED OVER UPPER TWO BAFFLES ARE OPTIONAL.
2. INTERCEPTOR SIZE - 1250 GAL MINIMUM
3. ALL JOINTS AT THE FRAME & COVER*, CONCRETE ADJUSTMENT RINGS AND THE LID OF THE INTERCEPTOR SHALL BE SEALED WITH A MINIMUM OF TWO (2) ROWS OF 3/4 TO 1 INCH PREFORMED BITUMASTIC JOINT SEALER AND A 6" BUTYL JOINT WRAP AROUND SLEEVE (EZ WRAP). THE ENDS OF THE 6" EZ WRAP SHALL OVERLAP BY 12".

14 P4.2 GREASE INTERCEPTOR DETAIL
NO SCALE

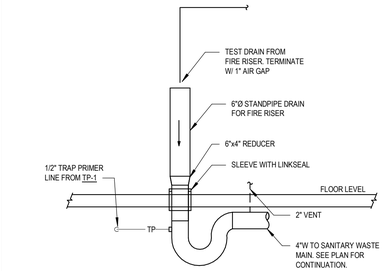

31 P4.2 FIRE RISER TEST DRAIN STANDPIPE
NO SCALE

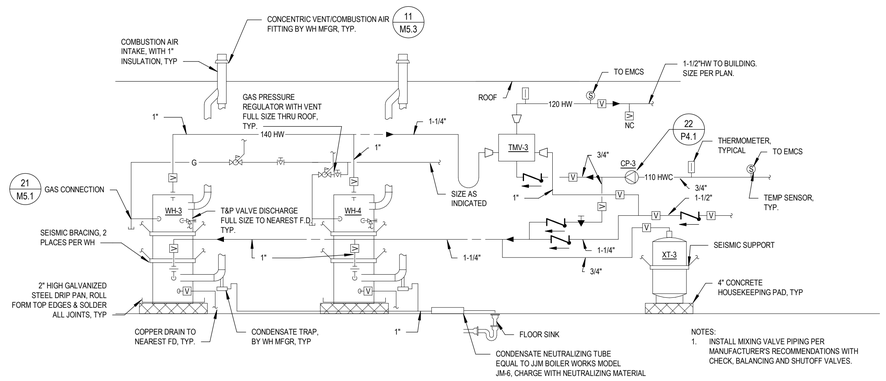

32 P4.2 DOMESTIC HOT WATER PIPING SCHEMATIC- WH-3 & WH-4
NO SCALE

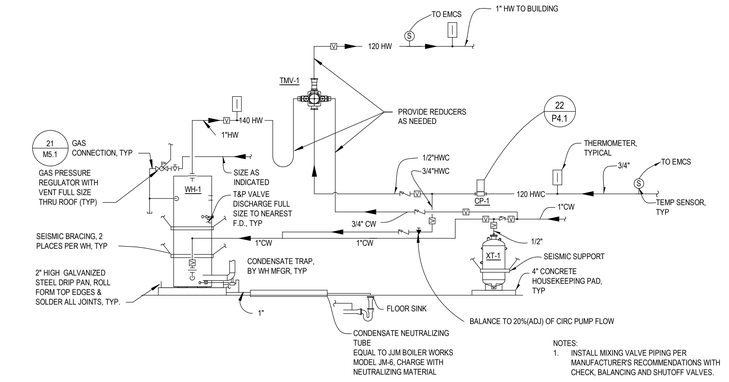

33 P4.2 DOMESTIC HOT WATER PIPING SCHEMATIC - WH-1
NO SCALE

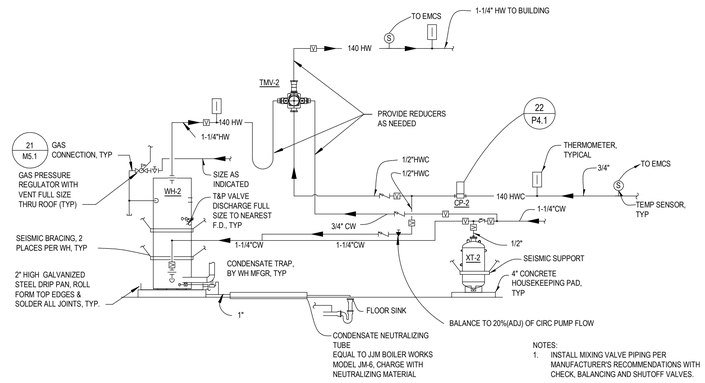

41 P4.2 DOMESTIC HOT WATER PIPING SCHEMATIC - WH-2
NO SCALE

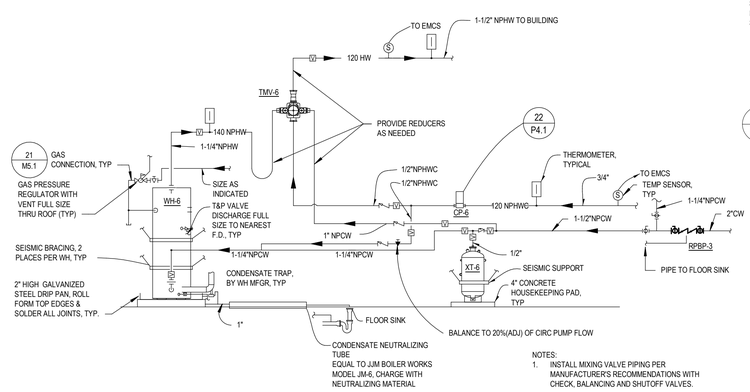

42 P4.2 DOMESTIC HOT WATER PIPING SCHEMATIC - WH-6
NO SCALE

PLUMBING FOR WH-5, XT-5, TMV-5 & CP-5 IS SIMILAR EXCEPT PIPE FOR ONE WATER HEATER. ALL PIPE SIZES ARE THE SAME AS IN THIS DETAIL.

BID/PERMIT SET

CONDITIONAL USE NUMBER: CU2018-0016
DESIGN REVIEW NUMBER: DR2018-0114
SITE DEVELOPMENT PERMIT NUMBER: TBD
BUILDING PERMIT NUMBER: TBD

REGISTERED PROFESSIONAL ENGINEER
84086PE
DIGITAL SIGNATURE
OREGON
MARCH 9, 2018
CHRISTOPHER NARRAMORE

EXPIRES: 12/31/2020

Digitally signed by Chris Narramore
Date: 2019.03.14 08:59:02 -07'00'

PLUMBING DETAILS
ACMA
BEAVERTON SCHOOL DISTRICT

P4.2
74-18109-00
03/14/2019
REVISIONS

DLR Group
Architecture Engineering Planning Interiors

©2019, DLR Group Architecture & Engineering Inc., an Oregon corporation, ALL RIGHTS RESERVED

C:\Revit\74-18109-00_ACMA_MEP_2018_Central_smargolis.rvt
3/13/2019 9:43:14 PM

.RECIRCULATION PUMP SCHEDULE.

MARK	Area Served	PUMP TYPE	GPM	PUMP HEAD (FT WC)	MOTOR DATA				WEIGHT (LBS)	BASIS OF DESIGN (BELL & GOSSET)	NOTES
					HP	V	PH	RPM			
CP-1	WH-1	INLINE	2	20	0.091	115	1	2060	25.00	ECOCIRC XL 55-45	1,2
CP-2	WH-2	INLINE	2	22	0.104	115	1	2889	25.00	ECOCIRC XL 55-45	1,2
CP-3	WH-3&4	INLINE	4	40	0.271	115	1	3913	25.00	ECOCIRC XL 55-45	1,2
CP-4	NOT USED			0	0	0	0	0		NOT USED	
CP-5	WH-5	INLINE	2	25	0.125	115	1	3078	25.00	ECOCIRC XL 55-45	1,2
CP-6	WH-6	INLINE	2	35	0.203	115	1	3636	25.00	ECOCIRC XL 55-45	1,2

NOTES:
1. BRONZE CONSTRUCTION.
2. REFERENCE DETAIL XX/M4.3 FOR PUMP CONTROL.

.THERMOSTATIC MIXING VALVE SCHEDULE.

MARK	SERVES	LOCAL CONNECTIONS (IN)			MIN GPM	Maximum Working Pressure PSI	DESIGN FLOW (GPM)	BASIS OF DESIGN (LEONARD)	NOTES
		CW	HW	TW					
TMV-1	WH-1	3/4"	3/4"	3/4"	1	20.00 psi	6	TM-26-LF	1,2,3
TMV-2	WH-2	3/4"	3/4"	3/4"	1	20.00 psi	12.6	TM-26-LF	1,2,3
TMV-3	WH-3 & 4	3/4"	3/4"	1"	1	20.00 psi	21.1	TM-420B-LF-DT	1,2,3
TMV-4	NOT USED							NOT USED	
TMV-5	WH-5	3/4"	3/4"	1"	1	20.00 psi	21.6	TM-420B-LF-DT	1,2,3
TMV-6	WH-6	3/4"	3/4"	3/4"	1	20.00 psi	12.5	TM-26-LF	1,2,3

NOTES:
1. REFER TO FLOOR PLANS FOR ADDITIONAL MIXING VALVES USED FOR EMERGENCY EYE WASH/SHOWERS, AND POINT OF USE LAVATORIES.
2. MIXING VALVE PIPING METHOD SHALL BE PER MANUFACTURER'S RECOMMENDATIONS. INSTALL ALL BALANCING VALVES AND CHECK VALVES AS NEEDED PER THE CORRECT PIPING METHOD.
3. INSTALL MIXING VALVES IN RIGHT SIDE UP ORIENTATION.

.EXPANSION TANK SCHEDULE. - PLMB

MARK	SERVES	ESTIMATED SYS. VOL. (GAL)	TEMP RANGE (°F)		PRESSURE RANGE (PSIG)		MIN. ACCEPTANCE VOLUME (GAL)	MIN. TANK VOLUME (GAL)	BASIS OF DESIGN (AMTROL)	NOTES
			MAX	MIN	MAX	MIN				
XT-1	WH-1	115.0	140 °F	50 °F	50.00	150.00	3.2	6.4	ST-12-C	1,2
XT-2	WH-2	95.0	140 °F	50 °F	50.00	150.00	0.9	2.1	ST-5-C	1,2
XT-3	WH-3 & 4	180.0	140 °F	50 °F	50.00	150.00	3.2	6.4	ST-12-C	1,2
XT-4	NOT USED								NOT USED	
XT-5	WH-5	115.0	140 °F	50 °F	50.00	150.00	3.2	6.4	ST-12-C	1,2
XT-6	WH-6	110.0	140 °F	50 °F	50.00	150.00	3.2	6.4	ST-12-C	1,2

NOTES:
1. TANK SHALL BE ASME RATED.
2. TANK SHALL BE RATED FOR POTABLE WATER SYSTEMS.

.SUMP PUMP SCHEDULE.

MARK	LOCATION	PUMP TYPE	GPM	PUMP HEAD (FT WC)	MOTOR DATA				BASIS OF DESIGN (BELL & GOSSET)	NOTES
					HP (WATT)	V	PH	RPM		
SP-1	ELEVATOR PIT	SUBMERSIBLE	50	15	0.5	115	1	3400	1EC0511	1

NOTES:
1. MANUFACTURER'S ELEVATOR SUMP KIT W/CONTROLLER, OIL SMART SWITCH & ALARM. CONNECT ALARM TO BAS.

.AIR COMPRESSOR SCHEDULE.

MARK	TYPE	SCFM @ 100PSIG	STAGES	MAXIMUM PRESSURE (PSIG)	RECEIVER	PHYSICAL DATA		ELECTRICAL DATA			BASIS OF DESIGN (POWEREX)	NOTES
					CAP. (GAL)	WEIGHT (LBS)	DIMENSIONS LXWXH (IN)	HP	V	PH		
AC-1	SCROLL	23	1	116	120	975	76X55X35	7.5	460	3	STES075	SEE BELOW

NOTES
1. PROVIDE ISO-CLASS 4 FILTRATION, PARKER MODEL # HN2S W/ GRADE6 COALESCER
2. PROVIDE W/ ELECTRONIC DRAIN VALVE (EDV) MODEL# ZLD -013 .PROVIDE 120V POWER TO EDV
3. PROVIDE W/ STARTUP KIT, MAGENTIC STARTER AND RECEIVER TANK DRAIN.
4. RECEIVER TANK SHALL BE ASME RATED
5. CONNECT WITH ANALOG OUTPUTS TO DDC SYSTEM FOR SYSTEM MONITORING PURPOSES ONLY.

.AIR DRYER SCHEDULE.

MARK	SCFM	INLET/OUTLET CONNECTION	MAX PRESSURE (PSIG)	PHYSICAL DATA		ELECTRICAL DATA			BASIS OF DESIGN (ZEKS)	NOTES
				WEIGHT (LBS)	DIMENSIONS LXWXH (IN)	KW	V	PH		
AD-1	24	1/2"	200	90	20X16X27	0.45	115	1	24HSH	SEE BELOW

NOTES:
1. CONNECT WITH ANALOG OUTPUTS TO DDC SYSTEM FOR SYSTEM MONITORING PURPOSES ONLY.
2. INSTALL PER MANUFACTURER'S RECOMMENDATIONS

.REDUCED PRESSURE BACKFLOW PREVENTER SCHEDULE.

MARK NO.	LOCATION	AREA SERVED	SIZE	MODEL (ZURN WILKINS)	NOTES
RPBP-1	MECHANICAL M100	BUILDING DOMESTIC	3"	375A	1,2
RPBP-2	MECHANICAL M100	BOILER MAKEUP	1"	975XL2	1,2
RPBP-3	SCIENCE MECHANICAL M102	SCIENCE NONPOTABLE	2"	975XL2	1,2
RPBP-4	BREAKROOM 112	ICE MAKER BOX WB-3	1/2"	975XLST	1,2

NOTES:
1. PROVIDE BLOWOFF RELIEF PIPING TO NEAREST FLOOR DRAIN/FLOOR SINK
2. PROVIDE WYE STRAINER UPSTREAM OF RPBP

.PLUMBING FIXTURE SCHEDULE.

MARK	FIXTURE	LOCAL CONNECTIONS (IN)							BASIS OF DESIGN	NOTES	REMARKS
		W	V	CW	HW	TW	G	A			
AT-1	AIR TURRET DECK MOUNTED						0"	1/2"	CHICAGO 980-WS909CAGCP		PROVIDE WITH AIR BUTTON
CT-1	CLAY TRAP	2"							JAY R SMITH 8710		INSTALL UNDER THE CABINET. INSTALL PER MANUFACTURER'S RECOMMENDATION. ENSURE SPACE FOR SEDIMENT BUCKET REMOVAL
CWH-1	CAN WASH	3"	2"	3/4"	3/4"				JAY R SMITH 3370Y, AND 3380 VALVE BOX.	3	
DF-1	DRINKING FOUNTAIN	2"	1 1/2"	1/2"					ELKAY EDFP217C		
DF-2	BOTTLE FILLING STATION	2"	1 1/2"	1/2"					ELKAY EZWSMDK		
DN-1	DOWNSPOUT NOZZLE			0"					CAST IRON JAY R SMITH 1770Y		SEE PLANS FOR SIZE
EEWS-1	EMEGENCY EYE WASH / SHOWER	1 1/2"	1 1/2"			1/2"			HAWS 8356WCSM WALL/CEILING MOUNTED COMBINATION SHOWER AND EYE/FACE WASH		WALL RECESSED. PROVIDE W/ 9210E AXION THERMOSTATIC MIXING VALVE
EW-1	EMERGENCY EYE WASH	1 1/2"	1 1/2"			1/2"			HAWS 8904 DECK-MOUNTED EYE/FACE WASH	7	WALL MOUNTED, PROVIDE WITH THERMOSTATIC MIXING VALVE TWBS.EWE, MOUNT AT ADA HEIGHT
EW-2	EMERGENCY EYE WASH	1 1/2"	1 1/2"			1/2"			HAWS 7610 WALL-MOUNTED EYE/FACE WASH	7	WALL MOUNTED, PROVIDE WITH THERMOSTATIC MIXING VALVE TWBS.EWE, MOUNT AT ADA HEIGHT
FD-1	FLOOR DRAIN	2"	1 1/2"						JAY R SMITH 2005Y		
FD-2	FLOOR DRAIN - LABS	3"	2"						JAY R SMITH 2005Y		REMARKS
FS-1	FLOOR SINK	3"	2"						JAY R SMITH 3100Y	2	
GT-1	GAS TURRENT DECK MOUNTED						1/2"	0"	CHICAGO 980-WS909CAGCP		PROVIDE WITH GAS BUTTON
HB-1	EXTERIOR HOSE BIBB			3/4"					ZURN NON FREEZE WALL FAUCET Z1321-C	9	NON FREEZE WALL HYDRANT
HB-2	ROOF HOSE BIBB			3/4"					ZURN Z1388	4	NON FREEZE ROOF HYDRANT
L-1	LAVATORY - WALL MOUNTED	1 1/2"	1 1/2"	1/2"	1/2"				WALL HUNG, KOHLER K-2032 W/ CHICAGO 802-VE2805-665ABCP	5,8	
LS-1	SINK - SCIENCE	2"	1 1/2"	1/2"	1/2"				DURCON D15C INTEGRAL DROP IN SINK, CHICAGO 930-369CP SINGLE HOLE, DECK MOUNTED, 6" GOOSENECK, W/VACUUM BREAK	1	PROVIDE WITH G/AT-1
MS-1	MOP SINK	3"	2"	3/4"	3/4"				FIAT MSB-2424 WITH CHICAGO 540-LD897SWXFABCP	6	PROVIDE W/BASKET STRAINER, BRASS DRAIN.
MS-2	MOP SINK - KITCHEN	3"	2"	3/4"	3/4"				MOP SINK FIXTURE BY FOORD SERVICE, PROVIDE CHICAGO 540-LD897SWXFABCP	6	PROVIDE W/BASKET STRAINER, BRASS DRAIN.
RD/ORD-1	ROOF DRAIN/OVERFLOW ROOF DRAIN								COMBINATION ROOF DRAIN / OVERFLOW ROOF DRAIN FIXTURE, JOSAM 22203-10, CAST IRON		SEE PLANS FOR SIZE
S-1	SINK	2"	1 1/2"	1/2"	1/2"				ELKAY LR2522 TOP MOUNT W/ CHICAGO FAUCET 50-ABCP	5	
S-2	SINK - ART	2"	1 1/2"	1/2"	1/2"				ELKAY LR2522 TOP MOUNT W/ CHICAGO FAUCET 50-ABCP	5	PROVIDE WITH CLAY TRAP
S-3	SINK - MUSIC	2"	1 1/2"	1/2"	1/2"				ELKAY EWS25202 WALL HUNG W/ CHICAGO FAUCET W4W-DB6AE1-317ABCP	5	FAUCET SHALL BE WALL MOUNTED 4" CENTERS, 6-1/2" GOOSENECK, W/4" WRISTBLADES.
S-4	SINK - DOUBLE SINK	2"	1 1/2"	1/2"	1/2"				ELKAY LRADQ291865PD TOP MOUNT W/ CHICAGO FAUCET 50-ABCP	5	
S-5	SINK - DARKROOM SINK	2"	1 1/2"	1/2"	1/2"				CALIFORNIA STAINLESS MFG. WA3384-5 W/ PA2 FIXTURE ASSEMBLY		PROVIDE WITH SEBASTIAN DARKROOM PRODUCTS SWFP-2 20 MICRON WATER FILTER OR APPROVED EQUAL
S-6	SINK - PHOTO CLASS SINK	2"	1 1/2"	1/2"	1/2"				CALIFORNIA STAINLESS MFG., STANDARD SINKS - SERIES 800, TYPE 4 W/ BACKSPLASH, 24"x84"x5" (809T4)		
TP-1	TRAP PRIMER			3/4"					PPP-PTS-6	10	
TP-2	TRAP PRIMER			3/4"					PPP-PTS-10	10	
WB-1	WASHING MACHINE OUTLET BOX	2"	2"	1/2"	1/2"				GUYGRAY W2700HA		PROVIDE WITH INTEGRAL WATER HAMMER ARRESTOR
WB-2	DISHWASHER OUTLET BOX	2"	2"	1/2"	1/2"				GUYGRAY MDWB1AB		PROVIDE WITH INTEGRAL WATER HAMMER ARRESTOR
WB-3	ICE MAKER	0"	0"	1/2"	0"				GUYGRAY AB9700HA		PROVIDE WITH INTEGRAL WATER HAMMER ARRESTOR
WC-1	WATER CLOSET	4"	2"	1 1/4"					KOHLER K-4325 WITH SLOAN ROYAL 111-1.28 (1.28 GPF)	11	

GENERAL NOTES:
A. ALL PLUMBING FIXTURES SHALL BE NSF CERTIFIED 'LEAD FREE'

NOTES:
1. PROVIDE DURCON INTEGRAL DROP IN SINK. SEE ARCH FOR MANUFACTURER, SEE SPECIFICATIONS FOR SIZE. SINK TO BE PROVIDED BY DIVISION 22.
2. CONTRACTOR SHALL COORDINATE FULL, HALF, OR NO GRATE WITH FOOD SERVICE PLANS.
3. PROVIDE CAN WASH WITH HEAT TRACE PIPING FROM OUTLET OF JAY R SMITH 3380 VALVE BOX TO FIXTURE. 120V/1PH.
4. DRAIN LINES TO BE 1/4" DIAMETER, HARD PIPED AND SLOPED 1/8"/FT (1%). TERMINATE DRAIN LINE AT DRAINAGE FIXTURE WITH AIR GAP.
5. PROVIDE LAVS/SINKS WITH DRAINS, T RAPS, AND APPURTENANCES PER SPECIFICATIONS. PROVIDE ALL LAVS WITH TRUEBRO LAVGUARD 2 103E-Z FOR TWO SUPPLIES, TRAP, AND OFFSET TAILPIECE.
6. INSTALL CHECK VALVES ON HW/CW SERVICE TO MOP SINKS.
7. COORDINATE MOUNTING LOCATION WITH ARCHITECT, LOCATION TO MEET ADA REQUIREMENTS.
8. PROVIDE FAUCET STEM WITH DOUBLE NUTS.
9. NON FREEZE WALL HYDRANT WITH ANTI-SIPHON, AUTOMATIC DRAINING AND INTEGRAL BACKFLOW PREVENTER.
10. PROVIDE MODEL PTS-6 FOR 6 OR FEWER FLOOR DRAINS, PTS-10 FOR 6 TO 10 FLOOR DRAINS.
11. PROVIDE WITH WHITE TOILET SEAT.

.WATER HEATER SCHEDULE - GAS

MARK	AREA SERVED	TANK CAPACITY (GAL)	RECOVERY (GPH)	EWT (°F)	LWT (°F)	INPUT MBH	FUEL TYPE	GAS PRESSURE		ELECTRICAL DATA				BASIS OF DESIGN (A.O. SMITH)	NOTES
								MIN. (IN WG)	MAX (IN WG)	AMPS	V	PH	HZ		
WH-1	ADMIN	100	235	40	140	199	NG	3.50	14.00	5	120	1	60	BTH-199A	1,2,3,4,5
WH-2	KITCHEN	60	138	40	140	120	NG	3.50	14.00	5	120	1	60	BTH-120A	1,2,3,4,5
WH-3	SOUTH CORE AND MUSIC	60	138	40	140	150	NG	3.50	14.00	5	120	1	60	BTH-120A	1,2,3,4,5
WH-4	SOUTH CORE AND MUSIC	60	138	40	140	150	NG	3.50	14.00	5	120	1	60	BTH-120A	1,2,3,4,5
WH-5	NORTH CORE	100	291	40	140	250	NG	3.50	14.00	5	120	1	60	BTH-250A	1,2,3,4,5
WH-6	SCIENCE NPHW	100	291	40	140	250	NG	3.50	14.00	5	120	1	60	BTH-250A	1,2,3,4,5

NOTES:
1. CONTRACTOR TO PROVIDE PRESSURE REGULATOR TO UNIT'S GAS REQUIREMENTS.
2. PROVIDE ASME RATED TEMP. & PRESSURE RELIEF & DRAIN VALVE.
3. PROVIDE RELAY CONNECTED TO EPO SWITCH IN ROOM FOR EMERGENCY POWER OFF.
4. PROVIDE CONCENTRIC VENT KIT.
5. PROVIDE CONDENSATE NEUTRALIZATION KIT.

GRAVITY GREASE INTERCEPTOR SIZING CALCULATION.

KITCHEN DRAIN LINES DFU COUNT:

EQUIPMENT		DFUS
5 FLOOR DRAINS @ 2 DFUS	=	10
10 FLOOR SINKS @ 2 DFUS	=	20
0 MOP SINK @ 3 DFUS	=	0
2 HAND WASH SINKS @ 2 DFUS	=	4
3 FOOD WASTE SINKS @ 2 DFUS	=	6
1 3-COMPARTMENT SINK @ 6 DFUS	=	6
1 HEATING KETTLE @ 4 DFUS	=	4
1 DISHWASHER @ 4 DFUS	=	4
1 POT WASHER @ 4DFUS	=	4
		58

PER 2017 OREGON PLUMBING SPECIALTY CODE TABLE 1014.3.6,
THE GREASE INTERCEPTOR WILL BE SIZED AT MIN 1250 GALLONS

.GRAVITY GREASE INTERCEPTOR SCHEDULE.

MARK	SERVICE	VOLUME (GAL)	WASTE (IN)	DIMENSIONS (LxWxH)	BASIS OF DESIGN	NOTES
GI-1	KITCHEN 135	1500	4"	134x68x91	OLD CASTLE PRECAST 5106-GA (1500 GAL)	

.ACID NEUTRALIZATION TANK SCHEDULE.

MARK	SERVES	VOLUME (GAL)	WASTE (IN)	DIMENSIONS (LxWxH)	BASIS OF DESIGN	NOTES
NT-1	SCIENCE LAB EAST/WEST 150/149	125	3"	46" x 32" x 38 1/2"	STRIEM LB-125	

BID/PERMIT SET

CONDITIONAL USE NUMBER: CU2018-0016
DESIGN REVIEW NUMBER: DR2018-0114
SITE DEVELOPMENT PERMIT NUMBER: TBD
BUILDING PERMIT NUMBER: TBD

REGISTERED PROFESSIONAL ENGINEER
84086PE
DIGITAL SIGNATURE
OREGON
MARCH 9, 2018
CHRISTOPHER NARRAMORE

EXPIRES: 12/31/2020

Digitally signed by Chris Narramore
Date: 2019.03.14 08:59:13-07'00'

PLUMBING SCHEDULES
ACMA
BEAVERTON SCHOOL DISTRICT

P5.1
74-18109-00
03/14/2019
REVISIONS

DLR Group
Architecture Engineering Planning Interiors

©2019, DLR Group Architecture & Engineering Inc., an Oregon corporation, ALL RIGHTS RESERVED

C:\Revit\74-18109-00_ACMA_MEP_2018_Central_smargolis.rvt
3/13/2019 9:51:30 PM

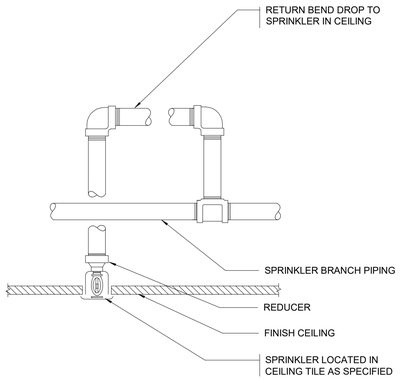

12 FP1.0 CONCEALED SPRINKLER DIAGRAM
NO SCALE

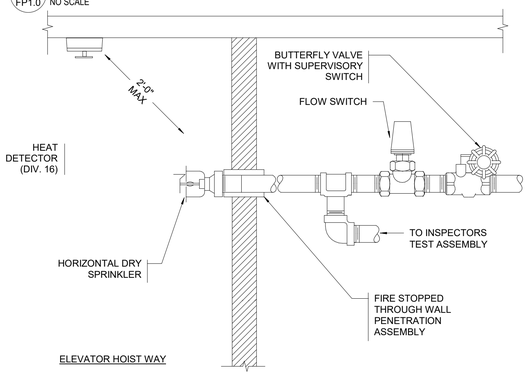

22 FP1.0 ELEVATOR HOISTWAY SPRINKLER DIAGRAM
NO SCALE

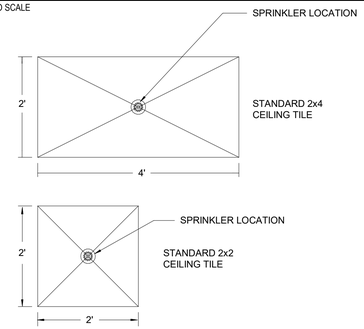

NOTE: REFER TO SPECIFICATION SECTION 15300 FOR SPRINKLER TYPES AND LOCATION REQUIREMENTS.

32 FP1.0 LOCATION OF SPRINKLERS AT ACOUSTICAL CEILING TILES DETAIL
NO SCALE

FIRE PROTECTION SYSTEMS LEGEND

UNLESS NOTED OTHERWISE BELOW, A NEW AUTOMATIC WET-PIPE SPRINKLER SYSTEM SHALL BE INSTALLED THROUGHOUT THE ENTIRE BUILDING. THE NEW SYSTEM SHALL BE A LIGHT HAZARD AND HYDRAULICALLY DESIGNED TO PROVIDE A DENSITY OF 0.10 GPM/SQ. FT. OVER THE HYDRAULICALLY MOST REMOTE 1,500 SQUARE FEET. UTILIZE ORDINARY TEMPERATURE, QUICK-RESPONSE SPRINKLERS. SPRINKLERS SHALL BE SPACED TO PROVIDE A MAXIMUM COVERAGE OF 225 SQUARE FEET. PROVIDE A HOSE ALLOWANCE OF 100 GPM.

PROVIDE CONCEALED SPRINKLERS (WITH FLAT COVER PLATES) IN AREAS WITH SUSPENDED CEILINGS AND UPRIGHT SPRINKLERS IN AREAS WITH CEILINGS EXPOSED TO CONSTRUCTION. IN AREAS WITH CLOUD CEILINGS, SPRINKLERS PROTECTION SHALL BE PROVIDE ABOVE AND BELOW THE CLOUD. SPRINKLER PROTECTION LOCATED ABOVE CLOUDS SHALL BE IN ACCORDANCE WITH SECTION 8.15.23 OF THE 2013 EDITION OF NFPA 13.

AUTOMATIC WET PIPE SPRINKLER SYSTEM, ORDINARY HAZARD, GROUP 1, HYDRAULICALLY DESIGNED TO PROVIDE A DENSITY OF 0.15 GPM/SQ. FT. OVER THE HYDRAULICALLY MOST REMOTE 1,500 SQUARE FEET. SPRINKLERS SHALL BE SPACED TO PROVIDE A MAXIMUM COVERAGE OF 130 SQUARE FEET.

AUTOMATIC WET PIPE SPRINKLER SYSTEM, ORDINARY HAZARD, GROUP 2, HYDRAULICALLY DESIGNED TO PROVIDE A DENSITY OF 0.20 GPM/SQ. FT. OVER THE HYDRAULICALLY MOST REMOTE 1,500 SQUARE FEET. SPRINKLERS SHALL BE SPACED TO PROVIDE A MAXIMUM COVERAGE OF 130 SQUARE FEET.

AUTOMATIC DRY PIPE SPRINKLER SYSTEM, LIGHT HAZARD, HYDRAULICALLY DESIGNED TO PROVIDE A DENSITY OF 0.1 PM/SF OVER THE HYDRAULICALLY MOST REMOTE 1,950 SF. UTILIZE INTERMEDIATE TEMPERATURE, QUICK-RESPONSE SPRINKLERS SPACED TO PROVIDE A MAXIMUM COVERAGE OF 130 SF.

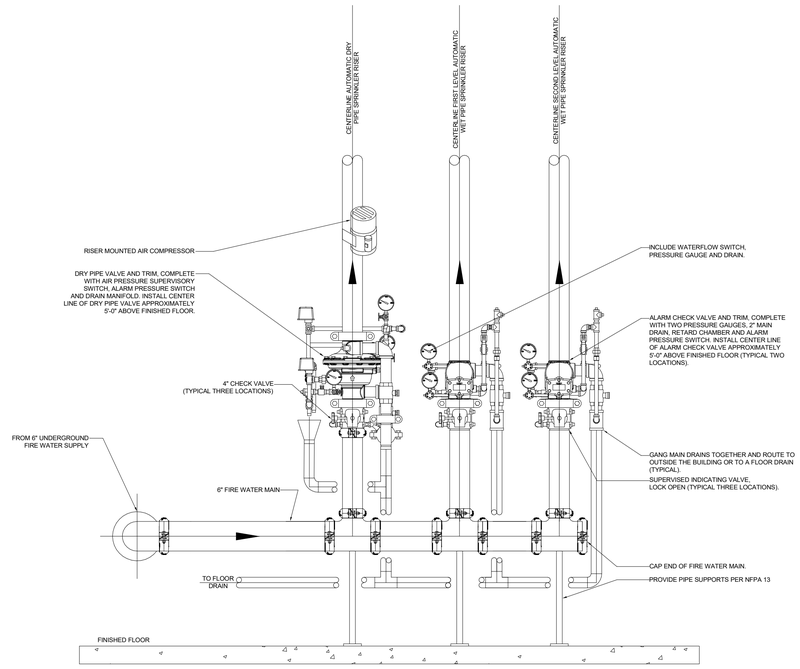

43 FP1.0 FIRE SYSTEM RISER
NO SCALE

FIRE PROTECTION PLAN GENERAL NOTES:
(TYPICAL FOR ALL FIRE PROTECTION SHEETS)

1. CONTRACTOR SHALL DESIGN AND PROVIDE SPRINKLER SYSTEM THROUGHOUT THE ENTIRE BUILDING PER THE REQUIREMENTS OF THE SPECIFICATIONS, APPLICABLE BUILDING CODES, AND THE AUTHORITY HAVING JURISDICTION.
2. THE DESIGN OF THE FIRE PROTECTION SYSTEM SHALL BE PERFORMED BY A LICENSED FIRE PROTECTION ENGINEER IN THE STATE OF OREGON.
3. CONTRACTOR SHALL OBTAIN A FLOW TEST OF THE UTILITY WATER SYSTEM PRIOR TO PREPARING DESIGN CALCULATIONS. MARGIN OF SAFETY FOR AVAILABLE WATER FLOW AND PRESSURE: GREATER OF 10 PERCENT OR 10-PSI, INCLUDING LOSSES THROUGH WATER-SERVICE PIPING, VALVES, AND BACKFLOW PREVENTERS.
4. CONTRACTOR SHALL OBTAIN A FIRE SUPPRESSION PERMIT FROM THE AUTHORITY HAVING JURISDICTION PRIOR TO COMMENCING ANY INSTALLATION ACTIVITIES.
5. ALL FIRE PROTECTION WORK SHALL BE IN ACCORDANCE WITH THE REQUIREMENTS OF NFPA 13, NFPA 14, AND ANI. SPRINKLER SYSTEM HAZARD CLASSIFICATIONS, DENSITIES AND DESIGN AREAS SHALL BE AS REQUIRED BY NFPA 13, THE LOCAL AUTHORITIES HAVING JURISDICTION, AND THE OWNER'S INSURANCE UNDERWRITER. COORDINATE ALL REQUIRED DENSITIES IN EACH AREA OF THE BUILDING.
6. THE FIRE PROTECTION PLAN AND EQUIPMENT SHOWN ARE DIAGRAMMATIC AND SHOWN FOR INFORMATION ONLY. THE FINAL DESIGN INCLUDING FLOW RATES, PIPE SIZES, ETC. SHALL BE DESIGNED BY THE FIRE PROTECTION CONTRACTOR'S FIRE PROTECTION ENGINEER.
7. THE AREAS OF THE BUILDING INDICATED SHALL BE PROVIDED WITH AN AUTOMATIC FIRE SPRINKLER SYSTEM. THE WORK INCLUDES PROVIDING A FULLY OPERATIONAL AUTOMATIC FIRE SPRINKLER SYSTEM INCLUDING MONITORING SYSTEM. COORDINATE THE CONNECTION OF ALL SUPERVISORY AND ALARM DEVICES ASSOCIATED WITH THE FIRE SPRINKLER SYSTEM WITH THE OWNER'S SECURITY SYSTEM PROVIDER AND/OR ELECTRICAL CONTRACTOR. THE FIRE SPRINKLER CONTRACTOR SHALL BE RESPONSIBLE FOR OBTAINING HIS OWN FLOW READINGS FOR PURPOSES OF DESIGN CALCULATIONS. BEFORE ANY SPRINKLER WORK BEGINS THE CONTRACTOR SHALL SUBMIT SCALED DRAWINGS INDICATING LOCATIONS OF SPRINKLER HEADS AND HOW THEY INTERFACE WITH CEILING TILES, LIGHTING FIXTURES, HVAC GRILLES, AND DIFFUSERS, ETC. ALL SPRINKLER HEADS SHALL BE CENTERED IN THE SHORT DIMENSION OF CEILING TILES. LAYOUT DRAWINGS SHALL ALSO INCLUDE, BUT NOT NECESSARILY BE LIMITED TO PIPE SIZES AND HANGER LOCATIONS, ELEVATIONS, AND SLOPES OF HORIZONTAL PIPING RUNS. COORDINATION OF PIPING WITH DUCTWORK, PIPING, ETC. AND HANGER LOCATIONS. DRAWINGS AND CALCULATIONS SHALL BEAR THE SEAL OF A REGISTERED PROFESSIONAL ENGINEER. THE SPRINKLER SYSTEM SHALL BE A COMPLETE SYSTEM AS REQUIRED BY LOCAL AUTHORITIES. SUBMIT TO THE AGENCY HAVING JURISDICTION FOR APPROVAL WITHIN 30 DAYS OF ISSUANCE OF A BUILDING PERMIT. SUBMIT ONE APPROVED COPY BEARING THE STAMP AND/OR SIGNATURE OF THE AGENCY HAVING JURISDICTION PRIOR TO PROCEEDING WITH INSTALLATION. NO FIRE SPRINKLER WORK SHALL BEGIN UNTIL FINAL SHOP DRAWINGS ARE APPROVED.
8. THE CONTRACTOR SHALL FIELD VERIFY ANY AND ALL EXISTING CONSTRUCTION PRIOR TO SUBMITTING HIS BID. NO EXTRAS WILL BE PAID DUE TO UNANTICIPATED EXISTING CONDITIONS THAT COULD HAVE BEEN EXAMINED PRIOR TO BID.
9. THE CONTRACTOR SHALL SCHEDULE AND EXECUTE ALL WORK WITH REGARD TO THE OWNERS USE OF THE BUILDING.
10. PLANS ARE DIAGRAMMATIC AND SHALL NOT BE SCALED. REFER TO THE ARCHITECTURAL DRAWINGS FOR DIMENSIONS. FIELD VERIFY ALL EXISTING DIMENSIONS.
11. THE CONTRACTOR SHALL SECURE AND PAY FOR ALL FEES, LICENSES, AND INSPECTIONS NECESSARY FOR THE COMPLETION OF THE PROJECT.
12. THE CONTRACTOR SHALL GUARANTEE ALL MATERIALS, EQUIPMENT, AND WORKMANSHIP FOR A MINIMUM OF ONE YEAR AFTER THE DATE OF ACCEPTANCE.
13. THE CONTRACTOR SHALL BE RESPONSIBLE FOR FULL COORDINATION OF HIS WORK WITH OTHER CONTRACTORS ON THE PROJECT. CONFLICTS WITH OTHER TRADES SHALL BE BROUGHT TO THE ATTENTION OF THE ARCHITECT/ENGINEER PRIOR TO INSTALLATION OF THE MATERIALS AND/OR EQUIPMENT.
14. THE CONTRACTOR SHALL BE RESPONSIBLE FOR INSTALLING A COMPLETE AND FUNCTIONAL SYSTEM REGARDLESS OF WHETHER OR NOT ALL ELEMENTS ARE SPECIFICALLY CALLED OUT.
15. THE CONTRACTOR SHALL BE RESPONSIBLE FOR ALL CUTTING AND PATCHING REQUIRED FOR THE INSTALLATION OF THE WORK. CUT NO STRUCTURAL MEMBERS WITHOUT APPROVAL BY THE ARCHITECT/ENGINEER ALL PATCHING SHALL MEET THE APPROVAL OF THE ARCHITECT/ENGINEER. MUTILATION OF BUILDING FINISHES CAUSED BY THE INSTALLATION OF THE WORK SHALL BE REPAIRED AT THE CONTRACTOR'S EXPENSE TO THE APPROVAL OF THE ARCHITECT/ENGINEER.
16. THE CONTRACTOR SHALL BE RESPONSIBLE FOR THE LOCATION OF PIPING HANGERS, SUPPORTS, INSERTS, ETC. INCLUDING ATTACHMENTS TO STRUCTURE FOR THE INSTALLATION OF THE PIPING UNDER THIS CONTRACT. DESIGN OF HANGERS AND SUPPORTS SHALL CONFORM TO NFPA 13.
17. INSTALL ALL PIPING CONCEALED WHERE POSSIBLE. RUN PIPING PARALLEL AND PERPENDICULAR TO BUILDING LINES. SUPPORT PIPING IN ACCORDANCE WITH INDUSTRY STANDARDS AND LOCAL CODES. ALL WALL AND FLOOR PENETRATIONS SHALL BE SLEEVED, CAULKED, AND PROVIDED WITH ESCUTCHEONS. AT PENETRATIONS THROUGH FIRE RATED CONSTRUCTION PROVIDE UL LISTED FIRE CAULKING AS REQUIRED BY RATING OF CONSTRUCTION. FLASH AND WEATHER SEAL ALL ROOF PENETRATIONS. DO NOT INSTALL PIPING ABOVE ELECTRICAL EQUIPMENT AND PROVIDE CLEARANCES AS REQUIRED BY THE NATIONAL ELECTRIC CODE.
18. THE CONTRACTOR SHALL CONTACT THE LOCAL WATER DEPARTMENT AND ARRANGE FOR FIRE SERVICE AS INDICATED ON THE DRAWINGS. INCLUDE ALL COSTS, CHARGES, FEES, ETC. INCURRED BY LOCAL AUTHORITIES FOR THE SERVICE INSTALLATION.
19. SEE THE SPECIFICATIONS FOR ADDITIONAL REQUIREMENTS
20. FIRE PROTECTION CONTRACTOR SHALL COORDINATE PIPELINE ROUTING WITH STRUCTURAL, ELECTRICAL, PLUMBING AND MECHANICAL. PROVIDE OFFSETS AS REQUIRED
21. ALL FIRE PIPELINES SHALL BE CONCEALED TO THE GREATEST EXTENT POSSIBLE. MAIN FIRE SYSTEM PIPELINES SHALL AVOID AREAS WITH EXPOSED STRUCTURE. BRANCH PIPELINES SHALL BE HELD CLOSELY TO STRUCTURE.
22. ANY PROPOSED FIRE LINE ROUTING SHOWN ON THIS DRAWING IS INTENDED TO PROVIDE GUIDANCE FOR LOCATION OF THE PIPELINE. THE ACTUAL DESIGN SHALL BE PERFORMED BY THE FIRE SPRINKLER CONTRACTOR.
23. FURNISH A CONSTRUCTION RECORD SET OF "AS-BUILTS" DOCUMENTS TO THE ARCHITECT REFLECTING ANY VARIANCES OF INSTALLED LOCATIONS OF EQUIPMENT CONTRARY TO THE CONSTRUCTION DOCUMENTS AFTER FINAL INSPECTION OF INSTALLED SYSTEMS.
24. COORDINATE PIPE ROUTING AWAY FROM ELECTRICAL PANELS. NO PIPELINES SHALL BE INSTALLED ABOVE ELECTRICAL, TELECOM AND ELEVATOR EQUIPMENT ROOMS.
25. PAINT ALL EXPOSED WATER PIPING USING RUST INHIBITOR PAINT. COLOR PER ARCHITECT. PROVIDE COLOR SAMPLE SUBMITTAL TO ARCHITECT AT SAME TIME AS FIRST MECHANICAL SUBMITTAL.
26. ALL LOCATIONS OF EXPOSED PIPING SHALL BE APPROVED BY ARCHITECT DURING SUBMITTAL PHASE.
27. CONTRACTOR SHALL PAY FOR ALL MATERIALS AND LABOR REQUIRED TO RELOCATE PIPING THAT HAS BEEN INSTALLED IN AREAS WHERE EXPOSED SPRINKLER PIPING IS NOT APPROVED. EXPOSED PIPING SHALL BE RUN PARALLEL TO WALLS AND STRUCTURAL ELEMENTS. PIPING RUNS SHALL BE RUN NEAT AND TIGHT TO STRUCTURE WHERE POSSIBLE. HIGHLIGHT ALL EXPOSED PIPING ON SHOP DRAWINGS.
28. ALL EXPOSED PIPING SERVING LOWERED SOFFITS AND CEILING SPACES SHALL BE RUN CONCEALED IN OTHER CONSTRUCTION WHERE POSSIBLE OR SHALL BE RUN TIGHT IN CORNERS AND TIGHT TO WALLS.

DELEGATED DESIGN: ALL FIRE PROTECTION DESIGN SHALL BE PROVIDED BY THE CONTRACTOR, INCLUDING COMPREHENSIVE ENGINEERING ANALYSIS BY A QUALIFIED PROFESSIONAL, USING PERFORMANCE REQUIREMENTS AND DESIGN CRITERIA INDICATED IN THE SPECIFICATIONS AND HEREIN. ALL PLANS AND CALCULATIONS SHALL BE SUBMITTED TO THE AHJ (DEFERRED SUBMITTAL) AND SHALL BE PREPARED BY A REGISTERED PROFESSIONAL ENGINEER, OR AS REQUIRED BY THE AHJ.

ALL INFORMATION SHOWN IN THESE PLANS IS SCHEMATIC IN NATURE AND IS INTENDED ONLY TO CONVEY DESIGN INTENT AND SCOPE OF WORK.

BID/PERMIT SET

CONDITIONAL USE NUMBER: CU2018-0016
DESIGN REVIEW NUMBER: DR2018-0114
SITE DEVELOPMENT PERMIT NUMBER: TBD
BUILDING PERMIT NUMBER: TBD

REGISTERED PROFESSIONAL ENGINEER
84086PE
DIGITAL SIGNATURE
OREGON
MARCH 9, 2018
CHRISTOPHER NARRAMORE
EXPIRES: 12/31/2020

Digitally signed by Chris Narramore
Date: 2019.03.14 08:59:24-07'00'

FIRE PROTECTION COVER SHEET AND DETAILS
ACMA
BEAVERTON SCHOOL DISTRICT

FP1.0
74-18109-00
03/14/2019
REVISIONS

DLR Group
Architecture Engineering Planning Interiors

© 2019, DLR Group Architecture & Engineering Inc., an Oregon corporation, ALL RIGHTS RESERVED

C:\Revit\74-18109-00_ACMA_MEP_2018_Central_smargolis.rvt
3/13/2019 9:37:56 PM

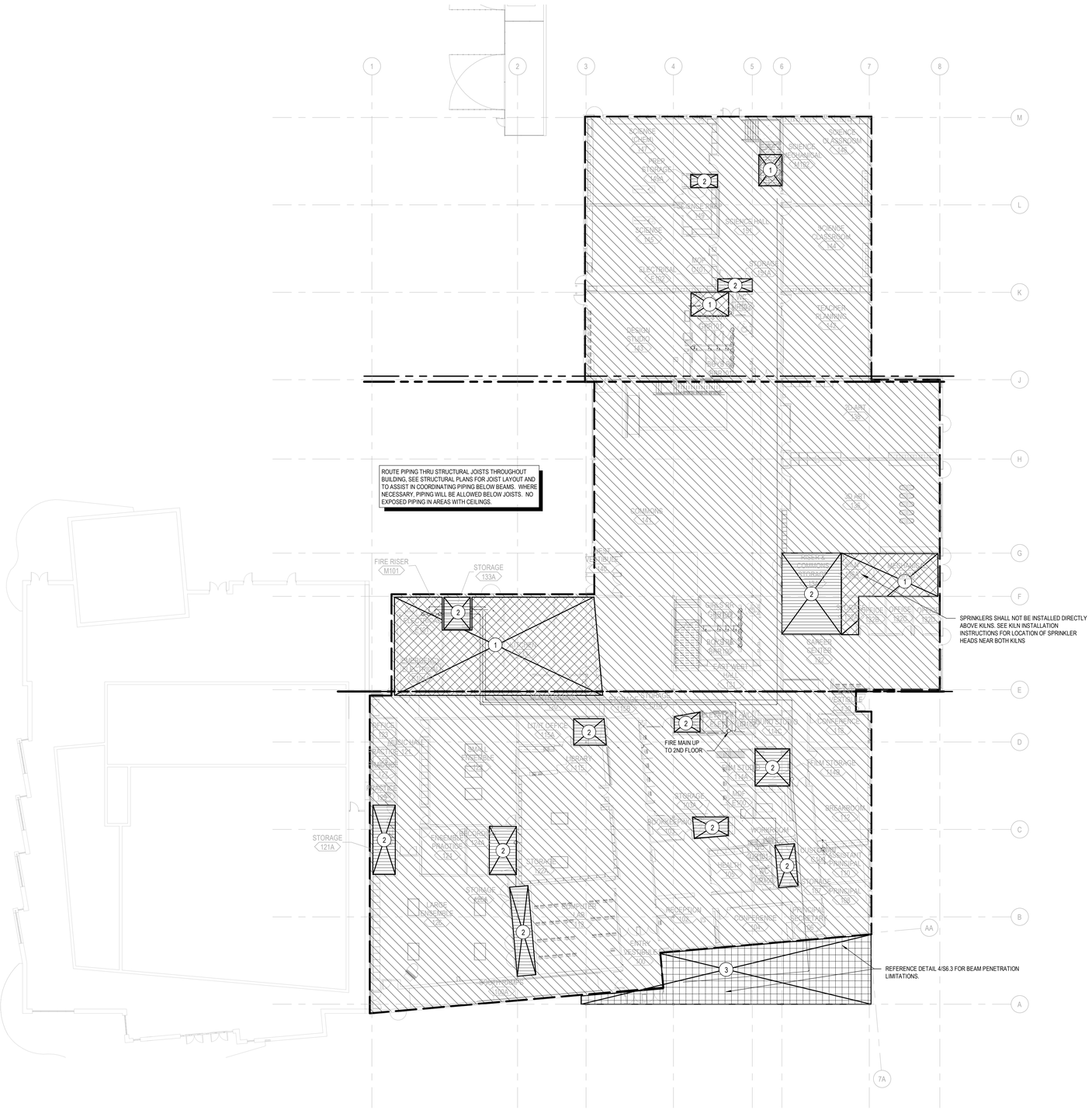

NORTH

FIRE PROTECTION PLAN - FIRST LEVEL

SCALE: 1" = 20'-0"

BID/PERMIT SET

CONDITIONAL USE NUMBER: CU2018-0016
DESIGN REVIEW NUMBER: DR2018-0114
SITE DEVELOPMENT PERMIT NUMBER: TBD
BUILDING PERMIT NUMBER: TBD

REGISTERED PROFESSIONAL ENGINEER
84086PE
DIGITAL SIGNATURE
OREGON
MARCH 9, 2010
CHRISTOPHER NARRAMORE

EXPIRES: 12/31/2020

Digitally signed by Chris Narramore
Date: 2019.03.14 08:59:35-07'00'

FIRE PROTECTION PLAN - FIRST LEVEL

ACMA

BEAVERTON SCHOOL DISTRICT

FP1.1

74-18109-00
03/14/2019
REVISIONS

DLR Group
Architecture Engineering Planning Interiors

© 2019, DLR Group Architecture & Engineering Inc., an Oregon corporation, ALL RIGHTS RESERVED

C:\Revit\74-18109-00_ACMA_MEP_2018_Central_smargolis.rvt
3/13/2019 9:38:02 PM

C:\Revit\74-18109-00_ACMA_MEP_2018_Central_smargolis.rvt
3/13/2019 9:38:08 PM

NORTH

FIRE PROTECTION PLAN - SECOND LEVEL

SCALE: 1" = 20'-0"

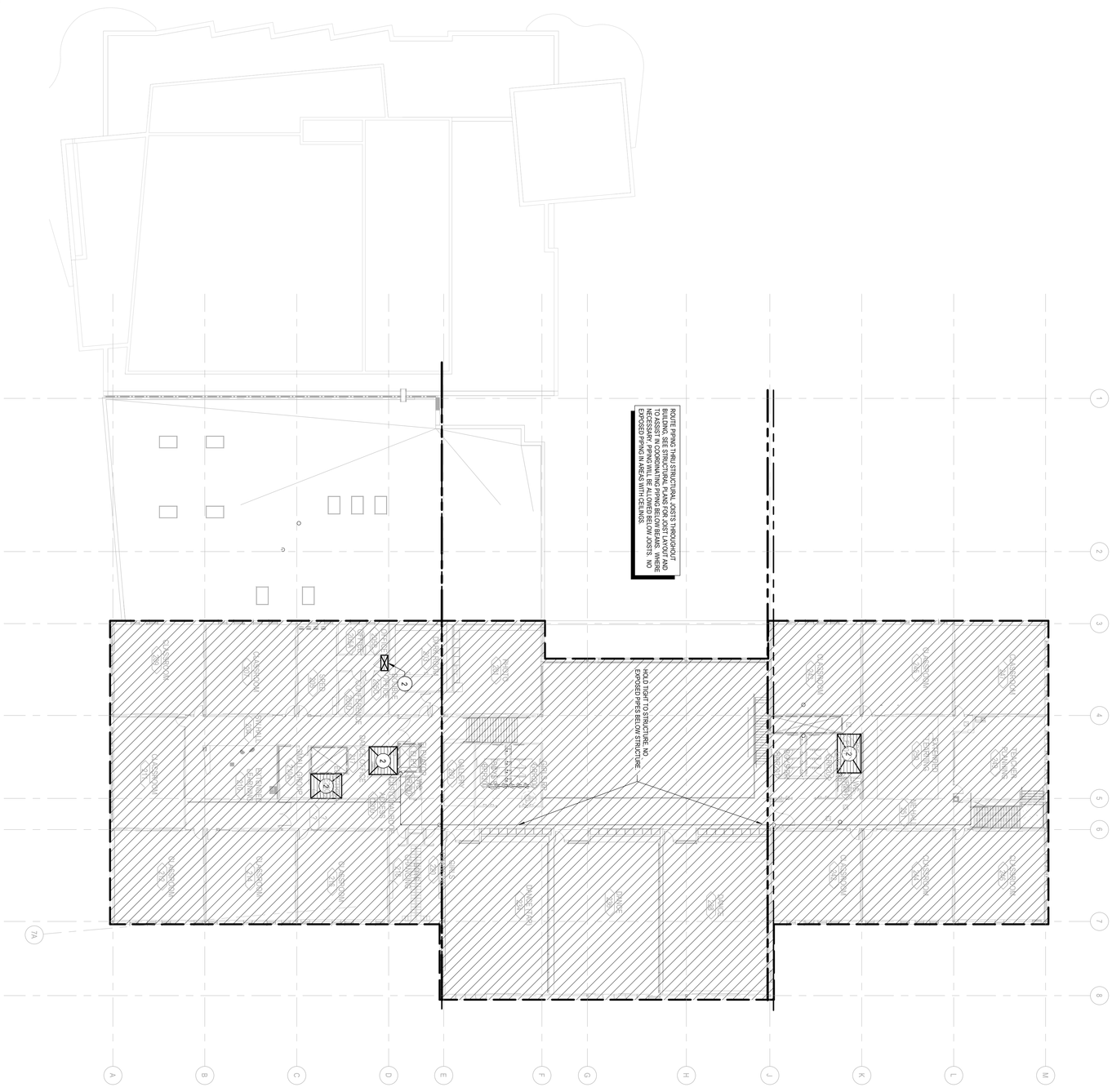

DLR Group
Architecture Engineering Planning Interiors

© 2019, DLR Group Architecture & Engineering inc., an Oregon corporation, ALL RIGHTS RESERVED

FP1.2
74-18109-00
03/14/2019
REVISIONS

FIRE PROTECTION PLAN - SECOND LEVEL
ACMA
BEAVERTON SCHOOL DISTRICT

REGISTERED PROFESSIONAL ENGINEER
DIGITAL SIGNATURE
OREGON
MARCH 9, 2018
CHRISTOPHER WARRAMORE
EXPIRES: 12/31/2020
Digitally signed by Chris Warramore
Date: 2018.03.14 08:59:46 -07'00'

BID/PERMIT SET

CONDITIONAL USE NUMBER: CU2018-0016
DESIGN REVIEW NUMBER: DR2018-0114
SITE DEVELOPMENT PERMIT NUMBER: TBD
BUILDING PERMIT NUMBER: TBD

ABBREVIATIONS

#	NUMBER
&	AND
@	AT
Ø	PHASE
A AMP	AMPERE
AC	ABOVE COUNTER
ACCU	AIR COOLED CONDENSING UNIT
ADA	AMERICANS WITH DISABILITY ACT
ADDN	ADDITION OR ADDITIONAL
AF	AMP FRAME (CIRCUIT BREAKER)
AFF	ABOVE FINISHED FLOOR
AFG	ABOVE FINISHED GRADE
AHJ	AUTHORITY HAVING JURISDICTION
AHU	AIR HANDLING UNIT
AIC	AMPERE INTERRUPTING CAPACITY
AL	ALUMINUM
ALT	ALTERNATE
ANSI	AMERICAN NATIONAL STANDARDS INSTITUTE
AP	WIRELESS ACCESS POINT
APPROX	APPROXIMATE
ARCH	ARCHITECTURAL
AT	AMP TRIP (CIRCUIT BREAKER OR FUSE)
ATS	AUTOMATIC TRANSFER SWITCH
AV	AUDIO-VIDEO
AWG	AMERICAN WIRE GAUGE
BAS	BUILDING AUTOMATION SYSTEM
BJ	BONDING JUMPER
BKR	BREAKER
BLDG	BUILDING
BMS	BUILDING MANAGEMENT SYSTEM
BSMT	BASEMENT
C	CONDUIT
CATV	CABLE TELEVISION
CB	CIRCUIT BREAKER
CCTV	CLOSED CIRCUIT TELEVISION
CFCI	CONTRACTOR FURNISHED CONTRACTOR INSTALLED
CKT	CIRCUIT
CL	CENTER LINE
CLG	CEILING
COMM	COMMUNICATIONS
CONC	CONCRETE
CONN(S)	CONNECTION(S)
CONST	CONSTRUCTION
CONT	CONTINUOUS
CONTR	CONTRACT(OR)
CP	COVER PLATE
CT	COOLING TOWER
CTR	CENTER
CU	COPPER
CU	CONDENSING UNIT
CUH	CABINET UNIT HEATER
D	DEPTH
DB	DECIBEL
DC	DIRECT CURRENT
DEG	DEGREE
DEMO	DEMOLISH OR DEMOLITION
DET	DETAIL
DIA	DIAMETER
DIM	DIMENSION
DISC	DISCONNECT
DIV	SPECIFICATION DIVISION
DN	DOWN
DP	DISTRIBUTION PANELBOARD
DW	DISHWASHER
DWG(S)	DRAWING(S)
E	EAST
EA	EACH
EC	ELECTRICAL CONTRACTOR
ECS	EMERGENCY COMMUNICATION SYSTEM
EL	ELEVATION
ELEC	ELECTRICAL
ELEV	ELEVATOR
EMD	ESTIMATED MAXIMUM DEMAND
ENG	ENGINEER
EP	EXPLOSION PROOF
EQ	EQUAL
EQUIP	EQUIPMENT
EQUIV	EQUIVALENT
ER	EXISTING (TO BE) RELOCATED
EWC	ELECTRIC WATER COOLER
EXIST	EXISTING
EXT	EXTERIOR
F.V.	FIELD VERIFY
FA	FIRE ALARM
FAA	FIRE ALARM ANNUNCIATOR
FACP	FIRE ALARM CONTROL PANEL
FC	FOOT CANDLE
FCU	FAN COIL UNIT
FIN	FINISHED
FL	FLOOR
FLA	FULL LOAD AMPS
FLUOR	FLUORESCENT
FS	FLOW SWITCH
FT	FEET
FUT	FUTURE
G	EQUIPMENT GROUNDING CONDUCTOR
GC	GENERAL CONTRACTOR
GEN	GENERATOR
GFCI	GROUND FAULT CIRCUIT INTERRUPTER
GND	EQUIPMENT GROUNDING CONDUCTOR
GOVT	GOVERNMENT
H	HEIGHT
HH	HANDHOLE
HOA	HAND-OFF-AUTOMATIC
HORIZ	HORIZONTAL
HP	HORSE POWER
HZ	HERTZ (FREQUENCY)
i.e.	THAT IS
IBC	INTERNATIONAL BUIDLING CODE
IC	INTERCOM
IES	ILLUMINATING ENGINEERING SOCIETY
IG	ISOLATED GROUND
IN	INCH
INT	INTERIOR
JB	JUNCTION BOX
KAIC	THOUSAND AMPERE INTERRUPTING CIRCUIT
KV	KILOVOLT
KVA	KILOVOLT AMPERES
KW	KILOWATT
LB(S)	POUND(S)
LT	LIGHT
LTG	LIGHTING
M	THOUSAND
MAX	MAXIMUM
MCA	MINIMUM CIRCUIT AMPACITY
MCB	MAIN CIRCUIT BREAKER
MCC	MOTOR CONTROL CENTER
MECH	MECHANICAL
MEZZ	MEZZANINE
MFR	MANUFACTURER
MH	MANHOLE
MIN	MINIMUM
MISC	MISCELLANEOUS
MLO	MAIN LUGS ONLY
MOCP	MAXIMUM OVERCURRENT PROTECTION
MRTS	MOTOR RATED TOGGLE SWITCH
MSB	MAIN SWITCHBOARD
MTD	MOUNTED
MTG	MOUNTING
MTS	MAIN TRANSFER SWITCH
N	NEUTRAL
N	NORTH
N.C.	NORMALLY CLOSED
N.O.	NORMALLY OPEN
N/A	NOT APPLICABLE
NEC	NATIONAL ELECTRIC CODE
NEMA	NATIONAL ELECTRICAL MANUFACTURERS ASSN.
NF	NON-FUSED
NIC	NOT IN CONTRACT
NL	NIGHT LIGHT
NTS	NOT TO SCALE
OC	ON CENTER
OFCI	OWNER FURNISHED CONTRACTOR INSTALLED
OPP	OPPOSITE
OVHD	OVERHEAD
P	POLE(S)
PA	PUBLIC ADDRESS
PAR	PARALLEL
PB	PULL BOX
PENT	PENTHOUSE
PERP	PERPENDICULAR
PH	PHASE
PIV	POST INDICATOR VALVE
PLYWD	PLYWOOD
PNL	PANEL
PWR	POWER
QTY	QUANTITY
RAD	RADIUS
RCP	REFLECTED CEILING PLAN
RECPT	RECEPTACLE
REF	REFERENCE
REQ(D)	REQUIRE(D)
REV	REVISION(S)
RM	ROOM
RND	ROUND
RTU	ROOF TOP UNIT
S	SOUTH
SCCR	SHORT CIRCUIT CURRENT RATING
SCHED	SCHEDULE
SD	SMOKE DAMPER
SEC	SECONDARY
SECT	SECTION
SHT	SHEET
SIM	SIMILAR
SPD	SURGE PROTECTION DEVICE
SPEC	SPECIFICATION(S)
STD	STANDARD
STL	STEEL
STOR	STORAGE
STRUCT	STRUCTURAL
SUSP	SUSPENDED
SWBD	SWITCHBOARD
SYM	SYMETRICAL
TBB	TELECOMMUNICATIONS BONDING BACKBONE
TC	TIME CLOCK
TEMP	TERMPORARY
TGB	TELECOMMUNICATIONS GRONDING BUSBAR
TMGB	TELECOMMUNICATIONS MAIN GRONDING BUSBAR
TO	TELECOMMUNICATIONS OUTLET
TR	TELECOMMUNICATIONS ROOM
TS	TAMPER SWITCH
TV	TELEVISION
TYP	TYPICAL
UG	UNDERGROUND
UL	UNDERWRITERS LABORATORIES
UNEX	UNEXCAVATED
UNFIN	UNFINISHED
UNO	UNLESS NOTED OTHERWISE
UTIL	UTILITY
UV	UNIT VENTILATOR
V	VOLT
VA	VOLT-AMPERE
VERT	VERTICAL
VEST	VESTIBULE
VFD	VARIABLE FREQUENCY DRIVE
VSMP	VARIABLE SPEED MOTOR CONTROLLER
W	WIRE
W	WEST
W	WATT
W/	WITH
W/O	WITHOUT
WA	TELECOMMUNICATIONS WORK AREA
WG	WIRE GUARD
WP	WEATHER-PROOF (NEMA 3R)
XFMR	TRANSFORMER

LIGHTING

- LIGHTING FIXTURE, SEE FIXTURE SCHEDULE
- LIGHTING FIXTURE ON EMERGENCY SYSTEM
- TRACK LIGHTING FIXTURE, SIZE PER FIXTURE SCHEDULE
- FLUORESCENT STRIP LIGHTING FIXTURE, SIZE PER FIXTURE SCHEDULE
- WALL MOUNTED FLUORESCENT STRIP LIGHTING FIXTURE
- CEILING FIXTURE, SURFACE, RECESSED OR PENDANT, SEE FIXTURE SCHEDULE
- LIGHTING FIXTURE ON EMERGENCY SYSTEM
- HIGH BAY LIGHTING FIXTURE
- WALL FIXTURE, BRACKET MOUNTED, SEE FIXTURE SCHEDULE
- SELF CONTAINED EMERGENCY LIGHTING FIXTURE
- EXIT SIGN, CEILING MOUNTED, DIRECTIONAL ARROW AS INDICATED
- EXIT SIGN, WALL MOUNTED, DIRECTIONAL ARROW AS INDICATED
- SITE LIGHTING - POLE
- POLE MOUNTED YOKE
- POLE MOUNTED AREA LIGHT
- WALL MOUNTED AREA LIGHT
- IN GRADE LIGHT FIXTURE, SEE FIXTURE SCHEDULE
- BOLLARD LIGHT FIXTURE

SWITCHES: MOUNT 42" AFF UNO

- SUPPERSCRIPT, SWITCH SHALL CONTROL FIXTURE DENOTED WITH SAME LOWER CASE LETTER
- SWITCH SYMBOL
- SUBSCRIPT, SWITCH TYPE - SEE BELOW
- LINE THRU SWITCH INDICATES A KEY OPERATED SWITCH

- S SWITCH, SINGLE POLE
- S_2 SWITCH, DOUBLE POLE
- S_3 SWITCH, THREE WAY
- S_4 SWITCH, FOUR WAY
- S_D SWITCH, DIMMER
- S_E SWITCH, EMERGENCY
- S_{LV} SWITCH, LOW VOLTAGE, MULTI-BUTTON TYPE, DLM SYSTEM
- S_M SWITCH, MASTER
- S_{OS} SWITCH, WALL-BOX OCCUPANCY SENSOR
- S_{O2} SWITCH, WALL-BOX OCCUPANCY SENSOR, 2-POLE
- S_P SWITCH, WITH PILOT LIGHT
- S_R SWITCH, LOW VOLTAGE, ASSOCIATED WITH RELAY PANEL
- S_T SWITCH, TIMER
- S_V SWITCH, WALL-BOX VACANCY SENSOR
- S_X SWITCH, EXPLOSION-PROOF

COMMUNICATIONS

- TELEPHONE OUTLET, WALL
- W TELEPHONE OUTLET FOR WALL-MOUNTED PHONE
- P PAY TELEPHONE OUTLET
- TELEPHONE CABINET (PBX)
- TELEPHONE BACKBOARD, SIZE AS SHOWN
- TECHNOLOGY OUTLET, WALL (VOICE, DATA, VIDEO)
- MM MULTI-MEDIA TECHNOLOGY OUTLET, WALL
- SB SMART-BOARD TECHNOLOGY OUTLET, WALL
- C TECHNOLOGY OUTLET, CEILING (MULTI-MEDIA)
- FLUSH FLOOR BOX WITH TECHNOLOGY OUTLET
- MM FLUSH FLOOR BOX WITH TWO (2) TECHNOLOGY OUTLETS (MULTI-MEDIA)
- CLOCK
- M CLOCK - MASTER
- DS CLOCK - DOUBLE FACE
- C CLOCK - OUTLET
- TC TIME CLOCK
- S SPEAKER, WALL (GENERAL)
- S SPEAKER, CEILING (GENERAL)
- S AV SPEAKER, WALL (AUDIO VISUAL)
- S AV SPEAKER, CEILING (AUDIO VISUAL)
- H SPEAKER/HORN, WALL
- IC INTERCOM CALLBACK STATION, WALL
- V VOLUME CONTROL, WALL
- M MICROPHONE CONTROL, WALL
- SR MONITOR SPEAKER RECEPTACLE, WALL

- TV TELEVISION OUTLET, WALL
- TV TELEVISION OUTLET, CEILING
- TV TELEVISION TERMINAL CABINET
- BUZZER
- C CHIME
- M FLUSH FLOOR BOX WITH MICROPHONE OUTLET
- D DIRECTOR'S HEADSET, WALL
- AV AUDIO VISUAL CONNECTION, WALL
- AV MB AUDIO VISUAL MIXER BOARD, WALL
- AV RL AUDIO VISUAL RECORD LIGHT, WALL
- AV TBK AUDIO VISUAL TALKBACK BUTTON, WALL
- CP AUDIO VISUAL CONTROL PANEL, WALL
- TS AUDIO VISUAL TEACHER STATION, WALL
- PV AUDIO VISUAL PLENUM VAULT, WALL
- PV AUDIO VISUAL PLENUM VAULT, CEILING
- CM AUDIO VISUAL CEILING MOUNT, PROJECTOR
- AV PS AUDIO VISUAL PROJECTOR STATION, WALL
- AV LCD AUDIO VISUAL LCD, WALL
- S AV2 SPEAKER, CEILING (AUDIO VISUAL)
- S AV3 PENDANT MOUNTED 70V LOUD SPEAKER, CEILING (AUDIO VISUAL)
- M MICROPHONE, CEILING (AUDIO VISUAL)

SECURITY

- ID INTRUSION DETECTOR, WALL
- ID INTRUSION DETECTOR, CEILING
- C MAGNETIC CONTACT
- SSP SECURITY SYSTEM PANEL
- ACP ACCESS CONTROL SYSTEM CONTROL PANEL
- DCP DOOR CONTROL PANEL

- XXX VIDEO CAMERA - CEILING
- ES ELECTRIC STRIKE
- CR CARD READER JAMB MOUNT OR WALL MOUNT 36-INCHES AFF
- EL ELECTRIFIED HARDWARE - INCLUDES 120V OR 24V INPUT, REQUEST-TO-EXIT SENSOR, DOOR POSITION SWITCHES, ALL ELECTRIFIED ACCESS CONTROL AND DOOR HARDWARE, AND ALL ASSOCIATED ROUGH-IN. SEE ELECTRICAL DETAILS SHEETS. REFER TO DOOR HARDWARE SPECIFICATIONS.

POWER

- CIRCUIT HOME RUN
- CONDUIT TURNING UP
- CONDUIT TURNING DOWN
- CONDUIT STUB-UP
- CONDUIT SLEEVE
- CONDUIT SEAL
- CONDUIT CONCEALED IN CEILING OR WALLS, POWER
- CONDUIT CONCEALED IN CEILING OR WALLS, OTHER (* = SEE ABBREVIATIONS)
- CONDUIT CONCEALED IN FLOOR OR UNDERGROUND, POWER
- CONDUIT CONCEALED IN FLOOR OR UNDERGROUND, OTHER (* = SEE ABBREVIATIONS)
- EXPOSED CONDUIT, POWER
- EXPOSED CONDUIT, OTHER (* = SEE ABBREVIATIONS)
- T TRANSFORMER
- XXX BRANCH CIRCUIT PANEL BOARD
- XXX DISTRIBUTION PANEL BOARD
- EQUIPMENT CABINET, AS NOTED
- XXX SWITCHBOARD
- CT CURRENT TRANSFORMER ENCLOSURE
- M METER
- GEN GENERATOR
- ATS AUTOMASTIC TRANSFER SWITCH
- SYSTEM GROUND ELECTRODE
- T THERMOSTAT
- MUSHROOM
- MH ELECTRICAL MANHOLE
- HH ELECTRICAL HANDHOLE
- M MOTOR CONNECTION, HORSEPOWER AS INDICATED
- S_F MANUAL SWITCH, WITH FUSE
- S_T MANUAL SWITCH, WITH THERMAL OVERLOAD
- MAGNETIC MOTOR STARTER
- DISCONNECT SWITCH, WITH FUSE
- NF DISCONNECT SWITCH, WITHOUT FUSE
- COMBINATION MOTOR STARTER
- R RELAY
- PC PHOTOELECTRIC CELL
- SWITCH, PUSH BUTTON, SINGLE
- SWITCH, PUSH BUTTON, DOUBLE
- SWITCH, PUSH BUTTON, TRIPLE
- J JUNCTION BOX, CEILING
- JUNCTION BOX ABOVE SUSPENDED CEILING WITH FLEX CONNECTION
- J FLUSH JUNCTION BOX, WALL MOUNTED
- J SURFACE JUNCTION BOX, CEILING MOUNTED
- J SURFACE JUNCTION BOX, WALL MOUNTED
- PB PULL BOX
- EQUIPMENT CONNECTION
- EQUIPMENT CONNECTION
- U USB ONLY RECEPTACLE
- U RECEPTACLE WITH USB PORTS
- H HAND DRYER, INSTALL HAND DRYER SPECIFIED IN DIV. 11

RECEPTACLES

DIAGONAL LINE THROUGH SYMBOL OR DENOTED 'AC' INDICATES MOUNT DEVICE ABOUT COUNTER. WHERE INDICATED AS 'MOUNT ABOVE COUNTER' MOUNT BOTTOM OF BOX 2" ABOVE TOP OF BACKSPLASH OR 6" ABOVE COUNTERTOP IF NO BACKSPLASH EXISTS.

- SIMPLEX RECEPTACLE
- DUPLEX RECEPTACLE
- DUPLEX RECEPTACLE, GFI TYPE
- DUPLEX RECEPTACLE, MOUNT ABOVE COUNTER
- DUPLEX RECEPTACLE, GFI TYPE, MOUNT ABOVE COUNTER
- FOURPLEX RECEPTACLE
- FOURPLEX RECEPTACLE, GFI TYPE
- FOURPLEX RECEPTACLE, MOUNT ABOVE COUNTER
- FOURPLEX RECEPTACLE, GFI TYPE, MOUNT ABOVE COUNTER
- DUPLEX RECEPTACLE, FLUSH IN CEILING
- CR RETRACTABLE CORD REEL, CEILING MOUNTED
- DUPLEX RECEPTACLE, HORIZONTALLY MOUNTED
- DUPLEX RECEPTACLE, HORIZ. MTD, GFI TYPE
- DUPLEX RECEPTACLE, HORIZ. MTD, MOUNT ABOVE COUNTER
- DUPLEX RECEPTACLE, HORIZ. MTD, GFI TYPE, MOUNT ABOVE COUNTER
- R WEATHER RESISTANT GFI DUPLEX RECEPTACLE, ROOF MOUNT 18" ABOVE ADJACENT STRUCTURE WITH A WEATHERPROOF, IN-USE COVER
- WP WEATHER RESISTANT GFI DUPLEX RECEPTACLE, MOUNT 18" AFF WITH A WEATHERPROOF, IN-USE COVER
- EWC DUPLEX RECEPTACLE TO SERVE ELECTRIC WATER COOLER, MOUNT AT HEIGHT PER EQUIPMENT MANUFACTURER'S INSTALLATION GUIDELINES
- TV DUPLEX RECEPTACLE TO SERVE TELEVISION, MOUNT AT SAME HEIGHT AND WITHIN 8" OF ADJACENT TV OUTLET
- D DUPLEX RECEPTACLE WITH DEDICATED CIRCUIT. LABEL ON FACEPLATE "DEDICATED CIRCUIT". SEE SPECIFICATION 260553.
- DUPLEX RECEPTACLE, EMERGENCY
- FOURPLEX RECEPTACLE, EMERGENCY
- FOURPLEX RECEPTACLE, TWO DEDICATED CIRCUITS, ONE PER DUPLEX. LABEL ON FACEPLATE "DEDICATED". SEE SPECIFICATION 260553.
- DUPLEX RECEPTACLE, LOWER SWITCHED
- DUPLEX RECEPTACLE, SWITCHED
- RANGE RECEPTACLE
- A SPECIAL RECEPTACLE (MARK INDICATES OUTLET IN SCHEDULE)
- FLUSH FLOOR OUTLET BOX
- FLUSH FLOOR BOX WITH DUPLEX RECEPTACLE
- FLUSH FLOOR BOX WITH FOURPLEX RECEPTACLE
- MULTIDEVICE FLOOR BOX WITH DUPLEX AND DATA OUTLETS, DIVIDED 2 GANG BOX WITH SINGLE GANG PLASTER RING
- MULTI-RECEPTACLE STRIP, SPACING AS INDICATED
- DIVIDED RACEWAY

SAFETY

- FACP FIRE ALARM CONTROL PANEL
- FAA FIRE ALARM ANNUNCIATOR PANEL
- NAC N.A.C. EXTENDER PANEL
- F MANUAL FIRE ALARM PULL STATION
- F FIRE ALARM BELL
- F FIRE ALARM HORN
- F FIRE ALARM VISUAL WARNING SIGNAL
- F FIRE ALARM BELL, WITH VISUAL WARNING SIGNAL
- F FIRE ALARM HORN, WITH VISUAL WARNING SIGNAL
- F MINI FIRE ALARM HORN, WITH VISUAL WARNING SIGNAL
- F FIRE ALARM SPEAKER, WITH VISUAL WARNING SIGNAL
- F FIRE ALARM SPEAKER, FLUSH IN CEILING
- F FIRE ALARM SPEAKER, WITH VISUAL WARNING SIGNAL, CEILING
- F FIRE ALARM VISUAL WARNING SIGNAL, CEILING
- E ECS SPEAKER, FLUSH IN CEILING
- E ECS SPEAKER, WITH VISUAL WARNING SIGNAL, CEILING
- E ECS VISUAL WARNING SIGNAL, CEILING

- D SMOKE DETECTOR - IONIZATION TYPE (D=DUCT)
- PD SMOKE DETECTOR - PHOTOELECTRIC TYPE (D=DUCT)
- I SMOKE DETECTOR - IONIZATION TYPE
- P SMOKE DETECTOR - PHOTOELECTRIC TYPE
- HEAT DETECTOR RATE-OF-RISE AND FIXED TEMPERATURE, 135°F
- HEAT DETECTOR RATE-OF-RISE AND FIXED TEMPERATURE, 200°F
- HEAT DETECTOR FIXED TEMPERATURE ONLY, 135°F
- HEAT DETECTOR FIXED TEMPERATURE ONLY, 200°F
- S SPRINKLER SYSTEM ELECTRONIC BELL ALARM
- D FIRE ALARM MAGNETIC DOOR HOLDER
- L REMOTE INDICATOR LAMP
- OSY OS&Y VALVE
- FS WATER FLOW ALARM SWITCH
- TS TAMPER SWITCH
- PIV POST INDICATOR VALVE SWITCH
- T BEAM TRANSMITTER
- R BEAM RECEIVER
- FF FIRE FIGHTER'S TELEPHONE
- DISTRIBUTED ANTENNA (CEILING)

BID/PERMIT SET

CONDITIONAL USE NUMBER: CU2018-0016
DESIGN REVIEW NUMBER: DR2018-0314
SITE DEVELOPMENT PERMIT NUMBER: TBD
BUILDING PERMIT NUMBER: TBD

REGISTERED PROFESSIONAL ENGINEER
86828PE
OREGON
JULY 10, 2012
ANNA STEPHENS
EXPIRES: 6/30/2020
03/13/19

ELECTRICAL SYMBOLS & ABBREVIATIONS
ACMA
BEAVERTON SCHOOL DISTRICT

E0.0
74-18109-00
03/14/2019
REVISIONS

DLR Group
Architecture Engineering Planning Interiors

© 2019, DLR Group Architecture & Engineering Inc., an Oregon corporation. ALL RIGHTS RESERVED

C:\Revit\74-18109-00_ACMA_MEP_2018_Central_ostephens.rvt
3/13/2019 5:01:13 PM

DEMO ELECTRICAL SERVICE RESPONSIBILITY					
	ELEC. CONTR.	POWER CO.		ELEC. CONTR.	POWER CO.
DEMO PRIMARY CONDUIT	☑	☐	DEMO SECONDARY CONDUIT	☑	☐
DEMO PRIMARY CONDUCTORS	☐	☑	DEMO SECONDARY CONDUCTORS	☐	☑
DEMO TRANSFORMER	☐	☑	DEMO C/T CABINET	☑	☐
DEMO TRANSFORMER VAULT	☑	☐	DEMO CT's	☐	☑
DEMO BOLLARDS	☑	☐	DEMO METER BASE	☑	☐
DEMO TRANSFORMER CONNECTIONS	☐	☑	DEMO METER	☐	☑

NOTES:
1. COORDINATE ALL REQUIREMENTS WITH SERVING UTILITIES PRIOR TO SUBMITTING BID.

POWER UTILITY CONTACT:	DATA UTILITY CONTACT:-	PHONE UTILITY CONTACT:
JAMES KRUEGER, PGE	MARGARET PORTER, COMCAST	JERRY MOORE, FRONTIER COMMUNICATIONS
PHONE: 503-672-5464	PHONE: 971-801-5709	PHONE:
EMAIL: JAMES.KRUEGER@PGN.COM	EMAIL: MARGARET_PORTER@COMCAST.COM	EMAIL: JERRY.MOORE@FTR.COM

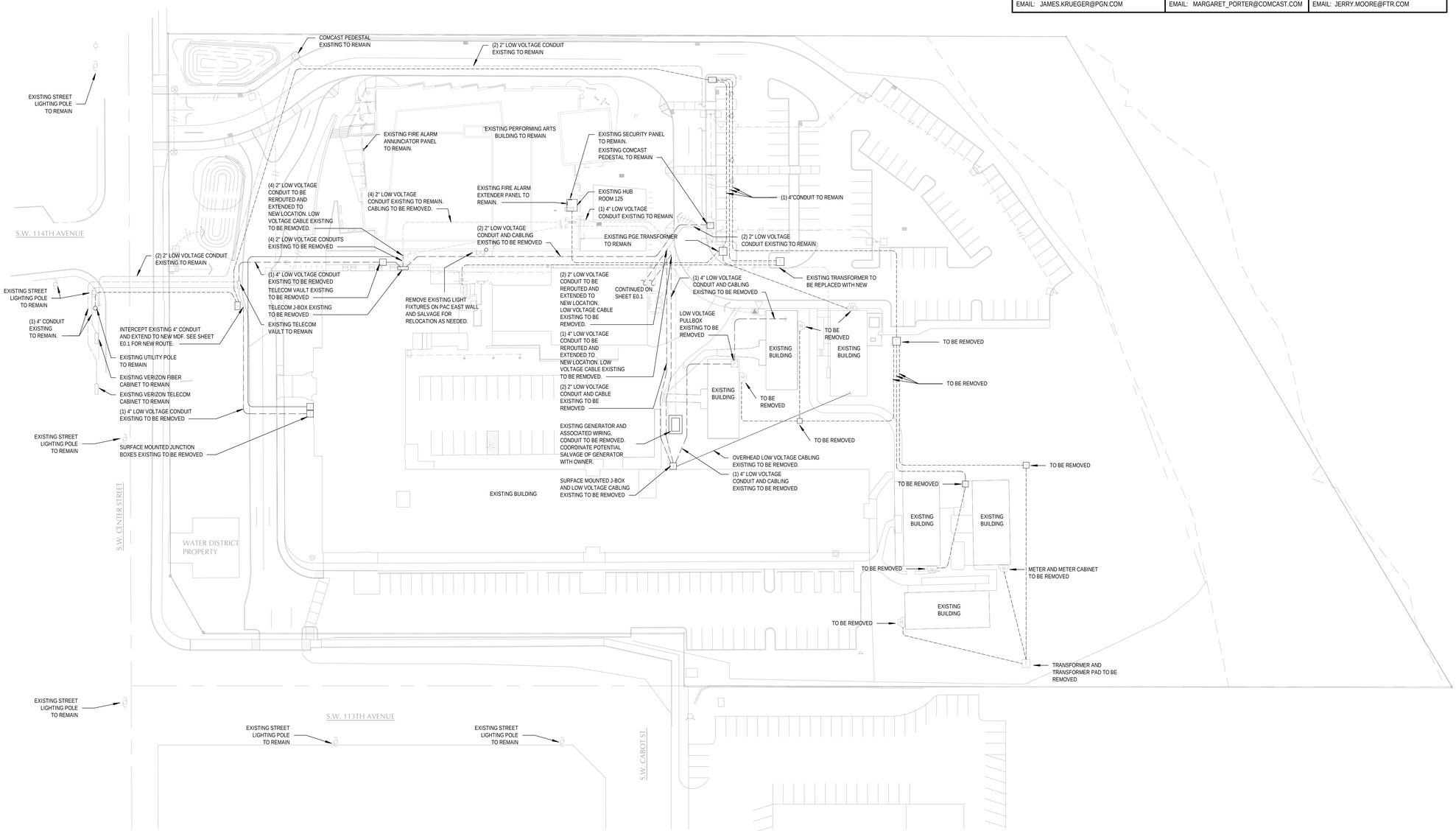

ELECTRICAL DEMO SITE PLAN

NORTH

SCALE: 1" = 40'-0"

LEGEND NOTES

LEGEND NOTES ARE COMMON TO ALL
SOME NOTES MAY NOT APPLY TO THIS SHEET

BID/PERMIT SET

CONDITIONAL USE NUMBER: CU2018-0016
DESIGN REVIEW NUMBER: DR2018-0314
SITE DEVELOPMENT PERMIT NUMBER: TBD
BUILDING PERMIT NUMBER: TBD

REGISTERED PROFESSIONAL ENGINEER
86828PE
OREGON
JULY 10, 2012
ONNA STEPHENS
EXPIRES: 6/30/2020

DEMO ELECTRICAL SITE PLAN
ACMA
BEAVERTON SCHOOL DISTRICT

DE0.1
74-18109-00
03/14/2019
REVISIONS

DLR Group
Architecture Engineering Planning Interiors

©2019, DLR Group Architecture & Engineering Inc., an Oregon corporation, ALL RIGHTS RESERVED

C:\Revit\74-18109-00_ACMA_MEP_2018_Central_cstephens.rvt
3/13/2019 11:20:40 PM

ELECTRICAL SERVICE RESPONSIBILITY					
	ELEC. CONTR.	POWER CO.		ELEC. CONTR.	POWER CO.
PRIMARY CONDUIT	☑	☐	SECONDARY CONDUIT	☑	☐
PRIMARY CONDUCTORS	☐	☑	SECONDARY CONDUCTORS	☐	☑
TRANSFORMER	☐	☑	C/T CABINET	☑	☐
TRANSFORMER VAULT	☑	☐	C/T's	☐	☑
BOLLARDS	☑	☐	METER BASE	☑	☐
TRANSFORMER CONNECTIONS	☐	☑	METER	☐	☑

NOTES:
1. COORDINATE ALL REQUIREMENTS WITH SERVING UTILITIES PRIOR TO SUBMITTING BID.

POWER UTILITY CONTACT:	DATA UTILITY CONTACT::	PHONE UTILITY CONTACT:
JAMES KRUEGER, PGE	MARGARET PORTER, COMCAST	JERRY MOORE, FRONTIER COMMUNICATIONS
PHONE: 503-672-5464	PHONE: 971-801-5709	PHONE:
EMAIL: JAMES.KRUEGER@PGN.COM	EMAIL: MARGARET_PORTER@COMCAST.COM	EMAIL: JERRY.MOORE@FTR.COM

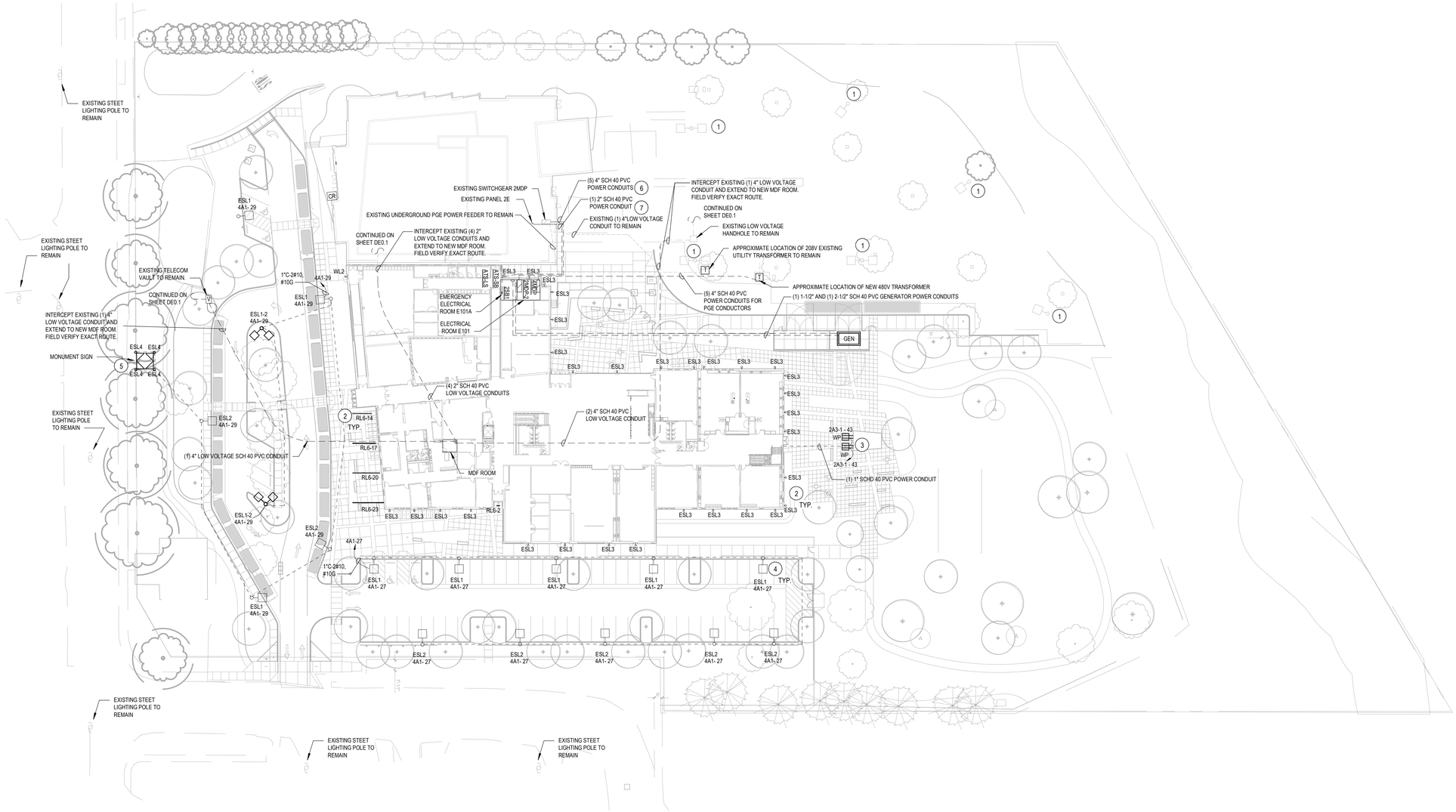

LEGEND NOTES

LEGEND NOTES ARE COMMON TO ALL
SOME NOTES MAY NOT APPLY TO THIS SHEET

KEYED NOTES

1. EXISTING POLE LIGHT FIXTURES TO REMAIN.

2. BUILDING MOUNTED EXTERIOR FIXTURES SHOWN FOR REFERENCE. CIRCUITING INFORMATION PROVIDED ON SHEETS E1.1A-E1.1C.

3. PROVIDE WEATHERPROOF, GFCI RECEPTACLES MOUNTED ONTO CONCRETE STAGE AT 6" AFF.

4. SEE E6.1 AND L6.3 FOR SITE POLE MOUNTING DETAILS.

5. GROUND STAKE MOUNT ESL4 FIXTURES, 3' NORTH AND 3' SOUTH OF MONUMENT SIGN, AND IN LINE WITH EDGES OF SIGN. PROVIDE EXACT DIMENSIONS AND LIGHTING CALCULATIONS IN SHOP DRAWINGS. FIELD ADJUST FOR FINAL AIMING AT SIGN.

6. PROVIDE FEEDER FROM EXISTING SWITCHBOARD 2MDP TO FEED NEW SWITCHBOARD 2MDP-2. FIELD COORDINATE EXACT FEEDER ROUTE INSIDE AND OUTSIDE ELECTRICAL ROOM IN PAC BUILDING. SEE ONE-LINE DIAGRAMS FOR FEEDER SIZE ON SHEET E5.2 AND E5.3.

7. PROVIDE FEEDER FROM NEW PANEL 2SB1 TO FEED EXISTING PANEL 2E. FIELD COORDINATE EXACT FEEDER ROUTE INSIDE AND OUTSIDE ELECTRCAL ROOM IN PAC BUILDING. SEE ONE-LINE DIAGRAMS FOR FEEDER SIZE ON SHEET E5.2 AND E5.3.

BID/PERMIT SET

CONDITIONAL USE NUMBER: CU2018-0016
DESIGN REVIEW NUMBER: DR2018-0114
SITE DEVELOPMENT PERMIT NUMBER: TBD
BUILDING PERMIT NUMBER: TBD

REGISTERED PROFESSIONAL ENGINEER
86828PE
OREGON
JULY 10, 2012
CHAD STEPHENS
EXPIRES: 6/30/2020
03/13/19

ELECTRICAL SITE PLAN
ACMA
BEAVERTON SCHOOL DISTRICT

E0.1
74-18109-00
03/14/2019
REVISIONS

DLR Group
Architecture Engineering Planning Interiors

©2019, DLR Group Architecture & Engineering inc., an Oregon corporation, ALL RIGHTS RESERVED

C:\Revit\74-18109-00_ACMA_MEP_2018_Central_p_raghu.rvt
3/13/2019 4:30:48 PM



LIGHTING CONTROL INTENT PLAN, LEVEL 1

SCALE: 1/16" = 1'-0"

NORTH

General	Specfic Rm#	Turn-on	Operating hours	Turn-off
All Spaces		If a fire alarm or intrusion alarm occurs all lights come to normal function so on or on occ sensors.		
Entries	100, 130,140	Lights in the entry vestibules come on when the card is swiped and granted premission to enter. Once the building is disarmed all circulation spaces are turned on to 25%	Same as Corridors/ Circulation	Once the building is armed lights cycle off after 10mins
Corridors & Circulation Spaces		Once the building is disarmed lights operate on occupancy sensors.	Lighting is controlled by Occupancy Sensors. Lights are 25% when spaces are unoccupied, 100% when spaces are occupied. Also key switches in corridors can override the occupancy sensors.	Once the building is armed lights cycle off after 10mins
Classrooms	142-147, 136, 138, 113, 114,122, 126, 242-247, 249, 201,203-211 (odd), 212-216 (even), 234-238 (even)	Once the building is disarmed lights operate on occupancy sensors and photo cells and manual dimmers/switches.	Once occupancy is detected occupancy sensor in the room will turn on lights. Occupancy sensor can be programmed as vacancy sensor so lights are turned ON manually by teacher instead of occupancy sensor. There is rocker at the door and 4 button scene switch with rocker at the presentation location(teacher's desk) Rocker turns all light on/off and can dim all lights. At the presentation location scenes are 1. All on 2. All off 3. Presentation Mode; c1+c2 'OFF' others to 25% 4. Whiteboard; c1 + c2 'ON' 50% others 0% Rocker dims all lights	When the rooms is un-occupied for 10 mins lights cycle off When the building arms, classroom lights cycle off
Extended Learning	210, 250	Once the building is disarmed lights operate on occupancy sensors and photo cells and manual dimmers/switches.	Lights can be over riden by a dimming switch by the door. Occupancy sensor can be programmed as vacancy sensor so lights are turned ON manually by teacher instead of occupancy sensor.	When the rooms is un-occupied for 10 mins lights cycle off When the building arms, classroom lights cycle off
Offices	132B,132C,132D, 106-112 (even), 102,103,105,109, 114A, 114B, 115A, 123-129 (odd), 124,124A, 132, 149, 205A-205C, 217	Once the building is disarmed lights operate on occupancy sensors and photo cells and manual dimmers/switches.	Once occupancy is detected occupancy sensor in the room will turn on lights. However they can be over riden by the user. The user has the ability to turn lights on/off and dimm them up and down at button station near the door. Occupancy sensor can be programmed as vacancy sensor so lights are turned ON manually by teacher instead of occupancy sensor.	When the rooms is un-occupied for 30 mins lights cycle off When the building arms, lights cycle off
Conference Rooms	104,118, 205D, 210A	Once the building is disarmed lights operate on occupancy sensors and manual dimmers/switches.	Once occupancy is detected occupancy sensor in the room will turn on lights. However they can be over riden by the user. The user has the ability to turn lights on/off at button station near the door. Occupancy sensor can be programmed as vacancy sensor so lights are turned ON manually by teacher instead of occupancy sensor.	When the rooms is un-occupied for 10 mins lights cycle off When the building arms, lights cycle off
Kitchen	133	Once the building is disarmed lights operate on occupancy sensors.	There are two button stations ON/OFF in the kitchen if the lights need to be over riden	When the rooms is un-occupied for 10 mins lights cycle off When the building arms, lights cycle off
Commons	141	Once the building is disarmed lights operate on occupancy sensors and photo cells.	There are (2) 4 scene buttons, one outside storage 141A on main level and one at upper level dance balcony south end. Adjacent to each scene button is a rocker that can override to these scenes. 1. All on/off 2. Presentation, d off all others to 25% 3. All off, b 25% 4. Only a and c on 5. All dim	When the rooms is un-occupied for 10 mins lights cycle off When the building arms, lights cycle off

BID/PERMIT SET

CONDITIONAL USE NUMBER: CU2018-0016
DESIGN REVIEW NUMBER: DR2018-0114
SITE DEVELOPMENT PERMIT NUMBER: TBD
BUILDING PERMIT NUMBER: TBD

REGISTERED PROFESSIONAL ENGINEER
86828PE
OREGON
JULY 10, 2012
CANA STEPHENS
EXPIRES: 6/30/2020
03/13/19

LIGHTING CONTROL INTENT PLAN, LVL 1

ACMA

BEAVERTON SCHOOL DISTRICT

E0.2
74-18109-00
03/14/2019
REVISIONS

DLR Group
Architecture Engineering Planning Interiors

©2019, DLR Group Architecture & Engineering Inc., an Oregon corporation, ALL RIGHTS RESERVED

C:\Revit\74-18109-00_ACMA_MEP_2018_Central_p_raghu.rvt
3/13/2019 4:30:50 PM

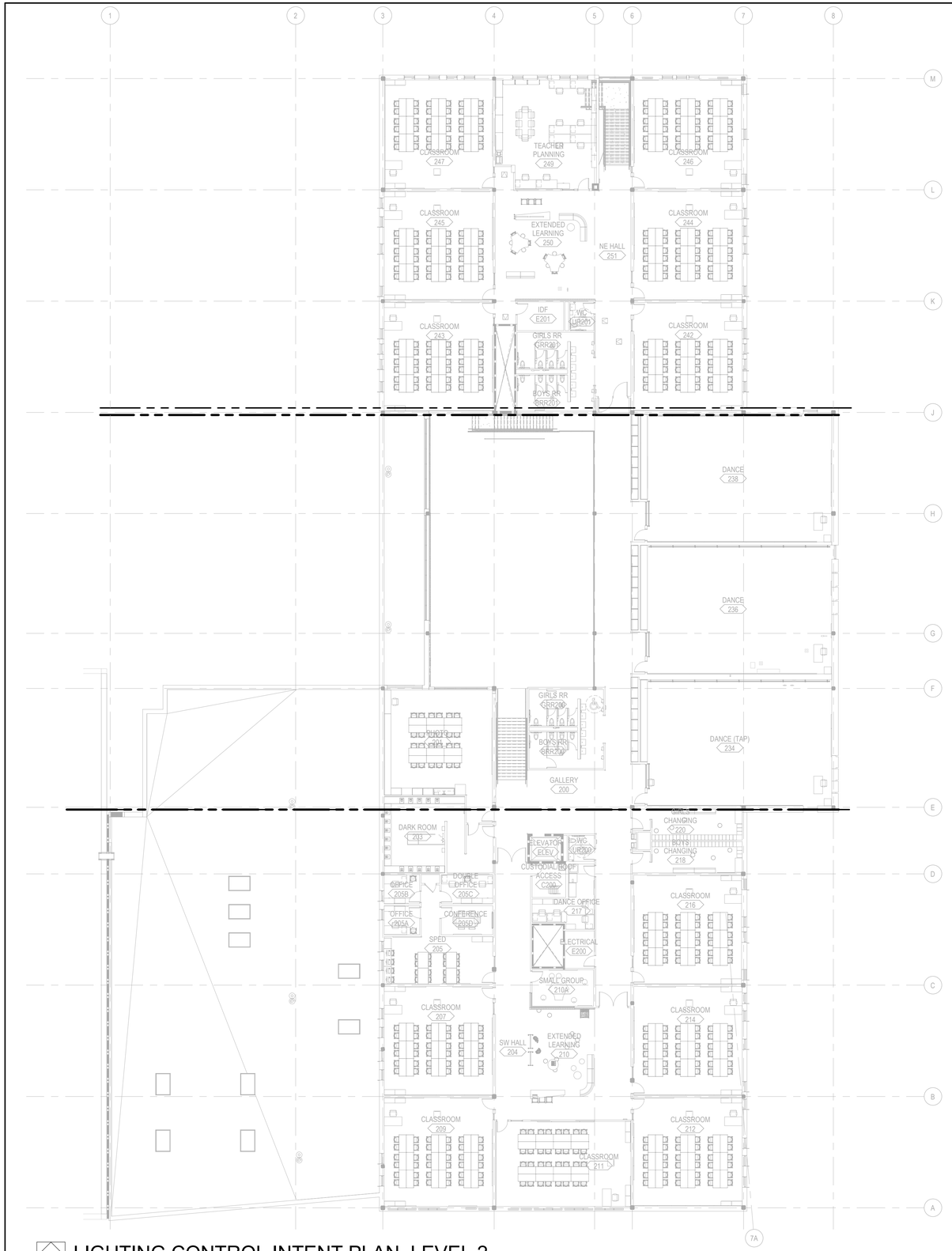

NORTH

LIGHTING CONTROL INTENT PLAN, LEVEL 2

SCALE: 1/16" = 1'-0"

General	Specfic Rm#	Turn-on	Operating hours	Turn-off
All Spaces		If a fire alarm or intrusion alarm occurs all lights come to normal function so on or on occ sensors.		
Entries	100, 130,140	Lights in the entry vestibules come on when the card is swiped and granted premission to enter. Once the building is disarmed all circulation spaces are turned on to 25%	Same as Corridors/ Circulation	Once the building is armed lights cycle off after 10mins
Corridors & Circulation Spaces		Once the building is disarmed lights operate on occupancy sensors.	Lighting is controlled by Occupancy Sensors. Lights are 25% when spaces are unoccupied, 100% when spaces are occupied. Also key switches in corridors can override the occupancy sensors.	Once the building is armed lights cycle off after 10mins
Classrooms	142-147, 136, 138, 113, 114,122, 126, 242-247, 249, 201,203-211 (odd), 212-216 (even), 234-238 (even)	Once the building is disarmed lights operate on occupancy sensors and photo cells and manual dimmers/switches.	Once occupancy is detected occupancy sensor in the room will turn on lights. Occupancy sensor can be programmed as vacancy sensor so lights are turned ON manually by teacher instead of occupancy sensor. There is rocker at the door and 4 button scene switch with rocker at the presentation location(teacher's desk) Rocker turns all light on/off and can dim all lights. At the presentation location scenes are 1. All on 2. All off 3. Presentation Mode; c1+c2 'OFF' others to 25% 4. Whiteboard; c1 + c2 'ON' 50% others 0% Rocker dims all lights	When the rooms is un-occupied for 10 mins lights cycle off When the building arms, classroom lights cycle off
Extended Learning	210, 250	Once the building is disarmed lights operate on occupancy sensors and photo cells and manual dimmers/switches.	Lights can be over riden by a dimming switch by the door. Occupancy sensor can be programmed as vacancy sensor so lights are turned ON manually by teacher instead of occupancy sensor.	When the rooms is un-occupied for 10 mins lights cycle off When the building arms, classroom lights cycle off
Offices	132B,132C,132D, 106-112 (even), 102,103,105,109, 114A, 114B, 115A, 123-129 (odd), 124,124A, 132, 149, 205A-205C, 217	Once the building is disarmed lights operate on occupancy sensors and photo cells and manual dimmers/switches.	Once occupancy is detected occupancy sensor in the room will turn on lights. However they can be over riden by the user. The user has the ability to turn lights on/off and dimm them up and down at button station near the door. Occupancy sensor can be programmed as vacancy sensor so lights are turned ON manually by teacher instead of occupancy sensor.	When the rooms is un-occupied for 30 mins lights cycle off When the building arms, lights cycle off
Conference Rooms	104,118, 205D, 210A	Once the building is disarmed lights operate on occupancy sensors and manual dimmers/switches.	Once occupancy is detected occupancy sensor in the room will turn on lights. However they can be over riden by the user. The user has the ability to turn lights on/off at button station near the door. Occupancy sensor can be programmed as vacancy sensor so lights are turned ON manually by teacher instead of occupancy sensor.	When the rooms is un-occupied for 10 mins lights cycle off When the building arms, lights cycle off
Kitchen	133	Once the building is disarmed lights operate on occupancy sensors.	There are two button stations ON/OFF in the kitchen if the lights need to be over riden	When the rooms is un-occupied for 10 mins lights cycle off When the building arms, lights cycle off
Commons	141	Once the building is disarmed lights operate on occupancy sensors and photo cells.	There are (2) 4 scene buttons, one outside storage 141A on main level and one at upper level dance balcony south end. Adjacent to each scene button is a rocker that can override to these scenes. 1. All on/off 2. Presentation, d off all others to 25% 3. All off, b 25% 4. Only a and c on 5. All dim	When the rooms is un-occupied for 10 mins lights cycle off When the building arms, lights cycle off

BID/PERMIT SET

CONDITIONAL USE NUMBER: CU2018-0016
DESIGN REVIEW NUMBER: DR2018-0114
SITE DEVELOPMENT PERMIT NUMBER: TBD
BUILDING PERMIT NUMBER: TBD

REGISTERED PROFESSIONAL ENGINEER
86828PE
OREGON
JULY 10, 2012
CANA STEPHENS
EXPIRES: 6/30/2020
03/13/19

LIGHTING CONTROL INTENT PLAN, LVL 2
ACMA
BEAVERTON SCHOOL DISTRICT

E0.3
74-18109-00
03/14/2019
REVISIONS

DLR Group
Architecture Engineering Planning Interiors

©2019, DLR Group Architecture & Engineering Inc., an Oregon corporation, ALL RIGHTS RESERVED

C:\Revit\74-18109-00_ACMA_MEP_2018_Central_p_raghu.rvt
3/13/2019 4:31:00 PM

LEGEND NOTES

LEGEND NOTES ARE COMMON TO ALL
SOME NOTES MAY NOT APPLY TO THIS SHEET

1. PROVIDE #10 COPPER WIRING FOR ALL LIFE SAFETY LIGHTING CIRCUITS FED FROM PANEL 4LS1 TO COMPENSATE FOR VOLTAGE DROP.

KEYED NOTES

1 TRACK AT NORTH RAMP WILL NOT SLOPE WITH RAMP. AT MUSIC CORRIDOR ENTRY, TRACK WILL BE 14'0" AFF. AT MAIN LEVEL, TRACK WILL BE AT 9'0" AFF.

2 TRACK AT SOUTH RAMP WILL NOT SLOPE WITH RAMP. AT LARGE ENSEMBLE ENTRY, TRACK WILL BE 14'0" AFF. AT MAIN ENTRY, TRACK WILL BE AT 9'0" AFF.

3 SURFACE MOUNT TRACK AT GALLERY ENTRY.

4 PROVIDE DEDICATED 20A, 120V CIRCUIT FOR ELEVATOR PIT LIGHTING. LOCATE LIGHT SWITCH FOR PIT LIGHTING SO THAT IT IS READILY ACCESSIBLE FROM THE PIT ACCESS DOOR.



LIGHTING PLAN, FIRST LEVEL - AREA A

NORTH

SCALE: 1/8" = 1'-0"

KEY PLAN

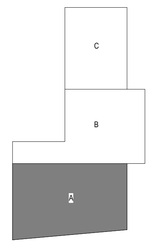

BID/PERMIT SET

CONDITIONAL USE NUMBER: CU2018-0016
DESIGN REVIEW NUMBER: DR2018-0114
SITE DEVELOPMENT PERMIT NUMBER: TBD
BUILDING PERMIT NUMBER: TBD

REGISTERED PROFESSIONAL ENGINEER
86828PE
OREGON
JULY 10, 2012
CHINA STEPHENS
EXPIRES: 6/30/2020
03/13/19

LIGHTING PLAN, FIRST LEVEL - AREA A
ACMA
BEAVERTON SCHOOL DISTRICT

E1.1A
74-18109-00
03/14/2019
REVISIONS

DLR Group
Architecture Engineering Planning Interiors

© 2019, DLR Group Architecture & Engineering Inc., an Oregon corporation, ALL RIGHTS RESERVED

C:\Revit\74-18109-00_ACMA_MEP_2018_Central_p_raghu.rvt
3/13/2019 4:31:02 PM

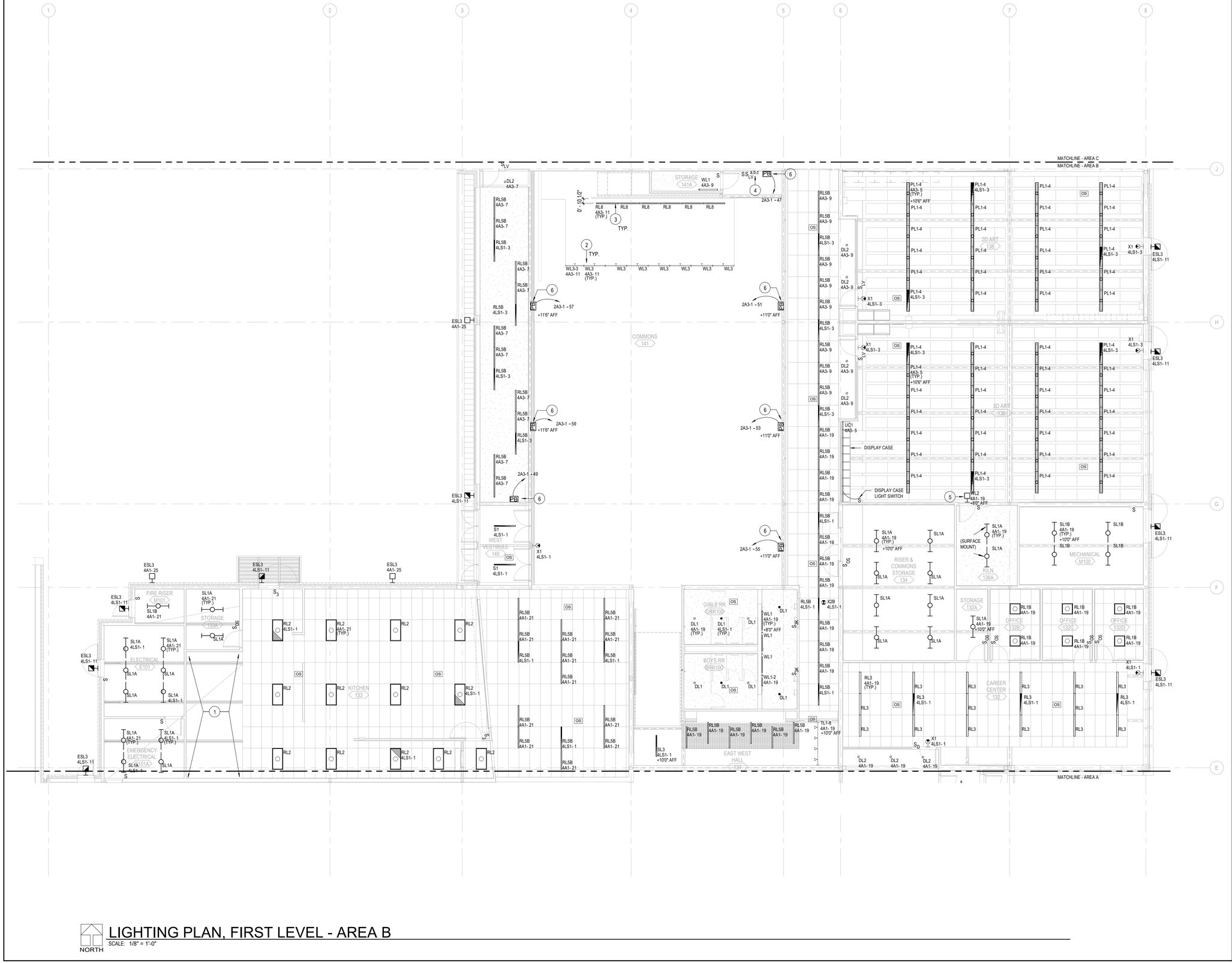

LIGHTING PLAN, FIRST LEVEL - AREA B

SCALE: 1/8" = 1'-0"

NORTH

LEGEND NOTES

LEGEND NOTES ARE COMMON TO ALL
SOME NOTES MAY NOT APPLY TO THIS SHEET

1. PROVIDE #10 COPPER WIRING FOR ALL LIFE SAFETY LIGHTING CIRCUITS FED FROM PANEL 4LS1 TO COMPENSATE FOR VOLTAGE DROP.

KEYED NOTES

1. SEE KITCHEN ENLARGED PLAN EQUIPMENT CONNECTION SCHEDULE AND FS SERIES DRAWINGS FOR LIGHTING DETAILS THIS SPACE.
2. PROVIDE CONTINUOUS LINEAR TAPE LIGHT WITHIN STAGE PLATFORM REVEAL. SEE 11/A8.8 AND 12/A8.8 FOR MOUNTING DETAILS.
3. PROVIDE CONTINUOUS RECESSED LINEAR GRAZER AIMED AT WOOD SLAT WALL. SEE 34/A8.8 FOR MOUNTING DIMENSIONS.
4. PROVIDE WATTSTOPPER SCENE SWITCH CONNECTED TO COMMONS FIXTURES SL4 AND SL5. SEE E1.2B FOR FIXTURE ZONING LOCATIONS.
5. TIE "IN-USE" FIXTURE WL2 ACTIVATION TO SWITCH IN KILN 136A.
6. PROVIDE WALL MOUNTED PLUG BOX WITH (2) 20A RECEPTACLES AND DMX OUTPUT. RECEPTACLES SHALL BE SWITCHED BY DMX RELAY PANEL.

KEY PLAN

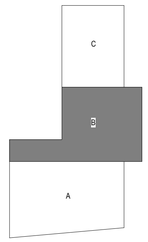

BID/PERMIT SET

CONDITIONAL USE NUMBER: CU2018-0016
DESIGN REVIEW NUMBER: DR2018-0114
SITE DEVELOPMENT PERMIT NUMBER: TBD
BUILDING PERMIT NUMBER: TBD

REGISTERED PROFESSIONAL ENGINEER
86828PE
OREGON
JULY 10, 2012
CHINA STEPHENS
EXPIRES: 6/30/2020
03/13/19

LIGHTING PLAN, FIRST LEVEL - AREA B
ACMA
BEAVERTON SCHOOL DISTRICT

E1.1B
74-18109-00
03/14/2019
REVISIONS

DLR Group
Architecture Engineering Planning Interiors

©2019, DLR Group Architecture & Engineering Inc., an Oregon corporation, ALL RIGHTS RESERVED

C:\Revit\74-18109-00_ACMA_MEP_2018_Central_p_raghu.rvt
3/13/2019 4:31:17 PM

LEGEND NOTES

LEGEND NOTES ARE COMMON TO ALL
SOME NOTES MAY NOT APPLY TO THIS SHEET

1. PROVIDE #10 COPPER WIRING FOR ALL LIFE SAFETY LIGHTING CIRCUITS FED FROM PANEL 4LS1 TO COMPENSATE FOR VOLTAGE DROP.

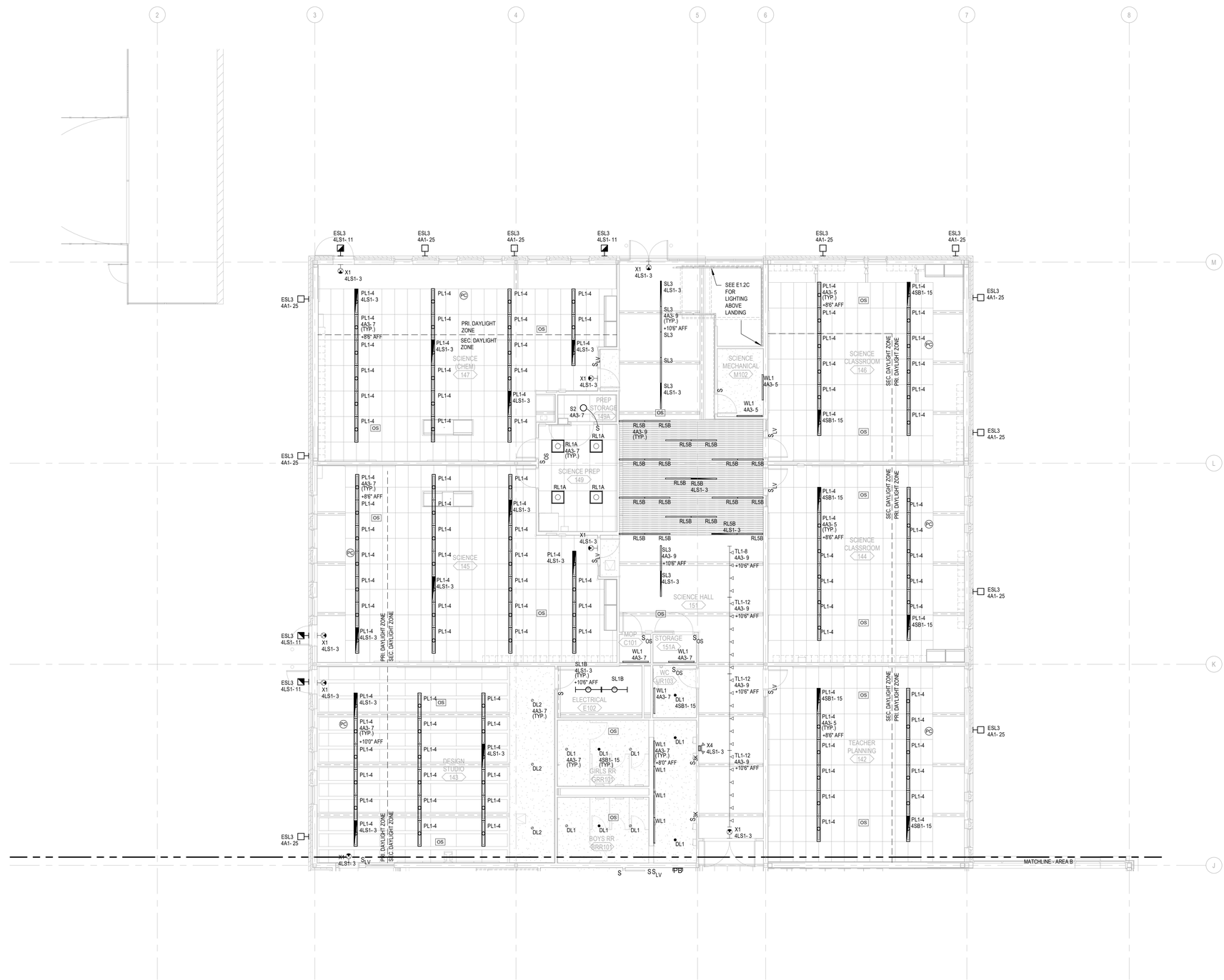

LIGHTING PLAN, FIRST LEVEL - AREA C

SCALE: 1/8" = 1'-0"

NORTH

C:\Revit\74-18109-00_ACMA_MEP_2018_Central_p_raghu.rvt
3/13/2019 4:31:28 PM

BID/PERMIT SET

CONDITIONAL USE NUMBER: CU2018-0016
DESIGN REVIEW NUMBER: DR2018-0114
SITE DEVELOPMENT PERMIT NUMBER: TBD
BUILDING PERMIT NUMBER: TBD

REGISTERED PROFESSIONAL ENGINEER
86828PE
OREGON
JULY 10, 2012
DANA STEPHENS
EXPIRES: 6/30/2020
03/13/19

LIGHTING PLAN, FIRST LEVEL - AREA C
ACMA
BEAVERTON SCHOOL DISTRICT

E1.1C
74-18109-00
03/14/2019
REVISIONS

KEY PLAN

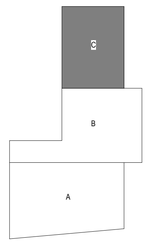

DLR Group
Architecture Engineering Planning Interiors

©2019, DLR Group Architecture & Engineering Inc., an Oregon corporation, ALL RIGHTS RESERVED

LEGEND NOTES

LEGEND NOTES ARE COMMON TO ALL
SOME NOTES MAY NOT APPLY TO THIS SHEET

1. PROVIDE #10 COPPER WIRING FOR ALL LIFE SAFETY LIGHTING CIRCUITS FED FROM PANEL 4LS1 TO COMPENSATE FOR VOLTAGE DROP.

KEYED NOTES

1 ENTIRE ROOM DAYLIGHT DIMMED AS SINGLE ZONE BY PHOTOCELL.

2 SEE 11/A11.12 FOR WALL ELEVATION OF RL5B FIXTURES IN WOOD SLAT WALL.

3 LABEL LIGHT SWITCHES IN ROOM ACCORDINGLY - 'a' AS "GENERAL LIGHTING" AND 'b' AS "RED LIGHT" FOR PHOTO PROCESSING.

BID/PERMIT SET

CONDITIONAL USE NUMBER: CU2018-0016
DESIGN REVIEW NUMBER: DR2018-0114
SITE DEVELOPMENT PERMIT NUMBER: TBD
BUILDING PERMIT NUMBER: TBD

REGISTERED PROFESSIONAL ENGINEER
86828PE
OREGON
JULY 10, 2012
CHINA STEPHENS
EXPIRES: 6/30/2020
3/13/19

LIGHTING PLAN,SECOND LEVEL - AREA A
ACMA
BEAVERTON SCHOOL DISTRICT

E1.2A
74-18109-00
03/14/2019
REVISIONS

KEY PLAN

NORTH

LIGHTING PLAN, SECOND LEVEL - AREA A
SCALE: 1/8" = 1'-0"

© 2019, DLR Group Architecture & Engineering Inc., an Oregon corporation, ALL RIGHTS RESERVED

DLR Group
Architecture Engineering Planning Interiors

C:\Revit\74-18109-00_ACMA_MEP_2018_Central_p_raghu.rvt
3/13/2019 4:31:40 PM

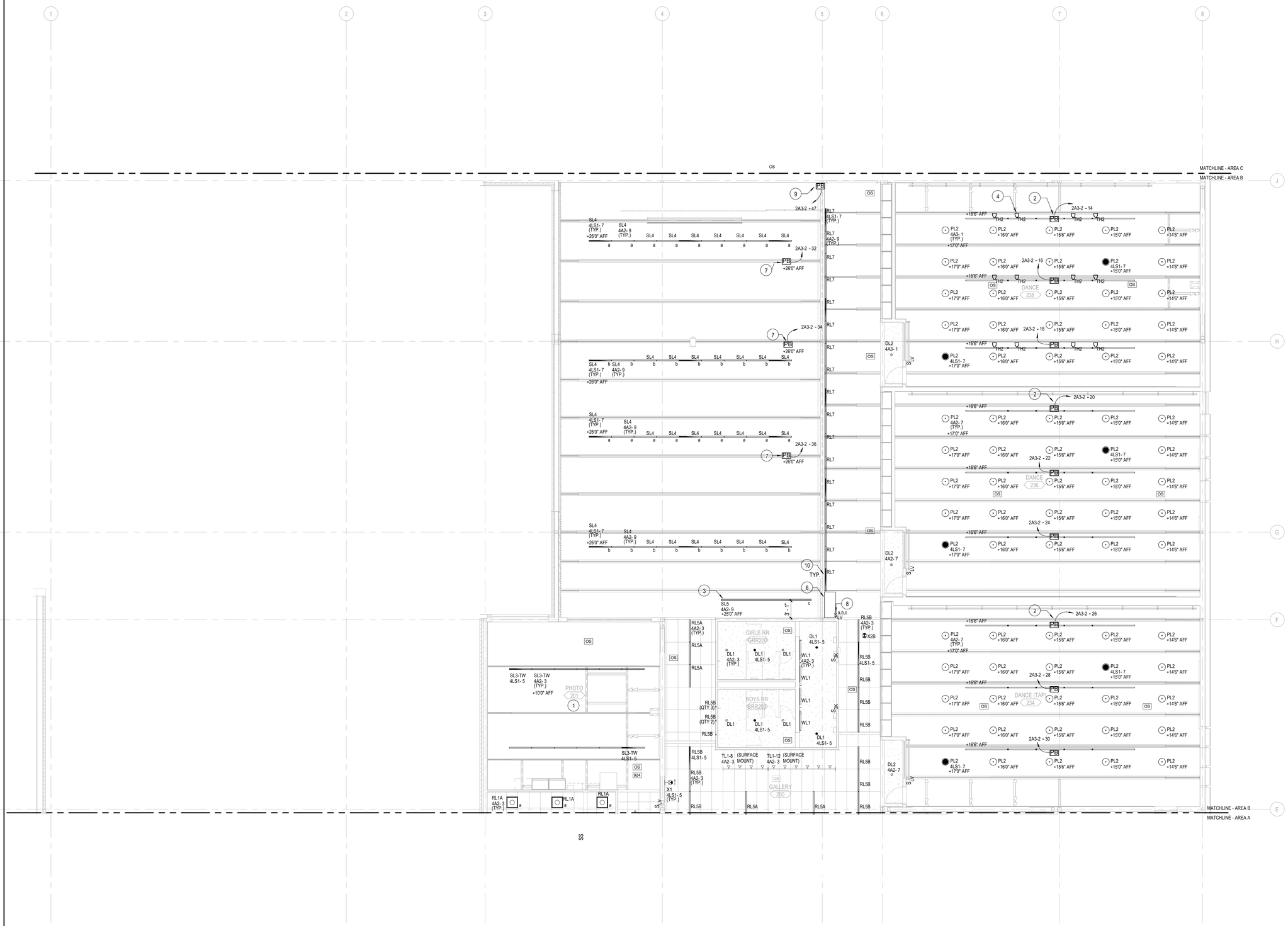

LIGHTING PLAN, SECOND LEVEL - AREA B

SCALE: 1/8" = 1'-0"

NORTH

LEGEND NOTES

LEGEND NOTES ARE COMMON TO ALL
SOME NOTES MAY NOT APPLY TO THIS SHEET

1. PROVIDE #10 COPPER WIRING FOR ALL LIFE SAFETY LIGHTING CIRCUITS FED FROM PANEL 4LS1 TO COMPENSATE FOR VOLTAGE DROP.

KEYED NOTES

1 PROVIDE STANDALONE TUNABLE WHITE DIMMING CONTROLS FOR FIXTURES IN THIS SPACE. FINELITE FINETUNE DMX AS BASIS OF DESIGN.

2 PROVIDE PIPE MOUNTED PLUG BOX WITH (2) 20A RECEPTACLES AND DMX OUTPUT. RECEPTACLES SHALL BE SWITCHED BY DMX RELAY PANEL.

3 LINEAR WALL WASH PENDANT FIXTURE. PROPERLY ORIENT FIXTURE IN-FIELD TO ILLUMINATE WALL.

4 TL2 FIXTURES SHOWN IN DANCE 238 TO BE SHARED AMONG ALL 3 DANCE ROOMS. SHOWN IN JUST ONE ROOM FOR REFERENCE.

6 SPACE RESERVED FOR STAGE AV AND LIGHTING EQUIPMENT.

7 PROVIDE STRUCTURAL BEAM MOUNTED PLUG BOX WITH (2) 20A RECEPTACLES AND DMX OUTPUT. RECEPTACLES SHALL BE SWITCHED BY DMX RELAY PANEL.

8 PROVIDE ADDITIONAL WATTSTOPPER SCENE SWITCH CONNECTED TO COMMONS LIGHTING CONTROL TO ALLOW CONTROL OF "HOUSE" LIGHTS.

9 PROVIDE WALL MOUNTED PLUG BOX WITH (2) 20A RECEPTACLES AND DMX OUTPUT. RECEPTACLES SHALL BE SWITCHED BY DMX RELAY PANEL.

10 SURFACE MOUNT RL7 FIXTURE TO BOTTOM OF STRUCTURAL BEAM IN CONTINUOUS RUN.

KEY PLAN

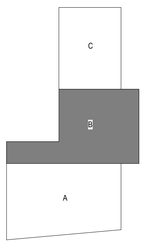

NORTH

BID/PERMIT SET

CONDITIONAL USE NUMBER: CU2018-0016
DESIGN REVIEW NUMBER: DR2018-0114
SITE DEVELOPMENT PERMIT NUMBER: TBD
BUILDING PERMIT NUMBER: TBD

REGISTERED PROFESSIONAL ENGINEER
86828PE
OREGON
JULY 10, 2012
OANA STEPHENS
03/13/19
EXPIRES: 6/30/2020

LIGHTING PLAN, SECOND LEVEL - AREA B
ACMA
BEAVERTON SCHOOL DISTRICT

E1.2B
74-18109-00
03/14/2019
REVISIONS

DLR Group
Architecture Engineering Planning Interiors

© 2019, DLR Group Architecture & Engineering Inc., an Oregon corporation, ALL RIGHTS RESERVED

C:\Revit\74-18109-00_ACMA_MEP_2018_Central_p_raghu.rvt
3/13/2019 4:31:52 PM

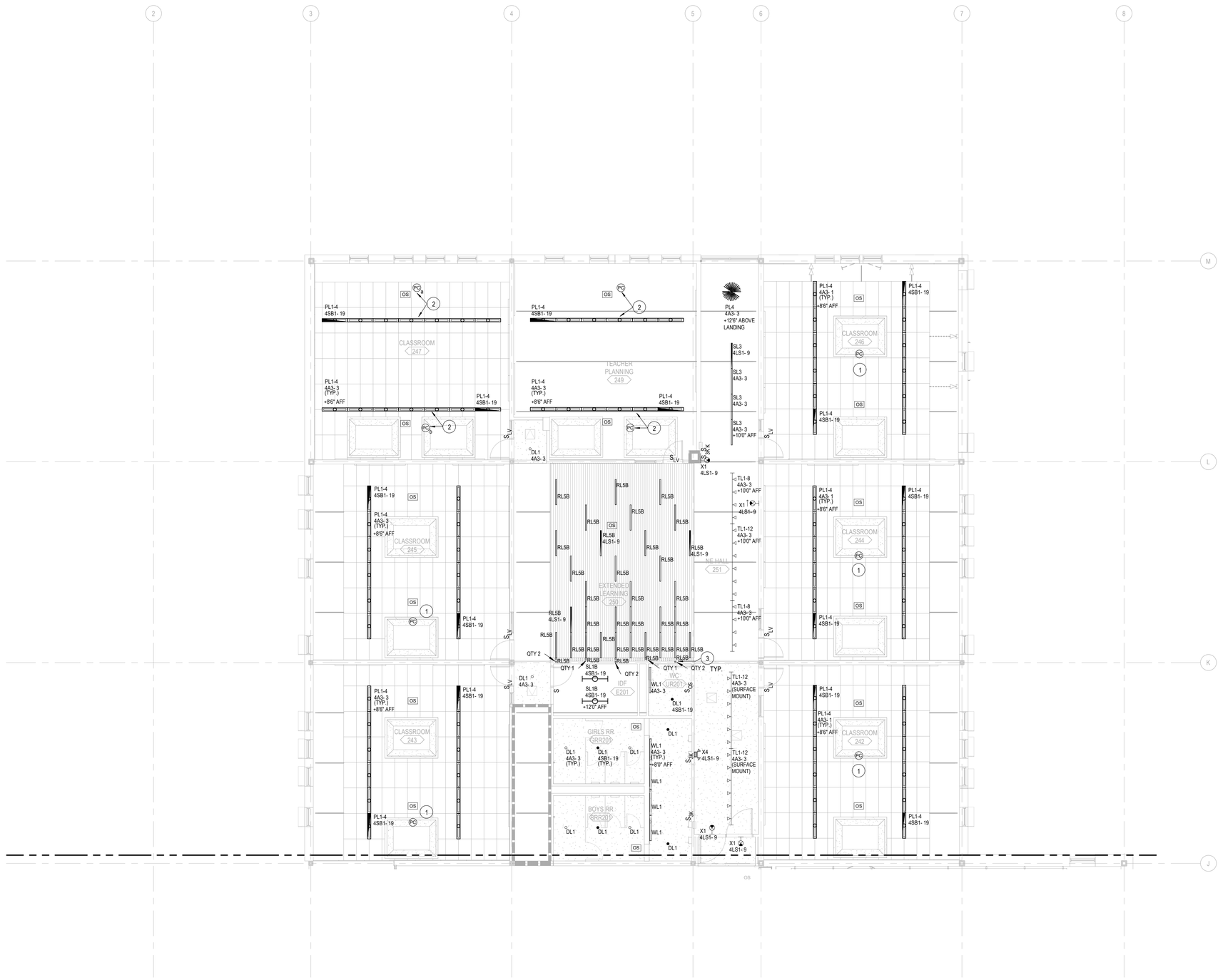

LIGHTING PLAN, SECOND LEVEL - AREA C

NORTH SCALE: 1/8" = 1'-0"

LEGEND NOTES

LEGEND NOTES ARE COMMON TO ALL
SOME NOTES MAY NOT APPLY TO THIS SHEET

1. PROVIDE #10 COPPER WIRING FOR ALL LIFE SAFETY LIGHTING CIRCUITS FED FROM PANEL 4LS1 TO COMPENSATE FOR VOLTAGE DROP.

KEYED NOTES

1 ENTIRE ROOM DAYLIGHT DIMMED AS SINGLE ZONE BY PHOTOCELL.
2 PHOTOCELL CONTROLS DAYLIGHT DIMMING OF ADJACENT ROW OF LIGHT FIXTURES.
3 SEE 41/A11.12 FOR WALL ELEVATION OF RL5B FIXTURES IN WOOD SLAT WALL.

BID/PERMIT SET

CONDITIONAL USE NUMBER: CU2018-0016
DESIGN REVIEW NUMBER: DR2018-0114
SITE DEVELOPMENT PERMIT NUMBER: TBD
BUILDING PERMIT NUMBER: TBD

REGISTERED PROFESSIONAL ENGINEER
86828PE
OREGON
JULY 10, 2012
OANA STEPHENS
03/13/19
EXPIRES: 6/30/2020

LIGHTING PLAN, SECOND LEVEL - AREA C
ACMA
BEAVERTON SCHOOL DISTRICT

E1.2C
74-18109-00
03/14/2019
REVISIONS

KEY PLAN

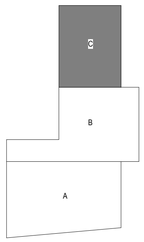

DLR Group
Architecture Engineering Planning Interiors

©2019, DLR Group Architecture & Engineering Inc., an Oregon corporation, ALL RIGHTS RESERVED

C:\Revit\74-18109-00_ACMA_MEP_2018_Central_p_raghu.rvt
3/13/2019 4:32:01 PM

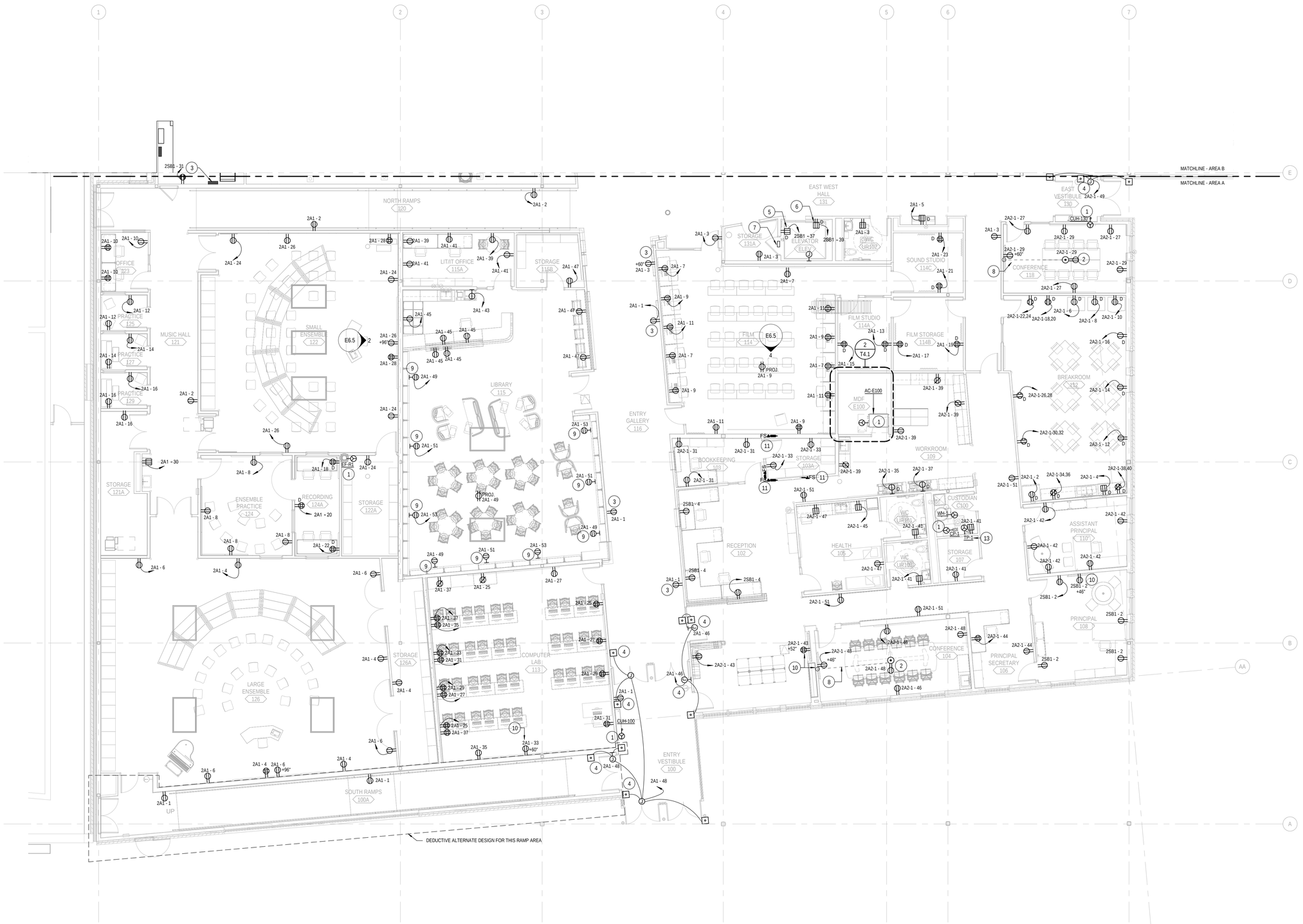

POWER PLAN, FIRST LEVEL - AREA A

SCALE: 1/8" = 1'-0"

NORTH

LEGEND NOTES

LEGEND NOTES ARE COMMON TO ALL
SOME NOTES MAY NOT APPLY TO THIS SHEET

KEYED NOTES

1. PROVIDE ELECTRICAL CONNECTION TO MECHANICAL EQUIPMENT. SEE MECHANICAL AND PLUMBING EQUIPMENT CONNECTION SCHEDULES ON E7.2 FOR DETAILS.
2. PROVIDE 4-GANG HUBBELL SYSTEM ONE RECESSED CONCRETE FLOOR BOX, MODEL CFB2G30CR WITH 24GTCVRALU COVER, (1) 20A GRAY DUPLEX POWER RECEPTACLE, (1) DATA RECEPTACLE WITH 2 DATA PORTS AND (1) HDMI.
3. PROVIDE WHITE COVER PLATE USING ONE PIECE #14 COLD ROLLED ZINC PLATED STEEL WITH FIVE STAGE BAKED WHITE POLYESTER POWDER ENAMEL FINISH.
4. PROVIDE 120V CONNECTION TO ADA PUSH BUTTON AND PROVIDE ANY LINE AND LOW VOLTAGE WIRING REQUIRED BETWEEN DOOR AND PUSH BUTTON. EXACT REQUIREMENTS TO BE COORDINATED WITH DOOR INSTALLER/SUPPLIER.
5. PROVIDE DEDICATED 20A, 120V CIRCUIT FOR ELEVATOR GFCI RECEPTACLE.
6. PROVIDE 20A, 120V CIRCUIT FOR ELEVATOR PIT SUMP PUMP. PROVIDE ADDITIONAL GFCI 20A, 120V RECEPTACLE FOR SUMP PUMP ALARM PANEL. CONFIRM PANEL LOCATION WITH OWNER AND ARCHITECT.
7. PROVIDE DEDICATED 15A, 120V CIRCUIT FOR ELEVATOR CAB LIGHTS. PROVIDE LOCKABLE 15A, 1P ENCLOSED CIRCUIT BREAKER. PROVIDE ENGRAVED LABEL.
8. PROVIDE (1) 1" CONDUIT IN TRENCH FROM WALL TO FLOORBOX FOR POWER CONNECTION.
9. HORIZONTALLY MOUNT DUPLEX RECEPTACLE AT +6" AFF WITHIN BASE OF LIBRARY SHELVING UNIT. SEE 23/A11.16.
10. PROVIDE RECEPTACLE LOCATED WITHIN WALLBOX TV MOUNT. REFER TO DETAILS FOR ADDITIONAL INFORMATION.
11. PROVIDE 120V AND FIRE ALARM CONNECTION TO FIRE/SMOKE DAMPER. SEE 6/E6.1 FOR DETAILS. CONNECT NO MORE THAN 10 DAMPERS PER 120V CIRCUIT. SEE PANEL SCHEDULES FOR DESIGNATED CIRCUITS.
13. PROVIDE 120V CONNECTION AND ANY ASSOCIATED LOW VOLTAGE WIRING REQUIRED FOR TRAP PRIMER FROM NEAREST 120V CIRCUIT. COORDINATE EXACT REQUIREMENTS WITH DIVISION 22.

KEY PLAN

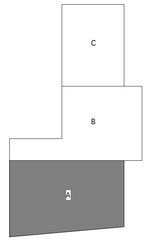

NORTH

BID/PERMIT SET

CONDITIONAL USE NUMBER: CU2018-0016
DESIGN REVIEW NUMBER: DR2018-0114
SITE DEVELOPMENT PERMIT NUMBER: TBD
BUILDING PERMIT NUMBER: TBD

REGISTERED PROFESSIONAL ENGINEER
86828PE
OREGON
JULY 10, 2012
OANA STEPHENS
03/13/19
EXPIRES: 6/30/2020

POWER PLAN, FIRST LEVEL - AREA A
ACMA
BEAVERTON SCHOOL DISTRICT

E2.1A
74-18109-00
03/14/2019
REVISIONS

DLR Group
Architecture Engineering Planning Interiors

© 2019, DLR Group Architecture & Engineering Inc., an Oregon corporation, ALL RIGHTS RESERVED

C:\Revit\74-18109-00_ACMA_MEP_2018_Central_ostephens.rvt
3/13/2019 11:21:08 PM

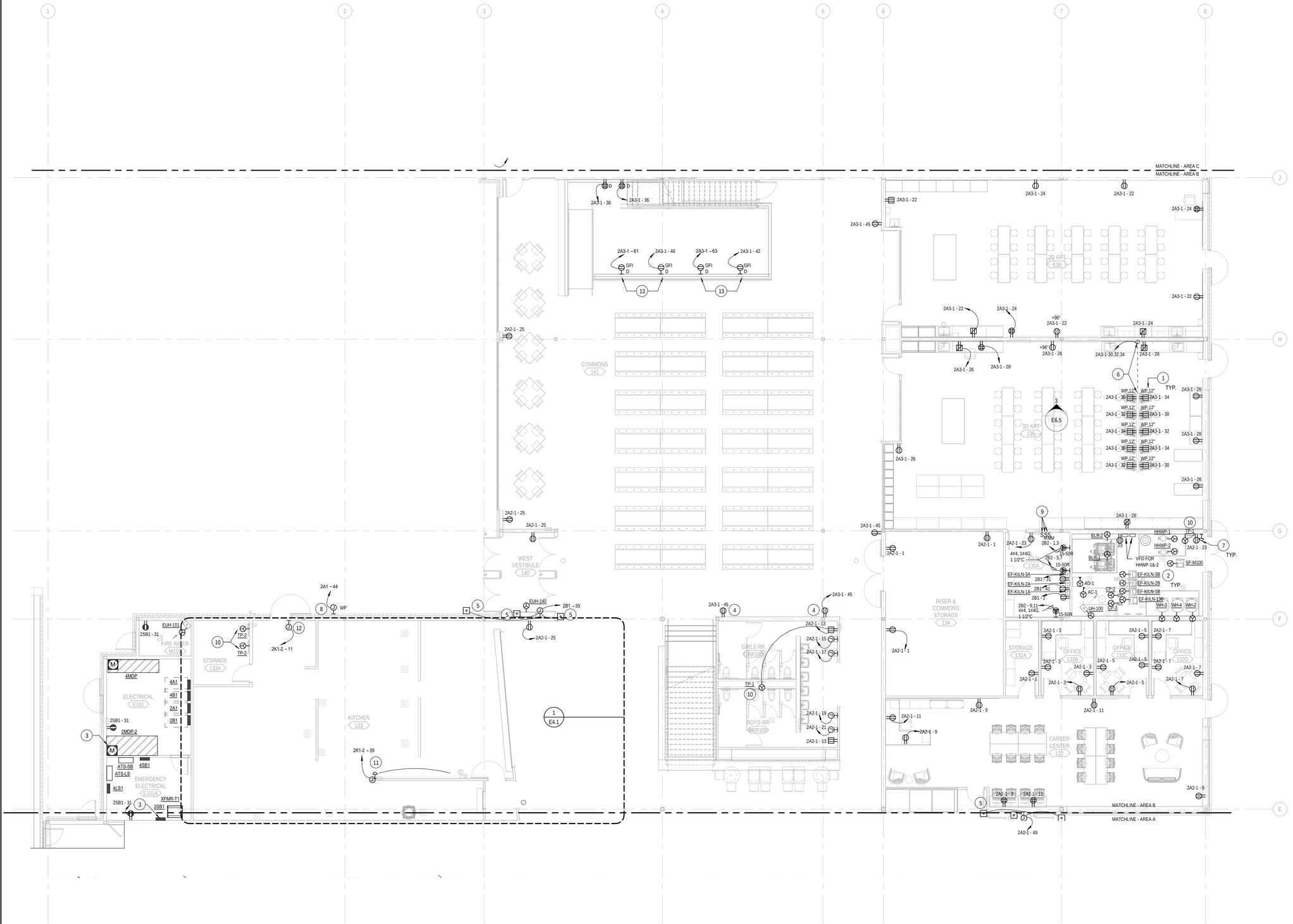

POWER PLAN, FIRST LEVEL - AREA B

NORTH

SCALE: 1/8" = 1'-0"

LEGEND NOTES

KEYED NOTES

1. PROVIDE WEATHERPROOF COVERS FOR POWER GFI RECEPTACLES FOR POTTERY WHEELS.
2. PROVIDE ELECTRICAL CONNECTION TO MECHANICAL EQUIPMENT. SEE MECHANICAL AND PLUMBING EQUIPMENT CONNECTION SCHEDULES ON E7.2 FOR DETAILS.
3. SEE SITE PLAN E0.1 FOR UNDERGROUND CONDUITS BETWEEN EXISTING PAC ELECTRICAL ROOM AND NEW ELECTRICAL ROOM.
4. PROVIDE WHITE COVER PLATE USING ONE PIECE #14 COLD ROLLED ZINC PLATED STEEL WITH FIVE STAGE BAKED WHITE POLYESTER POWDER ENAMEL FINISH.
5. PROVIDE 120V CONNECTION TO ADA PUSH BUTTON AND PROVIDE ANY LINE AND LOW VOLTAGE WIRING REQUIRED BETWEEN DOOR AND PUSH BUTTON. EXACT REQUIREMENTS TO BE COORDINATED WITH DOOR INSTALLER/SUPPLIER.
6. PROVIDE (1) 1" CONDUIT IN TRENCH FROM WALL, STUBBED UP TO PARTIAL HEIGHT WALL.
7. PROVIDE EMERGENCY POWER OFF (EPO) SWITCH FOR BOILERS IN ROOM. SEE 5/E6.1 FOR DETAILS.
8. PROVIDE 120V CONNECTION TO IRRIGATION CONTROLLER.
9. PROVIDE BANK OF 3 TOGGLE SWITCHES FOR KILN EXHAUST FANS. COORDINATE EXACT REQUIREMENTS WITH DIVISION 23.
10. PROVIDE 120V CONNECTION AND ANY ASSOCIATED LOW VOLTAGE WIRING REQUIRED FOR TRAP PRIMER FROM NEAREST 120V CIRCUIT. COORDINATE EXACT REQUIREMENTS WITH DIVISION 22.
11. PROVIDE 120V POWER CONNECTION TO SOLENOID VALVE. SEE 22/M5.1 FOR DETAILS.
12. PROVIDE 120V CONNECTION TO HEAT TRACING FOR CAN WASH.
13. PROVIDE DEDICATED 120V GFCI RECEPTACLE. SEE DETAIL 13/A8.8 FOR MOUNTING DETAILS.

KEY PLAN

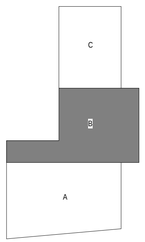

BID/PERMIT SET

CONDITIONAL USE NUMBER: CU2018-0016
DESIGN REVIEW NUMBER: DR2018-0314
SITE DEVELOPMENT PERMIT NUMBER: TBD
BUILDING PERMIT NUMBER: TBD

REGISTERED PROFESSIONAL ENGINEER
86828PE
OREGON
JULY 10, 2012
CHANA STEPHENS
03/13/19
EXPIRES: 6/30/2020

POWER PLAN, FIRST LEVEL - AREA B
ACMA
BEAVERTON SCHOOL DISTRICT

E2.1B
74-18109-00
03/14/2019
REVISIONS

DLR Group
Architecture Engineering Planning Interiors

©2019, DLR Group Architecture & Engineering Inc., an Oregon corporation, ALL RIGHTS RESERVED

C:\Revit\74-18109-00_ACMA_MEP_2018_Central_cstephens.rvt
3/13/2019 11:21:34 PM

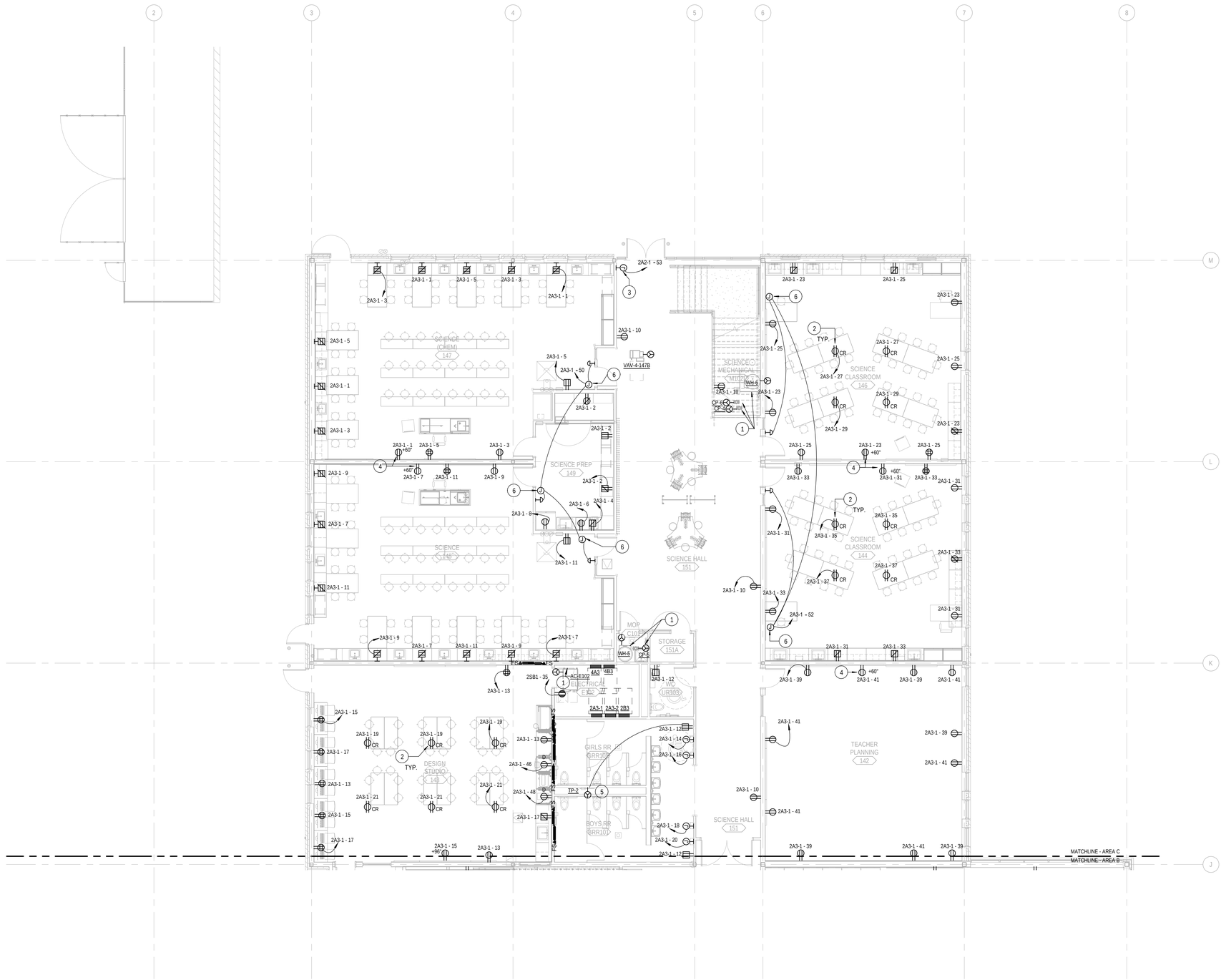

POWER PLAN, FIRST LEVEL - AREA C

SCALE: 1/8" = 1'-0"

NORTH

LEGEND NOTES

LEGEND NOTES ARE COMMON TO ALL
SOME NOTES MAY NOT APPLY TO THIS SHEET

KEYED NOTES

1. PROVIDE ELECTRICAL CONNECTION TO MECHANICAL EQUIPMENT. SEE MECHANICAL AND PLUMBING EQUIPMENT CONNECTION SCHEDULES ON E7.2 FOR DETAILS.
2. PROVIDE CORD REEL WITH (2) DUPLEX RECEPTACLES EQUAL TO HUBBELL HBL45123R220WM1. SEE 4/E6.1 FOR CORD REEL MOUNTING DETAIL.
3. PROVIDE 120V CONNECTION TO DOOR POWER SUPPLY.
4. PROVIDE RECEPTACLE LOCATED WITHIN WALLBOX TV MOUNT. REFER TO DETAILS FOR ADDITIONAL INFORMATION.
5. PROVIDE 120V CONNECTION AND ANY ASSOCIATED LOW VOLTAGE WIRING REQUIRED FOR TRAP PRIMER FROM NEAREST 120V CIRCUIT. COORDINATE EXACT REQUIREMENTS WITH DIVISION 22.
6. PROVIDE 120V CONNECTION TO SOLENOID VALVE. SEE 23/M5.1 FOR DETAILS.

KEY PLAN

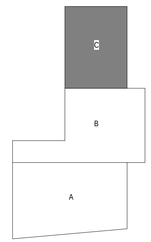

NORTH

BID/PERMIT SET

CONDITIONAL USE NUMBER: CU2018-0016
DESIGN REVIEW NUMBER: DR2018-0314
SITE DEVELOPMENT PERMIT NUMBER: TBD
BUILDING PERMIT NUMBER: TBD

REGISTERED PROFESSIONAL ENGINEER
86828PE
OREGON
JULY 10, 2012
CHANA STEPHENS
03/13/19
EXPIRES: 6/30/20

POWER PLAN, FIRST LEVEL - AREA C
ACMA
BEAVERTON SCHOOL DISTRICT

E2.1C
74-18109-00
03/14/2019
REVISIONS

DLR Group
Architecture Engineering Planning Interiors

©2019, DLR Group Architecture & Engineering Inc., an Oregon corporation, ALL RIGHTS RESERVED

C:\Revit\74-18109-00_ACMA_MEP_2018_Central_cstephens.rvt
3/13/2019 11:21:53 PM

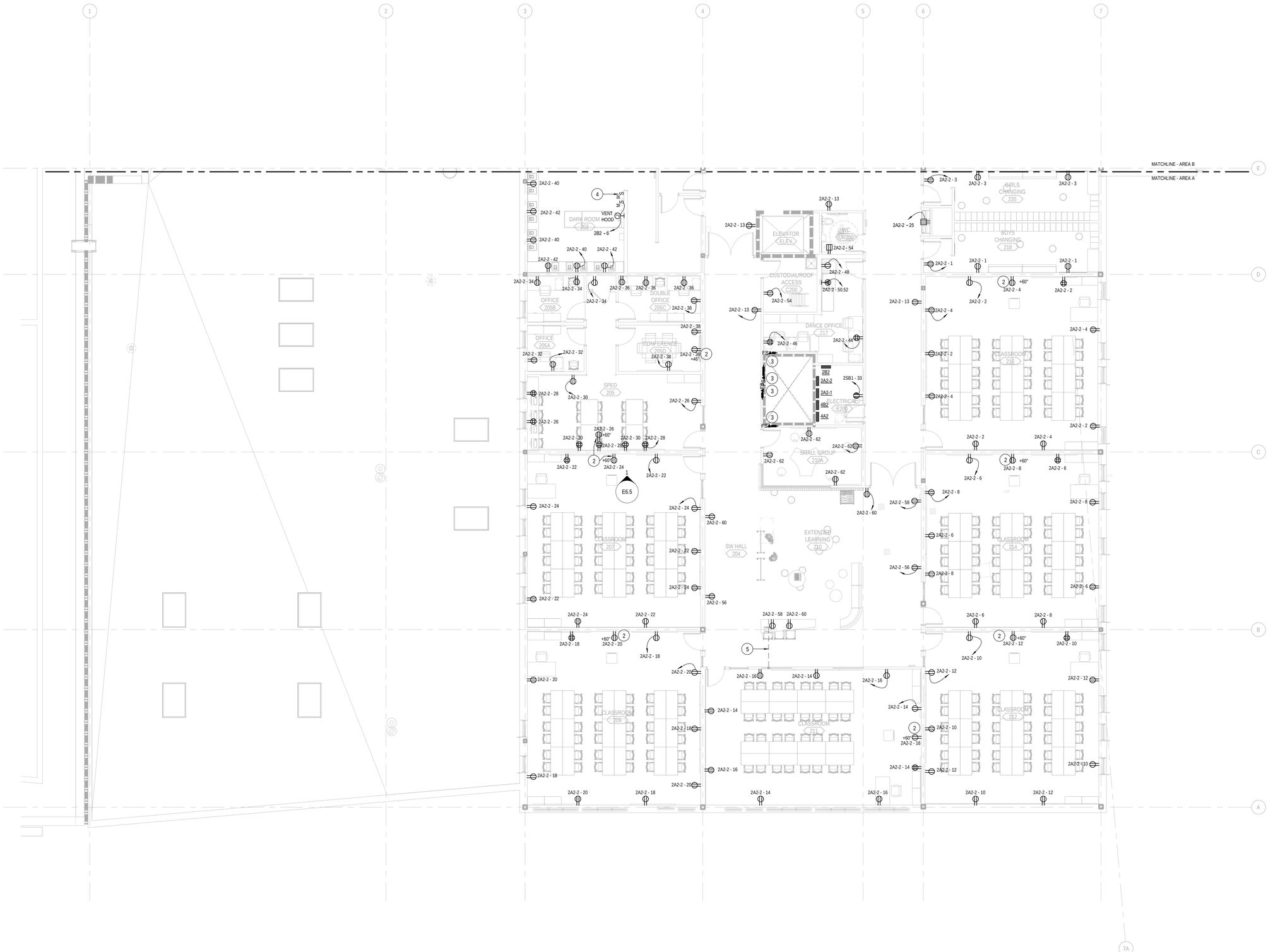

POWER PLAN, SECOND LEVEL - AREA A

SCALE: 1/8" = 1'-0"

NORTH

LEGEND NOTES

LEGEND NOTES ARE COMMON TO ALL
SOME NOTES MAY NOT APPLY TO THIS SHEET

KEYED NOTES

2 PROVIDE RECEPTACLE LOCATED WITHIN WALLBOX TV MOUNT. REFER TO DETAILS FOR ADDITIONAL INFORMATION.

3 PROVIDE 120V AND FIRE ALARM CONNECTION TO FIRE/SMOKE DAMPER. SEE 6/E6.1 FOR DETAILS. CONNECT NO MORE THAN 10 DAMPERS PER 120V CIRCUIT. SEE PANEL SCHEDULES FOR DESIGNATED CIRCUITS.

4 PROVIDE LOCAL ON/OFF SWITCH TO CONTROL EXHAUST FAN EF-203.

5 PROVIDE (1) 1" CONDUIT IN TRENCH FROM WALL TO DESK FOR POWER CONNECTIONS.

KEY PLAN

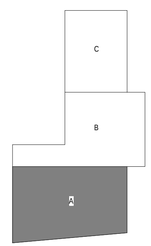

BID/PERMIT SET

CONDITIONAL USE NUMBER: CU2018-0016
DESIGN REVIEW NUMBER: DR2018-0114
SITE DEVELOPMENT PERMIT NUMBER: TBD
BUILDING PERMIT NUMBER: TBD

REGISTERED PROFESSIONAL ENGINEER
86828PE
OREGON
JULY 10, 2012
CHINA STEPHENS
EXPIRES: 6/30/20

03/13/19

POWER PLAN, SECOND LEVEL - AREA A
ACMA
BEAVERTON SCHOOL DISTRICT

E2.2A
74-18109-00
03/14/2019
REVISIONS

DLR Group
Architecture Engineering Planning Interiors

© 2019, DLR Group Architecture & Engineering Inc., an Oregon corporation, ALL RIGHTS RESERVED

C:\Revit\74-18109-00_ACMA_MEP_2018_Central_cstephens.rvt
3/13/2019 11:30:40 PM

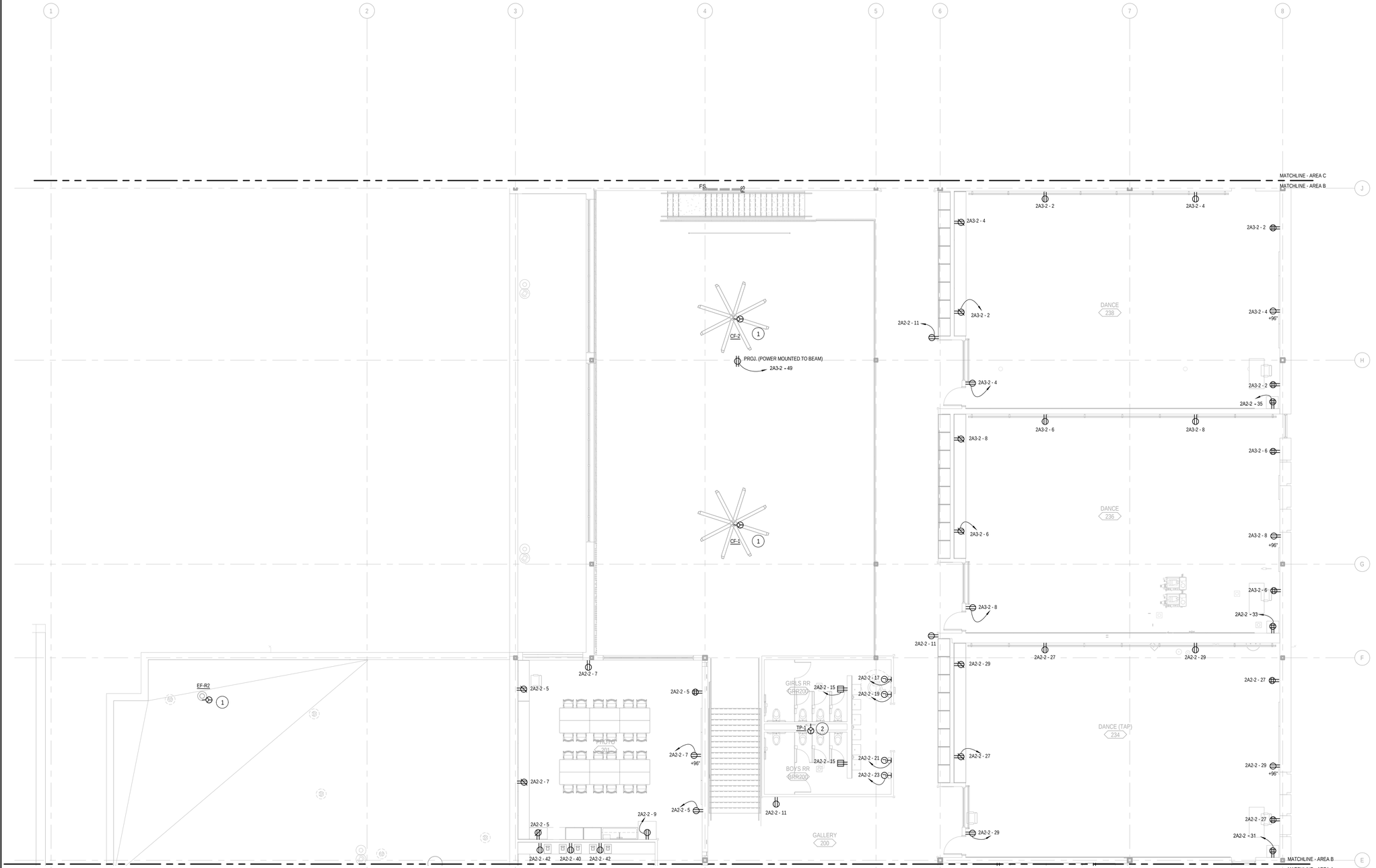

POWER PLAN, SECOND LEVEL - AREA B

NORTH

SCALE: 1/8" = 1'-0"

LEGEND NOTES

LEGEND NOTES ARE COMMON TO ALL
SOME NOTES MAY NOT APPLY TO THIS SHEET

KEYED NOTES

1 PROVIDE ELECTRICAL CONNECTION TO MECHANICAL EQUIPMENT. SEE MECHANICAL AND PLUMBING EQUIPMENT CONNECTION SCHEDULES ON E7.2 FOR DETAILS.

2 PROVIDE 120V CONNECTION AND ANY ASSOCIATED LOW VOLTAGE WIRING REQUIRED FOR TRAP PRIMER FROM NEAREST 120V CIRCUIT. COORDINATE EXACT REQUIREMENTS WITH DIVISION 22.

KEY PLAN

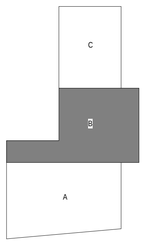

BID/PERMIT SET

CONDITIONAL USE NUMBER: CU2018-0016
DESIGN REVIEW NUMBER: DR2018-0314
SITE DEVELOPMENT PERMIT NUMBER: TBD
BUILDING PERMIT NUMBER: TBD

REGISTERED PROFESSIONAL ENGINEER
86828PE
OREGON
JULY 10, 2012
CHANA STEPHENS
EXPIRES: 6/30/2020
03/13/19

POWER PLAN, SECOND LEVEL - AREA B
ACMA
BEAVERTON SCHOOL DISTRICT

E2.2B
74-18109-00
03/14/2019
REVISIONS

DLR Group
Architecture Engineering Planning Interiors

©2019, DLR Group Architecture & Engineering Inc., an Oregon corporation, ALL RIGHTS RESERVED

C:\Revit\74-18109-00_ACMA_MEP_2018_Central_ostephens.rvt
3/13/2019 11:30:55 PM

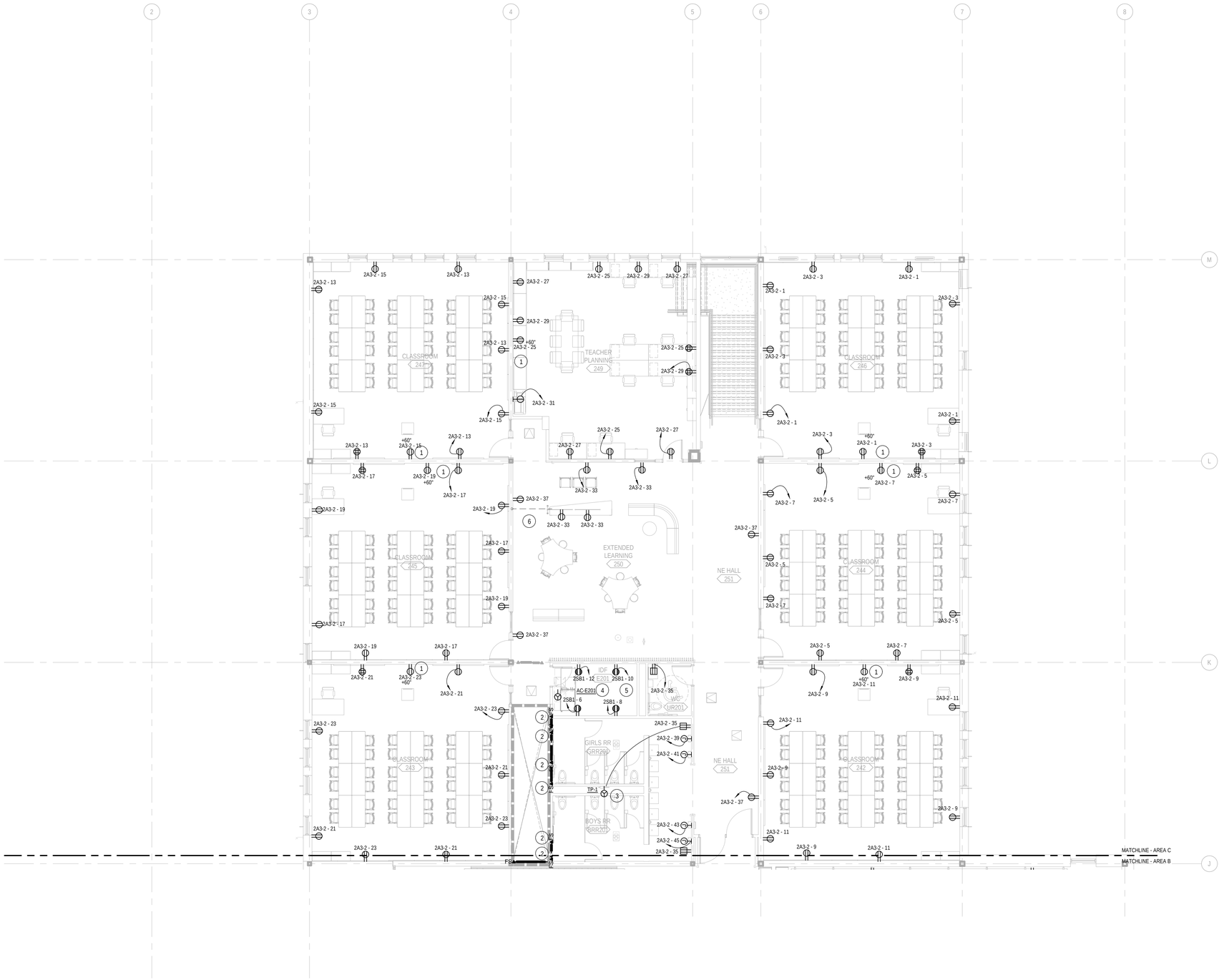

POWER PLAN, SECOND LEVEL - AREA C

SCALE: 1/8" = 1'-0"

NORTH

LEGEND NOTES

LEGEND NOTES ARE COMMON TO ALL
SOME NOTES MAY NOT APPLY TO THIS SHEET

KEYED NOTES

1. PROVIDE RECEPTACLE LOCATED WITHIN WALLBOX TV MOUNT. REFER TO DETAILS FOR ADDITIONAL INFORMATION.
2. PROVIDE 120V AND FIRE ALARM CONNECTION TO FIRE/SMOKE DAMPER. SEE 6/E6.1 FOR DETAILS. CONNECT NO MORE THAN 10 DAMPERS PER 120V CIRCUIT. SEE PANEL SCHEDULES FOR DESIGNATED CIRCUITS.
3. PROVIDE 120V CONNECTION AND ANY ASSOCIATED LOW VOLTAGE WIRING REQUIRED FOR TRAP PRIMER FROM NEAREST 120V CIRCUIT. COORDINATE EXACT REQUIREMENTS WITH DIVISION 22.
4. PROVIDE ELECTRICAL CONNECTION TO MECHANICAL EQUIPMENT. SEE MECHANICAL AND PLUMBING EQUIPMENT CONNECTION SCHEDULES ON E7.2 FOR DETAILS.
5. PROVIDE #10 COPPER WIRING FOR RECEPTACLES FED FROM PANEL 2SB1 TO COMPENSATE FOR VOLTAGE DROP.
6. PROVIDE (1) 1" CONDUIT IN TRENCH FROM WALL TO DESK FOR POWER CONNECTIONS.

KEY PLAN

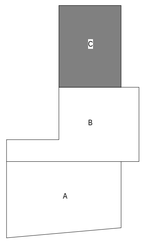

NORTH

BID/PERMIT SET

CONDITIONAL USE NUMBER: CU2018-0016
DESIGN REVIEW NUMBER: DR2018-0314
SITE DEVELOPMENT PERMIT NUMBER: TBD
BUILDING PERMIT NUMBER: TBD

REGISTERED PROFESSIONAL ENGINEER
86828PE
OREGON
JULY 10, 2012
OANA STEPHENS
03/13/19
EXPIRES: 6/30/2020

POWER PLAN, SECOND LEVEL - AREA C
ACMA
BEAVERTON SCHOOL DISTRICT

E2.2C
74-18109-00
03/14/2019
REVISIONS

DLR Group
Architecture Engineering Planning Interiors

© 2019, DLR Group Architecture & Engineering Inc., an Oregon corporation, ALL RIGHTS RESERVED

C:\Revit\74-18109-00_ACMA_MEP_2018_Central_ostephens.rvt
3/13/2019 11:23:01 PM

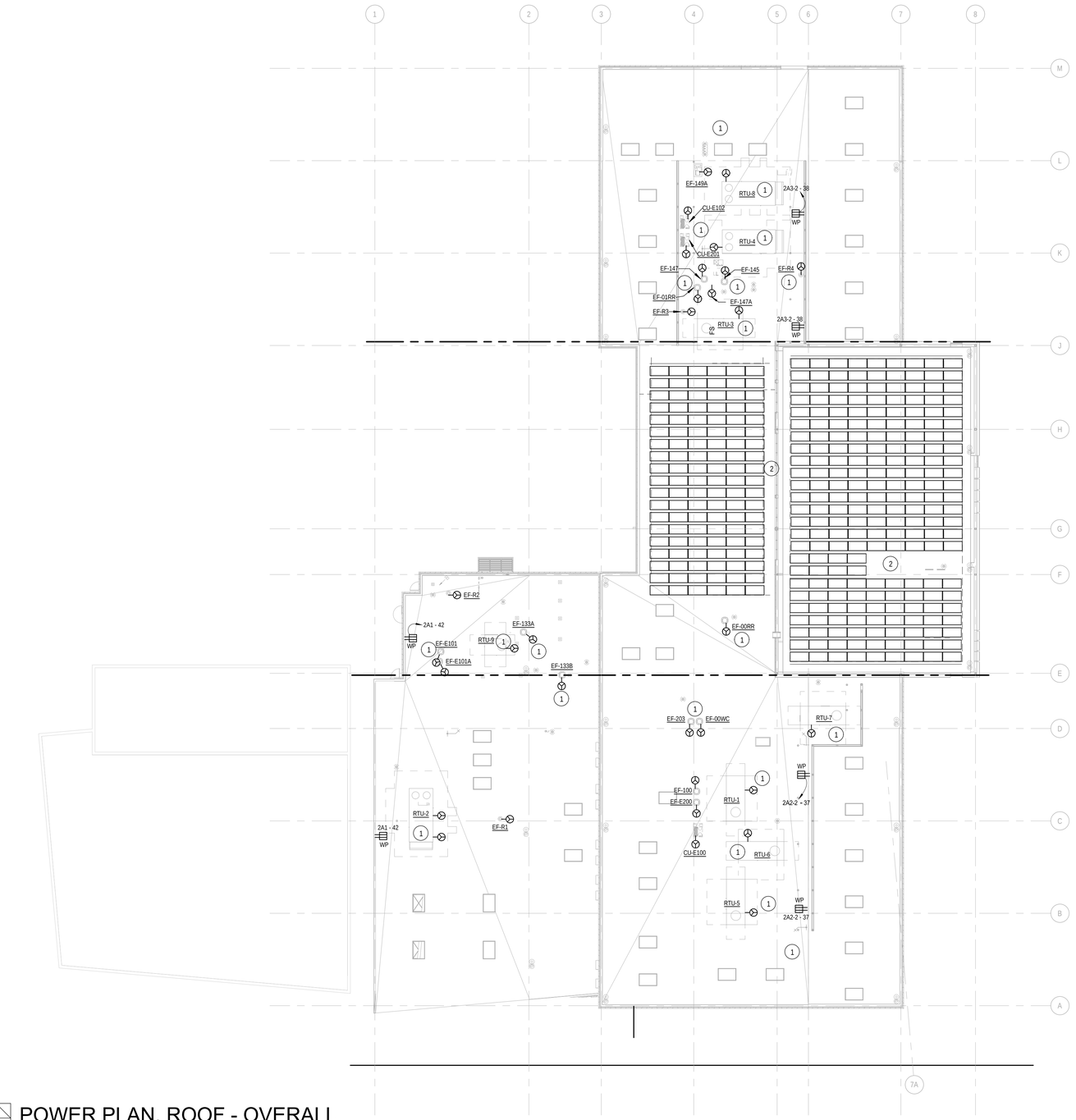

POWER PLAN, ROOF - OVERALL

NORTH SCALE: 1" = 20'-0"

LEGEND NOTES

LEGEND NOTES ARE COMMON TO ALL
SOME NOTES MAY NOT APPLY TO THIS SHEET

KEYED NOTES

1 PROVIDE ELECTRICAL CONNECTION TO MECHANICAL EQUIPMENT. SEE MECHANICAL AND PLUMBING EQUIPMENT CONNECTION SCHEDULES ON E7.2 FOR DETAILS.

2 PROPOSED PV ARRAY AREA.

GENERAL SOLAR NOTES

A. SOLAR ARRAY IS DESIGN-BUILD. APPROXIMATE LAYOUT SHOWN FOR BIDDING PURPOSES ONLY.

B. OVERALL DESIGN IS SIZED FOR APPROXIMATELY 120KW SOLAR ARRAY. THE FOLLOWING COUNTS ARE APPROXIMATE BASED ON AVAILABLE ROOF AREA.

PROPOSED PANEL COUNT : 329
INVERTER COUNT : 2

C. THIS DESIGN WILL ALSO INCLUDE CONDUIT RUN AND CONNECTION TO SWITCHGEAR. SEE SHEET E5.1 FOR CONNECTION.

KEY PLAN

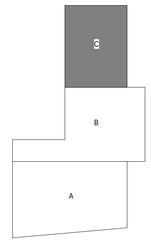

BID/PERMIT SET

CONDITIONAL USE NUMBER: CU2018-0016
DESIGN REVIEW NUMBER: DR2018-0314
SITE DEVELOPMENT PERMIT NUMBER: TBD
BUILDING PERMIT NUMBER: TBD

REGISTERED PROFESSIONAL ENGINEER
86828PE
OREGON
JULY 10, 2012
OHNA STEPHENS
01/9/19
EXPIRES: 6/30/2020

POWER PLAN, ROOF - OVERALL
ACMA
BEAVERTON SCHOOL DISTRICT

E2.3
74-18109-00
03/14/2019
REVISIONS

DLR Group
Architecture Engineering Planning Interiors

©2019, DLR Group Architecture & Engineering Inc., an Oregon corporation, ALL RIGHTS RESERVED

C:\Revit\74-18109-00_ACMA_MEP_2018_Central_ostephens.rvt
3/13/2019 11:23:19 PM



NORTH

FIRE ALARM PLAN, FIRST LEVEL - AREA A

SCALE: 1/8" = 1'-0"

LEGEND NOTES

LEGEND NOTES ARE COMMON TO ALL
SOME NOTES MAY NOT APPLY TO THIS SHEET

KEYED NOTES

KEY PLAN

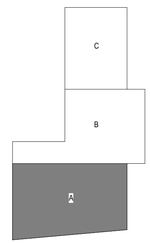

BID/PERMIT SET

CONDITIONAL USE NUMBER: CU2018-0016
DESIGN REVIEW NUMBER: DR2018-0114
SITE DEVELOPMENT PERMIT NUMBER: TBD
BUILDING PERMIT NUMBER: TBD

REGISTERED PROFESSIONAL ENGINEER
86828PE
OREGON
JULY 10, 2012
DANA STEPHENS
EXPIRES: 6/30/2020
03/13/19

FIRE ALARM PLAN, FIRST LEVEL - AREA A
ACMA
BEAVERTON SCHOOL DISTRICT

E3.1A
74-18109-00
03/14/2019
REVISIONS

DLR Group
Architecture Engineering Planning Interiors

©2019, DLR Group Architecture & Engineering Inc., an Oregon corporation, ALL RIGHTS RESERVED

C:\Revit\74-18109-00_ACMA_MEP_2018_Central_p_raghu.rvt
3/13/2019 4:32:39 PM

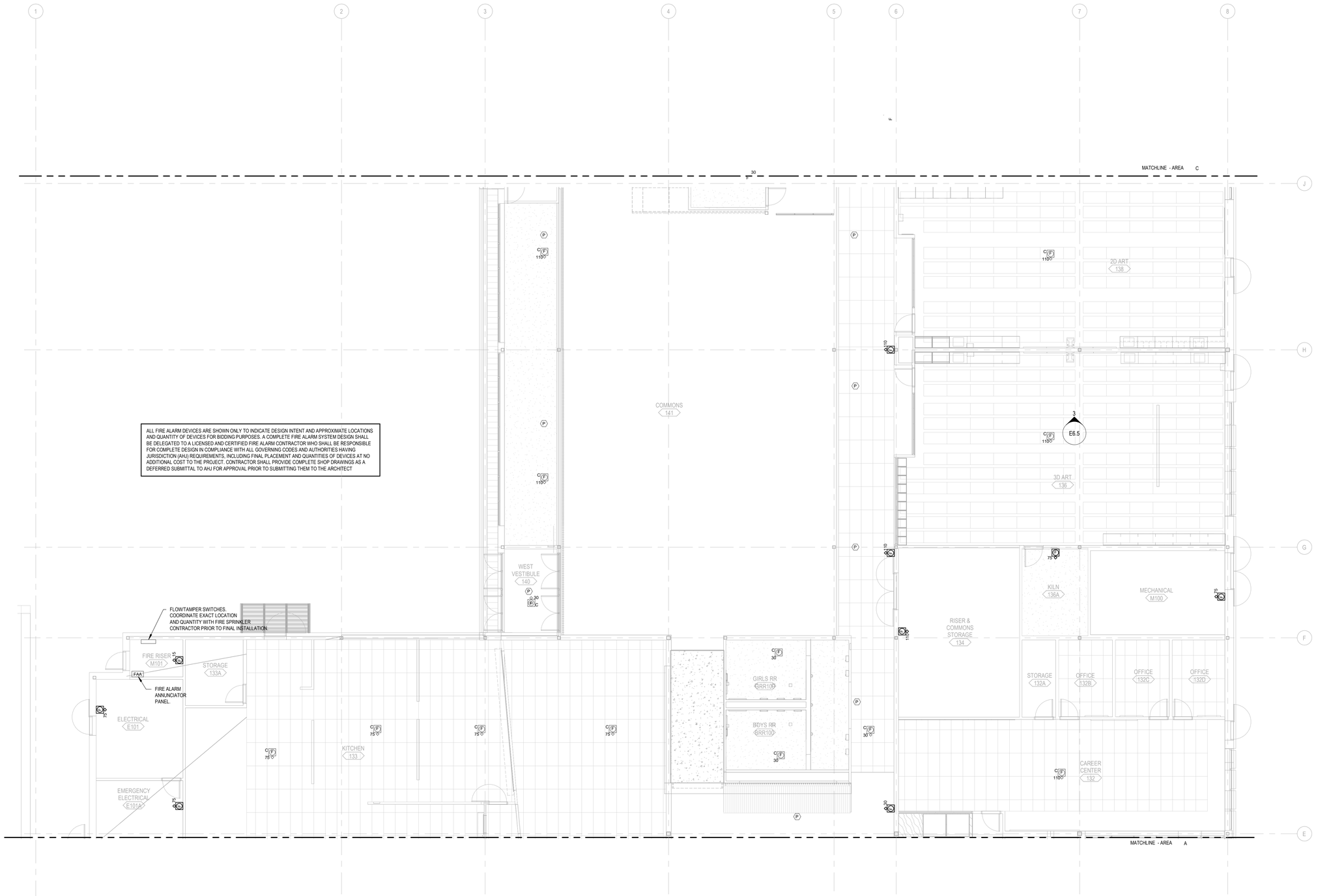

ALL FIRE ALARM DEVICES ARE SHOWN ONLY TO INDICATE DESIGN INTENT AND APPROXIMATE LOCATIONS AND QUANTITY OF DEVICES FOR BIDDING PURPOSES. A COMPLETE FIRE ALARM SYSTEM DESIGN SHALL BE DELEGATED TO A LICENSED AND CERTIFIED FIRE ALARM CONTRACTOR WHO SHALL BE RESPONSIBLE FOR COMPLETE DESIGN IN COMPLIANCE WITH ALL GOVERNING CODES AND AUTHORITIES HAVING JURISDICTION (AHJ) REQUIREMENTS, INCLUDING FINAL PLACEMENT AND QUANTITIES OF DEVICES AT NO ADDITIONAL COST TO THE PROJECT. CONTRACTOR SHALL PROVIDE COMPLETE SHOP DRAWINGS AS A DEFERRED SUBMITTAL TO AHJ FOR APPROVAL PRIOR TO SUBMITTING THEM TO THE ARCHITECT

NORTH

FIRE ALARM PLAN, FIRST LEVEL - AREA B

SCALE: 1/8" = 1'-0"

LEGEND NOTES

LEGEND NOTES ARE COMMON TO ALL
SOME NOTES MAY NOT APPLY TO THIS SHEET

KEYED NOTES

KEY PLAN

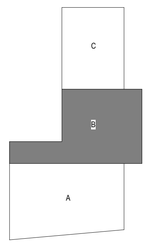

NORTH

BID/PERMIT SET

CONDITIONAL USE NUMBER: CU2018-0016
DESIGN REVIEW NUMBER: DR2018-0114
SITE DEVELOPMENT PERMIT NUMBER: TBD
BUILDING PERMIT NUMBER: TBD

REGISTERED PROFESSIONAL ENGINEER
86828PE
OREGON
JULY 10, 2012
OANA STEPHENS
03/13/19
EXPIRES: 6/30/2020

FIRE ALARM PLAN, FIRST LEVEL - AREA B
ACMA
BEAVERTON SCHOOL DISTRICT

E3.1B
74-18109-00
03/14/2019
REVISIONS

DLR Group
Architecture Engineering Planning Interiors

© 2019, DLR Group Architecture & Engineering inc., an Oregon corporation, ALL RIGHTS RESERVED

C:\Revit\74-18109-00_ACMA_MEP_2018_Central_p_raghu.rvt
3/13/2019 4:32:41 PM

ALL FIRE ALARM DEVICES ARE SHOWN ONLY TO INDICATE DESIGN INTENT AND APPROXIMATE LOCATIONS AND QUANTITY OF DEVICES FOR BIDDING PURPOSES. A COMPLETE FIRE ALARM SYSTEM DESIGN SHALL BE DELEGATED TO A LICENSED AND CERTIFIED FIRE ALARM CONTRACTOR WHO SHALL BE RESPONSIBLE FOR COMPLETE DESIGN IN COMPLIANCE WITH ALL GOVERNING CODES AND AUTHORITIES HAVING JURISDICTION (AHJ) REQUIREMENTS, INCLUDING FINAL PLACEMENT AND QUANTITIES OF DEVICES AT NO ADDITIONAL COST TO THE PROJECT. CONTRACTOR SHALL PROVIDE COMPLETE SHOP DRAWINGS AS A DEFERRED SUBMITTAL TO AHJ FOR APPROVAL PRIOR TO SUBMITTING THEM TO THE ARCHITECT

SCIENCE (CHEM) 147
SCIENCE 145
PREP STORAGE 149A
SCIENCE PREP 149
SCIENCE MECHANICAL M102
SCIENCE HALL 151
SCIENCE CLASSROOM 146
SCIENCE CLASSROOM 144
MOP C101
STORAGE 151A
DESIGN STUDIO 143
ELECTRICAL E102
WC UR103
GIRLS RR GRR10
BOYS RR BRR10
TEACHER PLANNING 142

MATCHLINE - AREA B

FIRE ALARM PLAN, FIRST LEVEL - AREA C

SCALE: 1/8" = 1'-0"

NORTH

LEGEND NOTES

LEGEND NOTES ARE COMMON TO ALL
SOME NOTES MAY NOT APPLY TO THIS SHEET

KEYED NOTES

KEY PLAN

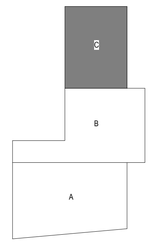

NORTH

BID/PERMIT SET

CONDITIONAL USE NUMBER: CU2018-0016
DESIGN REVIEW NUMBER: DR2018-0114
SITE DEVELOPMENT PERMIT NUMBER: TBD
BUILDING PERMIT NUMBER: TBD

REGISTERED PROFESSIONAL ENGINEER
86828PE
OREGON
JULY 10, 2012
OANA STEPHENS
EXPIRES: 6/30/2020
3/13/19

FIRE ALARM PLAN, FIRST LEVEL - AREA C
ACMA
BEAVERTON SCHOOL DISTRICT

E3.1C
74-18109-00
03/14/2019
REVISIONS

DLR Group
Architecture Engineering Planning Interiors

©2019, DLR Group Architecture & Engineering Inc., an Oregon corporation, ALL RIGHTS RESERVED

C:\Revit\74-18109-00_ACMA_MEP_2018_Central_p_raghu.rvt
3/13/2019 4:32:48 PM



FIRE ALARM PLAN, SECOND LEVEL - AREA A

NORTH

SCALE: 1/8" = 1'-0"

LEGEND NOTES

LEGEND NOTES ARE COMMON TO ALL
SOME NOTES MAY NOT APPLY TO THIS SHEET

KEYED NOTES

KEY PLAN

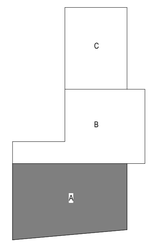

BID/PERMIT SET

CONDITIONAL USE NUMBER: CU2018-0016
DESIGN REVIEW NUMBER: DR2018-0114
SITE DEVELOPMENT PERMIT NUMBER: TBD
BUILDING PERMIT NUMBER: TBD

REGISTERED PROFESSIONAL ENGINEER
86828PE
OREGON
JULY 10, 2012
OANA STEPHENS
EXPIRES: 6/30/2020
03/13/19

FIRE ALARM PLAN, SECOND LEVEL - AREA A
ACMA
BEAVERTON SCHOOL DISTRICT

E3.2A
74-18109-00
03/14/2019
REVISIONS

DLR Group
Architecture Engineering Planning Interiors

©2019, DLR Group Architecture & Engineering Inc., an Oregon corporation, ALL RIGHTS RESERVED

C:\Revit\74-18109-00_ACMA_MEP_2018_Central_p_raghu.rvt
3/13/2019 4:32:55 PM

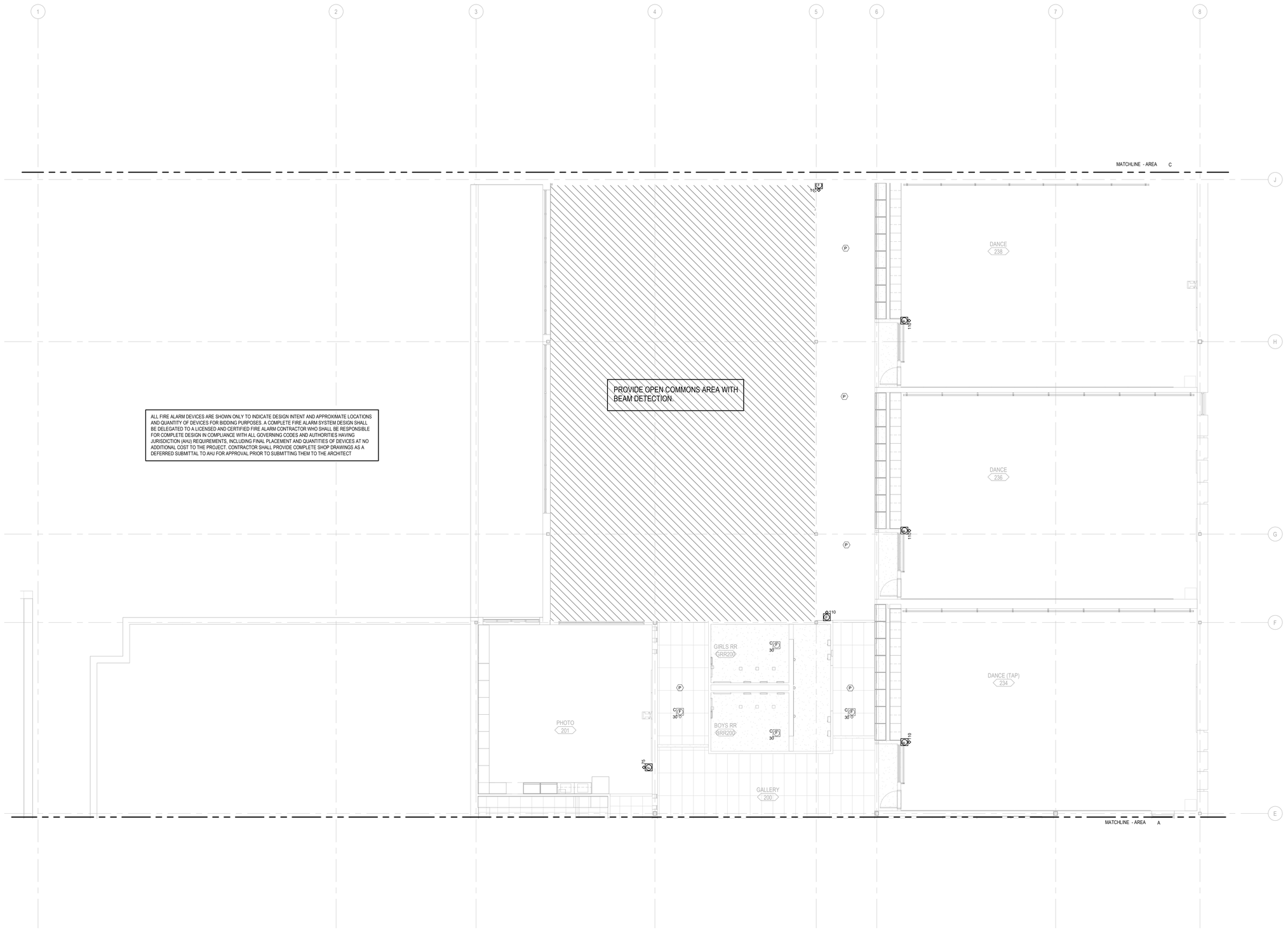

FIRE ALARM PLAN, SECOND LEVEL - AREA B
SCALE: 1/8" = 1'-0"

LEGEND NOTES

LEGEND NOTES ARE COMMON TO ALL
SOME NOTES MAY NOT APPLY TO THIS SHEET

KEYED NOTES

KEY PLAN

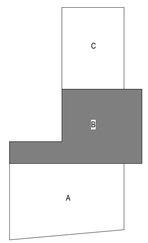

BID/PERMIT SET

CONDITIONAL USE NUMBER: CU2018-0016
DESIGN REVIEW NUMBER: DR2018-0114
SITE DEVELOPMENT PERMIT NUMBER: TBD
BUILDING PERMIT NUMBER: TBD

REGISTERED PROFESSIONAL ENGINEER
86828PE
OREGON
JULY 10, 2012
OANA STEPHENS
EXPIRES: 6/30/2020
3/13/19

FIRE ALARM PLAN, SECOND LEVEL - AREA B
ACMA
BEAVERTON SCHOOL DISTRICT

E3.2B
74-18109-00
03/14/2019
REVISIONS

DLR Group
Architecture Engineering Planning Interiors

©2019, DLR Group Architecture & Engineering Inc., an Oregon corporation, ALL RIGHTS RESERVED

C:\Revit\74-18109-00_ACMA_MEP_2018_Central_p_raghu.rvt
3/13/2019 4:33:01 PM

LEGEND NOTES

LEGEND NOTES ARE COMMON TO ALL
SOME NOTES MAY NOT APPLY TO THIS SHEET

KEYED NOTES

ALL FIRE ALARM DEVICES ARE SHOWN ONLY TO INDICATE DESIGN INTENT AND APPROXIMATE LOCATIONS AND QUANTITY OF DEVICES FOR BIDDING PURPOSES. A COMPLETE FIRE ALARM SYSTEM DESIGN SHALL BE DELEGATED TO A LICENSED AND CERTIFIED FIRE ALARM CONTRACTOR WHO SHALL BE RESPONSIBLE FOR COMPLETE DESIGN IN COMPLIANCE WITH ALL GOVERNING CODES AND AUTHORITIES HAVING JURISDICTION (AHJ) REQUIREMENTS, INCLUDING FINAL PLACEMENT AND QUANTITIES OF DEVICES AT NO ADDITIONAL COST TO THE PROJECT. CONTRACTOR SHALL PROVIDE COMPLETE SHOP DRAWINGS AS A DEFERRED SUBMITTAL TO AHJ FOR APPROVAL PRIOR TO SUBMITTING THEM TO THE ARCHITECT

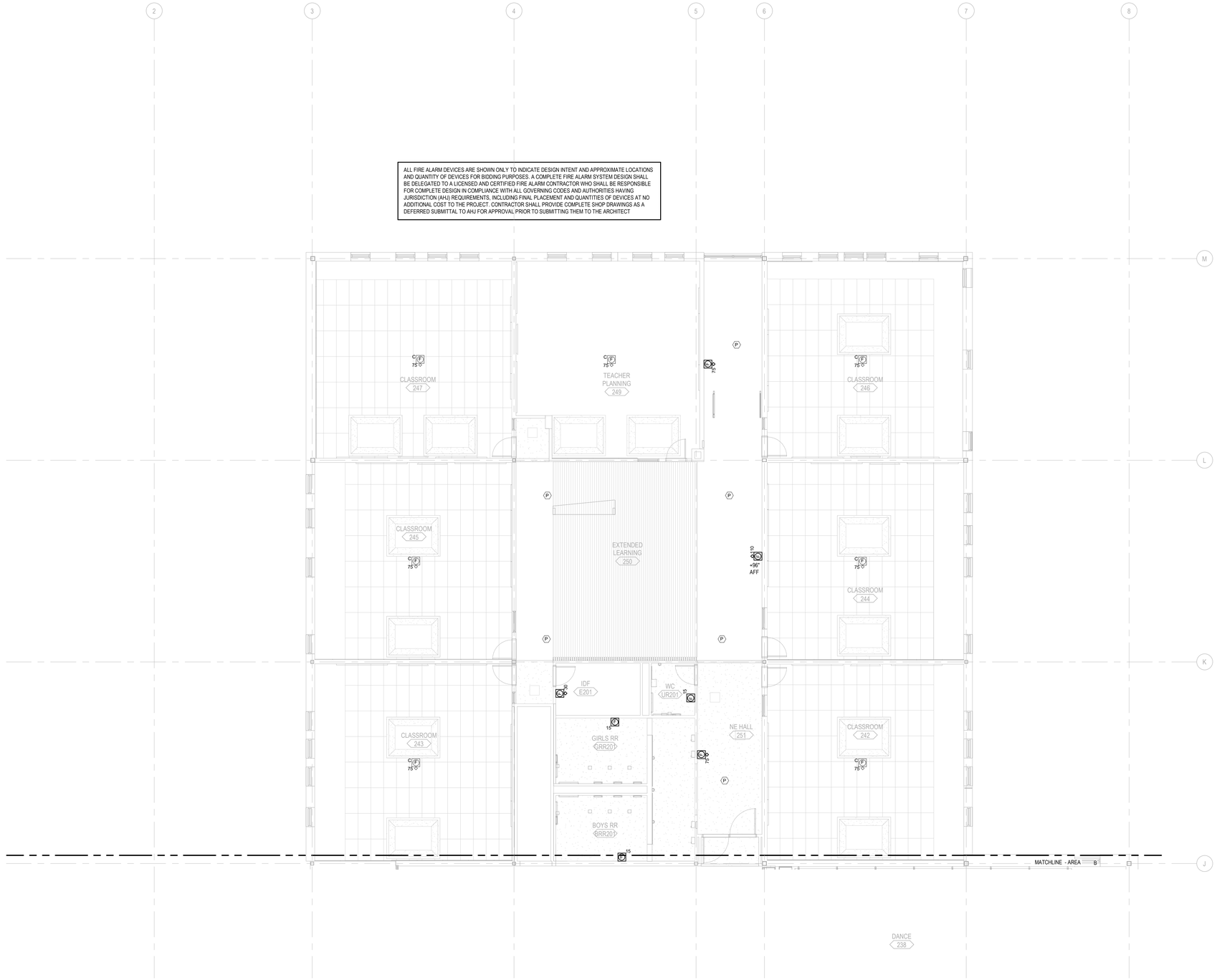

NORTH

FIRE ALARM PLAN, SECOND LEVEL - AREA

SCALE: 1/8" = 1'-0"

KEY PLAN

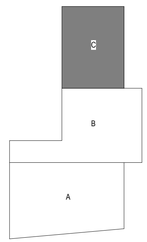

NORTH

BID/PERMIT SET

CONDITIONAL USE NUMBER: CU2018-0016
DESIGN REVIEW NUMBER: DR2018-0114
SITE DEVELOPMENT PERMIT NUMBER: TBD
BUILDING PERMIT NUMBER: TBD

REGISTERED PROFESSIONAL ENGINEER
86828PE
OREGON
JULY 10, 2012
OANA STEPHENS
03/13/19
EXPIRES: 6/30/2020

FIRE ALARM PLAN, SECOND LEVEL - AREA C
ACMA
BEAVERTON SCHOOL DISTRICT

E3.2C
74-18109-00
03/14/2019
REVISIONS

DLR Group
Architecture Engineering Planning Interiors

©2019, DLR Group Architecture & Engineering Inc., an Oregon corporation, ALL RIGHTS RESERVED

C:\Revit\74-18109-00_ACMA_MEP_2018_Central_p_raghu.rvt
3/13/2019 4:33:06 PM

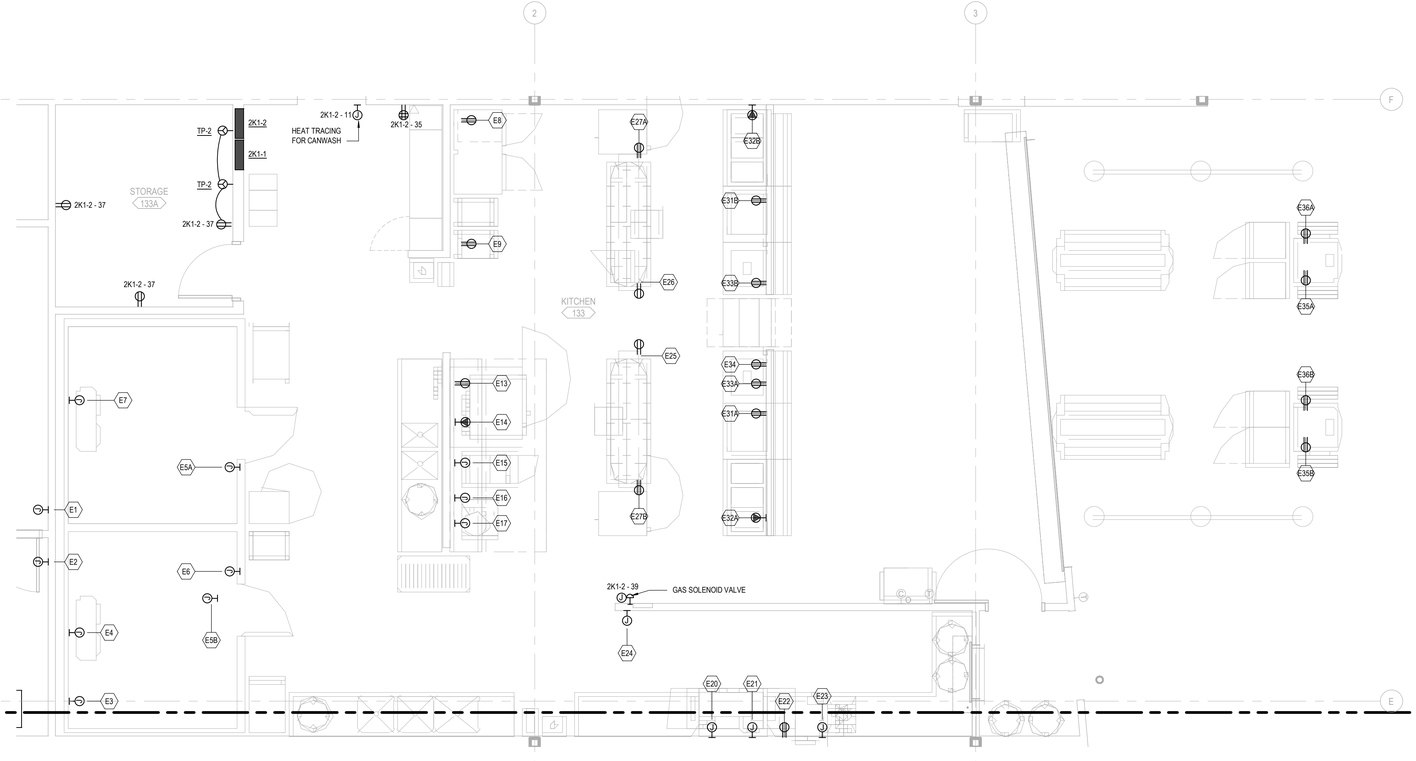

KITCHEN EQUIPMENT CONNECTION SCHEDULE

MARK NO.	Comments	VOLT/PHASE - VA	RECEPTACLE/ DISCONNECT	MOUNTING HEIGHT	FEEDER	PANEL	CIRCUIT NUMBER	REMARKS
E1	WALK-IN COOLER CONDENSING UNIT	208 V/3-1728 VA	J-BOX	CEILING	3#12, 1#12G, 3/4"C	2K1-1	1,3,5	
E2	WALK-IN FREEZER CONDENSING UNIT	208 V/3-3711 VA	J-BOX	CEILING	3#12, 1#12G, 3/4"C	2K1-1	7,9,11	
E3	WALK-IN DRAIN LINE HEATER	120 V/1-500 VA	J-BOX	CEILING	2#12, 1#12G, 3/4"C	2K1-1	13	
E4	WALK-IN COOLER EVAPORATOR	120 V/1-360 VA	J-BOX	CEILING	2#12, 1#12G, 3/4"C	2K1-1	15	
E5A	(2) WALK-IN LIGHTS	120 V/1-160 VA	J-BOX	CEILING	2#12, 1#12G, 3/4"C	2K1-1	17	
E5B	(2) WALK-IN LIGHTS	120 V/1-160 VA	J-BOX	CEILING	2#12, 1#12G, 3/4"C	2K1-1	17	
E6	WALK-IN DOOR HEATER	120 V/1-500 VA	J-BOX	CEILING	2#12, 1#12G, 3/4"C	2K1-1	19	
E7	WALK-IN FREEZER EVAPORATOR	208 V/2-2080 VA	J-BOX	CEILING	2#12, 1#12G, 3/4"C	2K1-1	21,23	
E8	REACH-IN REFRIGERATOR	120 V/1-984 VA	NEMA 5-15R	77"	2#12, 1#12G, 3/4"C	2K1-1	25	FURNISHED W/ NEMA 5-15P
E9	MOBILE HOT HOLDING CABINET	120 V/1-1500 VA	NEMA 5-15R	36"	2#12, 1#12G, 3/4"C	2K1-1	27	FURNISHED W/ NEMA 5-15P
E13	CONVECTION OVEN	120 V/1-720 VA	NEMA 5-15R	33"	2#12, 1#12G, 3/4"C	2K1-1	29	FURNISHED W/ NEMA 5-15P
E14	COMBI-OVEN STEAMER	208 V/2-1248 VA	NEMA 6-15R*	38"	2#12, 1#12G, 3/4"C	2K1-1	31,33	FURNISHED W/ NEMA 6-15P*
E15	BOIL COOK TOP	208 V/2-6000 VA	J-BOX	18"	2#10, 1#10G, 3/4"C	2K1-1	35,37	
E16	12-GALLON TILTING KETTLE WITH STAND	208 V/3-12285 VA	J-BOX	35"	3#8, 1#10G, 3/4"C	2K1-1	2,4,6	
E17	(4) CANOPY HOOD LIGHTS	120 V/1-320 VA	J-BOX	CEILING	2#12, 1#12G, 3/4"C	2K1-1	39	
E20	WAREWASHER (TANK HEAT/MOTORS)	208 V/3-15000 VA	J-BOX	64"	3#6, 1#8G, 3/4"C	2K1-1	14,16,18	INTERCONNECT WITH LIMIT SWITCH
E21	WAREWASHER BOOSTER HEATER	208 V/3-30000 VA	J-BOX	64"	3#2, 1#6G, 1 1/4"C	2K1-1	20,22,24	
E22	WAREWASHER DETERGENT FEED	120 V/1-1440 VA	NEMA 5-15R	64"	2#12, 1#12G, 3/4"C	2K1-1	26	DEDICATED CIRCUIT
E23	DISPOSER	120 V/1-2808 VA	J-BOX	14"	3#12, 1#12G, 3/4"C	2K1-1	28,30,32	CONNECTIONS TO DISPOSER, SOLENOID & SWITCH
E24	FIRE PROTECTION SYSTEM	120 V/1-1000 VA	J-BOX	102"	2#12, 1#12G, 3/4"C	2K1-1	34	
E25	CONVENIENCE	120 V/1-1440 VA	NEMA 5-15R	34"	2#12, 1#12G, 3/4"C	2K1-1	36	DEDICATED CIRCUIT, EXTEND FROM FLOOR STUB
E26	MICROWAVE OVEN	120 V/1-1600 VA	NEMA 5-15R	34"	2#12, 1#12G, 3/4"C	2K1-2	1	FURNISHED W/ NEMA 5-15P. EXTEND FROM FLOOR STUB
E27A	MOBILE HOT HOLDING CABINET	120 V/1-1440 VA	NEMA 5-15R	34"	2#12, 1#12G, 3/4"C	2K1-2	3	FURNISHED W/ NEMA 5-15P. EXTEND FROM FLOOR STUB
E27B	MOBILE HOT HOLDING CABINET	120 V/1-1440 VA	NEMA 5-15R	34"	2#12, 1#12G, 3/4"C	2K1-2	5	FURNISHED W/ NEMA 5-15P. EXTEND FROM FLOOR STUB
E31A	HEATED PASS-THRU GRAB 'N GO CASE	120 V/1-1644 VA	NEMA 5-15R	24"	2#12, 1#12G, 3/4"C	2K1-2	7	FURNISHED W/ NEMA5-15P
E31B	HEATED PASS-THRU GRAB 'N GO CASE	120 V/1-1644 VA	NEMA 5-15R	24"	2#12, 1#12G, 3/4"C	2K1-2	9	FURNISHED W/ NEMA5-15P
E32A	HOT/COLD FOOD SERVING COUNTER	208 V/2-5460 VA	TO BE VERIFIED	24"	2#10, 1#10G, 3/4"C	2K1-2	13,15	VERIFY NEMA CONFIG. INCLUDES LITE & HEAT LAMP WIRED TO SWITCH. RUN THRU F.G. POST
E32B	HOT/COLD FOOD SERVING COUNTER	208 V/2-5460 VA	TO BE VERIFIED	24"	2#10, 1#10G, 3/4"C	2K1-2	31,33	VERIFY NEMA CONFIG. INCLUDES LITE & HEAT LAMP WIRED TO SWITCH. RUN THRU F.G. POST
E33A	COLD FOOD SERVING COUNTER	120 V/1-960 VA	NEMA 5-15R	24"	2#12, 1#12G, 3/4"C	2K1-2	17	FURNISHED W/ NEMA 5-15P. INCLUDES LITE WIRED TO SWITCH, RUN THRU F.G. POST
E33B	COLD FOOD SERVING COUNTER	120 V/1-960 VA	NEMA 5-15R	24"	2#12, 1#12G, 3/4"C	2K1-2	19	FURNISHED W/ NEMA 5-15P. INCLUDES LITE WIRED TO SWITCH, RUN THRU F.G. POST
E34	MOBILE REFRIGERATED MILK COOLER	120 V/1-480 VA	NEMA 5-15R	24"	2#12, 1#12G, 3/4"C	2K1-2	21	FURNISHED W/ NEMA 5-15P
E35A	REFRIGERATED MERCHANDISE CASE	120 V/1-1080 VA	NEMA 5-15R	FLOOR	2#12, 1#12G, 3/4"C	2K1-2	23	TOTAL CONNECTION. R.I. FREEZER-EACH FURNISHED WITH NEMA 5-15P
E35B	REFRIGERATED MERCHANDISE CASE	120 V/1-1080 VA	NEMA 5-15R	FLOOR	2#12, 1#12G, 3/4"C	2K1-2	25	TOTAL CONNECTION. R.I. FREEZER-EACH FURNISHED WITH NEMA 5-15P
E36A	POINT OF SALE SYSTEM	120 V/1-1000 VA		FLOOR	2#12, 1#12G, 3/4"C	2K1-2	27	ISOLATED AND DEDICATED
E36B	POINT OF SALE SYSTEM	120 V/1-1000 VA		FLOOR	2#12, 1#12G, 3/4"C	2K1-2	29	ISOLATED AND DEDICATED

*SEE FS1.4 FOR FOOD SERVICE ELECTRICAL COORDINATION.

NORTH

ENLARGED KITCHEN POWER PLAN

SCALE: 1/4" = 1'-0"

BID/PERMIT SET

CONDITIONAL USE NUMBER: CU2018-0016
DESIGN REVIEW NUMBER: DR2018-0114
SITE DEVELOPMENT PERMIT NUMBER: TBD
BUILDING PERMIT NUMBER: TBD

REGISTERED PROFESSIONAL ENGINEER
86828PE
OREGON
JULY 10, 2012
CHINA STEPHENS
EXPIRES: 6/30/2020
3/13/19

ENLARGED KITCHEN PLAN
ACMA
BEAVERTON SCHOOL DISTRICT

E4.1
74-18109-00
03/14/2019
REVISIONS

DLR Group
Architecture Engineering Planning Interiors

© 2019, DLR Group Architecture & Engineering inc., an Oregon corporation, ALL RIGHTS RESERVED

C:\Revit\74-18109-00_ACMA_MEP_2018_Central_p_raghu.rvt
3/13/2019 4:33:11 PM

TRANSFORMER FEEDER TABLE

GENERAL PURPOSE TRANSFORMERS			
KVA	PRI (PRIMARY)	SEC (SECONDARY)	GEC
15	3#10,#10G-3/4"C	4#6,#8G-1"C	#8
30	3#6,#10G-1"C	4#1,#6G-1 1/2"C	#6
45	3#4,#8G-1 1/4"C	4#1/0,#6G-2"C	#6
75	3#1,#8G-1 1/2"C	4#4/0,#2G-2 1/2"C	#2
112.5	3#1/0,#6G-2"C	(2)2"C EACH WITH 4#3/0, #1/0G PARALLEL FEEDER	#1/0
150	3#4/0,#2G-2 1/2"C	(2)3"C EACH WITH 4-250Kcmil, #1/0G-PARALLEL FEEDER	#1/0
225	3-350Kcmil,#2G-3"C	(2)3"C EACH WITH 4-350Kcmil, #2/0G-PARALLEL FEEDER	#2/0
K4-RATED TRANSFORMERS			
15K	3#10,#10G-3/4"C	3#4,#2(N),#8G-1 1/2"C	#8
30K	3#6,#10G-1"C	3#1/0,#3/0(N),#6G-2 1/2"C	#6
45K	3#4,#8G-1 1/4"C	3#3/0,#250Kcmil(N),#4G-2 1/2"C	#4
75K	3#1,#8G-1 1/2"C	3-300Kcmil,2#4/0(N),#1/0G-3"C	#1/0

- GEC (GROUNDING ELECTRODE CONDUCTOR PER NEC 250-66)

3ø FEEDER SCHEDULE (COPPER)

MARK	FEEDER 4W				FEEDER 3W			
(AMPACITY)	# SETS	ø & N	GND	C	# SETS	ø	GND	C
15	1	12	12	3/4"	1	12	12	3/4"
20	1	12	12	3/4"	1	12	12	3/4"
30	1	10	10	3/4"	1	10	10	3/4"
40	1	8	10	1"	1	8	10	3/4"
50	1	6	10	1"	1	6	10	1"
60	1	4	10	1 1/4"	1	4	10	1"
70	1	4	8	1 1/4"	1	4	8	1 1/4"
80	1	3	8	1 1/4"	1	3	8	1 1/4"
90	1	2	8	1 1/2"	1	2	8	1 1/4"
100	1	1	8	1 1/2"	1	1	8	1 1/2"
110	1	1	6	1 1/2"	1	1	6	1 1/2"
125	1	1/0	6	2"	1	1/0	6	1 1/2"
150	1	1/0	6	2"	1	1/0	6	1 1/2"
175	1	2/0	6	2"	1	2/0	6	2"
200	1	3/0	6	2"	1	3/0	6	2"
225	1	4/0	4	2 1/2"	1	4/0	4	2"
250	1	250	4	3"	1	250	4	2 1/2"
300	1	350	4	3"	1	350	4	3"
400	2	3/0	3	2 1/2"	2	3/0	3	2"
450	2	4/0	3	2 1/2"	2	4/0	3	2"
500	2	250	2	3"	2	250	2	2 1/2"
600	2	350	1	3"	2	350	1	3"
700	2	500	1/0	4"	2	500	1/0	3-1/2"
800	3	300	1/0	3"	3	300	1/0	2 1/2"
1000	3	400	2/0	3"	3	400	2/0	3"
1200	4	350	3/0	3-1/2"	4	350	3/0	3"
1600	5	400	4/0	3-1/2"	5	400	4/0	3"
2000	6	500	250	4"	6	500	250	3-1/2"
2500	7	500	350	4"	7	500	350	3-1/2"
3000	8	500	400	4"	8	500	400	3-1/2"

NOTES

FEEDER SHALL BE 4-WIRE (4W) UNLESS DENOTED OTHERWISE.

ALL FEEDERS SHALL HAVE AN EQUIPMENT GROUND CONDUCTOR.

NOT ALL SIZES USED

3ø FEEDER SCHEDULE (ALUMINUM)

MARK	FEEDER 4W				FEEDER 3W			
(AMPACITY)	# SETS	ø & N	GND	C	# SETS	ø	GND	C
125	1	2/0	4	2"	1	2/0	4	2"
150	1	3/0	4	2"	1	3/0	4	2"
175	1	4/0	4	2 1/2"	1	4/0	4	2"
200	1	250	4	2 1/2"	1	250	4	2 1/2"
225	1	300	2	3"	1	300	2	2 1/2"
250	1	350	2	3"	1	350	2	2 1/2"
300	1	500	2	3-1/2"	1	500	2	3"
400	2	250	1	2-1/2"	2	250	1	2 1/2"
450	2	300	1	3"	2	300	1	2 1/2"
500	2	350	1/0	3"	2	350	1/0	2 1/2"
600	2	500	2/0	3-1/2"	2	500	2/0	3"
700	3	350	3/0	3"	3	350	3/0	3"
800	3	400	3/0	3"	3	400	3/0	3"
1000	4	350	4/0	3"	4	350	4/0	2.5"
1200	5	500	250	3-1/2"	5	500	250	3"
1600	6	400	4/0*	3"	6	350	4/0*	3"
2000	7	500	250*	3-1/2"	7	500	250*	3"
2500	9	500	350*	3-1/2"	9	500	350*	3"
3000	10	500	400*	3-1/2"	10	500	400*	3"

NOTES

ALUMINUM CONDUCTORS ARE PERMITTED FOR FEEDERS BETWEEN SWITCHBOARDS, DISTRIBUTION PANELS, PANELBOARDS, MOTOR CONTROL CENTERS, DRY TYPE TRANSFORMERS AND BUSWAY PLUG-IN UNITS ONLY.

ALUMINUM CONDUCTORS ARE NOT PERMITTED FOR CIRCUIT RATING OF 100A OR LOWER.

ALUMINUM CONDUCTORS ARE NOT PERMITTED FOR BRANCH CIRCUITS OR EQUIPMENT CONNECTIONS.

*GROUNDING CONDUCTOR FOR CIRCUIT RATING OF 1600A AND HIGER SHALL BE COPPER CONDUCTORS.

ABBREVIATIONS

SES	SERVICE ENTRANCE RATED
S.U.S.E.	SUITABLE FOR USE AS SERVICE EQUIPMENT
SCCR	SHORT CIRCUIT CURRENT RATING
Isc:	AVAILABLE SHORT CIRCUIT CURRENT IN AMPERES

SYMBOLS

GFP EQUIPMENT GROUND FAULT PROTECTION

ST SHUNT-TRIP CIRCUIT INTERRUPTER

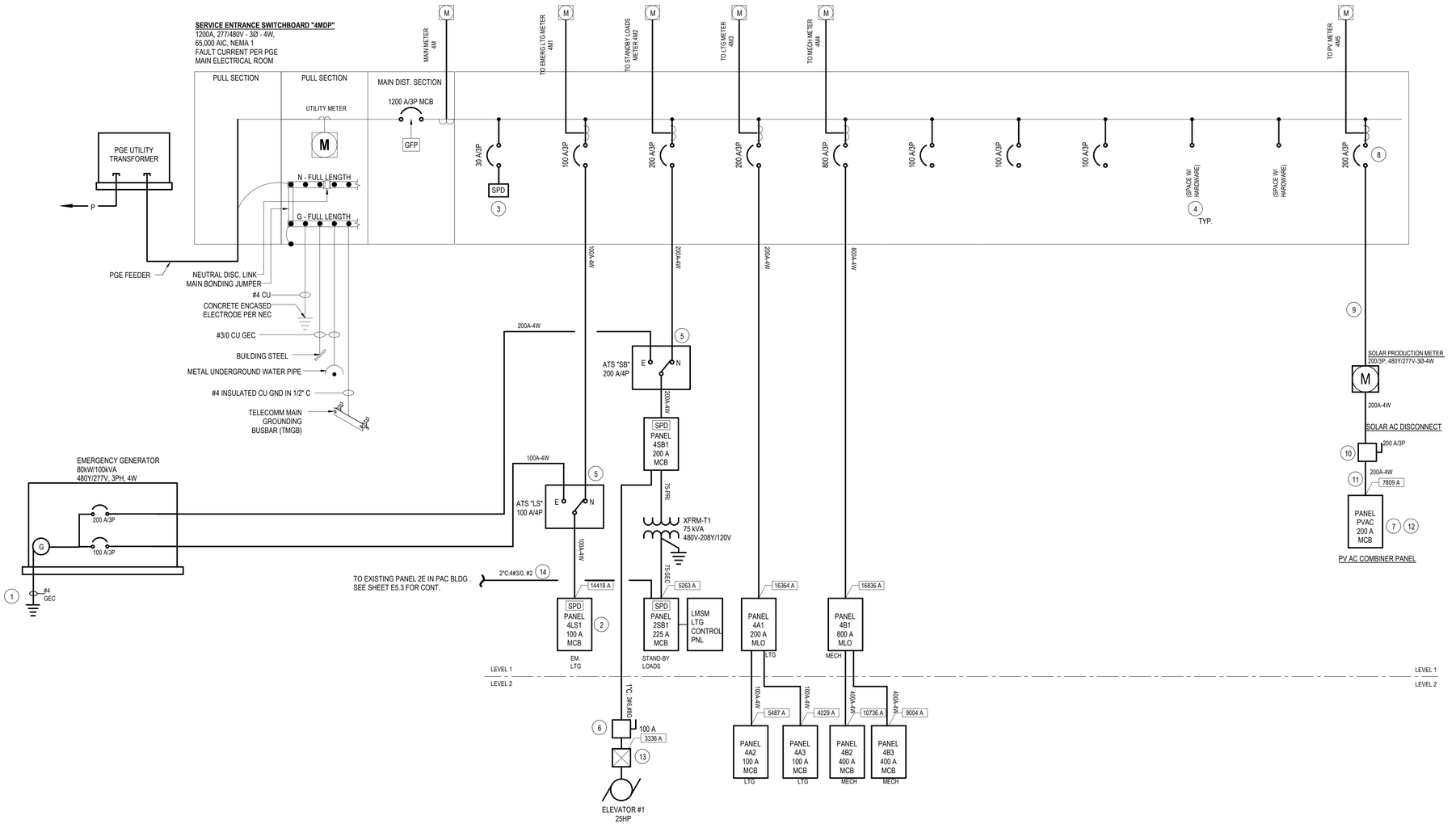

KEY NOTES

1. SEPARATELY DERIVED SYSTEM GROUNDING PER NEC.
2. PROVIDE PANELBOARD WITH FUSES EQUAL TO BUSSMAN LPJ SERIES TO COMPLY WITH SELECTIVE COORDINATION FOR EMERGENCY SYSTEMS PER NEC 700.27.
3. THE SPD SYSTEM SHALL BE COMPLETELY CONNECTED AND MOUNTED INTEGRAL WITHIN THE DEAD-FRONT OG THE SWITCHBOARD SECTION. REFER TO DIVISION 26 SPECIFICATIONS.
4. PROVIDE MANUFACTURER'S BLANK FILLERS FOR ALL UNUSED BUSSED SPACE. EACH BLANK FILLER SHALL BE IDENTIFIED INDICATING THE APPROPRIATE BREAKER SIZE THAT THE FILLER WILL ACCOMODATE IN THE FUTURE.
5. PROVIDE OPEN TRANSITION ATS, UL LISTED TO WITHSTAND RATING OF 25KWCR (WITHSTAND CURRENT RATING) MINIMUM.
6. PROVIDE BUSSMANN POWER MODULE SWITCH, MODEL PS1.
7. PROVIDE 120KW PV SYSTEM. PANELS, DISCONNECTS, AND FEEDERS ARE SHOWN FOR REFERENCE ONLY.
8. PROVIDE PV 200A/3P FUSE TO FACILITATE PV SYSTEM LOCATED ON ROOF.
9. PROVIDE CONDUIT AND FEEDER TO DISCONNECT. PROVIDE AC DISCONNECT FOR PV SYSTEM. COORDINATE EXACT LOCATION WITH ARCHITECT.
10. PROVIDE AC DISCONNECT FOR PV SYSTEM. COORDINATE EXACT LOCATION WITH ARCHITECT.
11. PROVIDE AC DISCONNECT FOR PV SYSTEM. COORDINATE EXACT LOCATION WITH ARCHITECT.
12. PV AC COMBINER PANEL PROVIDED BY PV CONTRACTOR.
13. PROVIDE LABEL ON ELEVATOR CONTROL PANEL MARKED WITH AVAILABLE SHORT CIRCUIT TO COMPLY WITH NEC 620.16.
14. FEEDER SIZE INCREASED TO COMPENSATE FOR VOLTAGE DROP.

GENERAL NOTES

A. THE CONTRACTOR SHALL BE RESPONSIBLE TO ACQUIRE ALL SPECIFICATIONS, FINAL CONSTRUCTION DRAWINGS AND INFORMATION FROM THE SERVING UTILITY CO PRIOR TO PROCEEDING WITH THE ELECTRICAL PRIMARY SERVICE INSTALLATION

B. THE CONTRACTOR/MANUFACTURER SHALL PROVIDE A COMPLETE MANUFACTURERS SHORT CIRCUIT AND SELECTIVE COORDINATION STUDY, USING THE ACTUAL TRIP CURVES OF EACH MAIN CIRCUIT BREAKER, PROTECTIVE DEVICE AND FUSES THAT ARE PART OF THE DISTRIBUTION SYSTEM FOR THIS PROJECT. THE FINAL RESULTS OF THE STUDIES SHALL BE REVIEWED, STAMPED AND SIGNED BY A REGISTERED PROFESSIONAL ELECTRICAL ENGINEER

C. THE ENTIRE ELECTRICAL SERVICE AND DISTRIBUTION EQUIPMENT, BASIS OF DESIGN GE, INCLUDING ALL OVER-CURRENT PROTECTIVE DEVICES (OCP), SHALL BE UL LISTED AS A FULLY RATED SYSTEM. THE MANUFACTURER SHALL PROVIDE THE EQUIPMENT WITH SHORT CIRCUIT CURRENT RATINGS EQUAL TO OR GREATER THAN THE AVAILABLE SHORT CIRCUIT CURRENT

D. ALL EQUIPMENT, GROUND-FAULT, OVERCURRENT DEVICES,CABLES, ETC THAT ARE REQUIRED TO BE INSPECTED AND TESTED SHALL BE PERFORMED PRIOR TO ENERGIZING.

E. EACH SWITCHBOARD SECTION AND DISTRIBUTION PANELBOARD, SHALL BE PROVIDED WITH MAXIMUM VERTICAL PHASE BUSSING FOR TOTAL CIRCUIT BREAKER UNIT MOUNTING SPACE.

F. ALL CONDUCTORS SHALL HAVE 75° TEMPERATURE RATING WITH THE FOLLOWING INSULATION TYPES.

- THHN/THWN FOR ALL CONDUCTORS #6AWG AND SMALLER
- XHHW-2 FOR ALL CONDUCTORS #4AWG AND LARGER

G. UNLESS INDICATED OTHERWISE, ALL FUSES SHALL BE DUAL ELEMENT, TIME-DELAY, CLASS RK-1. PROVIDE THE FOLLOWING FUSE TYPES AS MANUFACTURED BY 'BUSSMANN' OR COMPARABLE

- LPN-RK(250V)
- LPS-RK(600V)

H. PROVIDE ATS OPEN TRANSITION UL LISTED TO WITHSTAND RATING OF 25 KWCR (WITHSTAND CURRENT RATING) MINIMUM.

I. PROVIDE DIGITAL POWER AND ENERGY METERING SYSTEM INTEGRATED IN MAIN SWITCHBOARD, BASIS OF DESIGN GE - EPM 4500. METERS TO BE MONITORED BY DIV. 23 BUILDING ENERGY MANAGEMENT AND CONTROL SYSTEM USING BACNET PROTOCOL.

BID/PERMIT SET

CONDITIONAL USE NUMBER: CU2018-0016
DESIGN REVIEW NUMBER: DR2018-0114
SITE DEVELOPMENT PERMIT NUMBER: TBD
BUILDING PERMIT NUMBER: TBD

REGISTERED PROFESSIONAL ENGINEER
86828PE
OREGON
JULY 10, 2012
CHINA STEPHENS
EXPIRES: 6/30/2020
03/13/19

ELECTRICAL ONE-LINE DIAGRAM
ACMA
BEAVERTON SCHOOL DISTRICT

E5.1
74-18109-00
03/14/2019
REVISIONS

DLR Group
Architecture Engineering Planning Interiors

© 2019, DLR Group Architecture & Engineering Inc., an Oregon corporation, ALL RIGHTS RESERVED

C:\Revit\74-18109-00_ACMA_MEP_2018_Central_p_raghu.rvt
3/13/2019 4:33:18 PM

TRANSFORMER FEEDER TABLE

GENERAL PURPOSE TRANSFORMERS			
KVA	PRI (PRIMARY)	SEC (SECONDARY)	GEC
15	3#10,#10G-3/4"C	4#6,#8G-1"C	#8
30	3#6,#10G-1"C	4#1,#6G-1 1/2"C	#6
45	3#4,#8G-1 1/4"C	4#1/0,#6G-2"C	#6
75	3#1,#8G-1 1/2"C	4#4/0,#2G-2 1/2"C	#2
112.5	3#1/0,#6G-2"C	(2)#2"C EACH WITH 4#3/0, #1/0G PARALLEL FEEDER	#1/0
150	3#4/0,#2G-2 1/2"C	(2)3"C EACH WITH 4-250Kcmil, #1/0G-PARALLEL FEEDER	#1/0
225	3-350Kcmil,#2G-3"C	(2)3"C EACH WITH 4-350Kcmil, #2/0G-PARALLEL FEEDER	#2/0
K4-RATED TRANSFORMERS			
15K	3#10,#10G-3/4"C	3#4,#2(N),#8G-1 1/2"C	#8
30K	3#6,#10G-1"C	3#1/0,#3/0(N),#6G-2 1/2"C	#6
45K	3#4,#8G-1 1/4"C	3#3/0,#250Kcmil(N),#4G-2 1/2"C	#4
75K	3#1,#8G-1 1/2"C	3-300Kcmil,2#4/0(N),#1/0G-3"C	#1/0

- GEC (GROUNDING ELECTRODE CONDUCTOR PER NEC 250-66)

3ø FEEDER SCHEDULE (COPPER)

MARK	FEEDER 4W				FEEDER 3W			
(AMPACITY)	# SETS	ø & N	GND	C	# SETS	ø	GND	C
15	1	12	12	3/4"	1	12	12	3/4"
20	1	12	12	3/4"	1	12	12	3/4"
30	1	10	10	3/4"	1	10	10	3/4"
40	1	8	10	1"	1	8	10	3/4"
50	1	6	10	1"	1	6	10	1"
60	1	4	10	1 1/4"	1	4	10	1"
70	1	4	8	1 1/4"	1	4	8	1 1/4"
80	1	3	8	1 1/4"	1	3	8	1 1/4"
90	1	2	8	1 1/2"	1	2	8	1 1/4"
100	1	1	8	1 1/2"	1	1	8	1 1/2"
110	1	1	6	1 1/2"	1	1	6	1 1/2"
125	1	1/0	6	2"	1	1/0	6	1 1/2"
150	1	1/0	6	2"	1	1/0	6	1 1/2"
175	1	2/0	6	2"	1	2/0	6	2"
200	1	3/0	6	2"	1	3/0	6	2"
225	1	4/0	4	2 1/2"	1	4/0	4	2"
250	1	250	4	3"	1	250	4	2 1/2"
300	1	350	4	3"	1	350	4	3"
400	2	3/0	3	2 1/2"	2	3/0	3	2"
450	2	4/0	3	2 1/2"	2	4/0	3	2"
500	2	250	2	3"	2	250	2	2 1/2"
600	2	350	1	3"	2	350	1	3"
700	2	500	1/0	4"	2	500	1/0	3-1/2"
800	3	300	1/0	3"	3	300	1/0	2 1/2"
1000	3	400	2/0	3"	3	400	2/0	3"
1200	4	350	3/0	3-1/2"	4	350	3/0	3"
1600	5	400	4/0	3-1/2"	5	400	4/0	3"
2000	6	500	250	4"	6	500	250	3-1/2"
2500	7	500	350	4"	7	500	350	3-1/2"
3000	8	500	400	4"	8	500	400	3-1/2"

NOTES

FEEDER SHALL BE 4-WIRE (4W) UNLESS DENOTED OTHERWISE.

ALL FEEDERS SHALL HAVE AN EQUIPMENT GROUND CONDUCTOR.

NOT ALL SIZES USED

3ø FEEDER SCHEDULE (ALUMINUM)

MARK	FEEDER 4W				FEEDER 3W			
(AMPACITY)	# SETS	ø & N	GND	C	# SETS	ø	GND	C
125	1	2/0	4	2"	1	2/0	4	2"
150	1	3/0	4	2"	1	3/0	4	2"
175	1	4/0	4	2 1/2"	1	4/0	4	2"
200	1	250	4	2 1/2"	1	250	4	2 1/2"
225	1	300	2	3"	1	300	2	2 1/2"
250	1	350	2	3"	1	350	2	2 1/2"
300	1	500	2	3-1/2"	1	500	2	3"
400	2	250	1	2-1/2"	2	250	1	2 1/2"
450	2	300	1	3"	2	300	1	2 1/2"
500	2	350	1/0	3"	2	350	1/0	2 1/2"
600	2	500	2/0	3-1/2"	2	500	2/0	3"
700	3	350	3/0	3"	3	350	3/0	3"
800	3	400	3/0	3"	3	400	3/0	3"
1000	4	350	4/0	3"	4	350	4/0	2.5"
1200	5	500	250	3-1/2"	5	500	250	3"
1600	6	400	4/0*	3"	6	350	4/0*	3"
2000	7	500	250*	3-1/2"	7	500	250*	3"
2500	9	500	350*	3-1/2"	9	500	350*	3"
3000	10	500	400*	3-1/2"	10	500	400*	3"

NOTES

ALUMINUM CONDUCTORS ARE PERMITTED FOR FEEDERS BETWEEN SWITCHBOARDS, DISTRIBUTION PANELS, PANELBOARDS, MOTOR CONTROL CENTERS, DRY TYPE TRANSFORMERS AND BUSWAY PLUG-IN UNITS ONLY.

ALUMINUM CONDUCTORS ARE NOT PERMITTED FOR CIRCUIT RATING OF 100A OR LOWER.

ALUMINUM CONDUCTORS ARE NOT PERMITTED FOR BRANCH CIRCUITS OR EQUIPMENT CONNECTIONS.

*GROUNDING CONDUCTOR FOR CIRCUIT RATING OF 1600A AND HIGER SHALL BE COPPER CONDUCTORS.

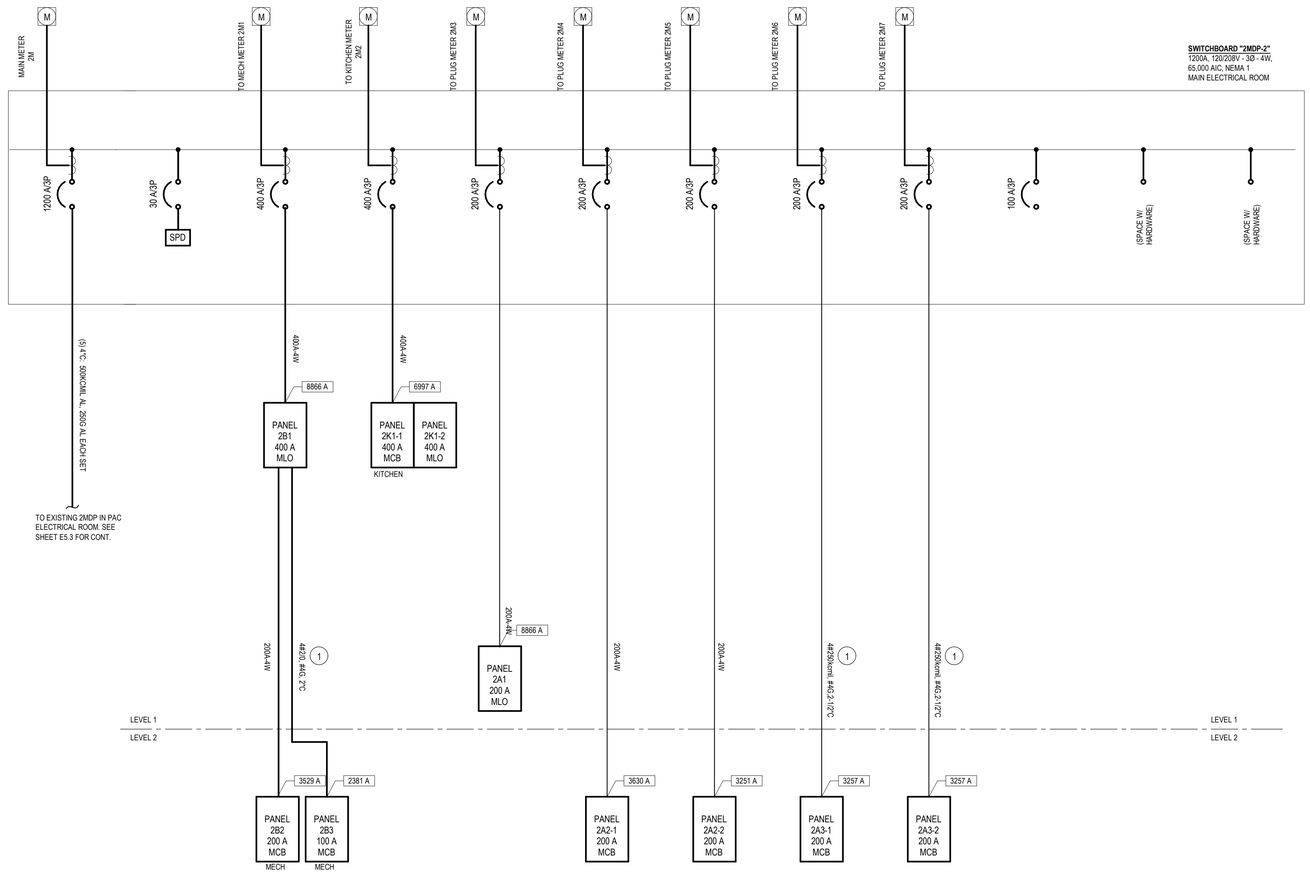

GENERAL NOTES

A. THE CONTRACTOR SHALL BE RESPONSIBLE TO ACQUIRE ALL SPECIFICATIONS, FINAL CONSTRUCTION DRAWINGS AND INFORMATION FROM THE SERVING UTILITY CO PRIOR TO PROCEEDING WITH THE ELECTRICAL PRIMARY SERVICE INSTALLATION

B. THE CONTRACTOR/MANUFACTURER SHALL PROVIDE A COMPLETE MANUFACTURERS SHORT CIRCUIT AND SELECTIVE COORDINATION STUDY, USING THE ACTUAL TRIP CURVES OF EACH MAIN CIRCUIT BREAKER, PROTECTIVE DEVICE AND FUSES THAT ARE PART OF THE DISTRIBUTION SYSTEM FOR THIS PROJECT. THE FINAL RESULTS OF THE STUDIES SHALL BE REVIEWED, STAMPED AND SIGNED BY A REGISTERED ROFESSIONAL ELECTRICAL ENGINEER

C. THE ENTIRE ELECTRICAL SERVICE AND DISTRIBUTION EQUIPMENT, BASIS OF DESIGN GE, INCLUDING ALL OVER-CURRENT ROTECTIVE DEVICES (OCP), SHALL BE UL LISTED AS A FULLY RATED YSTEM. THE MANUFACTURER SHALL PROVIDE THE EQUIPMENT WITH HORT CIRCUIT CURRENT RATINGS EQUAL TO OR GREATER THAN THE AVAILABLE SHORT CIRCUIT CURRENT

D. ALL EQUIPMENT, GROUND-FAULT, OVERCURRENT DEVICES,CABLES, ETC THAT ARE REQUIRED TO BE INSPECTED AND TESTED SHALL BE PERFORMED PRIOR TO ENERGIZING.

E. EACH SWITCHBOARD SECTION AND DISTRIBUTION PANELBOARD, SHALL BE PROVIDED WITH MAXIMUM VERTICAL PHASE BUSSING FOR TOTAL CIRCUIT BREAKER UNIT MOUNTING SPACE.

F. ALL CONDUCTORS SHALL HAVE 90° TEMPERATURE RATING WITH THE FOLLOWING INSULATION TYPES:

- THIN/THWN FOR ALL CONDUCTORS #6AWG AND SMALLER
- XHHW-2 FOR ALL CONDUCTORS #4AWG AND LARGER

G. UNLESS INDICATED OTHERWISE, ALL FUSES SHALL BE DUAL ELEMENT, TIME-DELAY, CLASS RK-1. PROVIDE THE FOLLOWING FUSE TYPES AS MANUFACTURED BY 'BUSSMANN' OR COMPARABLE

- LPN-RK(250V)
- LPS-RK(600V)

H. PROVIDE ATS OPEN TRANSITION UL LISTED TO WITHSTAND RATING OF 25 KWCR (WITHSTAND CURRENT RATING) MINIMUM.

I. PROVIDE DIGITAL POWER AND ENERGY METERING SYSTEM INTEGRATED IN MAIN SWITCHBOARD, BASIS OF DESIGN GE - EPM 4500. METERS TO BE MONITORED BY DIV. 23 BUILDING ENERGY MANAGEMENT AND CONTROL SYSTEM USING BACNET PROTOCOL.

KEY NOTES

1 FEEDER SIZE INCREASED TO COMPENSATE FOR VOLTAGE DROP.

ABBREVIATIONS

SES	SERVICE ENTRANCE RATED
S.U.S.E.	SUITABLE FOR USE AS SERVICE EQUIPMENT
SCCR	SHORT CIRCUIT CURRENT RATING
Isc:	AVAILABLE SHORT CIRCUIT CURRENT IN AMPERES

SYMBOLS

GFP	EQUIPMENT GROUND FAULT PROTECTION
ST	SHUNT-TRIP CIRCUIT INTERRUPTER

BID/PERMIT SET

CONDITIONAL USE NUMBER: CU2018-0016
DESIGN REVIEW NUMBER: DR2018-8114
SITE DEVELOPMENT PERMIT NUMBER: TBD
BUILDING PERMIT NUMBER: TBD

REGISTERED PROFESSIONAL ENGINEER
86828PE
OREGON
JULY 10, 2012
CANA STEPHENS
EXPIRES: 6/30/2020
03/13/19

ELECTRICAL ONE-LINE DIAGRAM
ACMA
BEAVERTON SCHOOL DISTRICT

E5.2
74-18109-00
03/14/2019
REVISIONS

DLR Group
Architecture Engineering Planning Interiors

©2019, DLR Group Architecture & Engineering inc., an Oregon corporation, ALL RIGHTS RESERVED

C:\Revit\74-18109-00_ACMA_MEP_2018_Central_p_raghu.rvt
3/13/2019 4:33:25 PM

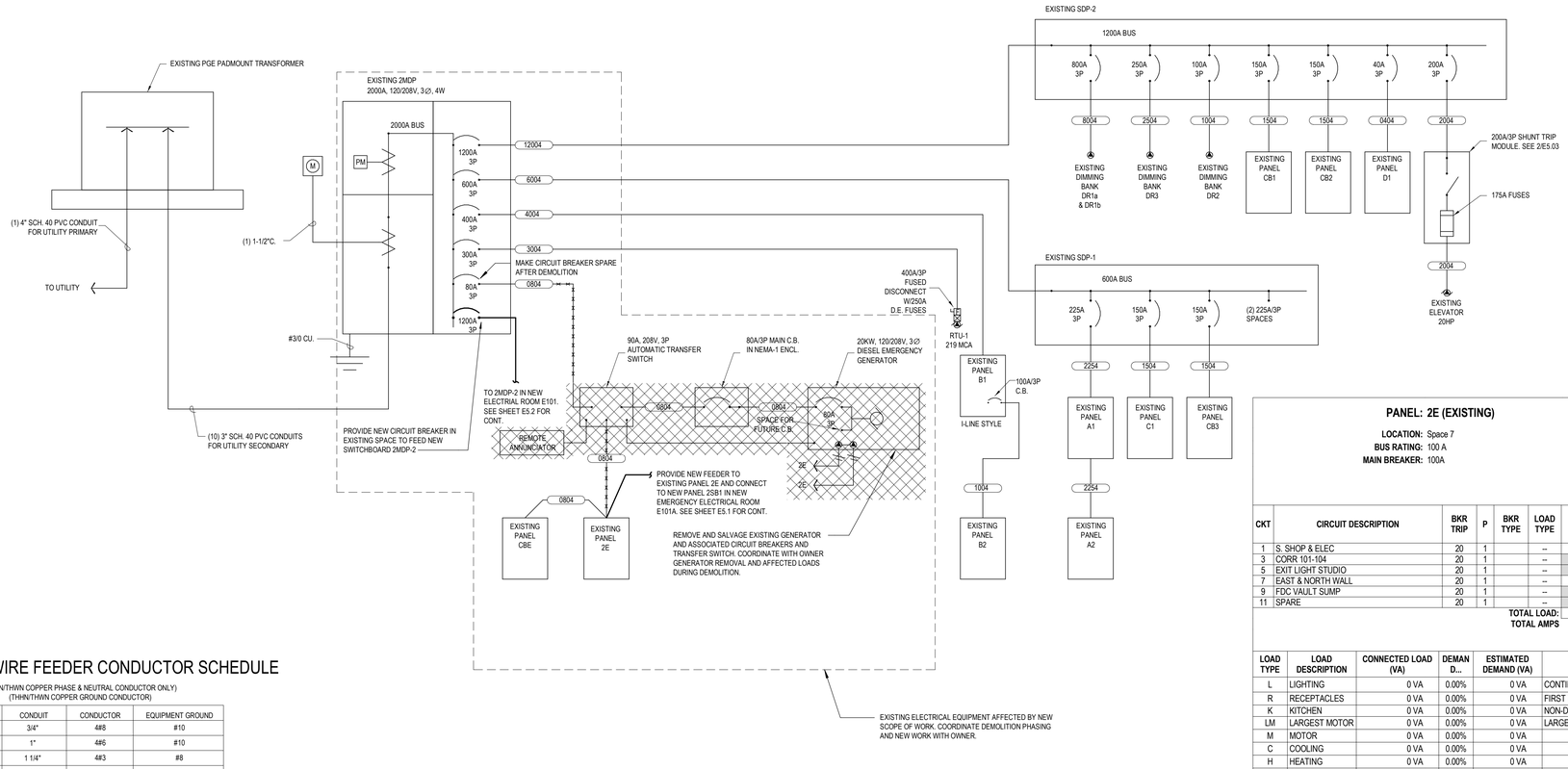

COPPER 4-WIRE FEEDER CONDUCTOR SCHEDULE

(THHN/THWN COPPER PHASE & NEUTRAL CONDUCTOR ONLY)
(THHN/THWN COPPER GROUND CONDUCTOR)

TAG	CONDUIT	CONDUCTOR	EQUIPMENT GROUND
0404	3/4"	4#8	#10
0604	1"	4#6	#10
0804	1 1/4"	4#3	#8
0904	1 1/4"	4#3	#8
1004	1 1/2"	4#2	#8
1504	2"	4#1/0	#6
2004	2"	4#3/0	#6
2254	2 1/2"	4#4/0	#4
2504	3"	4#250KCM	#4
3004	3"	4#350KCM	#4
4004	4"	4#500KCM	#3
6004	(2) 3" EACH W/	4#350KCM	#1
8004	(2) 3" EACH W/	4#500KCM	#1/0
12004	(2) 3" EACH W/	4#350KCM	#3/0

FAULT CALCULATION RESULTS (2MDP)

EQUIPMENT	3PH SYMMETRICAL FAULT CURRENT	MINIMUM PANEL BUS BAR & CIRCUIT BREAKER AIC RATING (AMPS)
2MDP	36,799	42K
SDP-1	34,800	42K
SDP-2	25,600	42K
A1	29,500	42K
A2	27,400	42K
B1	33,800	42K
B2	3,600	10K
C1	5,600	10K
D1	9,600	10K
CB1	20,400	22K
CB2	20,400	22K
CB3	5,600	10K
CBE	20,800	22K
2E	2,800	10K
DIMMING BANK DR1A & DR1B	24,800	42K
DIMMING BANK DR2	18,000	22K
DIMMING BANK DR3	23,000	42K

SWITCHBOARD: 2MDP (EXISTING)

LOCATION Space 7
BUS RATING 2000 A
MAIN BREAKER 2000/3

VOLTAGE: 208Y / 120
PHASES: 3
WIRES: 4
SCCR:

CKT	CIRCUIT DESCRIPTION	BKR TRIP	P	BKR TYPE	LOAD TYPE	LOAD (kVA)	NOTES
1							
2							
3							
4							
5							
6	NEW 2MDP-2	1200 A	3		Motor;...	347	
7	EXISTING METERED LOAD x 1.25	1200 A	3		--	162	
8							
9							
10							
11							
12							
13							
14							
15							
16							
17							
18							
19							
20							
					TOTAL LOAD:	509 kVA	
					TOTAL AMPS:	1413 A	

LOAD TYPE	LOAD DESCRIPTION	CONNECTED LOAD (VA)	DEMAN D...	ESTIMATED DEMAND (VA)	DEMAND FACTOR NOTES	BKR TYPE	PANEL TOTALS
L	LIGHTING	10000 VA	125.00%	12500 VA	CONTINUOUS LOAD @ 125%	G = GFCI (5mA)	
R	RECEPTACLES	127460 VA	53.92%	68730 VA	FIRST 10KVA @ 100%, REMAINDER @ 50%	GP = GFCI (30mA)	**CONNECTED LOAD:** 509 kVA
K	KITCHEN	111244 VA	65.00%	72309 VA	NON-DWELLING KITCHEN EQUIPMENT, NEC ART. 220	ST = SHUNT TRIP	**ESTIMATED DEMAND:** 414 kVA
LM	LARGEST MOTOR	0 VA	0.00%	0 VA	LARGEST MOTOR, NEC ART. 430	LO = LOCK OUT	**CONNECTED CURRENT:** 1413 A
M	MOTOR	71950 VA	100.00%	71950 VA			**EMD CURRENT:** 1149 A
C	COOLING	11772 VA	100.00%	11772 VA			
H	HEATING	12295 VA	100.00%	12295 VA			
O	OTHER	2000 VA	100.00%	2000 VA			
Spare	SPARE	162000 VA	100.00%	162000 VA			

NOTES:

PANEL: 2E (EXISTING)

LOCATION: Space 7
BUS RATING: 100 A
MAIN BREAKER: 100A

VOLTS: 208Y / 120
PHASES: 3
WIRES: 4
SCCR:

MOUNTING: SURFACE
FED FROM: 2SB1
INTEGRAL SPD: Type 1
LUG ACCESSORIES: SEE ONE-LINE

CKT	CIRCUIT DESCRIPTION	BKR TRIP	P	BKR TYPE	LOAD TYPE	PHASE A (VA)		PHASE B (VA)		PHASE C (VA)		LOAD TYPE	BKR TYPE	P	BKR TRIP	CIRCUIT DESCRIPTION	CKT
1	S. SHOP & ELEC	20	1		--	310	0					--		1	20	SPARE	2
3	CORR 101-104	20	1		--			1,188	0			--		1	20	SPARE	4
5	EXIT LIGHT STUDIO	20	1		--					5	0	--		1	20	SPARE	6
7	EAST & NORTH WALL	20	1		--	911	6,885							3	100	EXISTING PANEL CBE	8
9	FDC VAULT SUMP	20	1		--			1,470	4,706			--	--	--	--	--	10
11	SPARE	20	1		--					0	6,620	--	--	--	--	--	12
					TOTAL LOAD:	8106 VA		7364 VA		6625 VA							
					TOTAL AMPS	68 A		62 A		55 A							

LOAD TYPE	LOAD DESCRIPTION	CONNECTED LOAD (VA)	DEMAN D...	ESTIMATED DEMAND (VA)	DEMAND FACTOR NOTES	BKR TYPE	PANEL TOTALS
L	LIGHTING	0 VA	0.00%	0 VA	CONTINUOUS LOAD @ 125%	G = GFCI (5mA)	
R	RECEPTACLES	0 VA	0.00%	0 VA	FIRST 10KVA @ 100%, REMAINDER @ 50%	GP = GFCI (30mA)	**CONNECTED LOAD:** 22 kVA
K	KITCHEN	0 VA	0.00%	0 VA	NON-DWELLING KITCHEN LOADS, NEC ART. 220	ST = SHUNT TRIP	**ESTIMATED DEMAND:** 22 kVA
LM	LARGEST MOTOR	0 VA	0.00%	0 VA	LARGEST MOTOR, NEC ART. 430	LO = LOCK OUT	**CONNECTED CURRENT:** 61 A
M	MOTOR	0 VA	0.00%	0 VA			**EMD CURRENT:** 61 A
C	COOLING	0 VA	0.00%	0 VA			
H	HEATING	0 VA	0.00%	0 VA			
O	OTHER	0 VA	0.00%	0 VA			
Spare	SPARE	22095 VA	100.00%	22095 VA			

NOTES:

PANEL: CBE (EXISTING)

LOCATION: Space 2
BUS RATING: 100 A
MAIN BREAKER: 100A MLO

VOLTS: 208Y / 120
PHASES: 3
WIRES: 4
SCCR:

MOUNTING: SURFACE
FED FROM: 2E (EXISTING)
INTEGRAL SPD: Type 1
LUG ACCESSORIES: SEE ONE-LINE

CKT	CIRCUIT DESCRIPTION	BKR TRIP	P	BKR TYPE	LOAD TYPE	PHASE A (VA)		PHASE B (VA)		PHASE C (VA)		LOAD TYPE	BKR TYPE	P	BKR TRIP	CIRCUIT DESCRIPTION	CKT
1	HOUSE EMERG. LTS	20	1		--	1,875	1,250					--		1	20	HOUSE EMERG. LTS	2
3	HOUSE EMERG. LTS	20	1		--			1,250	1,375			--		1	20	HOUSE EMERG. LTS	4
5	HOUSE EMERG. LTS	20	1		--					1,875	1,350	--		1	20	BLACK BOX EMERG. LTS	6
7	WORK EMERG. LTS	20	1		--	1,200	788					--		1	20	N LOBBY DN LTS	8
9	WORK EMERG. LTS	20	1		--			900	0			--		1	20	SPARE	10
11	RESTROOMS	20	1		--					320	1,575	--		1	20	GALLERY 100 & 111	12
13	EXIT SIGNS	20	1		--	20	402					--		1	20	CORR C200 & C201	14
15	STAIRS/STORAGE	20	1		--			1,181	0			--		1	20	SPARE	16
17	N & S EXTERIOR CANOPY	20	1		--					1,425	75	--		1	20	VESTIBULE	18
19	REHEARSAL STUDIO	20	1		--	1,350	0					--		1	20	SPARE	20
21	SPARE	20	1		--			0	0			--		1	20	SPARE	22
23	SPARE	20	1		--					0	0	--		1	20	SPARE	24
25																	26
27																	28
29																	30
					TOTAL LOAD:	6885 VA		4706 VA		6620 VA							
					TOTAL AMPS	60 A		39 A		58 A							

LOAD TYPE	LOAD DESCRIPTION	CONNECTED LOAD (VA)	DEMAN D...	ESTIMATED DEMAND (VA)	DEMAND FACTOR NOTES	BKR TYPE	PANEL TOTALS
L	LIGHTING	0 VA	0.00%	0 VA	CONTINUOUS LOAD @ 125%	G = GFCI (5mA)	
R	RECEPTACLES	0 VA	0.00%	0 VA	FIRST 10KVA @ 100%, REMAINDER @ 50%	GP = GFCI (30mA)	**CONNECTED LOAD:** 18 kVA
K	KITCHEN	0 VA	0.00%	0 VA	NON-DWELLING KITCHEN LOADS, NEC ART. 220	ST = SHUNT TRIP	**ESTIMATED DEMAND:** 18 kVA
LM	LARGEST MOTOR	0 VA	0.00%	0 VA	LARGEST MOTOR, NEC ART. 430	LO = LOCK OUT	**CONNECTED CURRENT:** 51 A
M	MOTOR	0 VA	0.00%	0 VA			**EMD CURRENT:** 51 A
C	COOLING	0 VA	0.00%	0 VA			
H	HEATING	0 VA	0.00%	0 VA			
O	OTHER	0 VA	0.00%	0 VA			
Spare	SPARE	18211 VA	100.00%	18211 VA			

NOTES:

BID/PERMIT SET

CONDITIONAL USE NUMBER: CU2018-0016
DESIGN REVIEW NUMBER: DR2018-0114
SITE DEVELOPMENT PERMIT NUMBER: TBD
BUILDING PERMIT NUMBER: TBD

REGISTERED PROFESSIONAL ENGINEER
86828PE
OREGON
JULY 10, 2012
DANA STEPHENS
EXPIRES: 6/30/2019
03/13/19

PAC ONE-LINE DIAGRAM
ACMA
BEAVERTON SCHOOL DISTRICT

E5.3
74-18109-00
03/14/2019
REVISIONS

DLR Group
Architecture Engineering Planning Interiors

©2019, DLR Group Architecture & Engineering Inc., an Oregon corporation, ALL RIGHTS RESERVED

C:\Revit\74-18109-00_ACMA_MEP_2018_Central_p_raghu.rvt
3/13/2019 4:33:25 PM

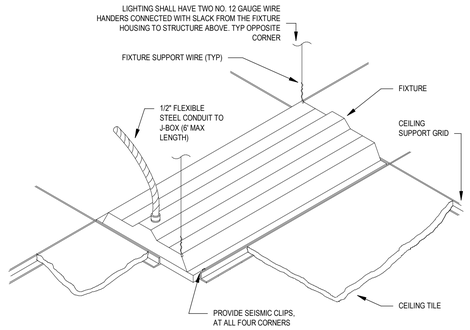

1 E6.1 RECESSED FIXTURE SEISMIC SUPPORT

NO SCALE

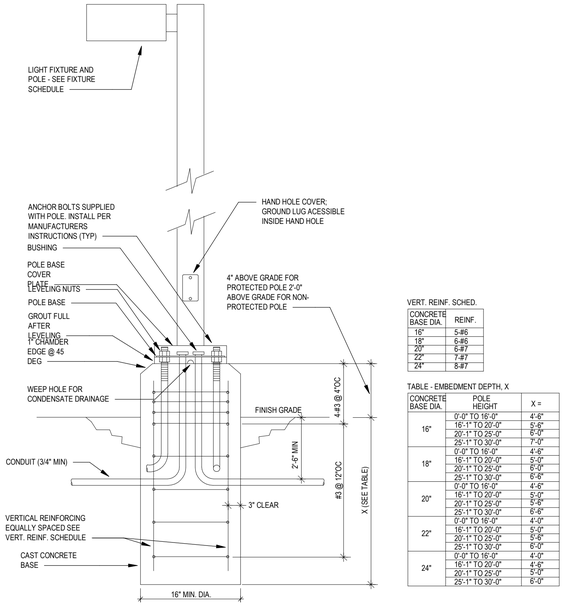

VERT. REINF. SCHED.

CONCRETE BASE DIA.	REINF.
16"	5-#6
18"	6-#6
20"	6-#7
22"	7-#7
24"	8-#7

TABLE - EMBEDMENT DEPTH, X

CONCRETE BASE DIA.	POLE HEIGHT	X =
16"	0'-0" TO 16'-0"	4'-6"
	16'-1" TO 20'-0"	5'-6"
	20'-1" TO 25'-0"	6'-0"
	25'-1" TO 30'-0"	7'-0"
18"	0'-0" TO 16'-0"	4'-6"
	16'-1" TO 20'-0"	5'-0"
	20'-1" TO 25'-0"	6'-0"
	25'-1" TO 30'-0"	6'-6"
20"	0'-0" TO 16'-0"	4'-6"
	16'-1" TO 20'-0"	5'-0"
	20'-1" TO 25'-0"	5'-6"
	25'-1" TO 30'-0"	6'-6"
22"	0'-0" TO 16'-0"	4'-0"
	16'-1" TO 20'-0"	5'-0"
	20'-1" TO 25'-0"	5'-6"
	25'-1" TO 30'-0"	6'-0"
24"	0'-0" TO 16'-0"	4'-0"
	16'-1" TO 20'-0"	4'-6"
	20'-1" TO 25'-0"	5'-0"
	25'-1" TO 30'-0"	6'-0"

NOTE: 1. SACK RUB SMOOTH CONCRETE BASE OF ALL PHYSICAL DEFORMITIES.
2. SEE L6.3 FOR ADDITIONAL LANDSCAPE POLE DETAILS.

2 E6.1 LIGHT POLE W/ BASE

NO SCALE

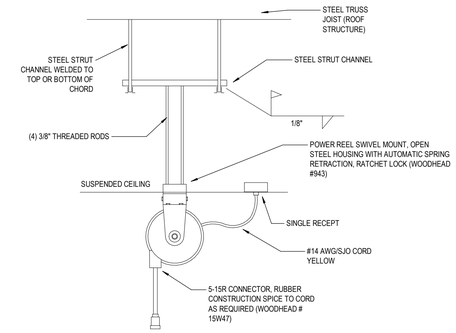

4 E6.1 CORD REEL MOUNTING DETAIL

NO SCALE

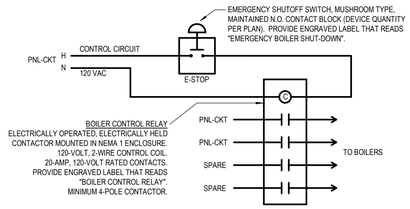

EMERGENCY BOILER SHUTOFF DETAIL GENERAL NOTES:

A. UNDER NORMAL OPERATING CONDITIONS THE 120-VOLT POWER TO THE BOILERS IS PROVIDED THROUGH THE NORMALLY CLOSED CONTACTS IN THE BOILER CONTROL RELAY.

B. UPON ACTIVATION OF THE EMERGENCY SHUTOFF SWITCH, 120-VOLT CONTROL POWER SHALL BE APPLIED TO THE BOILER CONTROL RELAY, OPENING CONTACTS AND DE-ENERGIZING 120-VOLT POWER TO THE BOILERS AND SHUTTING THEM DOWN.

UPON CLEARING THE EMERGENCY CONDITION, THE PUSHBUTTON IS IS PULLED OUT TO THE NORMAL OPERATING POSITION, REMOVING 120-VOLT POWER TO THE CONTROL RELAY AND

C. RETURNING CONTACTS TO THEIR NORMALLY CLOSED POSITION, ENERGIZING BOILERS.

5 E6.1 EMERGENCY BOILER SHUTOFF

NO SCALE

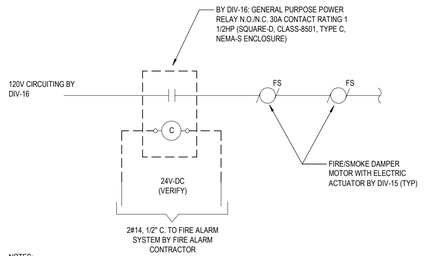

NOTES:

1. VERIFY AND COORDINATE WITH DIVISION-15, THE QUANTITIES, LOCATIONS AND ELECTRICAL CHARACTERISTICS OF ALL FIRE/SMOKE DAMPER MOTORS.

2. VERIFY AND COORDINATE WITH FIRE ALARM EQUIPMENT INSTALLER FOR INTERCONNECTION REQUIREMENTSFROM RELAY TO FIRE ALARM SYSTEM.

6 E6.1 TYP. FIRE/SMOKE DAMPER WIRING

NO SCALE

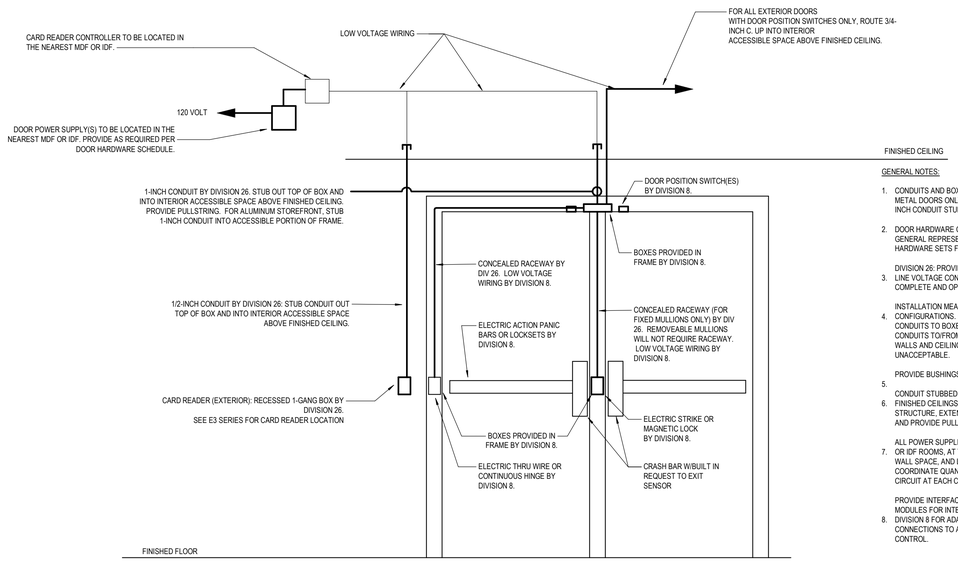

GENERAL NOTES:

1. CONDUITS AND BOXES INDICATED WITHIN FRAMES APPLY TO HOLLOW METAL DOORS ONLY. ALUMINUM STOREFRONTS WILL ONLY REQUIRE 1-INCH CONDUIT STUBBED INTO FRAME.

2. DOOR HARDWARE CONFIGURATIONS WILL VARY. ILLUSTRATION IS A GENERAL REPRESENTATION OF CONDITIONS. REFER TO DIVISION 8 DOOR HARDWARE SETS FOR INDIVIDUAL HARDWARE REQUIREMENTS.

3. DIVISION 26: PROVIDE ALL ROUGH-IN (BOTH LINE AND LOW VOLTAGE) AND LINE VOLTAGE CONNECTIONS AT ALL COMPONENT LOCATIONS FOR A COMPLETE AND OPERATIONAL SYSTEM.

4. INSTALLATION MEANS AND METHODS WILL VARY DEPENDING ON DOOR CONFIGURATIONS. CONCEAL ALL CARD READER ROUGH-IN BOXES, CONDUITS TO BOXES, CONDUITS TO DOOR HARDWARE AND FRAMES, AND CONDUITS TO/FROM POWER SUPPLIES (AND READER CONTROLLERS) IN WALLS AND CEILINGS. EXPOSED RACEWAY IN NEW CONSTRUCTION IS UNACCEPTABLE.

5. PROVIDE BUSHINGS ON ALL CONDUIT STUB-UPS.

6. CONDUIT STUBBED UP INTO INTERIOR ACCESSIBLE SPACES ABOVE FINISHED CEILINGS: IN LOCATIONS WITH HARD CEILINGS OR EXPOSED STRUCTURE, EXTEND CONDUIT TO SPACE ABOVE NEAREST LAY-IN CEILING AND PROVIDE PULLSTRING.

7. ALL POWER SUPPLIES AND DOOR CONTROLLERS TO BE INSTALLED IN MDF OR IDF ROOMS, AT THE MINIMUM MANUFACTURER'S CLEARANCE TO SAVE WALL SPACE, AND LABELED WITHTHE DOOR NUMBER THEY SERVE. COORDINATE QUANTITY WITH SYSTEM SUPPLIER. PROVIDE DEDICATED CIRCUIT AT EACH CENTRAL POWER SUPPLY.

8. PROVIDE INTERFACE TO ADA OPERATORS, INCLUDING RELAYS AND TIMER MODULES FOR INTERCONNECTION WITH CARD READER. COORDINATE WITH DIVISION 8 FOR ADA OPERATORS AND CONTROLS, DIVISION 26 FOR POWER CONNECTIONS TO ADA OPERATORS AND DIVISION 28 FOR ACCESS CONTROL.

3 E6.1 DOOR HARDWARE DETAIL

NO SCALE

C:\Revit\74-18109-00_ACMA_MEP_2018_Central_p_raghu.rvt
3/13/2019 4:33:29 PM

REGISTERED PROFESSIONAL ENGINEER
86828PE
OREGON
JULY 10, 2012
DANA STEPHENS
EXPIRES: 6/30/2020
3/13/19

BID/P

ELECTRICAL DETAILS
ACMA
BEAVERTON SCHOOL DISTRICT

E6.1
74-18109-00
03/14/2019
REVISIONS

DLR Group
Architecture Planning Interiors

©2019 DLR Group Architecture & Planning Inc., an Oregon corporation, ALL RIGHTS RESERVED

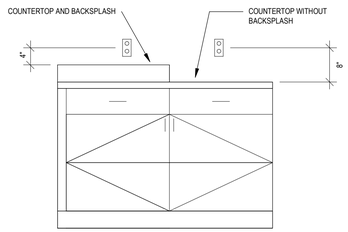

1 E6.2 ABOVE COUNTER RECEPTACLES
SCALE: 1'2" = 1'-0"

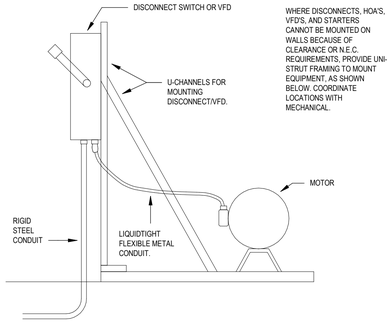

2 E6.2 DISCONNECT MOUNTING DETAIL
SCALE: 1/4" = 1'-0"

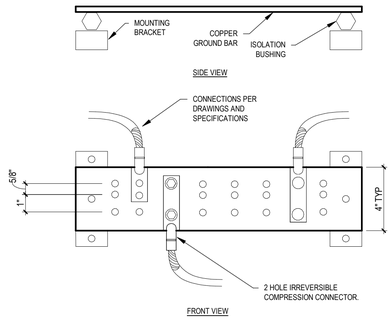

3 E6.2 GROUND BUS
SCALE: 3" = 1'-0"

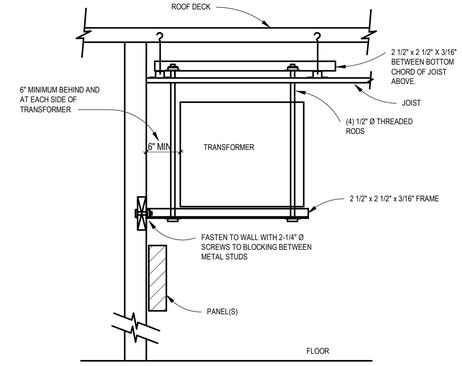

4 E6.2 TRANSFORMER WALL/TRAPEZE MOUNT
SCALE: 1/4" = 1'-0"

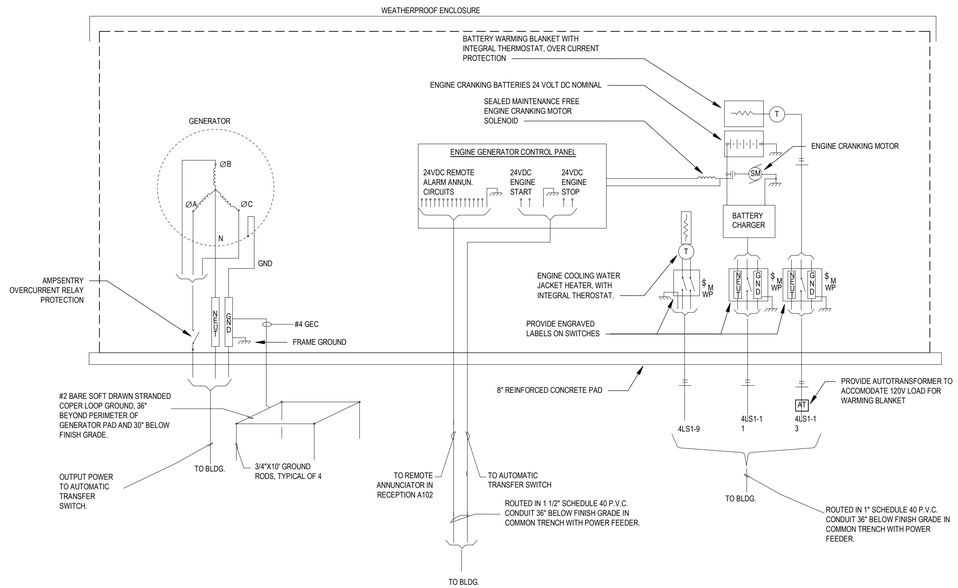

5 E6.2 EXTERIOR MOUNTED ENGINE GENERATOR (SEPARATELY DERIVED SYSTEM)
SCALE: 1/4" = 1'-0"

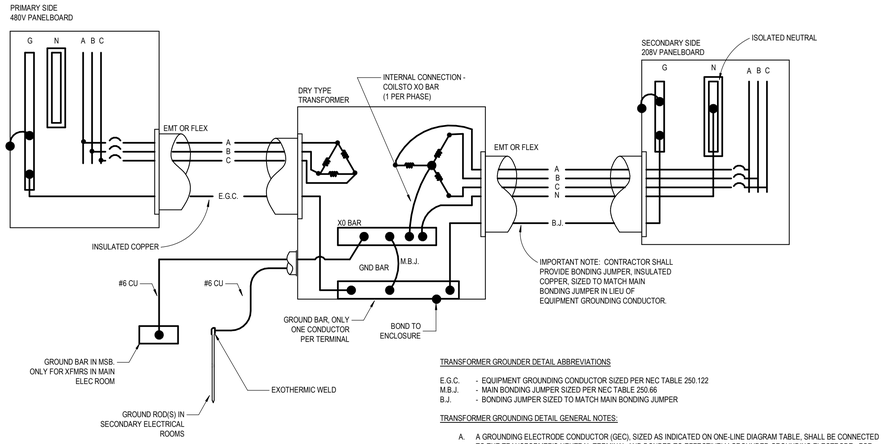

TRANSFORMER GROUNDER DETAIL ABBREVIATIONS

E.G.C. - EQUIPMENT GROUNDING CONDUCTOR SIZED PER NEC TABLE 250.122
M.B.J. - MAIN BONDING JUMPER SIZED PER NEC TABLE 250.66
B.J. - BONDING JUMPER SIZED TO MATCH MAIN BONDING JUMPER

TRANSFORMER GROUNDING DETAIL GENERAL NOTES:

A. A GROUNDING ELECTRODE CONDUCTOR (GEC), SIZED AS INDICATED ON ONE-LINE DIAGRAM TABLE. SHALL BE CONNECTED TO THE TRANSFORMER'S NEUTRAL TERMINAL AND BONDED TO EFFECTIVELY GROUNDED GROUNDING ELECTRODE. FOR CONNECTIONS TO GROUND ROD(S) LEAVE A FEW INCHES EXPOSED ABOVE THE CONCRETE PAD TO ALLOW EXAMINATION OF THE CONDUCTOR CONNECTION. BOND THE GROUNDING ELECTRODE SYSTEM DESCRIBED ABOVE TO THE TRANSFORMER ENCLOSURE AND THE PRIMARY FEEDER'S EQUIPMENT GROUNDING CONDUCTOR.

B. A MAIN BONDING JUMPER (MBJ) SHALL BE CONNECTED TO THE TRANSFORMER'S NEUTRAL TERMINAL (X0 TERMINAL) AND BONDED TO IT'S GROUND BAR AS SHOWN. THE SECONDARY FEEDER FROM THE TRANSFORMER TO THE SECONDARY OCPD SHALL NOT EXCEED 25'-0" IN TOTAL LENGTH.

6 E6.2 TYPICAL TRANSFORMER GROUNDING
SCALE: 12" = 1'-0"

PANEL L1A
120/208V, 3PH, 4W
FED FROM T1A
10KAIC, 1-20-2011

CABLE COLOR CODE:
PHASE A: BLACK
PHASE B: RED
PHASE C: BLUE
NEUTRAL: WHITE
GROUND: GREEN

SWITCHBOARD, DISTRIBUTION PANEL AND PANELBOARD EXAMPLE.

120/208V, 3PH, 4W
FED FROM T1A
FEEDS PANEL L1A

SAFETY SWITCH OR ENCLOSED CIRCUIT BREAKER EXAMPLE.

LABELING DETAIL NOTES:

1. LABEL SHALL BE BLACK OR WHITE LAMINATED ACRYLIC OR MELAMINE WITH ENGRAVED LETTERING AND SELF-ADHESIVE BACK.
2. LETTERING SHALL BE WHITE ON BLACK OR BLACK ON WHITE BACKGROUND AND 3/8-INCH HIGH MINIMUM.
3. PROVIDE THE FOLLOWING INFORMATION ON SWITCHBOARD LABELS:
   SWITCHBOARD TAG
   SYSTEM VOLTAGE, PHASE, WIRE
   SHORT CIRCUIT RATING, DATE
   CONDUCTOR COLORS
4. PROVIDE THE FOLLOWING INFORMATION ON DISTRIBUTION PANELBOARD AND PANELBOARD LABELS:
   DISTRIBUTION PANELBOARD OR PANELBOARD TAG
   SYSTEM VOLTAGE, PHASE, WIRE
   FED FROM
   SHORT CIRCUIT RATING, DATE
   CONDUCTOR COLORS
5. PROVIDE THE FOLLOWING INFORMATION ON SWITCHBOARD AND DISTRIBUTION PANELBOARD BRANCH SWITCHES:
   BRANCH SWITCH TAG (LOAD BEING SERVED)
6. PROVIDE THE FOLLOWING INFORMATION ON TRANSFORMER LABELS:
   TRANSFORMER TAG
   SYSTEM PRIMARY AND SECONDARY VOLTAGE, WYE, DELTA, OR SINGLE PHASE
   FED FROM
7. PROVIDE THE FOLLOWING INFORMATION ON SAFETY SWITCH OR CIRCUIT BREAKER ENCLOSURE LABELS:
   SYSTEM VOLTAGE, PHASE, WIRE
   FED FROM
   FEEDS (LOAD BEING SERVED)
8. CONDUCTOR COLORS SHALL ALSO FOLLOW REQUIREMENTS LISTED IN SPECIFICATIONS SECTION 260553.

7 E6.2 TYPICAL EQUIPMENT LABELING
SCALE: 12" = 1'-0"

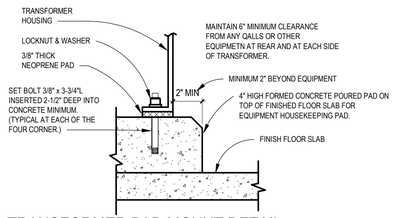

8 E6.2 TRANSFORMER PAD MOUNT DETAIL
SCALE: 1/4" = 1'-0"

BID/PERMIT SET

CONDITIONAL USE NUMBER: CU2018-0016
DESIGN REVIEW NUMBER: DR2018-0114
SITE DEVELOPMENT PERMIT NUMBER: TBD
BUILDING PERMIT NUMBER: TBD

REGISTERED PROFESSIONAL ENGINEER
86828PE
OREGON
JULY 10, 2012
CHAD STEPHENS
EXPIRES: 6/30/2020
03/13/19

ELECTRICAL DETAILS
ACMA
BEAVERTON SCHOOL DISTRICT

E6.2
74-18109-00
03/14/2019
REVISIONS

DLR Group
Architecture Engineering Planning Interiors

© 2019, DLR Group Architecture & Engineering Inc., an Oregon corporation, ALL RIGHTS RESERVED

C:\Revit\74-18109-00_ACMA_MEP_2018_Central_p_raghu.rvt
3/13/2019 4:33:33 PM

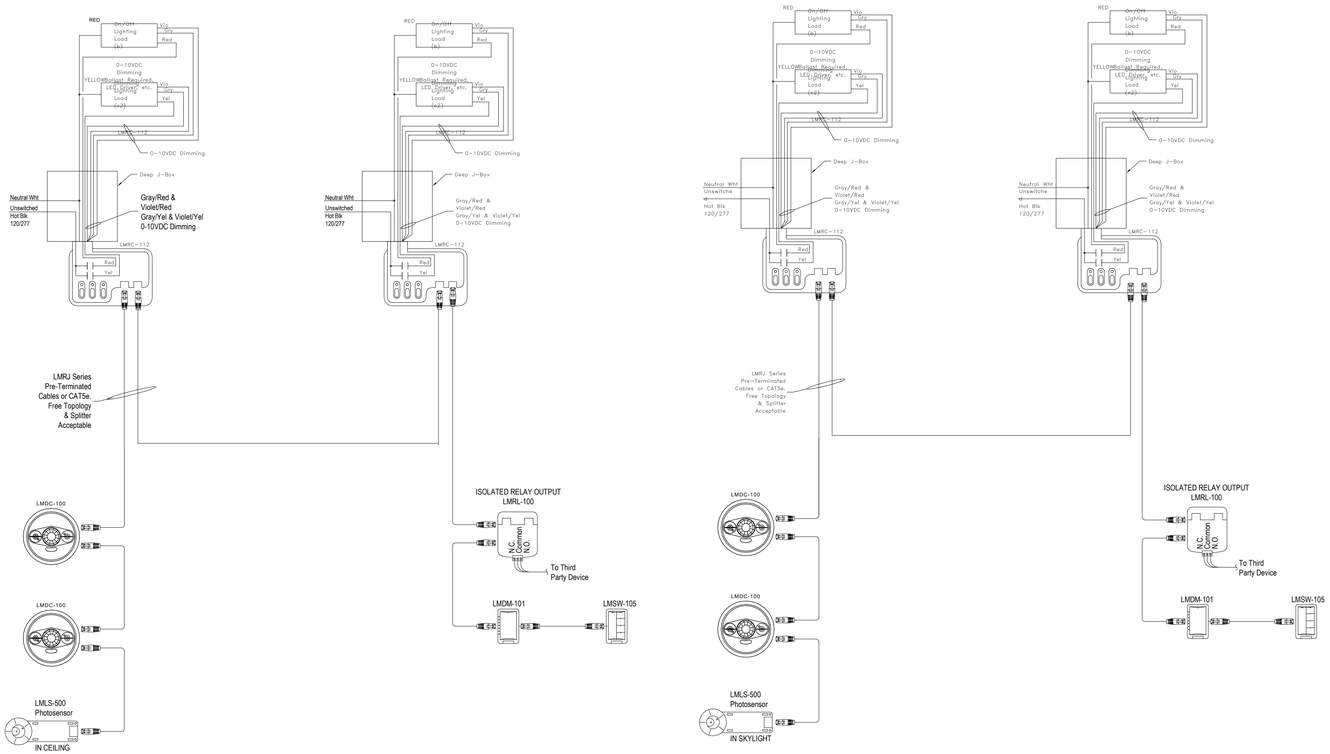

		a	b	c1	c2
SCENE 1	ALL ON	100%	100%	100%	100%
SCENE 2	ALL OFF	0%	0%	0%	0%
SCENE 3	TEACHER PRESENTATION	25%	25%	0%	0%
SCENE 4	WHITEBOARD	0%	0%	50%	50%
SCENE 5	DIMMING	DIM	DIM	DIM	DIM

SEQUENCE OF OPERATION:

PROGRAM OCCUPANCY SENSOR FOR VACANCY MODE (MANUAL ON, AUTO OFF), WITH 10 MINUTE TIMEOUT

PROGRAM DAYLIGHT SENSOR TO CONTROL ZONE a (FIXTURES IN "DAYLIGHT DIMMING ZONE" ON PLANS)

DIMMING SWITCH AT ENTRY PROGRAMMED TO CONTROL ALL LIGHTING FIXTURES

SCENE CONTROL SWITCH AT TEACHER'S STATION PROGRAMMED TO CONTROL THE LIGHTING FIXTURES NEAR THE BOARD AND ALL OTHER LIGHTING FIXTURES PER THE SCENE CONTROL MATRIX.

LEVEL 1 CLASSROOM LIGHTING CONTROL DIAGRAM
Basis of Design: All parts Wattstopper unless noted otherwise

		a	b	c1	c2
SCENE 1	ALL ON	100%	100%	100%	100%
SCENE 2	ALL OFF	0%	0%	0%	0%
SCENE 3	TEACHER PRESENTATION	25%	25%	0%	0%
SCENE 4	WHITEBOARD	0%	0%	50%	50%
SCENE 5	DIMMING	DIM	DIM	DIM	DIM

SEQUENCE OF OPERATION:

PROGRAM OCCUPANCY SENSOR FOR VACANCY MODE (MANUAL ON, AUTO OFF), WITH 10 MINUTE TIMEOUT

PROGRAM DAYLIGHT SENSOR TO CONTROL ZONES a AND c1 (FIXTURES IN "DAYLIGHT DIMMING ZONE" ON PLANS)

DIMMING SWITCH AT ENTRY PROGRAMMED TO CONTROL ALL LIGHTING FIXTURES

SCENE CONTROL SWITCH AT TEACHER'S STATION PROGRAMMED TO CONTROL THE LIGHTING FIXTURES NEAR THE BOARD AND ALL OTHER LIGHTING FIXTURES PER THE SCENE CONTROL MATRIX.

LEVEL 2 CLASSROOM LIGHTING CONTROL DIAGRAM
Basis of Design: All parts Wattstopper unless noted otherwise

1 E6.3 TYPICAL CLASSROOM LIGHTING CONTROL DIAGRAM
NO SCALE

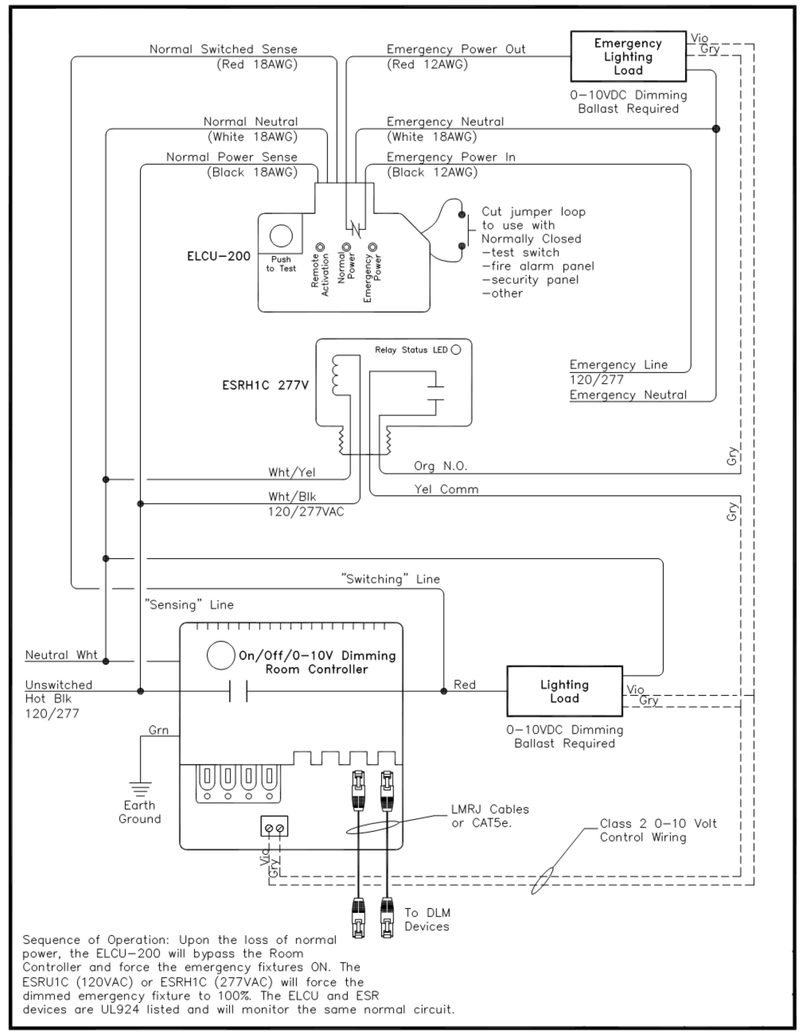

2 E6.3 ENHANCED ROOM CONTROLLER W/ EMERGENCY BYPASS
NO SCALE

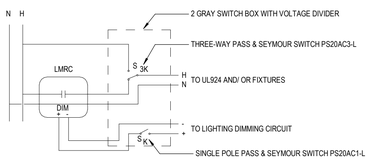

CORRIDORS KEYED SWITCH LIGHTING CONTROL DIAGRAM

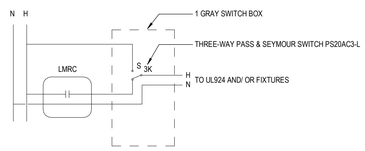

GIRLS/ BOYS RESTROOMS KEYED SWITCH LIGHTING CONTROL DIAGRAM

3 E6.3 TYPICAL CORRIDORS AND RESTROOMS LIGHTING CONTROL DIAGRAM
NO SCALE

BID/PERMIT SET

CONDITIONAL USE NUMBER: CU2018-0016
DESIGN REVIEW NUMBER: DR2018-0114
SITE DEVELOPMENT PERMIT NUMBER: TBD
BUILDING PERMIT NUMBER: TBD

REGISTERED PROFESSIONAL ENGINEER 86828PE OREGON JULY 10, 2012 CHINA STEPHENS
EXPIRES: 6/30/2020
03/13/19

ELECTRICAL DETAILS
ACMA
BEAVERTON SCHOOL DISTRICT

E6.3
74-18109-00
03/14/2019
REVISIONS

DLR Group
Architecture Engineering Planning Interiors

© 2019, DLR Group Architecture & Engineering Inc., an Oregon corporation, ALL RIGHTS RESERVED

C:\Revit\74-18109-00_ACMA_MEP_2018_Central_p_raghu.rvt
3/13/2019 4:33:36 PM

LEGEND NOTES

LEGEND NOTES ARE COMMON TO ALL
SOME NOTES MAY NOT APPLY TO THIS SHEET

LIGHT FIXTURE SCHEDULE - THEATRICAL

TYPE	MANUFACTURER	MODEL	LAMP	Electrical Data	Ballast(s)	Type Comments	Mounting	DESCRIPTION	Accessories
TH2	**ETC (NO SUBSTITUTIONS)**	**CSPAR-SELRW-7.5**	**RGBL LED**	**120 V/1-102 VA**		**PAR**		**COLORSOURCE LED PAR FIXTURE. WIDE ROUND OPTIC.**	**10' DMX CABLE, #DPJ-10' POWERCON TO POWERCON JUMPER, #407CT - COLOR FRAME, #400CC - C-CLAMP, #400SC - SAFETY CABLE**

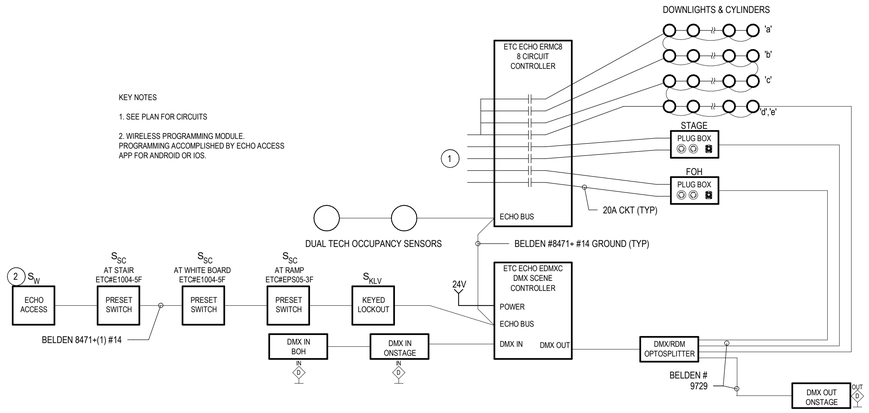

1 E6.4 THEATRICAL CONTROL ONE-LINE
NO SCALE

ZONE		a		b		c		d		e		PARs	
SCENE #	NAME/ ENGRAVE	%	COLOR	%	COLOR	%	COLOR	%	COLOR	%	COLOR	%	COLOR
1	CLASS	100	3500K	100	3500K	100	3500K	100	3500K	100	3500K	0	NA
2	AV MODE	0	NA	50	3500K	50	3500K	100	3500K	100	3500K	0	NA
3	ASSEMBLY	100	3500K	100	3500K	100	3500K	50	3500K	25	3500K	80	3500K
4	PERFORMANCE	100	3000K	100	3000K	100	3000K	25(2)	ROSCO #67(1)	25(2)	ROSCO #67(1)	80	3000K
5	OFF	0	NA	100	NA	0	NA	0	NA	0	NA	0	0

NOTES:
(1) GETTING THE EXACT COLOR WITH THE DOWNLIGHTS MAY BE TOUGH, BUT SHOOT FOR A CLOSE BLUE.
(2) THIS LIGHTING LEVEL IS A STARTING POINT. ADJUST LIGHTING TO PROVIDE AROUND 2 FOOTCANDLES OF BLUE LIGHT. CONFIRM WITH DISTRICT, DURING NON DAYLIGHT HOURS, THAT LIGHT IS ADEQUATE AND DOES NOT BLEED OVER CYCLORAMA CURTAIN. (THE FIXTURES ARE INDIVIDUALLY ADDRESSABLE.) VERIFY EXACT CYCLORAMA LOCATION. LIGHTS OVER THE TOP OF CYCLORAMA TRACK SHALL BE TURNED OFF IN THIS SCENE (FIXTURES WITH 'D2' TAG). LIGHTS WITHIN STAGE ARE (FIXTURES TAGGED 'e2') SHALL REMAIN WHITE AND ON AT 100%.

2 E6.4 THEATER WALLSTATION SCENES
NO SCALE

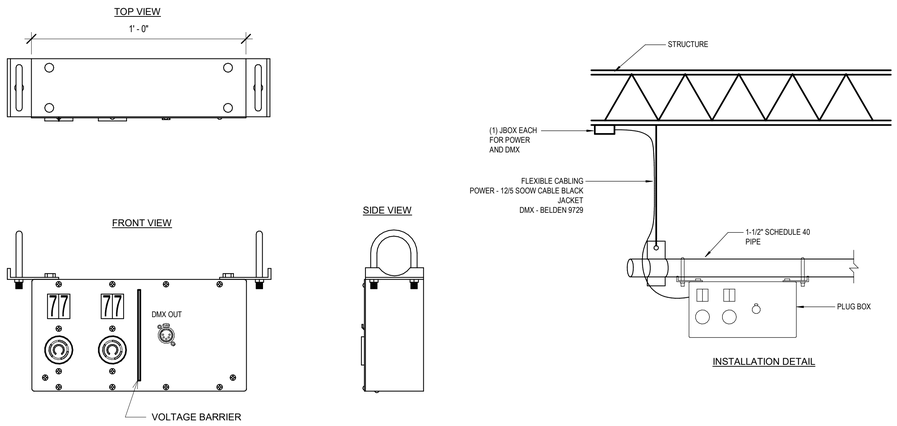

3 E6.4 PLUG BOX DETAIL
NO SCALE

BID/PERMIT SET

CONDITIONAL USE NUMBER: CU2018-0016
DESIGN REVIEW NUMBER: DR2018-0114
SITE DEVELOPMENT PERMIT NUMBER: TBD
BUILDING PERMIT NUMBER: TBD

REGISTERED PROFESSIONAL ENGINEER
86828PE
OREGON
JULY 10, 2012
CHANA STEPHENS
03/13/19
EXPIRES: 6/30/2020

ELECTRICAL DETAILS
ACMA
BEAVERTON SCHOOL DISTRICT

E6.4
74-18109-00
03/14/2019
REVISIONS

DLR Group
Architecture Engineering Planning Interiors

© 2019, DLR Group Architecture & Engineering Inc., an Oregon corporation, ALL RIGHTS RESERVED

C:\Revit\74-18109-00_ACMA_MEP_2018_Central_p_raghu.rvt
3/13/2019 4:33:41 PM

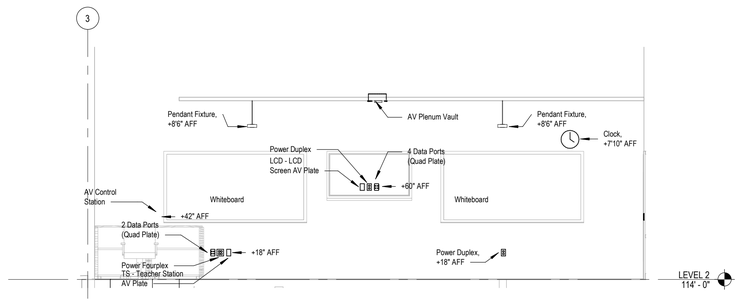

1 E6.5 TYPICAL TEACHING WALL ELEVATION - LCD

SCALE: 1/4" = 1'-0"

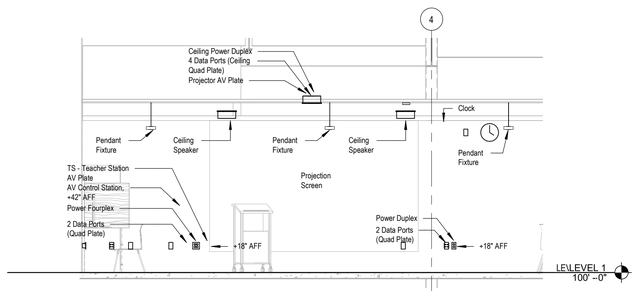

4 E6.5 TYPICAL TEACHING WALL ELEVATION - CEILING MOUNT PROJECTOR

SCALE: 1/4" = 1'-0"

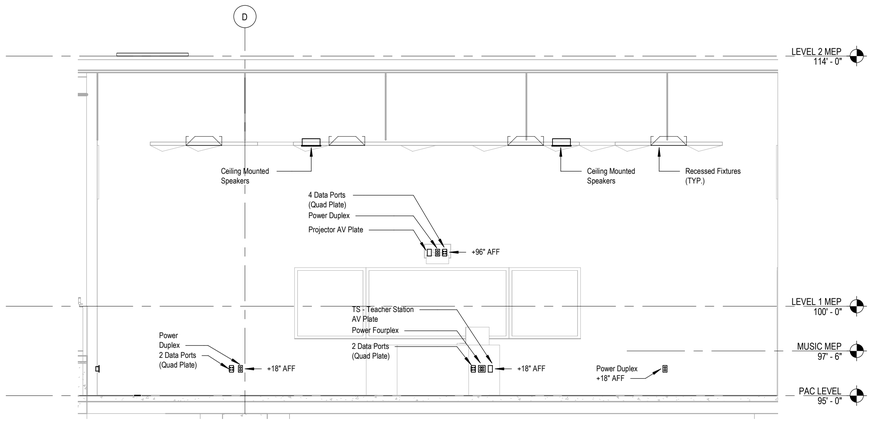

2 E6.5 TYPICAL TEACHING WALL ELEVATION - ENSEMBLE ROOMS

SCALE: 1/4" = 1'-0"

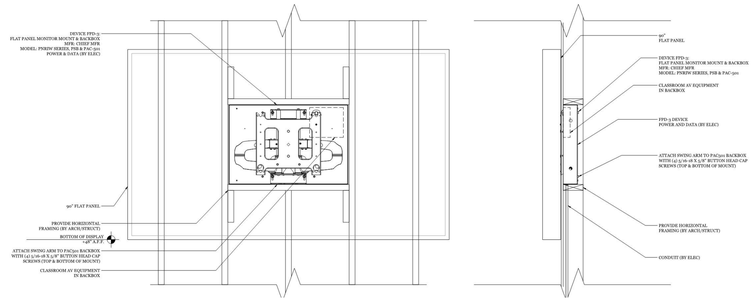

5 E6.5 TV MOUNT DETAIL

SCALE: 1" = 1'-0"

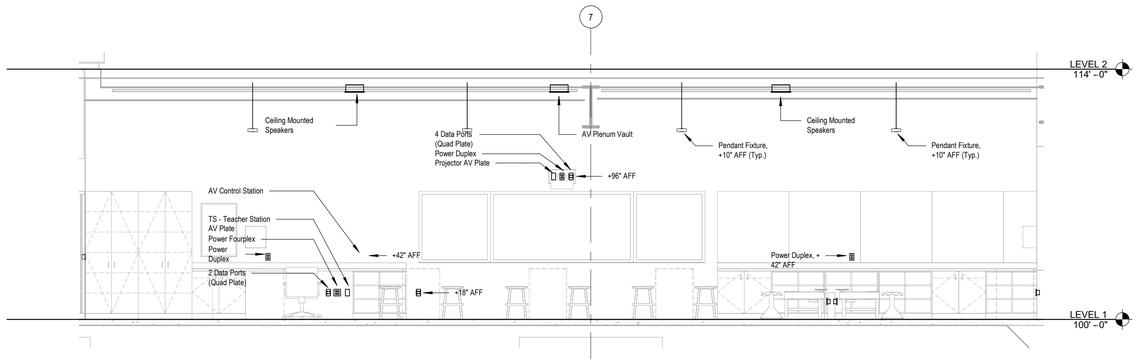

3 E6.5 TYPICAL TEACHING WALL ELEVATION - 2D AND 3D ART ROOMS

SCALE: 1/4" = 1'-0"

LEGEND NOTES

LEGEND NOTES ARE COMMON TO ALL
SOME NOTES MAY NOT APPLY TO THIS SHEET

BID/PERMIT SET

CONDITIONAL USE NUMBER: CU2018-0016
DESIGN REVIEW NUMBER: DR2018-0114
SITE DEVELOPMENT PERMIT NUMBER: TBD
BUILDING PERMIT NUMBER: TBD

REGISTERED PROFESSIONAL ENGINEER 86828PE OREGON JULY 10, 2012 CHINA STEPHENS
EXPIRES: 6/30/2020
03/13/19

ELECTRICAL DETAILS
ACMA
BEAVERTON SCHOOL DISTRICT

E6.5
74-18109-00
03/14/2019
REVISIONS

DLR Group
Architecture Engineering Planning Interiors

© 2019, DLR Group Architecture & Engineering Inc., an Oregon corporation, ALL RIGHTS RESERVED

C:\Revit\74-18109-00_ACMA_MEP_2018_Central_p_raghu.rvt
3/13/2019 4:33:46 PM

LIGHT FIXTURE SCHEDULE - INTERIOR

TYPE	MANUFACTURER	MODEL	LAMP	Electrical Data	Ballast(s)	Type Comments	Mounting	DESCRIPTION
DL1	PHILIPS LIGHTOLIER	P4R-D10-N-Z10-U-VB, P4R-D-835-VB, P4R-D-CC	3500K LED	277 V/1-11 VA	0-10V DIMMING DRIVER	4" DOWNLIGHT	RECESSED	RECESSED 4" DOWNLIGHT. 1000 NOMINAL LUMENS. 60 DEGREE CUTOFF. COMFORT CLEAR REFLECTOR WITH WHITE FLANGE. UL DAMP RATED
DL2	PHILIPS LIGHTOLIER	C4-R-N, C4L-10-8-35-M-Z10-U, C4RDL-CC-F, CA4RFT	3500K LED	277 V/1-11 VA	0-10V DIMMING DRIVER	4" DOWNLIGHT	RECESSED	RECESSED 4" TRIMLESS DOWNLIGHT. 1000 NOMINAL LUMENS. 60 DEGREE CUTOFF. COMFORT CLEAR REFLECTOR.
ESL1	PHILIPS GARDCO	ECF-S-32L-1A-NW-G2-AR-5W-UNV	4000K LED	277 V/1-106 VA	0-10V DIMMING DRIVER	EXTERIOR SINGLE HEAD SITE	STANDARD ARM - SINGLE HEAD	SINGLE HEAD PARKING POLE LIGHT FIXTURE WITH TYPE 5 WIDE DISTRIBUTION ON 20' POLE. 13030 NOMINAL LUMENS.
ESL1-2	PHILIPS GARDCO	ECF-S-32L-1A-NW-G2-AR-5W-UNV	4000K LED	277 V/1-212 VA	0-10V DIMMING DRIVER	EXTERIOR DOUBLE HEAD	STANDARD ARM - DOUBLE HEAD	SIMILAR TO TYPE ESL1 EXCEPT (2) FIXTURES MOUNTED 90 DEGREES FROM EACH OTHER ON A 20' SINGLE POLE.
ESL2	PHILIPS GARDCO	ECF-S-32L-1A-NW-G2-AR-2-UNV	4000K LED	277 V/1-106 VA	0-10V DIMMING DRIVER	EXTERIOR SINGLE HEAD SITE	STANDARD ARM - SINGLE HEAD	SINGLE HEAD PARKING POLE LIGHT FIXTURE WITH TYPE 2 DISTRIBUTION ON 20' POLE. 12464 NOMINAL LUMENS.
ESL3	PHILIPS	111L-16L-350-NW-G2-3-UNV-DD-F1-BZ	4000K LED	277 V/1-18 VA	0-10V DIMMING DRIVER	EXTERIOR WALL PACK	WALL 11'-0" AFF	EXTERIOR 12" X 6" X 7" WALL SCONCE. +10'6" AFF UNLESS OTHERWISE NOTED. 1908 NOMINAL LUMENS. UL LISTED FOR WET LOCATIONS. BRONZE FINISH.
ESL4	LITON	AG251-7-B-UE-DUN-B45-T30	3000K LED	277 V/1-20 VA	0-10V DIMMING DRIVER	FLOOD LIGHT	FLOOD LIGHT	LED LANDSCAPE BULLET. 45 DEGREE FLOOD. 1000 LUMENS, UNIVERSAL 120-277V. ALUMINUM HOUSING. GROUND SPIKE MOUNT.
PL1-4	PRECISION ARCHITECTURAL LIGHTING	MLS3-I/D-MO/MO-K35/K35-80-4-CN-WSOP-LOH-F01M-UNV-DIM10	3500K LED	277 V/1-35 VA	0-10V DIMMING DRIVER	4' DIRECT INDIRECT PENDANT	SUSPENDED	4' DIRECT INDIRECT PENDANT FIXTURE. 54% UP/ 43% DOWN. 4283 TOTAL LUMENS WITH WIDE SPREAD OPTIC. WIDE SPREAD DISTRIBUTION WITH OPEN TOP. MATTE WHITE FINISH
PL2	IMPACT LIGHTING	P5117-35HI-35HI-AN-SBPC	3500K LED	277 V/1-75 VA	0-10V DIMMING DRIVER	PENDANT FIXTURE	SUSPENDED	IMPACT LIGHTING TIKI LED PENDANT DIRECT/INDIRECT
PL3	VIBIA	RHYTHM 2122-14	2700K LED	277 V/1-131 VA	0-10V DIMMING DRIVER	PENDANT FIXTURE	SUSPENDED	PENDANT LED W/ STICK-LIKE MODULES W/ FROSTED LENS. EACH MODULE CAPABLE OF ROTATING ON ITS AXIS AND FIXED IN PLACE IN "SMOOTH" WAVELIKE INSTALLATION. MATTE OFF-WHITE LACQUER FINISH. 2700K LED, 20760 LUMENS, 119 LM/WATT, 0-10V DIMMING, 120-277V
PL4	VIBIA	RHYTHM 2152-58	2700K LED	277 V/1-174 VA	0-10V DIMMING DRIVER	PENDANT FIXTURE	SUSPENDED	PENDANT LED W/ STICK-LIKE MODULES W/ FROSTED LENS. EACH MODULE CAPABLE OF ROTATING ON ITS AXIS AND FIXED IN PLACE IN "SMOOTH" WAVELIKE INSTALLATION. MATTE OFF-WHITE LACQUER FINISH. 2700K LED, 20760 LUMENS, 119 LM/WATT, 0-10V DIMMING, 120-277V
RL1A	ALW	CB2X2-TGRID-MED-3500K-0/10V/S-WH-UNV	3500K LED	277 V/1-26 VA	0-10V DIMMING DRIVER	2X2 RECESSED	RECESSED	2X2 LED RECESSED FIXTURE, T-GRID CEILING TYPE, 2927 LUMENS, 0-10V DIMMING,WHITE POWDERCOAT FINISH
RL1B	ALW	CB2X2-TGRID-HI-3500K-0/10V/S-WH-UNV	3500K LED	277 V/1-33 VA	0-10V DIMMING DRIVER	2X2 RECESSED	RECESSED	2X2 LED RECESSED FIXTURE, T-GRID CEILING TYPE, 3660 LUMENS, 0-10V DIMMING,WHITE POWDERCOAT FINISH
RL2	COLUMBIA	LJT-24-35-HL-G-FA-A12125F-E-U-G2	3500K LED	277 V/1-61 VA	0-10V DIMMING DRIVER	2X4 RECESSED	RECESSED	2X4 KITCHEN TROFFER. 5500 NOMINAL LUMEN LED. 3500K. 0.125 INCH PATTERN 12 FROSTED ACRYLIC LENS. FACTORY TO PLACE SMOOTH SURFACE OUTSIDE FIXTURE. GASKETED AT DOOR TO HOUSING AND LENS TO DOOR. GASKETED FOR KITCHEN USE.
RL3	FINELITE	HP4R-4-H-835-277-X-X	3500K LED	277 V/1-28 VA	0-10V DIMMING DRIVER	4" APERTURE RECESSED LINEAR	RECESSED	4" SLOT LINEAR RECESSED FIXTURE. 4' LENGTH. 2989 NOMINAL LUMENS.
RL5A	FINELITE	HP2R-4-H-835-F-277V	3500K LED	277 V/1-28 VA	0-10V DIMMING DRIVER	2" APERTURE RECESSED LINEAR	RECESSED	2" APERTURE RECESSED LED LUMINAIRE. 4' LENGTH. 2557 NOMINAL LUMENS.
RL5B	FINELITE	HP2R-4-S-835-F-277V	3500K LED	277 V/1-14 VA	0-10V DIMMING DRIVER	2" APERTURE RECESSED LINEAR	RECESSED	2" APERTURE RECESSED LED LUMINAIRE. 4' LENGTH. 1525 NOMINAL LUMENS.
RL6-2	METALUMEN	RM4DOD-1L35K-17-M-W-L2-1-R-4	3500K LED	277 V/1-0 VA	0-10V DIMMING DRIVER	2' EXTERIOR RECESSED LINEAR	RECESSED	EXTERIOR UL LISTED FOR WET LOCATION, RECESSED FLANGED 4" SLOT FIXTURE WITH DOWNLIGHT OPTIC, 2' LENGTH, 2004 NOMINAL LUMEN PER 4' LENGTH. SATIN ALUMINUM FINISH.
RL6-14	METALUMEN	RM4DOD-1L35K-14-M-W-L2-1-R-4	3500K LED	277 V/1-61 VA	0-10V DIMMING DRIVER	14' EXTERIOR RECESSED LINEAR	RECESSED	EXTERIOR UL LISTED FOR WET LOCATION, RECESSED FLANGED 4" SLOT FIXTURE WITH DOWNLIGHT OPTIC, 14' LENGTH, 2004 NOMINAL LUMEN PER 4' LENGTH. SATIN ALUMINUM FINISH.
RL6-17	METALUMEN	RM4DOD-1L35K-17-M-W-L2-1-R-4	3500K LED	277 V/1-74 VA	0-10V DIMMING DRIVER	17' EXTERIOR RECESSED LINEAR	RECESSED	EXTERIOR UL LISTED FOR WET LOCATION, RECESSED FLANGED 4" SLOT FIXTURE WITH DOWNLIGHT OPTIC, 17' LENGTH, 2004 NOMINAL LUMEN PER 4' LENGTH. SATIN ALUMINUM FINISH.
RL6-20	METALUMEN	RM4DOD-1L35K-20-M-W-L2-1-R-4	3500K LED	277 V/1-87 VA	0-10V DIMMING DRIVER	20' EXTERIOR RECESSED LINEAR	RECESSED	EXTERIOR UL LISTED FOR WET LOCATION, RECESSED FLANGED 4" SLOT FIXTURE WITH DOWNLIGHT OPTIC, 20' LENGTH, 2004 NOMINAL LUMEN PER 4' LENGTH. SATIN ALUMINUM FINISH.
RL6-23	METALUMEN	RM4DOD-1L35K-23-M-W-L2-1-R-4	3500K LED	277 V/1-100 VA	0-10V DIMMING DRIVER	23' EXTERIOR RECESSED LINEAR	RECESSED	EXTERIOR UL LISTED FOR WET LOCATION, RECESSED FLANGED 4" SLOT FIXTURE WITH DOWNLIGHT OPTIC, 23' LENGTH, 2004 NOMINAL LUMEN PER 4' LENGTH. SATIN ALUMINUM FINISH.
RL7	PINNACLE	EX1-WHE-N-835-4'-S-U-OL1-M-0-W	3500K LED	277 V/1-18 VA	0-10V DIMMING DRIVER	1" APERTURE ASYMMETRIC THROW SURFACE LED LUMINAIRE. 4' LENGTH. 1428 NOMINAL LUMENS.		
RL8	PHILIPS COLOR KINETICS	432-000002-16 ; ACCESSORY : Graze Powercore Inground Enclosure	3500K LED	277 V/1-74 VA	0-10V DIMMING DRIVER	2" APERTURE RECESSED LINEAR	RECESSED	2" APERTURE IN-GROUND RGBW LED GRAZER, 10 DEGREE X 60 DEGREE. 4' LENGTH. 2172 NOMINAL LUMENS. ORDER WITH GRAZE POWERCORE INGROUND ENCLOSURE.
RLX	ALW	CB2X2-TGRID-MED-RED-0/10V/S-WH-UNV	3500K LED	277 V/1-26 VA	0-10V DIMMING DRIVER	2X2 RECESSED	RECESSED	2X2 RED LED ONLY (MOD) RECESSED FIXTURE, T-GRID CEILING TYPE, 2900 LUMENS, 0-10V DIMMING,WHITE POWDERCOAT FINISH
S1	FINELITE	HP2-SM-V-835--F-277-C4-FE-SC	3500K LED	277 V/1-37 VA	0-10V DIMMING DRIVER	4' LINEAR SURFACE MOUNT	SURFACE MOUNT	2" APERTURE DIRECT LED SURFACE MOUNT LUMINAIRE. 3215 NOMINAL LUMENS.
S2	EATON CROUSE-HINDS	EV LED - C701	3500K LED	277 V/1-30 VA	INTEGRAL DRIVER	EXPLOSION PROOF FIXTURE	SURFACE MOUNT	EXPLOSIONPROOF LED SURFACE JELLY JAR STYLE FIXTURE, UNV VOLTAGE, 30 WATTS, 3000K
SL1A	PHILIPS	FSS-4-40L-835-UNV-DIM	3500K LED	277 V/1-31 VA	0-10V DIMMING DRIVER	4' STRIP	SUSPENDED	CHAIN HUNG 4' STRIP LIGHT FIXTURE. 3900 NOMINAL LUMENS. 100% FROSTED REFLECTOR. CHAIN HANGING KIT WITH V HOOK.
SL1B	PHILIPS	FSS-4-55L-835-UNV-DIM	3500K LED	277 V/1-45 VA	0-10V DIMMING DRIVER	4' STRIP	SUSPENDED	CHAIN HUNG 4' STRIP LIGHT FIXTURE. 5500 NOMINAL LUMENS. 100% FROSTED REFLECTOR. CHAIN HANGING KIT WITH V HOOK.
SL2	PHILIPS LIGHTOLIER	C4-R-N/C4L-2S-8-35-W-Z10-U/C4-R-DL-BK	3500K LED	277 V/1-15 VA	0-10V DIMMING DRIVER	4" SUSPENDED DOWNLIGHT	SUSPENDED	CABLE PENDANT MOUNTED 4" DOWNLIGHT LUMINAIRE. 2500 NOMINAL LUMENS. BLACK FINISH
SL3	FINELITE	HP2-ID-4-S-H-835-TG-F-277V-FA-FE	3500K LED	277 V/1-43 VA	0-10V DIMMING DRIVER	SUSPENDED DIRECT/INDIRECT	SUSPENDED	2" APERTURE DIRECT INDIRECT LED LUMINAIRE. 39% UPLIGHT/61% DOWNLIGHT DISTRIBUTION. 4030 NOMINAL LUMENS.
SL3-TW	FINELITE	HP2-ID-4-B-H-8TW-TG-F-277V-FA-FE	2700K-6500K	277 V/1-43 VA	0-10V DIMMING DRIVER	SUSPENDED DIRECT/INDIRECT	SUSPENDED	TUNABLE WHITE 2" APERTURE DIRECT INDIRECT LED LUMINAIRE. 39% UPLIGHT/61% DOWNLIGHT DISTRIBUTION. 4030 NOMINAL LUMENS.
SL4	A-LIGHT	APX3-4'-LH-35-U-55-S-W-B-D-OP	3500K LED	277 V/1-56 VA	0-10V DIMMING DRIVER	SUSPENDED DIRECT	SUSPENDED	2" APERTURE DIRECT LUMINAIRE WITH DISCRETE CELL-LENS LED. 4068 NOMINAL LUMENS.
SL5	PINNACLE	EX3-WW-N-835HO-16'-AC48ST-U-OL1-1-0-W	3500K LED	277 V/1-165 VA	0-10V DIMMING DRIVER	SUSPENDED DIRECT	SUSPENDED	3 1/2" APERTURE DIRECT WALLWASH LUMINAIRE. 10.3 WATTS/FT, 52 LUMENS/WATT
TL1-8	XAL LIGHTING	MOV1-7-1-S-8-6-1-2-7-0/5M7-01-02-7-1	3500K LED	277 V/1-44 VA	0-10V DIMMING DRIVER	8' LINEAR SUSPENDED TRACK SYSTEM	SUSPENDED	8' TRACK SYSTEM WITH 4 HEADS. ALTERNATE HEADS TO BE AIMED AT 30 DEGREES TO ILLUMINATE WALL.
TL1-12	XAL LIGHTING	MOV1-1-S-12-6-1-2-7-0/5M7-01-02-7-1	3500K LED	277 V/1-132 VA	0-10V DIMMING DRIVER	12' LINEAR SUSPENDED TRACK SYSTEM	SUSPENDED	SAME AS TL1-8 BUT WITH 12 HEADS.
TL2-8	XAL LIGHTING	MOV1-1-S-8-6-1-2-7-0/5M7-01-02-7-1	3500K LED	277 V/1-44 VA	0-10V DIMMING DRIVER	8' LINEAR SUSPENDED TRACK SYSTEM	SUSPENDED	SAME AS TL1-8 BUT ALL 4 HEADS TO BE AIMED TO ILLUMINATE FLOOR
TL2-12	XAL LIGHTING	MOV1-1-S-12-6-1-2-7-0/5M7-01-02-7-1	3500K LED	277 V/1-132 VA	0-10V DIMMING DRIVER	12' LINEAR SUSPENDED TRACK SYSTEM	SUSPENDED	SAME AS TL2-8 BUT WITH 12 HEADS.
UC1	LUMINII OR EQUAL	LL18-35K-F-M-15'	3500K LED	277 V/1-23 VA	EXTERNAL POWER SUPPLY	LINEAR STRIP	SURFACE	TAPELIGHT MOUNTED ON 15 FT KSC WHITE CHANNEL WITH CLEAR 36 DEG BEAM ANGLE LIGHT DISTRIBUTION. UL LISTED.
WL1	PRUDENTIAL LIGHTING	S1-LED35-LO-4-SAL-TMW-UNV-SUR-ND	3500K LED	277 V/1-17 VA	0-10V DIMMING DRIVER	4' WALL MOUNT	WALL	4' WALL MOUNTED WRAPAROUND STRIP LIGHT FIXTURE. +7'0" AFF UNLESS OTHERWISE NOTED. 1920 NOMINAL LUMENS. SATIN ACRYLIC LENS AND TEXTURED WHITE FINISH.
WL1-2	PRUDENTIAL LIGHTING	S1-LED35-LO-2-SAL-TMW-UNV-SUR-ND	3500K LED	277 V/1-32 VA	0-10V DIMMING DRIVER	2' WALL MOUNT	SUSPENDED	2' WALL MOUNTED WRAPAROUND STRIP LIGHT FIXTURE. 1920 NOMINAL LUMENS. SATIN ACRYLIC LENS AND TEXTURED WHITE FINISH.
WL2	RT TECHNOLOGIES	LEDS-RIU-2W	4000K LED	277 V/1-4 VA	0-10V DIMMING DRIVER	WALL MOUNT	WALL 10'-0" AFF	LED ROOM IN USE SIGN.
WL3	LITON	LULEDB48	3500K LED	277 V/1-18 VA	0-10V DIMMING DRIVER	4' WALL MOUNT	WALL	4' TAPE LIGHT FIXTURE. 270 LUMENS/FT.
WL3-3	LITON	LULEDB48	3500K LED	277 V/1-18 VA	0-10V DIMMING DRIVER	4' WALL MOUNT	WALL	4' TAPE LIGHT FIXTURE. 270 LUMENS/FT.
WL4	LITHONIA	DMW2-L24-3000LM-PCL-MVOLT-35K-80CRI	3500K LED	277 V/1-27 VA	0-10V DIMMING DRIVER	NEMA 4X GASKETED FIXTURE	SURFACE MOUNT	SURFACE MOUNTED NEMA 4X NON METALLIC ENCLOSED AND GASKETED, WET LOCATION.
X1			LED	277 V/1-0 VA				WHITE EXIT SIGN, RED LETTERING, WALL MOUNT AT 8'0"AFF UNLESS OTHERWISE NOTED.
X2A				277 V/1-10 VA				CEILING MOUNT EXIT SIGN
X2B				277 V/1-10 VA				CEILING MOUNT DOUBLE SIDED EXIT SIGN
X3	CHLORIDE	VEGW-VEPMC	LED	277 V/1-5 VA	AC ONLY	EXIT SIGN	PENDANT	WHITE PENDANT MOUNTED THERMOPLASTIC EXIT SIGN WITH GREEN LETTERS. RECONFIGURABLE CHEVRONS. SINGLE OR DOUBLE FACE. UL LISTED DAMP LOCATION.
X4	PHIILPS CHLORIDE	TPU-D-N-LM7-W-IC-ACP	LED	277 V/1-14 VA		EXIT SIGN		WHITE EGRESS LIGHT UNIT, (2) 516 LUMEN LAMPS, 8'0" MOUNTING HEIGHT UNLESS OTHERWISE NOTED.

BID/PERMIT SET

CONDITIONAL USE NUMBER: CU2018-0016
DESIGN REVIEW NUMBER: DR2018-0114
SITE DEVELOPMENT PERMIT NUMBER: TBD
BUILDING PERMIT NUMBER: TBD

REGISTERED PROFESSIONAL ENGINEER
86828PE
OREGON
JULY 10, 2012
DANA STEPHENS
03/13/19
EXPIRES: 6/30/2020

ELECTRICAL SCHEDULES
ACMA
BEAVERTON SCHOOL DISTRICT

E7.1
74-18109-00
03/14/2019
REVISIONS

DLR Group
Architecture Engineering Planning Interiors

©2019, DLR Group Architecture & Engineering Inc., an Oregon corporation, ALL RIGHTS RESERVED

C:\Revit\74-18109-00_ACMA_MEP_2018_Central_p_raghu.rvt
3/13/2019 4:33:50 PM

ELEC - MECH & PLUMBING EQUIP CONNECTION SCHEDULE

EQUIPMENT SERVED	DESCRIPTION	HP	DISC SWITCH SIZE	Electrical Data	FLA	MCA	MOCP	Panel	Circuit Number	FEEDER	SCHED NOTE
AC-1	AIR COMPRESSOR	7.5	TS	480 V/3-9144 VA	11	13.75	20	4B3	37,39,41	3#12, 1#12G, 3/4"C	1
AD-1	AIR DRYER	0.45 KW	TS	120 V/1-450 VA	3.9	4.9	15			2#12, 1#12G, 3/4"C	1
BLR-1	BOILER	-	30A	208 V/3-4719 VA	13.1	16.4	20	2B2	17,19,21	3#12, 1#12G, 3/4"C	2
BLR-2	BOILER	-	30A	208 V/3-4719 VA	13.1	16.4	20	2B2	23,25,27	3#12, 1#12G, 3/4"C	2
CUH-100	CABINET UNIT HEATER	-	TS	120 V/1-252 VA	2.1	2.6	15	2B1	23	2#12, 1#12G, 3/4"C	2
CUH-130	CABINET UNIT HEATER	-	TS	120 V/1-204 VA	1.7	2.1	15	2B2	33	2#12, 1#12G, 3/4"C	2
CF-1	CEILING FAN	-	TS	208 V/2-2080 VA	10	12.5	15	2B3	1,3	2#12, 1#12G, 3/4"C	1
CF-2	CEILING FAN	-	TS	208 V/2-2080 VA	10	12.5	15	2B3	5,7	2#12, 1#12G, 3/4"C	1
EUH-101	ELECTRIC UNIT HEATER	-	TS	208 V/3-4998 VA	14	17.5	20	2B1	17,19,21	3#12, 1#12G, 3/4"C	2
EUH-140	ELECTRIC UNIT HEATER	-	TS	208 V/2-3000 VA	14	17.5	20	2B1	27,29	2#12, 1#12G, 3/4"C	2
EF-00RR	EXHAUST FAN	1/4	TS	120 V/1-696 VA	5.8	7.25	15	2B2	35	2#12, 1#12G, 3/4"C	1
EF-00WC	EXHAUST FAN	1/6	TS	120 V/1-528 VA	4.4	5.5	15	2B2	24	2#12, 1#12G, 3/4"C	1
EF-01RR	EXHAUST FAN	1/2	TS	120 V/1-1176 VA	9.8	12.25	20	2B3	19	2#12, 1#12G, 3/4"C	1
EF-100	EXHAUST FAN	1/8	TS	120 V/1-480 VA	4.0	5	15	2B2	26	2#12, 1#12G, 3/4"C	1
EF-133A	EXHAUST FAN	1-1/2	TS	120 V/1-2400 VA	20	25	40	2B1	13	2#10, 1#10G, 3/4"C	1
EF-133B	EXHAUST FAN	1/2	TS	120 V/1-1176 VA	9.8	12.25	20	2B1	25	2#12, 1#12G, 3/4"C	1
EF-145	EXHAUST FAN	3/4	TS	120 V/1-1656 VA	13.8	17.25	25	2B3	15	2#12, 1#12G, 3/4"C	1
EF-147	EXHAUST FAN	3/4	TS	120 V/1-1656 VA	13.8	17.25	25	2B3	17	2#10, 1#10G, 3/4"C	1
EF-147A	EXHAUST FAN	1/4	TS	120 V/1-696 VA	5.8	7.25	15	2B3	19	2#12, 1#12G, 3/4"C	1
EF-149A	EXHAUST FAN	1/3	TS	120 V/1-864 VA	7.2	9	15	2B3	13	2#12, 1#12G, 3/4"C	1
EF-203	EXHAUST FAN	1/8	TS	120 V/1-480 VA	4.0	5	15	2B2	28	2#12, 1#12G, 3/4"C	1
EF-E101	EXHAUST FAN	1/4	TS	120 V/1-696 VA	5.8	7.25	15	2B1	15	2#12, 1#12G, 3/4"C	1
EF-E101A	EXHAUST FAN	1/8	TS	120 V/1-480 VA	4.0	5	15	2B1	6	2#12, 1#12G, 3/4"C	1
EF-E200	EXHAUST FAN	1/8	TS	120 V/1-480 VA	4.0	5	15	2B2	8	2#12, 1#12G, 3/4"C	1
EF-KILN-1A	EXHAUST FAN	1/3	TS	120 V/1-75 VA	7.2	9	15	2B1	2	2#12, 1#12G, 3/4"C	1
EF-KILN-1B	EXHAUST FAN	1/6	TS	120 V/1-75 VA	4.4	5.5	15	2B2	16	2#12, 1#12G, 3/4"C	1
EF-KILN-2A	EXHAUST FAN	1/3	TS	120 V/1-75 VA	7.2	9	15	2B1	41	2#12, 1#12G, 3/4"C	1
EF-KILN-2B	EXHAUST FAN	1/6	TS	120 V/1-75 VA	4.4	5.5	15	2B2	18	2#12, 1#12G, 3/4"C	1
EF-KILN-3A	EXHAUST FAN	1/3	TS	120 V/1-720 VA	7.2	9	15	2B1	31	2#12, 1#12G, 3/4"C	1
EF-KILN-3B	EXHAUST FAN	1/6	TS	120 V/1-75 VA	4.4	5.5	15	2B2	20	2#12, 1#12G, 3/4"C	1
EF-KILN-136	EXHAUST FAN	1/6	TS	120 V/1-75 VA	4.4	5.5	15	2B2	31	2#12, 1#12G, 3/4"C	1
EF-R1	EXHAUST FAN	1/4	TS	120 V/1-141 VA	5.8	7.25	15	2B1	37	2#12, 1#12G, 3/4"C	1
EF-R1	EXHAUST FAN	1/4	TS	120 V/1-696 VA	5.8	7.25	15	2B1	4	2#12, 1#12G, 3/4"C	1
EF-R2	EXHAUST FAN	1/4	TS	120 V/1-696 VA	5.8	7.25	15	2B1	39	2#12, 1#12G, 3/4"C	1
EF-R3	EXHAUST FAN	1/4	TS	120 V/1-696 VA	5.8	7.25	15	2B3	35	2#12, 1#12G, 3/4"C	1
EF-R4	EXHAUST FAN	1/4	TS	120 V/1-696 VA	5.8	7.25	15	2B3	37	2#12, 1#12G, 3/4"C	1
SF-M100	EXHAUST FAN	1/2	TS	120 V/1-106 VA	9.8	12.25	20	2B2	22	2#12, 1#12G, 3/4"C	1
CP-1	PUMP	1/6	TS	120 V/1-252 VA	2.1	2.6	15	2B1	33	2#12, 1#12G, 3/4"C	2
CP-2	PUMP	1/6	TS	120 V/1-252 VA	2.1	2.6	15	2B3	23	2#12, 1#12G, 3/4"C	2
CP-3	PUMP	1/6	TS	120 V/1-252 VA	2.1	2.6	15	2B3	25	2#12, 1#12G, 3/4"C	2
CP-4	PUMP	1/6	TS	120 V/1-252 VA	2.1	2.6	15	2B3	4	2#12, 1#12G, 3/4"C	2
CP-5	PUMP	1/6	TS	120 V/1-252 VA	2.1	2.6	15	2B3	29	2#12, 1#12G, 3/4"C	2
CP-6	PUMP	1/6	TS	120 V/1-252 VA	2.1	2.6	15	2B3	27	2#12, 1#12G, 3/4"C	2
HHWP-1	PUMP	7.5	TS	480 V/3-9144 VA	11	13.75	15	4B3	25,27,29	3#12, 1#12G, 3/4"C	2,6
HHWP-2	PUMP	7.5	TS	480 V/3-9144 VA	11	13.75	15	4B3	31,33,35	3#12, 1#12G, 3/4"C	2,6
RTU-1	ROOFTOP UNIT	8 + 7.5 + 2	100A	480 V/3-41010 VA	49.4	56.9	80	4B2	1,3,5	3#6, 1#10G, 3/4"C	3,5
RTU-2	ROOFTOP UNIT	10 + 5.8	200A	480 V/3-79479 VA	95.6	101.4	110	4B1	13,15,17	3#2, 1#6G, 1 1/4"C	3,5
RTU-2 ALT	ROOFTOP UNIT	10 + 5.8	200A	480 V/3-0 VA	75.2	81	100	4B1	25,27,29	3#4, 1#8G, 1"C	3,5
RTU-3	ROOFTOP UNIT	8 + 2	100A	480 V/3-52125 VA	62.7	68.4	90	4B3	1,3,5	3#4, 1#8G, 1"C	3,5
RTU-4	ROOFTOP UNIT	10 + 5.4	200A	480 V/3-79479 VA	95.6	101.4	110	4B3	7,9,11	3#2, 1#6G, 1 1/4"C	3,5
RTU-5	ROOFTOP UNIT	(2) 4 HP	100A	480 V/3-52125 VA	62.7	68.4	90	4B2	7,9,11	3#4, 1#8G, 1"C	3,5
RTU-6	ROOFTOP UNIT	8 + 7.5 + 2	100A	480 V/3-41010 VA	48.6	56.1	80	4B2	13,15,17	3#6, 1#10G, 3/4"C	3,5
RTU-7	ROOFTOP UNIT	8 + 7.5 + 2	100A	480 V/3-50547 VA	62.7	68.4	90	4B2	19,21,23	3#4, 1#8G, 1"C	3,5
RTU-8	ROOFTOP UNIT	10 + 5	200A	480 V/3-74490 VA	89.6	95.4	110	4B3	13,15,17	3#3, 1#6G, 1 1/4"C	3,5
RTU-9	ROOFTOP UNIT	1.3	30A	480 V/3-9726 VA	11.7	13	15	4B1	19,21,23	3#12, 1#12G, 3/4"C	3,5
AC-E100	SPLIT SYSTEM INDOOR UNIT	-	TS	120 V/1-180 VA	0.36	1	15	2B2	37	2#12, 1#12G, 3/4"C	1
AC-E102	SPLIT SYSTEM INDOOR UNIT	-	TS	120 V/1-180 VA	0.36	1	15	2B3	2	2#12, 1#12G, 3/4"C	1
AC-E201	SPLIT SYSTEM INDOOR UNIT	-	TS	120 V/1-180 VA	0.36	1	15	2B3	21	2#12, 1#12G, 3/4"C	1
CU-E100	SPLIT SYSTEM OUTDOOR UNIT	-	30A	208 V/2-3744 VA	18	21	25	2B2	13,15	2#12, 1#12G, 3/4"C	4
CU-E102	SPLIT SYSTEM OUTDOOR UNIT	-	30A	208 V/2-3744 VA	18	21	25	2B3	39,41	2#12, 1#12G, 3/4"C	4
CU-E201	SPLIT SYSTEM OUTDOOR UNIT	-	30A	208 V/2-3744 VA	18	21	25	2B3	9,11	2#12, 1#12G, 3/4"C	4
UH-100	UNIT HEATER	-	TS	120 V/1-100 VA	0.8	1	15	2B2	29	2#12, 1#12G, 3/4"C	2
VAV-4-147B	VAV BOX	-	TS	277 V/1-2500 VA	9.1	11.3	15	4B3	19	2#12, 1#12G, 3/4"C	1
WH-1	WATER HEATER	-	TS	120 V/1-600 VA	5	6.25	15	2B2	2	2#12, 1#12G, 3/4"C	2
WH-2	WATER HEATER	-	TS	120 V/1-600 VA	5	6.25	15	2B2	39	2#12, 1#12G, 3/4"C	2
WH-3	WATER HEATER	-	TS	120 V/1-600 VA	5	6.25	15	2B2	4	2#12, 1#12G, 3/4"C	2
WH-4	WATER HEATER	-	TS	120 V/1-600 VA	5	6.25	15	2B2	41	2#12, 1#12G, 3/4"C	2
WH-5	WATER HEATER	-	TS	120 V/1-600 VA	5	6.25	15	2B3	31	2#12, 1#12G, 3/4"C	2
WH-6	WATER HEATER	-	TS	120 V/1-600 VA	5	6.25	20	2B3	33	2#12, 1#12G, 3/4"C	2

GENERAL MECHANICAL EQUIPMENT CONNECTION NOTES:

A. THE ABOVE INFORMATION IS FOR A SPECIFIC MANUFACTURER. THE ACTUAL MANUFACTURER FOR THE EQUIPMENT MAY DIFFER. COORDINATE WITH MECHANICAL SUBMITTALS FOR ACTUAL LOADS, CIRCUIT AMPACITY, AND OVERCURRENT PROTECTION REQUIREMENTS PRIOR TO MAKING ELECTRICAL CONNECTIONS.
B. LOCATE ALL DISCONNECTING MEANS PER NEC AND AHJ REQUIREMENTS. STARTERS ARE SEPARATELY MOUNTED UNLESS OTHERWISE NOTED.
C. ALL DISCONNECTS ARE 3 POLE UNLESS OTHERWISE NOTED.

MECHANICAL EQUIPMENT SCHEDULE NOTES:

1. CONTROL BY BUILDING DDC SYSTEM. DDC SYSTEM CONNECTION PROVIDED BY DIV. 23 CONTRACTOR.
2. CONTROL BY DIVISION 23 CONTRACTOR.
3. FURNISH DUCT SMOKE DETECTOR FOR INSTALLATION BY DIVISION 23 CONTRACTOR. HVAC UNITS OVER 2000CFM TO HAVE DUCT DETECTOR IN THE RETURN AIR DUCT. COORDINATE WITH DIVISION 23 FOR QUANTITY REQUIRED. PROVIDE CONNECTION AT HVAC UNIT FOR SHUTDOWN ON ALARM AND CONNECTION TO THE FIRE ALARM CONTROL PANEL FOR DETECTOR CONNECTION AS REQUIRED. ALL WIRING TO BE IN EMT CONDUIT.
4. PROVIDE EXTERIOR UNIT, DISCONNECTING MEANS TO BE NEMA 3R RATED.
5. DISCONNECTING MEANS TO BE NEMA 3R RATED, FURNISHED BY RTU MANUFACTURER AND INSTALLED BY DIVISION 26.
6. VFD FURNISHED BY DIV 23 AND INSTALLED BY DIV 26.

BID/PERMIT SET

CONDITIONAL USE NUMBER: CU2018-0016
DESIGN REVIEW NUMBER: DR2018-0114
SITE DEVELOPMENT PERMIT NUMBER: TBD
BUILDING PERMIT NUMBER: TBD

REGISTERED PROFESSIONAL ENGINEER
86828PE
OREGON
JULY 10, 2012
DANA STEPHENS
EXPIRES: 6/30/2020

ELECTRICAL SCHEDULES
ACMA
BEAVERTON SCHOOL DISTRICT

E7.2
74-18109-00
03/14/2019
REVISIONS

DLR Group
Architecture Engineering Planning Interiors

©2019, DLR Group Architecture & Engineering Inc., an Oregon corporation, ALL RIGHTS RESERVED

C:\Revit\74-18109-00_ACMA_MEP_2018_Central_ostephens.rvt
3/13/2019 11:23:28 PM

SWITCHBOARD: 4MDP

LOCATION: ELECTRICAL E101
BUS RATING: 1200 A
MAIN BREAKER: 1200/3

VOLTAGE: 480Y / 277
PHASES: 3
WIRES: 4
SCCR: 65,000A

CKT	CIRCUIT DESCRIPTION	BKR TRIP	P	BKR TYPE	LOAD TYPE	LOAD (kVA)	NOTES
1	PANEL 4A1	200 A	3		Other;...	37	
2							
3	PANEL 4B1	800 A	3		M	510	
4							
5	PANEL 4SB1	200 A	3		L; R; L...	58	
6							
7	PANEL 4LS1	100 A	3		Other;...	5	
8							
9							
10							
11							
12							
13							
14							
15							
16							
17							
18							
19							
20							

TOTAL LOAD: 603 kVA
TOTAL AMPS: 726 A

LOAD TYPE	LOAD DESCRIPTION	CONNECTED LOAD (VA)	DEMAN D...	ESTIMATED DEMAND (VA)	DEMAND FACTOR NOTES	BKR TYPE	PANEL TOTALS
L	LIGHTING	36119 VA	125.00%	45149 VA	CONTINUOUS LOAD @ 125%	G = GFCI (5mA)	
R	RECEPTACLES	5760 VA	100.00%	5760 VA	FIRST 10KVA @ 100%, REMAINDER @ 50%	GP = GFCI (30mA)	CONNECTED LOAD: 603 kVA
K	KITCHEN	0 VA	0.00%	0 VA	NON-DWELLING KITCHEN EQUIPMENT, NEC ART. 220	ST = SHUNT TRIP	ESTIMATED DEMAND: 619 kVA
LM	LARGEST MOTOR	28266 VA	125.00%	35333 VA	LARGEST MOTOR, NEC ART. 430	LO = LOCK OUT	CONNECTED CURRENT: 726 A
M	MOTOR	509923 VA	100.00%	509923 VA			EMD CURRENT: 744 A
C	COOLING	0 VA	0.00%	0 VA			
H	HEATING	0 VA	0.00%	0 VA			
O	OTHER	0 VA	0.00%	0 VA			
Spare	SPARE	22095 VA	100.00%	22095 VA			

NOTES:

PANEL: 4A1

LOCATION: ELECTRICAL E101
BUS RATING: 200 A
MAIN BREAKER: 200A MLO

VOLTS: 480Y / 277
PHASES: 3
WIRES: 4
SCCR: 18000 A

MOUNTING: SURFACE
FED FROM: 4MDP
INTEGRAL SPD: Type 1
LUG ACCESSORIES: SEE ONE-LINE

CKT	CIRCUIT DESCRIPTION	BKR TRIP	P	BKR TYPE	LOAD TYPE	PHASE A (VA)		PHASE B (VA)		PHASE C (VA)		LOAD TYPE	BKR TYPE	P	BKR TRIP	CIRCUIT DESCRIPTION	CKT
1	4A2	100	3		Lightin...	5,820											2
3	--	--	--	--	--			3,569									4
5	--	--	--	--	--					1,690							6
7	4A3	100	3		Other;...	5,027											8
9	--	--	--	--	--			3,895									10
11	--	--	--	--	--					3,248							12
13	LTG - ENSEMBLE ROOMS, LIBRARY, PC LAB	20	1		L	2,989											14
15	LTG - AREA A CORRIDORS	20	1		L			2,628									16
17	LTG - ADMIN CORE AREA A	20	1		L					2,334							18
19	LTG - CAREER CENTER CORE, RR'S,...	20	1		Lightin...	2,019											20
21	LTG - KITCHEN, ELEC RMS	20	1		L			1,062									22
23	BLDG EXT LTG - SOUTH	20	1		Lightin...					391							24
25	BLDG EXT LTG - NORTH	20	1		Lighting	252											26
27	SITE LIGHTING - PARKING LOT	20	1		L			1,060									28
29	SITE LIGHTING - DROPOFF	20	1		Lightin...					942							30
31																	32
33																	34
35																	36
37																	38
39																	40
41																	42
					TOTAL LOAD:	16095 VA		12174 VA		8561 VA							
					TOTAL AMPS	60 A		46 A		31 A							

LOAD TYPE	LOAD DESCRIPTION	CONNECTED LOAD (VA)	DEMAN D...	ESTIMATED DEMAND (VA)	DEMAND FACTOR NOTES	BKR TYPE	PANEL TOTALS
L	LIGHTING	30743 VA	125.00%	38429 VA	CONTINUOUS LOAD @ 125%	G = GFCI (5mA)	
R	RECEPTACLES	0 VA	0.00%	0 VA	FIRST 10KVA @ 100%, REMAINDER @ 50%	GP = GFCI (30mA)	CONNECTED LOAD: 37 kVA
K	KITCHEN	0 VA	0.00%	0 VA	NON-DWELLING KITCHEN LOADS, NEC ART. 220	ST = SHUNT TRIP	ESTIMATED DEMAND: 44 kVA
LM	LARGEST MOTOR	0 VA	0.00%	0 VA	LARGEST MOTOR, NEC ART. 430	LO = LOCK OUT	CONNECTED CURRENT: 44 A
M	MOTOR	0 VA	0.00%	0 VA			EMD CURRENT: 54 A
C	COOLING	0 VA	0.00%	0 VA			
H	HEATING	0 VA	0.00%	0 VA			
O	OTHER	0 VA	0.00%	0 VA			
Spare	SPARE	0 VA	0.00%	0 VA			

NOTES:

SWITCHBOARD: 2MDP-2

LOCATION: ELECTRICAL E101
BUS RATING: 1200 A
MAIN BREAKER: 1200/3

VOLTAGE: 208Y / 120
PHASES: 3
WIRES: 4
SCCR: 65000 A

CKT	CIRCUIT DESCRIPTION	BKR TRIP	P	BKR TYPE	LOAD TYPE	LOAD (kVA)	NOTES
1	2A1	200 A	3		R; K; O...	25	
2	2B1	200 A	3		Motor;...	88	
3	2K1-1	400 A	3		R; K; M	111	
4	2A2-1	200 A	3		R; K; O...	28	
5	2A2-2	200 A	3		HVAC; ...	37	
6	2A3-1	200 A	3		L; R; O;...	32	
7	2A3-2	200 A	3		L; R; M	38	
8							
9							
10							
11							
12							
13							
14							
15							
16							
17							
18							
19							
20							

TOTAL LOAD: 357 kVA
TOTAL AMPS: 990 A

LOAD TYPE	LOAD DESCRIPTION	CONNECTED LOAD (VA)	DEMAN D...	ESTIMATED DEMAND (VA)	DEMAND FACTOR NOTES	BKR TYPE	PANEL TOTALS
L	LIGHTING	10000 VA	125.00%	12500 VA	CONTINUOUS LOAD @ 125%	G = GFCI (5mA)	
R	RECEPTACLES	127460 VA	53.92%	68730 VA	FIRST 10KVA @ 100%, REMAINDER @ 50%	GP = GFCI (30mA)	CONNECTED LOAD: 357 kVA
K	KITCHEN	111244 VA	65.00%	72309 VA	NON-DWELLING KITCHEN EQUIPMENT, NEC ART. 220	ST = SHUNT TRIP	ESTIMATED DEMAND: 262 kVA
LM	LARGEST MOTOR	0 VA	0.00%	0 VA	LARGEST MOTOR, NEC ART. 430	LO = LOCK OUT	CONNECTED CURRENT: 990 A
M	MOTOR	81843 VA	100.00%	81843 VA			EMD CURRENT: 727 A
C	COOLING	11772 VA	100.00%	11772 VA			
H	HEATING	12295 VA	100.00%	12295 VA			
O	OTHER	2000 VA	100.00%	2000 VA			
Spare	SPARE	0 VA	0.00%	0 VA			

NOTES:

PANEL: 4B1

LOCATION: ELECTRICAL E101
BUS RATING: 800 A
MAIN BREAKER: 800A/3

VOLTS: 480Y / 277
PHASES: 3
WIRES: 4
SCCR:

MOUNTING: SURFACE
FED FROM: 4MDP
INTEGRAL SPD: Type 1
LUG ACCESSORIES: SEE ONE-LINE

CKT	CIRCUIT DESCRIPTION	BKR TRIP	P	BKR TYPE	LOAD TYPE	PHASE A (VA)		PHASE B (VA)		PHASE C (VA)		LOAD TYPE	BKR TYPE	P	BKR TRIP	CIRCUIT DESCRIPTION	CKT
1	4B2	400	3		M	61,564											2
3	--	--	--	--	--			61,564									4
5	--	--	--	--	--					61,564							6
7	4B3	400	3		M	80,342											8
9	--	--	--	--	--			77,842									10
11	--	--	--	--	--					77,842							12
13	RTU-2	125	3		M	26,493											14
15	--	--	--	--	--			26,493									16
17	--	--	--	--	--					26,493							18
19	RTU-9	20	3		M	3,242											20
21	--	--	--	--	--			3,242									22
23	--	--	--	--	--					3,242							24
25	M	20	3		M	0											26
27	--	--	--	--	--			0									28
29	--	--	--	--	--					0							30
31																	32
33																	34
35																	36
37																	38
39																	40
41																	42
					TOTAL LOAD:	171641 VA		169141 VA		169141 VA							
					TOTAL AMPS	620 A		611 A		611 A							

LOAD TYPE	LOAD DESCRIPTION	CONNECTED LOAD (VA)	DEMAN D...	ESTIMATED DEMAND (VA)	DEMAND FACTOR NOTES	BKR TYPE	PANEL TOTALS
L	LIGHTING	0 VA	0.00%	0 VA	CONTINUOUS LOAD @ 125%	G = GFCI (5mA)	
R	RECEPTACLES	0 VA	0.00%	0 VA	FIRST 10KVA @ 100%, REMAINDER @ 50%	GP = GFCI (30mA)	CONNECTED LOAD: 510 kVA
K	KITCHEN	0 VA	0.00%	0 VA	NON-DWELLING KITCHEN LOADS, NEC ART. 220	ST = SHUNT TRIP	ESTIMATED DEMAND: 510 kVA
LM	LARGEST MOTOR	0 VA	0.00%	0 VA	LARGEST MOTOR, NEC ART. 430	LO = LOCK OUT	CONNECTED CURRENT: 613 A
M	MOTOR	509923 VA	100.00%	509923 VA			EMD CURRENT: 613 A
C	COOLING	0 VA	0.00%	0 VA			
H	HEATING	0 VA	0.00%	0 VA			
O	OTHER	0 VA	0.00%	0 VA			
Spare	SPARE	0 VA	0.00%	0 VA			

NOTES:

BID/PERMIT SET

CONDITIONAL USE NUMBER: CU2018-0016
DESIGN REVIEW NUMBER: DR2018-0114
SITE DEVELOPMENT PERMIT NUMBER: TBD
BUILDING PERMIT NUMBER: TBD

REGISTERED PROFESSIONAL ENGINEER
86828PE
OREGON
JULY 10, 2012
OMAR STEPHENS
EXPIRES: 6/30/2020
03/13/19

PANEL SCHEDULES
ACMA
BEAVERTON SCHOOL DISTRICT

E8.1
74-18109-00
03/14/2019
REVISIONS

DLR Group
Architecture Engineering Planning Interiors

© 2019, DLR Group Architecture & Engineering Inc., an Oregon corporation, ALL RIGHTS RESERVED

C:\Revit\74-18109-00_ACMA_MEP_2018_Central_ostephens.rvt
3/13/2019 11:23:37 PM

PANEL: 2B1

LOCATION: ELECTRICAL E101
BUS RATING: 400 A
MAIN BREAKER: 400 MLO

VOLTS: 208Y / 120
PHASES: 3
WIRES: 4
SCCR: 10000 A

MOUNTING: FLUSH
FED FROM: 2MDP-2
INTEGRAL SPD: Type 1
LUG ACCESSORIES: SEE ONE-LINE

CKT	CIRCUIT DESCRIPTION	BKR TRIP	P	BKR TYPE	LOAD TYPE	PHASE A (VA)		PHASE B (VA)		PHASE C (VA)		LOAD TYPE	BKR TYPE	P	BKR TRIP	CIRCUIT DESCRIPTION	CKT
1	2B3	100	3		C; H; M	6,544	250					R; M		1	20	EF-KILN-1A EXHAUST RECEPTS - KILN 136	2
3	--	--	--	--	--			7,724	696			M		1	20	M SMALL ENSEMBLE 122	4
5	--	--	--	--	--					7,640	480	M		1	15	EF-101A	6
7	2B2	200	3		HVAC;...	17,479											8
9	--	--	--	--	--			17,647									10
11	--	--	--	--	--					15,969							12
13	EF-133A	40	1		M	2,400											14
15	EF-E101	15	1		M			696									16
17	EUH-101	20	3		H					1,666							18
19	--	--	--	--	--	1,666											20
21	--	--	--	--	--			1,666									22
23	CUH-100	15	1		H					252							24
25	EF-133B, EF-133C	20	1		M	1,176											26
27	EUH-140	20	2		H			1,500									28
29	--	--	--	--	--					1,500							30
31	EF-KILN-3A EXHAUST RECEPTS - KILN 136	20	1		R; M	885											32
33	CP-1	15	1		M			252									34
35	WEST VESTIBULE - ADA DOORS	20	1		Motor					180							36
37	EF-R1	15	1		H	141											38
39	EF-R2	15	1		M			696									40
41	EF-KILN-2A EXHAUST RECEPTS - KILN 136	20	1		R; M					250							42
					TOTAL LOAD:	30262 VA		30591 VA		27606 VA							
					TOTAL AMPS	256 A		258 A		230 A							

LOAD TYPE	LOAD DESCRIPTION	CONNECTED LOAD (VA)	DEMAN D...	ESTIMATED DEMAND (VA)	DEMAND FACTOR NOTES	BKR TYPE	PANEL TOTALS
L	LIGHTING	0 VA	0.00%	0 VA	CONTINUOUS LOAD @ 125%	G = GFCI (5mA)	
R	RECEPTACLES	540 VA	100.00%	540 VA	FIRST 10KVA @ 100%, REMAINDER @ 50%	GP = GFCI (30mA)	CONNECTED LOAD: 88 kVA
K	KITCHEN	0 VA	0.00%	0 VA	NON-DWELLING KITCHEN LOADS, NEC ART. 220	ST = SHUNT TRIP	ESTIMATED DEMAND: 88 kVA
LM	LARGEST MOTOR	0 VA	0.00%	0 VA	LARGEST MOTOR, NEC ART. 430	LO = LOCK OUT	CONNECTED CURRENT: 246 A
M	MOTOR	63972 VA	100.00%	63972 VA			EMD CURRENT: 246 A
C	COOLING	11772 VA	100.00%	11772 VA			
H	HEATING	12295 VA	100.00%	12295 VA			
O	OTHER	0 VA	0.00%	0 VA			
Spare	SPARE	0 VA	0.00%	0 VA			

NOTES:

PANEL: 2K1-1

LOCATION: Space 302
BUS RATING: 400 A
MAIN BREAKER: 400/3

VOLTS: 208Y / 120
PHASES: 3
WIRES: 4
SCCR: 10000 A

MOUNTING: FLUSH
FED FROM: 2MDP-2
INTEGRAL SPD: Type 1
LUG ACCESSORIES: SEE ONE-LINE

CKT	CIRCUIT DESCRIPTION	BKR TRIP	P	BKR TYPE	LOAD TYPE	A		B		C		LOAD TYPE	BKR TYPE	P	BKR TRIP	CIRCUIT DESCRIPTION	CKT
1	WALK-IN COOLER CONDENSING UNIT	20	3		K	576	4,095					K		3	50	TILTING KETTLE	2
3	--	--	--	--	--			576	4,095			--	--	--	--	--	4
5	--	--	--	--	--					576	4,095	--	--	--	--	--	6
7	WALK-IN FREEZER CONDENSING UNIT	20	3		K	1,237											8
9	--	--	--	--	--			1,237									10
11	--	--	--	--	--					1,237							12
13	WALK-IN DRAIN LINE HEATER	20	1		K	500	5,000					K		3	60	WAREWASHER (TANK HEAT/MOTORS)	14
15	WALK-IN COOLER EVAPORATOR	20	1		K			360	5,000			--	--	--	--	--	16
17	WALK-IN COOLER AND FREEZER LIGHTS	20	1		K					320	5,000	--	--	--	--	--	18
19	WALK-IN DOOR HEATER	20	1		K	500	10,000					K		3	125	WAREWASHER BOOSTER HEATER	20
21	WALK-IN FREEZER EVAPORATOR	20	2		K			1,040	10,000			--	--	--	--	--	22
23	--	--	--	--	--					1,040	10,000	--	--	--	--	--	24
25	REACH-IN REFRIGERATOR	20	1		K	984	1,440					K		1	20	WAREWASHER DETERGENT FEED	26
27	MOBILE HOT HOLDING CABINET	20	1		K			1,500	936			K		3	20	DISPOSER	28
29	CONVECTION OVEN	20	1		K					720	936	--	--	--	--	--	30
31	COMBI-OVEN STEAMER	20	2		K	624	936					--	--	--	--	--	32
33	--	--	--	--	--			624	1,000			K		1	20	FIRE PROTECTION SYSTEM	34
35	BOIL COOK TOP	40	2		K					3,000	1,440	K		1	20	KITCHEN RCPT - CONVENIENCE	36
37	--	--	--	--	--	3,000	11,284					R; K; M		3	400	2K1-2 (SECOND SECTION FEED THRU)	38
39	CANOPY HOOD LIGHTS	20	1		K			320	10,204			--	--	--	--	--	40
41											5,416	--	--	--	--	--	42
					TOTAL LOAD:	40176 VA		36892 VA		33780 VA							
					TOTAL AMPS	339 A		311 A		282 A							

LOAD TYPE	LOAD DESCRIPTION	CONNECTED LOAD (VA)	DEMAN D...	ESTIMATED DEMAND (VA)	DEMAND FACTOR NOTES	BKR TYPE	PANEL TOTALS
L	LIGHTING	0 VA	0.00%	0 VA	CONTINUOUS LOAD @ 125%	G = GFCI (5mA)	
R	RECEPTACLES	360 VA	100.00%	360 VA	FIRST 10KVA @ 100%, REMAINDER @ 50%	GP = GFCI (30mA)	CONNECTED LOAD: 111 kVA
K	KITCHEN	110308 VA	65.00%	71700 VA	NON-DWELLING KITCHEN LOADS, NEC ART. 220	ST = SHUNT TRIP	ESTIMATED DEMAND: 72 kVA
LM	LARGEST MOTOR	0 VA	0.00%	0 VA	LARGEST MOTOR, NEC ART. 430	LO = LOCK OUT	CONNECTED CURRENT: 308 A
M	MOTOR	180 VA	100.00%	180 VA			EMD CURRENT: 201 A
C	COOLING	0 VA	0.00%	0 VA			
H	HEATING	0 VA	0.00%	0 VA			
O	OTHER	0 VA	0.00%	0 VA			
Spare	SPARE	0 VA	0.00%	0 VA			

NOTES:

PANEL: 2A1

LOCATION: ELECTRICAL E101
BUS RATING: 225 A
MAIN BREAKER: 200 MLO

VOLTS: 208Y / 120
PHASES: 3
WIRES: 4
SCCR: 10000 A

MOUNTING: FLUSH
FED FROM: 2MDP-2
INTEGRAL SPD: Type 1
LUG ACCESSORIES: SEE ONE-LINE

CKT	CIRCUIT DESCRIPTION	BKR TRIP	P	BKR TYPE	LOAD TYPE	A		B		C		LOAD TYPE	BKR TYPE	P	BKR TRIP	CIRCUIT DESCRIPTION	CKT
1	RCPTS - ENTRY CORRIDORS	20	1		R	1,080	540					R		1	20	RCPTS - NORTH RAMPS, MUSIC HALL	2
3	RCPTS - EAST WEST HALL, STORAGE	20	1		R			900	1,080			R		1	20	RCPTS - LARGE ENSEMBLE	4
5	BOTTLE FILLER - EAST WEST HALL	20	1		R					180	900	R		1	20	RCPTS - LARGE ENSEMBLE	6
7	RCPTS - FILM 114	20	1		R	720	720					R		1	20	RCPTS - ENSEMBLE PRACTICE	8
9	RCPTS - FILM 114	20	1		R			1,080	900			R		1	20	RCPTS - OFFICE 123	10
11	RCPTS - FILM 114	20	1		R					720	360	R		1	20	RCPTS - PRACTICE RM 125	12
13	RCPT - FILM STUDIO 114A	20	1		R	180	360					R		1	20	RCPTS - PRACTICE RM 127	14
15	RCPT - FILM STUDIO 114A	20	1		R			180	540			R		1	20	RCPTS - PRACTICE RM 129, STORAGE 121A	16
17	RCPT - FILM STORAGE 114B	20	1		R					180	180	R		1	20	RCPTS - RECORDING, STORAGE	18
19	RCPT - FILM STORAGE 114B	20	1		R	180	180					R		1	20	RCPT - RECORDING 124A	20
21	RCPT - SOUND STUDIO 114C	20	1		R			180	180			R		1	20	RCPT - RECORDING 124A	22
23	RCPT - SOUND STUDIO 114C	20	1		R					180	900	R		1	20	RCPTS - SMALL ENSEMBLE	24
25	RCPTS - COMPUTER LAB 113	20	1		R	900	540					R		1	20	RCPTS - SMALL ENSEMBLE	26
27	RCPTS - COMPUTER LAB 113	20	1		R			900	360			R		1	20	RCPTS - SMALL ENSEMBLE	28
29	RCPTS - COMPUTER LAB 113	20	1		R					720	180	R		1	20	BOTTLE FILLER - MUSIC HALLWAY	30
31	RCPTS - COMPUTER LAB 113	20	1		R	720	0					--		1	20	SPARE	32
33	RCPTS - COMPUTER LAB 113	20	1		R			540	0			--		1	20	SPARE	34
35	RCPTS - COMPUTER LAB 113	20	1		R					540	0	--		1	20	SPARE	36
37	RCPTS - COMPUTER LAB 113	20	1		R	900	0					--		1	20	SPARE	38
39	RCPTS - LIT/IT OFFICE 113	20	1		R			360	0			--		1	20	SPARE	40
41	RCPTS - LIT/IT OFFICE 113	20	1		R					540	360	R		1	20	ROOFTOP RECEPTS - SOUTH	42
43	COPIER - LIBRARY	20	1		O	500	576					K		1	20	IRRIGATION CONTROLLER RECEPT	44
45	RCPTS - LIBRARY DESK	20	1		R			900	360			M		1	20	ADA PUSH BUTTON - RECEPTION	46
47	RCPTS - LIBRARY	20	1		R					540	180	M		1	20	ADA PUSH BUTTONS - ENTRY VEST	48
49	RCPTS - LIBRARY	20	1		R	720											50
51	RCPTS - LIBRARY	20	1		R			540									52
53	RCPTS - LIBRARY	20	1		R					540							54
55																	56
57																	58
59																	60
61																	62
63																	64
65																	66
					TOTAL LOAD:	8816 VA		9000 VA		7200 VA							
					TOTAL AMPS	76 A		77 A		60 A							

LOAD TYPE	LOAD DESCRIPTION	CONNECTED LOAD (VA)	DEMAN D...	ESTIMATED DEMAND (VA)	DEMAND FACTOR NOTES	BKR TYPE	PANEL TOTALS
L	LIGHTING	0 VA	0.00%	0 VA	CONTINUOUS LOAD @ 125%	G = GFCI (5mA)	
R	RECEPTACLES	23400 VA	71.37%	16700 VA	FIRST 10KVA @ 100%, REMAINDER @ 50%	GP = GFCI (30mA)	CONNECTED LOAD: 25 kVA
K	KITCHEN	576 VA	100.00%	576 VA	NON-DWELLING KITCHEN LOADS, NEC ART. 220	ST = SHUNT TRIP	ESTIMATED DEMAND: 18 kVA
LM	LARGEST MOTOR	0 VA	0.00%	0 VA	LARGEST MOTOR, NEC ART. 430	LO = LOCK OUT	CONNECTED CURRENT: 69 A
M	MOTOR	540 VA	100.00%	540 VA			EMD CURRENT: 51 A
C	COOLING	0 VA	0.00%	0 VA			
H	HEATING	0 VA	0.00%	0 VA			
O	OTHER	500 VA	100.00%	500 VA			
Spare	SPARE	0 VA	0.00%	0 VA			

NOTES:

PANEL: 2K1-2

LOCATION: Space 302
BUS RATING: 400 A
MAIN BREAKER: MLO

VOLTS: 208Y / 120
PHASES: 3
WIRES: 4
SCCR: 10000 A

MOUNTING: FLUSH
FED FROM: 2K1-1
INTEGRAL SPD: Type 1
LUG ACCESSORIES: SEE ONE-LINE

CKT	CIRCUIT DESCRIPTION	BKR TRIP	P	BKR TYPE	LOAD TYPE	PHASE A (VA)		PHASE B (VA)		PHASE C (VA)		LOAD TYPE	BKR TYPE	P	BKR TRIP	CIRCUIT DESCRIPTION	CKT
1	MICROWAVE OVEN	20	1		K	1,600											2
3	MOBILE HOT HOLDING CABINET	20	1		K			1,440									4
5	MOBILE HOT HOLDING CABINET	20	1		K					1,440							6
7	HEATED PASS-THRU GRAB 'N GO CASE	20	1		K	1,644											8
9	HEATED PASS-THRU GRAB 'N GO CASE	20	1		K			1,644									10
11	HEAT TRACING FOR CANWASH	20	1		K					576							12
13	HOT/COLD FOOD SERVING COUNTER	40	2		K	2,730											14
15	--	--	--	--	--			2,730									16
17	COLD FOOD SERVING COUNTER	20	1		K					960							18
19	COLD FOOD SERVING COUNTER	20	1		K	960											20
21	MOBILE REFRIGERATED MILK COOLER	20	1		K			480									22
23	REFRIGERATED MERCHANDISING CASE	20	1		K					1,080							24
25	REFRIGERATED MERCHANDISING CASE	20	1		K	1,080											26
27	POINT OF SALE SYSTEM	20	1		K			1,000									28
29	POINT OF SALE SYSTEM	20	1		K					1,000							30
31	HOT/COLD FOOD SERVING COUNTER	40	2		K	2,730											32
33	--	--	--	--	--			2,730									34
35	KITCHEN - GEN RCPT	20	1		R					360							36
37	RCPTS - STORAGE 133A	20	1		K	540											38
39	EMERGENCY SHUTOFF VALVE	20	1		M			180									40
41																	42
					TOTAL LOAD:	11284 VA		10204 VA		5416 VA							
					TOTAL AMPS	100 A		91 A		45 A							

LOAD TYPE	LOAD DESCRIPTION	CONNECTED LOAD (VA)	DEMAN D...	ESTIMATED DEMAND (VA)	DEMAND FACTOR NOTES	BKR TYPE	PANEL TOTALS
L	LIGHTING	0 VA	0.00%	0 VA	CONTINUOUS LOAD @ 125%	G = GFCI (5mA)	
R	RECEPTACLES	360 VA	100.00%	360 VA	FIRST 10KVA @ 100%, REMAINDER @ 50%	GP = GFCI (30mA)	CONNECTED LOAD: 27 kVA
K	KITCHEN	26364 VA	65.00%	17137 VA	NON-DWELLING KITCHEN LOADS, NEC ART. 220	ST = SHUNT TRIP	ESTIMATED DEMAND: 18 kVA
LM	LARGEST MOTOR	0 VA	0.00%	0 VA	LARGEST MOTOR, NEC ART. 430	LO = LOCK OUT	CONNECTED CURRENT: 75 A
M	MOTOR	180 VA	100.00%	180 VA			EMD CURRENT: 49 A
C	COOLING	0 VA	0.00%	0 VA			
H	HEATING	0 VA	0.00%	0 VA			
O	OTHER	0 VA	0.00%	0 VA			
Spare	SPARE	0 VA	0.00%	0 VA			

NOTES:

BID/PERMIT SET

CONDITIONAL USE NUMBER: CU2018-0016
DESIGN REVIEW NUMBER: DR2018-0314
SITE DEVELOPMENT PERMIT NUMBER: TBD
BUILDING PERMIT NUMBER: TBD

REGISTERED PROFESSIONAL ENGINEER
86628PE
OREGON
JULY 10, 2012
CHNA STEPHENS
EXPIRES: 6/30/2020
03/13/19

BEAVERTON SCHOOL DISTRICT
ACMA
PANEL SCHEDULES

E8.2
74-18109-00
03/14/2019
REVISIONS

DLR Group
Architecture Engineering Planning Interiors

© 2019, DLR Group Architecture & Engineering Inc., an Oregon corporation, ALL RIGHTS RESERVED

C:\Revit\74-18109-00_ACMA_MEP_2018_Central_cstephens.rvt
3/13/2019 11:23:43 PM

PANEL: 4A2

LOCATION: ELECTRICAL E200
BUS RATING: 100 A
MAIN BREAKER: 100/3

VOLTS: 480Y / 277
PHASES: 3
WIRES: 4
SCCR: 14000 A

MOUNTING: SURFACE
FED FROM: 4A1
INTEGRAL SPD: Type 1
LUG ACCESSORIES: SEE ONE-LINE

CKT	CIRCUIT DESCRIPTION	BKR TRIP	P	BKR TYPE	LOAD TYPE	PHASE A (VA)	PHASE B (VA)	PHASE C (VA)	LOAD TYPE	BKR TYPE	P	BKR TRIP	CIRCUIT DESCRIPTION	CKT
1	LTG - RMS 207,209,211,212,214,216	20	1		L	2,214								2
3	LTG - MID STAIR, UPPER-MID CORRIDOR,...	20	1		L		1,851							4
5	LTG - UPPER CORE AREA A	20	1		L			1,690						6
7	LTG - RMS 218,220,234,236	20	1		Lightin...	3,667								8
9	LTG - COMMONS UPPER + UPPER BALCONY	20	1		L		1,725							10
11														12
13														14
15														16
17														18
19														20
21														22
23														24
25														26
27														28
29														30
31														32
33														34
35														36
37														38
39														40
41														42
					TOTAL LOAD:	5820 VA	3569 VA	1690 VA						
					TOTAL AMPS	22 A	14 A	6 A						

LOAD TYPE	LOAD DESCRIPTION	CONNECTED LOAD (VA)	DEMAN D...	ESTIMATED DEMAND (VA)	DEMAND FACTOR NOTES	BKR TYPE	PANEL TOTALS
L	LIGHTING	7640 VA	125.00%	9550 VA	CONTINUOUS LOAD @ 125%	G = GFCI (5mA)	
R	RECEPTACLES	0 VA	0.00%	0 VA	FIRST 10KVA @ 100%, REMAINDER @ 50%	GP = GFCI (30mA)	CONNECTED LOAD: 11 kVA
K	KITCHEN	0 VA	0.00%	0 VA	NON-DWELLING KITCHEN LOADS, NEC ART. 220	ST = SHUNT TRIP	ESTIMATED DEMAND: 13 kVA
LM	LARGEST MOTOR	0 VA	0.00%	0 VA	LARGEST MOTOR, NEC ART. 430	LO = LOCK OUT	CONNECTED CURRENT: 13 A
M	MOTOR	0 VA	0.00%	0 VA			EMD CURRENT: 16 A
C	COOLING	0 VA	0.00%	0 VA			
H	HEATING	0 VA	0.00%	0 VA			
O	OTHER	0 VA	0.00%	0 VA			
Spare	SPARE	0 VA	0.00%	0 VA			

NOTES:

PANEL: 4B2

LOCATION: ELECTRICAL E200
BUS RATING: 400 A
MAIN BREAKER: 400/3

VOLTS: 480Y / 277
PHASES: 3
WIRES: 4
SCCR:

MOUNTING: SURFACE
FED FROM: 4B1
INTEGRAL SPD: Type 1
LUG ACCESSORIES: SEE ONE-LINE

CKT	CIRCUIT DESCRIPTION	BKR TRIP	P	BKR TYPE	LOAD TYPE	PHASE A (VA)	PHASE B (VA)	PHASE C (VA)	LOAD TYPE	BKR TYPE	P	BKR TRIP	CIRCUIT DESCRIPTION	CKT
1	RTU-1	80	3		M	13,670								2
3	--	--	--	--	--		13,670							4
5	--	--	--	--	--			13,670						6
7	RTU-5	90	3		M	17,375								8
9	--	--	--	--	--		17,375							10
11	--	--	--	--	--			17,375						12
13	RTU-6	80	3		M	13,670								14
15	--	--	--	--	--		13,670							16
17	--	--	--	--	--			13,670						18
19	RTU-7	80	3		M	16,849								20
21	--	--	--	--	--		16,849							22
23	--	--	--	--	--			16,849						24
25														26
27														28
29														30
31														32
33														34
35														36
37														38
39														40
41														42
					TOTAL LOAD:	61564 VA	61564 VA	61564 VA						
					TOTAL AMPS	222 A	222 A	222 A						

LOAD TYPE	LOAD DESCRIPTION	CONNECTED LOAD (VA)	DEMAN D...	ESTIMATED DEMAND (VA)	DEMAND FACTOR NOTES	BKR TYPE	PANEL TOTALS
L	LIGHTING	0 VA	0.00%	0 VA	CONTINUOUS LOAD @ 125%	G = GFCI (5mA)	
R	RECEPTACLES	0 VA	0.00%	0 VA	FIRST 10KVA @ 100%, REMAINDER @ 50%	GP = GFCI (30mA)	CONNECTED LOAD: 185 kVA
K	KITCHEN	0 VA	0.00%	0 VA	NON-DWELLING KITCHEN LOADS, NEC ART. 220	ST = SHUNT TRIP	ESTIMATED DEMAND: 185 kVA
LM	LARGEST MOTOR	0 VA	0.00%	0 VA	LARGEST MOTOR, NEC ART. 430	LO = LOCK OUT	CONNECTED CURRENT: 222 A
M	MOTOR	184692 VA	100.00%	184692 VA			EMD CURRENT: 222 A
C	COOLING	0 VA	0.00%	0 VA			
H	HEATING	0 VA	0.00%	0 VA			
O	OTHER	0 VA	0.00%	0 VA			
Spare	SPARE	0 VA	0.00%	0 VA			

NOTES:

PANEL: 4A3

LOCATION: ELECTRICAL E102
BUS RATING: 100 A
MAIN BREAKER: 100/3

VOLTS: 480Y / 277
PHASES: 3
WIRES: 4
SCCR: 14000 A

MOUNTING: SURFACE
FED FROM: 4A1
INTEGRAL SPD: Type 1
LUG ACCESSORIES: SEE ONE-LINE

CKT	CIRCUIT DESCRIPTION	BKR TRIP	P	BKR TYPE	LOAD TYPE	PHASE A (VA)	PHASE B (VA)	PHASE C (VA)	LOAD TYPE	BKR TYPE	P	BKR TRIP	CIRCUIT DESCRIPTION	CKT
1	LTG - RMS 238,	20	1		Lightin...	2,741								2
3	LTG - RMS 243,245,247,249	20	1		Lightin...		2,865							4
5	LTG - RMS 136,138,140,142,144,146	20	1		L			2,683						6
7	LTG - RMS 143,145,147, RR'S	20	1		Other; L	2,299								8
9	LTG - FIRST LEVEL CORRIDOR - NORTH	20	1		L		1,042							10
11	STAGE PLATFORM LIGHTING	20	1		L			588						12
13														14
15														16
17														18
19														20
21														22
23														24
25														26
27														28
29														30
31														32
33														34
35														36
37														38
39														40
41														42
					TOTAL LOAD:	5027 VA	3895 VA	3248 VA						
					TOTAL AMPS	19 A	14 A	12 A						

LOAD TYPE	LOAD DESCRIPTION	CONNECTED LOAD (VA)	DEMAN D...	ESTIMATED DEMAND (VA)	DEMAND FACTOR NOTES	BKR TYPE	PANEL TOTALS
L	LIGHTING	10263 VA	125.00%	12829 VA	CONTINUOUS LOAD @ 125%	G = GFCI (5mA)	
R	RECEPTACLES	0 VA	0.00%	0 VA	FIRST 10KVA @ 100%, REMAINDER @ 50%	GP = GFCI (30mA)	CONNECTED LOAD: 12 kVA
K	KITCHEN	0 VA	0.00%	0 VA	NON-DWELLING KITCHEN LOADS, NEC ART. 220	ST = SHUNT TRIP	ESTIMATED DEMAND: 15 kVA
LM	LARGEST MOTOR	0 VA	0.00%	0 VA	LARGEST MOTOR, NEC ART. 430	LO = LOCK OUT	CONNECTED CURRENT: 15 A
M	MOTOR	0 VA	0.00%	0 VA			EMD CURRENT: 18 A
C	COOLING	0 VA	0.00%	0 VA			
H	HEATING	0 VA	0.00%	0 VA			
O	OTHER	0 VA	0.00%	0 VA			
Spare	SPARE	0 VA	0.00%	0 VA			

NOTES:

PANEL: 4B3

LOCATION: ELECTRICAL E102
BUS RATING: 400 A
MAIN BREAKER: 400/3

VOLTS: 480Y / 277
PHASES: 3
WIRES: 4
SCCR: 14000 A

MOUNTING: SURFACE
FED FROM: 4B1
INTEGRAL SPD: Type 1
LUG ACCESSORIES: SEE ONE-LINE

CKT	CIRCUIT DESCRIPTION	BKR TRIP	P	BKR TYPE	LOAD TYPE	PHASE A (VA)	PHASE B (VA)	PHASE C (VA)	LOAD TYPE	BKR TYPE	P	BKR TRIP	CIRCUIT DESCRIPTION	CKT
1	RTU-3	90	3		M	17,375								2
3	--	--	--	--	--		17,375							4
5	--	--	--	--	--			17,375						6
7	RTU-4	125	3		M	26,493								8
9	--	--	--	--	--		26,493							10
11	--	--	--	--	--			26,493						12
13	RTU-8	125	3		M	24,830								14
15	--	--	--	--	--		24,830							16
17	--	--	--	--	--			24,830						18
19	VAV-4-147B	20	1		M	2,500								20
21														22
23														24
25	HHWP-1	20	3		M	3,048								26
27	--	--	--	--	--		3,048							28
29	--	--	--	--	--			3,048						30
31	HHWP-2	20	3		M	3,048								32
33	--	--	--	--	--		3,048							34
35	--	--	--	--	--			3,048						36
37	AC-1	20	3		M	3,048								38
39	--	--	--	--	--		3,048							40
41	--	--	--	--	--			3,048						42
					TOTAL LOAD:	80342 VA	77842 VA	77842 VA						
					TOTAL AMPS	290 A	281 A	281 A						

LOAD TYPE	LOAD DESCRIPTION	CONNECTED LOAD (VA)	DEMAN D...	ESTIMATED DEMAND (VA)	DEMAND FACTOR NOTES	BKR TYPE	PANEL TOTALS
L	LIGHTING	0 VA	0.00%	0 VA	CONTINUOUS LOAD @ 125%	G = GFCI (5mA)	
R	RECEPTACLES	0 VA	0.00%	0 VA	FIRST 10KVA @ 100%, REMAINDER @ 50%	GP = GFCI (30mA)	CONNECTED LOAD: 236 kVA
K	KITCHEN	0 VA	0.00%	0 VA	NON-DWELLING KITCHEN LOADS, NEC ART. 220	ST = SHUNT TRIP	ESTIMATED DEMAND: 236 kVA
LM	LARGEST MOTOR	0 VA	0.00%	0 VA	LARGEST MOTOR, NEC ART. 430	LO = LOCK OUT	CONNECTED CURRENT: 284 A
M	MOTOR	236026 VA	100.00%	236026 VA			EMD CURRENT: 284 A
C	COOLING	0 VA	0.00%	0 VA			
H	HEATING	0 VA	0.00%	0 VA			
O	OTHER	0 VA	0.00%	0 VA			
Spare	SPARE	0 VA	0.00%	0 VA			

NOTES:

BID/PERMIT SET

CONDITIONAL USE NUMBER: CU2018-0016
DESIGN REVIEW NUMBER: DR2018-0314
SITE DEVELOPMENT PERMIT NUMBER: TBD
BUILDING PERMIT NUMBER: TBD

REGISTERED PROFESSIONAL ENGINEER
86828PE
OREGON
JULY 10, 2012
DANA STEPHENS
EXPIRES: 6/30/2020
3/13/19

PANEL SCHEDULES
ACMA
BEAVERTON SCHOOL DISTRICT

E8.3
74-18109-00
03/14/2019
REVISIONS

DLR Group
Architecture Engineering Planning Interiors

©2019, DLR Group Architecture & Engineering Inc., an Oregon corporation, ALL RIGHTS RESERVED

C:\Revit\74-18109-00_ACMA_MEP_2018_Central_ostephens.rvt
3/13/2019 11:23:50 PM

PANEL: 2B2

LOCATION: ELECTRICAL E200
BUS RATING: 200 A
MAIN BREAKER: 200/3

VOLTS: 208Y / 120
PHASES: 3
WIRES: 4
SCCR: 10000 A

MOUNTING: FLUSH
FED FROM: 2B1
INTEGRAL SPD: Type 1
LUG ACCESSORIES: SEE ONE-LINE

CKT	CIRCUIT DESCRIPTION	BKR TRIP	P	BKR TYPE	LOAD TYPE	PHASE A (VA)		PHASE B (VA)		PHASE C (VA)		LOAD TYPE	BKR TYPE	P	BKR TRIP	CIRCUIT DESCRIPTION	CKT
1	KILN	20	2		M	5,500	600					H		1	20	WH-1	2
3	--	--	--	--	--			5,500	600			H		1	20	WH-3	4
5	KILN	20	2		M					5,500	180	HVAC		1	20	DARK ROOM VENT HOOD	6
7	--	--	--	--	--	5,500	480					M		1	15	EF-E200	8
9	KILN	20	2		M			5,500	0			--		1	20	SPARE	10
11	--	--	--	--	--					5,500	0	--		1	20	SPARE	12
13	CU-E100	25	2		C	1,872	0					--		1	20	SPARE	14
15	--	--	--	--	--			1,872	75			M		1	15	EF-KILN-1B	16
17	BOILER 1	20	3		M					1,573	75	M		1	15	EF-KILN-2B	18
19	--	--	--	--	--	1,573	75					M		1	15	EF-KILN-3B	20
21	--	--	--	--	--			1,573	106			M		1	20	SF-M100	22
23	BOILER 2	20	3		M					1,573	528	M		1	15	EF-00WC	24
25	--	--	--	--	--	1,573	480					M		1	15	EF-100	26
27	--	--	--	--	--			1,573	480			M		1	15	EF-203	28
29	UH-100	20	1		H					100							30
31	EF-KILN-136	20	1		M	75											32
33	CUH-130	15	1		H			204									34
35	EF-00RR	15	1		M					696							36
37	AC-E100	15	1		C	180											38
39	WH-2	20	1		H			600									40
41	WH-4	20	1		H					600							42
					TOTAL LOAD:	17479 VA		17647 VA		15969 VA							
					TOTAL AMPS	148 A		149 A		133 A							

LOAD TYPE	LOAD DESCRIPTION	CONNECTED LOAD (VA)	DEMAN D...	ESTIMATED DEMAND (VA)	DEMAND FACTOR NOTES	BKR TYPE	PANEL TOTALS
L	LIGHTING	0 VA	0.00%	0 VA	CONTINUOUS LOAD @ 125%	G = GFCI (5mA)	
R	RECEPTACLES	0 VA	0.00%	0 VA	FIRST 10KVA @ 100%, REMAINDER @ 50%	GP = GFCI (30mA)	CONNECTED LOAD: 51 kVA
K	KITCHEN	0 VA	0.00%	0 VA	NON-DWELLING KITCHEN LOADS, NEC ART. 220	ST = SHUNT TRIP	ESTIMATED DEMAND: 51 kVA
LM	LARGEST MOTOR	0 VA	0.00%	0 VA	LARGEST MOTOR, NEC ART. 430	LO = LOCK OUT	CONNECTED CURRENT: 142 A
M	MOTOR	44592 VA	100.00%	44592 VA			EMD CURRENT: 142 A
C	COOLING	3924 VA	100.00%	3924 VA			
H	HEATING	2704 VA	100.00%	2704 VA			
O	OTHER	0 VA	0.00%	0 VA			
Spare	SPARE	0 VA	0.00%	0 VA			

NOTES:

PANEL: 2A2-2

LOCATION: ELECTRICAL E200
BUS RATING: 200 A
MAIN BREAKER: 200/3

VOLTS: 208Y / 120
PHASES: 3
WIRES: 4
SCCR: 10000 A

MOUNTING: FLUSH
FED FROM: 2MDP-2
INTEGRAL SPD: Type 1
LUG ACCESSORIES: SEE ONE-LINE

CKT	CIRCUIT DESCRIPTION	BKR TRIP	P	BKR TYPE	LOAD TYPE	A		B		C		LOAD TYPE	BKR TYPE	P	BKR TRIP	CIRCUIT DESCRIPTION	CKT
1	RCPTS - BOYS CHANGING ROOM	20	1		R	540	1,080					R		1	20	RCPTS - CLASSROOM 216	2
3	RCPTS - GIRLS CHANGING ROOM	20	1		R			540	900			R		1	20	RCPTS - CLASSROOM 216	4
5	RCPTS - PHOTO 201	20	1		R					900	1,080	R		1	20	RCPTS - CLASSROOM 214	6
7	RCPTS - PHOTO 201	20	1		R	540	900					R		1	20	RCPTS - CLASSROOM 214	8
9	DED RCPT - PHOTO 201	20	1		R			180	1,080			R		1	20	RCPTS - CLASSROOM 212	10
11	RCPTS - DANCE CORRIDOR	20	1		R					540	900	R		1	20	RCPTS - CLASSROOM 212	12
13	RCPTS - AREA A HALL	20	1		R	720	1,080					R		1	20	RCPTS - CLASSROOM 211	14
15	RCPTS - DANCE RR'S	20	1		R			360	900			R		1	20	RCPTS - CLASSROOM 211	16
17	HAND DRYER - UPPER LEVEL AREA B, RR	20	1		M					1,000	1,080	R		1	20	RCPTS - CLASSROOM 209	18
19	HAND DRYER - UPPER LEVEL AREA B, RR	20	1		M	1,000	900					R		1	20	RCPTS - CLASSROOM 209	20
21	HAND DRYER - UPPER LEVEL AREA B, RR	20	1		M			1,000	1,080			R		1	20	RCPTS - CLASSROOM 207	22
23	HAND DRYER - UPPER LEVEL AREA B, RR	20	1		M					1,000	900	R		1	20	RCPTS - CLASSROOM 207	24
25	BOTTLE FILLER - GALLERY 200	20	1		R	180	900					R		1	20	RCPTS - SPED 205	26
27	RCPTS - DANCE 234	20	1		R			1,080	1,080			R		1	20	RCPTS - SPED 205	28
29	RCPTS - DANCE 234	20	1		R					720	900	R		1	20	RCPTS - SPED 205	30
31	AV RACK - DANCE 234	20	1		R	360	360					R		1	20	RCPTS - OFFICE 205A	32
33	AV RACK - DANCE 236	20	1		R			360	540			R		1	20	RCPTS - OFFICE 205B	34
35	AV RACK - DANCE 238	20	1		R					360	720	R		1	20	RCPTS - DOUBLE OFFICE 205C	36
37	ROOFTOP RECEPTS - SOUTH	20	1		R	360	540					R		1	20	RCPTS - CONFERENCE 205D	38
39									720			R		1	20	RCPTS - DARK RM	40
41											900	R		1	20	RCPTS - DARK RM	42
43							360					R		1	20	RCPT - DANCE OFFICE	44
45									360			R		1	20	RCPT - DANCE OFFICE	46
47											1,000	R		1	20	WASHER - DANCE OFFICE	48
49							1,250					HVAC		2	20	DRYER - DANCE OFFICE	50
51									1,250			--	--	--	--	--	52
53											360	R		1	20	RCPTS - CUSTODIAL, WC UPPER LVL AREA A	54
55							360					R		1	20	RCPTS - EXTENDED LEARNING 210	56
57									360			R		1	20	RCPTS - EXTENDED LEARNING 210	58
59											540	R		1	20	RCPTS - EXTENDED LEARNING 210	60
61							720					R		1	20	RCPTS - RM 210A	62
63																	64
65																	66
67																	68
69																	70
71																	72
73																	74
75																	76
77																	78
					TOTAL LOAD:	12150 VA		11790 VA		12900 VA							
					TOTAL AMPS	102 A		98 A		108 A							

LOAD TYPE	LOAD DESCRIPTION	CONNECTED LOAD (VA)	DEMAN D...	ESTIMATED DEMAND (VA)	DEMAND FACTOR NOTES	BKR TYPE	PANEL TOTALS
L	LIGHTING	0 VA	0.00%	0 VA	CONTINUOUS LOAD @ 125%	G = GFCI (5mA)	
R	RECEPTACLES	30340 VA	66.48%	20170 VA	FIRST 10KVA @ 100%, REMAINDER @ 50%	GP = GFCI (30mA)	CONNECTED LOAD: 37 kVA
K	KITCHEN	0 VA	0.00%	0 VA	NON-DWELLING KITCHEN LOADS, NEC ART. 220	ST = SHUNT TRIP	ESTIMATED DEMAND: 27 kVA
LM	LARGEST MOTOR	0 VA	0.00%	0 VA	LARGEST MOTOR, NEC ART. 430	LO = LOCK OUT	CONNECTED CURRENT: 102 A
M	MOTOR	4000 VA	100.00%	4000 VA			EMD CURRENT: 74 A
C	COOLING	0 VA	0.00%	0 VA			
H	HEATING	0 VA	0.00%	0 VA			
O	OTHER	0 VA	0.00%	0 VA			
Spare	SPARE	0 VA	0.00%	0 VA			

NOTES:

PANEL: 2A2-1

LOCATION: ELECTRICAL E200
BUS RATING: 200 A
MAIN BREAKER: 200/3

VOLTS: 208Y / 120
PHASES: 3
WIRES: 4
SCCR: 10000 A

MOUNTING: FLUSH
FED FROM: 2MDP-2
INTEGRAL SPD: Type 1
LUG ACCESSORIES: SEE ONE-LINE

CKT	CIRCUIT DESCRIPTION	BKR TRIP	P	BKR TYPE	LOAD TYPE	A		B		C		LOAD TYPE	BKR TYPE	P	BKR TRIP	CIRCUIT DESCRIPTION	CKT
1	RCPTS - STORAGE 132,134	20	1		R	720	1,000					R	G	1	20	FRIDGE - BREAKROOM 112	2
3	RCPTS - OFFICE 132B	20	1		R			720	1,000			R	G	1	20	DISHWASHER - BREAKROOM 112	4
5	RCPTS - OFFICE 132C	20	1		R					720	1,000	R	G	1	20	VENDING MACHINE - BREAKROOM 112	6
7	RCPTS - OFFICE 132D	20	1		R	720	1,000					R	G	1	20	VENDING MACHINE - BREAKROOM 112	8
9	RCPTS - CAREER CENTER	20	1		R			900	1,000			R	G	1	20	VENDING MACHINE - BREAKROOM 112	10
11	RCPTS - CAREER CENTER	20	1		R					720	180	R		1	20	RCPT - BREAKROOM 112	12
13	RCPTS - FIRST LEVEL COMMONS RR'S	20	1		R	360	180					R		1	20	RCPT - BREAKROOM 112	14
15	HAND DRYER - COMMONS RR	20	1		M			1,000	180			R		1	20	RCPT - BREAKROOM 112	16
17	HAND DRYER - COMMONS RR	20	1		M					1,000	180	R		1	20	SPLIT FOURPLEX - BREAKROOM 112	18
19	HAND DRYER - COMMONS RR	20	1		M	1,000	180					R		1	20	SPLIT FOURPLEX - BREAKROOM 112	20
21	HAND DRYER - COMMONS RR	20	1		M			1,000	180			R		1	20	SPLIT FOURPLEX - BREAKROOM 112	22
23	RCPTS - KILN RM, MECH M100	20	1		R					540	180	R		1	20	SPLIT FOURPLEX - BREAKROOM 112	24
25	RCPTS - KITCHEN/COMMONS	20	1		R; K	720	360					R		1	20	SPLIT FOURPLEX - BREAKROOM 112	26
27	RCPTS - CONFERENCE 118	20	1		R			540	360			R		1	20	SPLIT FOURPLEX - BREAKROOM 112	28
29	RCPTS - CONFERENCE 118	20	1		R					720	360	R		1	20	SPLIT FOURPLEX - BREAKROOM 112	30
31	RCPTS - RMS 103	20	1		R	540	360					R		1	20	SPLIT FOURPLEX - BREAKROOM 112	32
33	RCPTS - RM 103A	20	1		R			360	180			R		1	20	COUNTER SPLIT 4PLEX - BREAKROOM 112	34
35	COPIER - WORKROOM	20	1		O					500	180	R		1	20	COUNTER SPLIT 4PLEX - BREAKROOM 112	36
37	COPIER - WORKROOM	20	1		O	500	180					R		1	20	COUNTER SPLIT 4PLEX - BREAKROOM 112	38
39	RCPTS - WORKROOM	20	1		R			720	180			R		1	20	COUNTER SPLIT 4PLEX - BREAKROOM 112	40
41	RCPTS - RR'S, STORAGE, CUSTODIAL	20	1		R; M					953	900	R		1	20	RCPTS - OFFICE 110	42
43	RCPTS - RECEPTION 102	20	1		R	540	540					R		1	20	RCPTS - RM 106	44
45	UC FRIDGE - HEALTH 105	20	1		R			500	360			R		1	20	RCPTS - CONFERENCE 104	46
47	RCPTS - HEALTH 105	20	1		R					360	540	R		1	20	RCPTS - CONFERENCE 104	48
49	ADA PUSH BUTTON - EAST VEST	20	1		M	180											50
51	RCPTS - ADMIN CORRIDOR	20	1		R			720									52
53	DCP - SCIENCE CORRIDOR EXTR DR	20	1		M					180							54
55	FIRE/SMOKE DAMPERS - STORAGE 103A	20	1		--	0											56
57	FIRE/SMOKE DAMPERS - MECH SHAFT	20	1		--			0									58
59																	60
61																	62
63																	64
65																	66
67																	68
69																	70
71																	72
73																	74
75																	76
77																	78
					TOTAL LOAD:	9080 VA		9900 VA		9207 VA							
					TOTAL AMPS	76 A		83 A		77 A							

LOAD TYPE	LOAD DESCRIPTION	CONNECTED LOAD (VA)	DEMAN D...	ESTIMATED DEMAND (VA)	DEMAND FACTOR NOTES	BKR TYPE	PANEL TOTALS
L	LIGHTING	0 VA	0.00%	0 VA	CONTINUOUS LOAD @ 125%	G = GFCI (5mA)	
R	RECEPTACLES	22240 VA	72.48%	16120 VA	FIRST 10KVA @ 100%, REMAINDER @ 50%	GP = GFCI (30mA)	CONNECTED LOAD: 28 kVA
K	KITCHEN	360 VA	100.00%	360 VA	NON-DWELLING KITCHEN LOADS, NEC ART. 220	ST = SHUNT TRIP	ESTIMATED DEMAND: 22 kVA
LM	LARGEST MOTOR	0 VA	0.00%	0 VA	LARGEST MOTOR, NEC ART. 430	LO = LOCK OUT	CONNECTED CURRENT: 78 A
M	MOTOR	4588 VA	100.00%	4588 VA			EMD CURRENT: 61 A
C	COOLING	0 VA	0.00%	0 VA			
H	HEATING	0 VA	0.00%	0 VA			
O	OTHER	1000 VA	100.00%	1000 VA			
Spare	SPARE	0 VA	0.00%	0 VA			

NOTES:

PANEL: 2B3

LOCATION: ELECTRICAL E102
BUS RATING: 100 A
MAIN BREAKER: 100/3

VOLTS: 208Y / 120
PHASES: 3
WIRES: 4
SCCR: 10000 A

MOUNTING: FLUSH
FED FROM: 2B1
INTEGRAL SPD: Type 1
LUG ACCESSORIES: SEE ONE-LINE

CKT	CIRCUIT DESCRIPTION	BKR TRIP	P	BKR TYPE	LOAD TYPE	PHASE A (VA)		PHASE B (VA)		PHASE C (VA)		LOAD TYPE	BKR TYPE	P	BKR TRIP	CIRCUIT DESCRIPTION	CKT
1	CF-1	15	2		M	1,040	180					C		1	15	AC-E102	2
3	--	--	--	--	--			1,040	252			M		1	15	CP-4	4
5	CF-2	15	2		M					1,040							6
7	--	--	--	--	--	1,040											8
9	CU-E201	25	2		C			1,872									10
11	--	--	--	--	--					1,872							12
13	EF-149A	15	1		M	864											14
15	EF-145	25	1		M			1,656									16
17	EF-147	25	1		M					1,656							18
19	EF-147A AND EF-01RR	20	1		M	1,872											20
21	AC-E201	15	1		C			180									22
23	CP-2	15	1		M					252							24
25	CP-3	15	1		M	252											26
27	CP-6	15	1		M			252									28
29	CP-5	15	1		M					252							30
31	WH-5	20	1		H	600											32
33	WH-6	20	1		H			600									34
35	EF-R3	15	1		M					696							36
37	EF-R4	15	1		M	696											38
39	CU-E102	25	2		C			1,872									40
41	--	--	--	--	--					1,872							42
					TOTAL LOAD:	6544 VA		7724 VA		7640 VA							
					TOTAL AMPS	55 A		66 A		65 A							

LOAD TYPE	LOAD DESCRIPTION	CONNECTED LOAD (VA)	DEMAN D...	ESTIMATED DEMAND (VA)	DEMAND FACTOR NOTES	BKR TYPE	PANEL TOTALS
L	LIGHTING	0 VA	0.00%	0 VA	CONTINUOUS LOAD @ 125%	G = GFCI (5mA)	
R	RECEPTACLES	0 VA	0.00%	0 VA	FIRST 10KVA @ 100%, REMAINDER @ 50%	GP = GFCI (30mA)	CONNECTED LOAD: 22 kVA
K	KITCHEN	0 VA	0.00%	0 VA	NON-DWELLING KITCHEN LOADS, NEC ART. 220	ST = SHUNT TRIP	ESTIMATED DEMAND: 22 kVA
LM	LARGEST MOTOR	0 VA	0.00%	0 VA	LARGEST MOTOR, NEC ART. 430	LO = LOCK OUT	CONNECTED CURRENT: 61 A
M	MOTOR	12860 VA	100.00%	12860 VA			EMD CURRENT: 61 A
C	COOLING	7848 VA	100.00%	7848 VA			
H	HEATING	1200 VA	100.00%	1200 VA			
O	OTHER	0 VA	0.00%	0 VA			
Spare	SPARE	0 VA	0.00%	0 VA			

NOTES:

BID/PERMIT SET

CONDITIONAL USE NUMBER: CU2018-0016
DESIGN REVIEW NUMBER: DR2018-0314
SITE DEVELOPMENT PERMIT NUMBER: TBD
BUILDING PERMIT NUMBER: TBD

REGISTERED PROFESSIONAL ENGINEER
86828PE
OREGON
JULY 10, 2012
OANA STEPHENS
EXPIRES: 6/30/2020

PANEL SCHEDULES

ACMA
BEAVERTON SCHOOL DISTRICT

E8.4
74-18109-00
03/14/2019
REVISIONS

DLR Group
Architecture Engineering Planning Interiors

© 2019, DLR Group Architecture & Engineering Inc., an Oregon corporation, ALL RIGHTS RESERVED

C:\Revit\74-18109-00_ACMA_MEP_2018_Central_ostephens.rvt
3/13/2019 11:23:57 PM

PANEL: 2A3-1

LOCATION: ELECTRICAL E102
BUS RATING: 200 A
MAIN BREAKER: 200/3

VOLTS: 208Y / 120
PHASES: 3
WIRES: 4
SCCR: 10000 A

MOUNTING: FLUSH
FED FROM: 2MDP-2
INTEGRAL SPD: Type 1
LUG ACCESSORIES: SEE ONE-LINE

CKT	CIRCUIT DESCRIPTION	BKR TRIP	P	BKR TYPE	LOAD TYPE	A		B		C		LOAD TYPE	BKR TYPE	P	BKR TRIP	CIRCUIT DESCRIPTION	CKT
1	RCPTS - SCIENCE 147	20	1		R	720	540					R		1	20	RCPTS - SCIENCE PREP	2
3	RCPTS - SCIENCE 147	20	1		R			720	500			R		1	20	ICE MACHINE - SCIENCE RCPT	4
5	RCPTS - SCIENCE 147	20	1		R					900	1,200	R		1	20	DISHWASHER - SCIENCE PREP	6
7	RCPTS - SCIENCE 145	20	1		R	720	1,000					R		1	20	FRIDGE - SCIENCE PREP	8
9	RCPTS - SCIENCE 145	20	1		R			720	720			R		1	20	RCPTS - SCIENCE CORRIDOR	10
11	RCPTS - SCIENCE 145	20	1		R					900	540	R		1	20	RCPTS - SCIENCE RR'S	12
13	RCPTS - DESIGN STUDIO	20	1		R	1,080	1,000					M		1	20	HAND DRYER - SCIENCE RR	14
15	RCPTS - DESIGN STUDIO	20	1		R			900	1,000			M		1	20	HAND DRYER - SCIENCE RR	16
17	RCPTS - DESIGN STUDIO	20	1		R					900	1,000	M		1	20	HAND DRYER - SCIENCE RR	18
19	CLG RCPTS - DESIGN STUDIO	20	1		R	540	1,000					M		1	20	HAND DRYER - SCIENCE RR	20
21	CLG RCPTS - DESIGN STUDIO	20	1		R			540	900			R		1	20	RCPTS - 2D ART 138	22
23	RCPTS - SCIENCE 146	20	1		R					900	1,080	R		1	20	RCPTS - 2D ART 138	24
25	RCPTS - SCIENCE 146	20	1		R	1,080	900					R		1	20	RCPTS - 3D ART 136	26
27	CLG RCPTS - SCIENCE 146	20	1		R			360	900			R		1	20	RCPTS - 3D ART 136	28
29	CLG RCPTS - SCIENCE 146	20	1		R					360	720	R		1	20	POTTERY WHEELS - 3D ART 136	30
31	RCPTS - SCIENCE 144	20	1		R	900	540					R		1	20	POTTERY WHEELS - 3D ART 136	32
33	RCPTS - SCIENCE 144	20	1		R			1,080	540			R		1	20	POTTERY WHEELS - 3D ART 136	34
35	CLG RCPTS - SCIENCE 144	20	1		R					360	360	R		1	20	RCPTS - COMMONS PLATFORM	36
37	CLG RCPTS - SCIENCE 144	20	1		R	360	360					R		1	20	RCPTS - COMMONS PLATFORM	38
39	RCPTS - TEACHER PLANNING 142	20	1		R			900	360			R		1	20	RCPTS - COMMONS PLATFORM	40
41	RCPTS - TEACHER PLANNING 142	20	1		R					1,080	360	R		1	20	RCPTS - COMMONS PLATFORM	42
43	Receptacle	20	1		R	360	0					--		1	20	FIRE/SMOKE DAMPERS - MECH SHAFT	44
45	COMMONS CORRIDOR - RCPTS	20	1		R			720	180			R		1	20	RCPTS - DESIGN STUDIO	46
47	PLUGBOXES - COMMONS	20	1		L					500	180	R		1	20	RCPTS - DESIGN STUDIO	48
49	PLUGBOXES - COMMONS	20	1		L	500	540					M		1	20	M SCIENCE (CHEM) 147	50
51	PLUGBOXES - COMMONS	20	1		L			500	360			M		1	20	M Space 331	52
53	PLUGBOXES - COMMONS	20	1		L					500							54
55	PLUGBOXES - COMMONS	20	1		L	500											56
57	PLUGBOXES - COMMONS	20	1		L			500									58
59	PLUGBOXES - COMMONS	20	1		L					500							60
61	RCPTS - COMMONS PLATFORM	20	1		R	360											62
63	RCPTS - COMMONS PLATFORM	20	1		R			360									64
65	SPACE ONLY	--	--	--	--					0							66
67	SPACE ONLY	--	--	--	--	0											68
69	SPACE ONLY	--	--	--	--			0									70
71	SPACE ONLY	--	--	--	--					0							72
73	SPACE ONLY	--	--	--	--	0											74
75	SPACE ONLY	--	--	--	--			0									76
77	SPACE ONLY	--	--	--	--					0							78
					TOTAL LOAD:	13000 VA		12760 VA		12340 VA							
					TOTAL AMPS	109 A		107 A		103 A							

LOAD TYPE	LOAD DESCRIPTION	CONNECTED LOAD (VA)	DEMAN D...	ESTIMATED DEMAND (VA)	DEMAND FACTOR NOTES	BKR TYPE	PANEL TOTALS
L	LIGHTING	3500 VA	125.00%	4375 VA	CONTINUOUS LOAD @ 125%	G = GFCI (5mA)	
R	RECEPTACLES	29700 VA	66.84%	19850 VA	FIRST 10KVA @ 100%, REMAINDER @ 50%	GP = GFCI (30mA)	CONNECTED LOAD: 38 kVA
K	KITCHEN	0 VA	0.00%	0 VA	NON-DWELLING KITCHEN LOADS, NEC ART. 220	ST = SHUNT TRIP	ESTIMATED DEMAND: 29 kVA
LM	LARGEST MOTOR	0 VA	0.00%	0 VA	LARGEST MOTOR, NEC ART. 430	LO = LOCK OUT	CONNECTED CURRENT: 106 A
M	MOTOR	4900 VA	100.00%	4900 VA			EMD CURRENT: 81 A
C	COOLING	0 VA	0.00%	0 VA			
H	HEATING	0 VA	0.00%	0 VA			
O	OTHER	0 VA	0.00%	0 VA			
Spare	SPARE	0 VA	0.00%	0 VA			

NOTES:

PANEL: 2A3-2

LOCATION: ELECTRICAL E102
BUS RATING: 200 A
MAIN BREAKER: 200/3

VOLTS: 208Y / 120
PHASES: 3
WIRES: 4
SCCR: 10000 A

MOUNTING: FLUSH
FED FROM: 2MDP-2
INTEGRAL SPD: Type 1
LUG ACCESSORIES: SEE ONE-LINE

CKT	CIRCUIT DESCRIPTION	BKR TRIP	P	BKR TYPE	LOAD TYPE	A		B		C		LOAD TYPE	BKR TYPE	P	BKR TRIP	CIRCUIT DESCRIPTION	CKT
1	RCPTS - CLASSROOM 246	20	1		R	900	1,080					R		1	20	RCPTS - DANCE 238	2
3	RCPTS - CLASSROOM 246	20	1		R			1,080	720			R		1	20	RCPTS - DANCE 238	4
5	RCPTS - CLASSROOM 244	20	1		R					1,080	1,080	R		1	20	RCPTS - DANCE 236	6
7	RCPTS - CLASSROOM 244	20	1		R	900	720					R		1	20	RCPTS - DANCE 236	8
9	RCPTS - CLASSROOM 242	20	1		R			1,080	0			--		1	20	SPARE	10
11	RCPTS - CLASSROOM 242	20	1		R					900	0	--		1	20	SPARE	12
13	RCPTS - CLASSROOM 247	20	1		R	1,080	500					L		1	20	PLUGBOXES - DANCE 238	14
15	RCPTS - CLASSROOM 247	20	1		R			900	500			L		1	20	PLUGBOXES - DANCE 238	16
17	RCPTS - CLASSROOM 245	20	1		R					1,080	500	L		1	20	PLUGBOXES - DANCE 238	18
19	RCPTS - CLASSROOM 245	20	1		R	900	500					L		1	20	PLUGBOXES - DANCE 236	20
21	RCPTS - CLASSROOM 243	20	1		R			1,080	500			L		1	20	PLUGBOXES - DANCE 236	22
23	RCPTS - CLASSROOM 243	20	1		R					900	500	L		1	20	PLUGBOXES - DANCE 236	24
25	RCPTS - RM 249,250	20	1		R	900	500					L		1	20	PLUGBOXES - DANCE 234	26
27	RCPTS - RM 249	20	1		R			720	500			L		1	20	PLUGBOXES - DANCE 234	28
29	RCPTS - RM 249	20	1		R					720	500	L		1	20	PLUGBOXES - DANCE 234	30
31	COPIER - RM 249	20	1		O	500	500					L		1	20	PLUGBOXES - COMMONS	32
33	RCPTS - RM 250	20	1		R			1,080	500			L		1	20	PLUGBOXES - COMMONS	34
35	RCPTS - CORRIDOR 251, RESTROOM	20	1		R					540	500	L		1	20	PLUGBOXES - COMMONS	36
37	RCPTS - CORRIDOR 251	20	1		R	900	360					R		1	20	ROOFTOP RECEPTS - NORTH	38
39	HAND DRYER - UPPER LEVEL AREA C, RR	20	1		M			1,000									40
41	HAND DRYER - UPPER LEVEL AREA C, RR	20	1		M					1,000							42
43	HAND DRYER - UPPER LEVEL AREA C, RR	20	1		M	1,000											44
45	HAND DRYER - UPPER LEVEL AREA C, RR	20	1		M			1,000									46
47	PLUGBOXES - COMMONS	20	1		L					500							48
49	COMMONS PROJECTOR	20	1		R	180											50
51																	52
53																	54
55																	56
57																	58
59																	60
61																	62
63																	64
65																	66
67																	68
69																	70
71																	72
73																	74
75																	76
77																	78
					TOTAL LOAD:	11420 VA		10660 VA		9800 VA							
					TOTAL AMPS	96 A		90 A		82 A							

LOAD TYPE	LOAD DESCRIPTION	CONNECTED LOAD (VA)	DEMAN D...	ESTIMATED DEMAND (VA)	DEMAND FACTOR NOTES	BKR TYPE	PANEL TOTALS
L	LIGHTING	6500 VA	125.00%	8125 VA	CONTINUOUS LOAD @ 125%	G = GFCI (5mA)	
R	RECEPTACLES	20880 VA	73.95%	15440 VA	FIRST 10KVA @ 100%, REMAINDER @ 50%	GP = GFCI (30mA)	CONNECTED LOAD: 32 kVA
K	KITCHEN	0 VA	0.00%	0 VA	NON-DWELLING KITCHEN LOADS, NEC ART. 220	ST = SHUNT TRIP	ESTIMATED DEMAND: 28 kVA
LM	LARGEST MOTOR	0 VA	0.00%	0 VA	LARGEST MOTOR, NEC ART. 430	LO = LOCK OUT	CONNECTED CURRENT: 88 A
M	MOTOR	4000 VA	100.00%	4000 VA			EMD CURRENT: 78 A
C	COOLING	0 VA	0.00%	0 VA			
H	HEATING	0 VA	0.00%	0 VA			
O	OTHER	500 VA	100.00%	500 VA			
Spare	SPARE	0 VA	0.00%	0 VA			

NOTES:

BID/PERMIT SET

CONDITIONAL USE NUMBER: CU2018-0016
DESIGN REVIEW NUMBER: DR2018-0314
SITE DEVELOPMENT PERMIT NUMBER: TBD
BUILDING PERMIT NUMBER: TBD

REGISTERED PROFESSIONAL ENGINEER
86828PE
OREGON
JULY 10, 2012
CANA STEPHENS
EXPIRES: 6/30/2020
03/14/19

PANEL SCHEDULES
ACMA
BEAVERTON SCHOOL DISTRICT

E8.5
74-18109-00
03/14/2019
REVISIONS

DLR Group
Architecture Engineering Planning Interiors

©2019, DLR Group Architecture & Engineering Inc., an Oregon corporation, ALL RIGHTS RESERVED

C:\Revit\74-18109-00_ACMA_MEP_2018_Central_cstephens.rvt
3/13/2019 11:24:05 PM

PANEL: 4LS1

LOCATION:
BUS RATING: 100 A
MAIN BREAKER: 100/3

VOLTS: 480Y / 277
PHASES: 3
WIRES: 4
SCCR: 18000 A

MOUNTING: SURFACE
FED FROM: 4MDP
INTEGRAL SPD: Type 1
LUG ACCESSORIES: SEE ONE-LINE

CKT	CIRCUIT DESCRIPTION	BKR TRIP	P	BKR TYPE	LOAD TYPE	PHASE A (VA)		PHASE B (VA)		PHASE C (VA)		LOAD TYPE	BKR TYPE	P	BKR TRIP	CIRCUIT DESCRIPTION	CKT
1	EGRESS LTG - LOWER LEVEL AREA A	20	1		Other;...	1,745											2
3	EGRESS LTG - LOWER LEVEL AREA C	20	1		Other; L			937									4
5	EGRESS LTG - UPPER LEVEL AREA A	20	1		Other; L					479							6
7	EGRESS LTG - UPPER LEVEL AREA B	20	1		Lightin...	1,212											8
9	EGRESS LTG - UPPER LEVEL AREA C	20	1		Other; L			99									10
11	BLDG EXT LTG - EMERGENCY	20	1		Lighting					234							12
13																	14
15																	16
17																	18
19																	20
21																	22
23																	24
25																	26
27																	28
29																	30
31																	32
33																	34
35																	36
37																	38
39																	40
41																	42
					TOTAL LOAD:	2947 VA		1034 VA		709 VA							
					TOTAL AMPS	11 A		4 A		3 A							

LOAD TYPE	LOAD DESCRIPTION	CONNECTED LOAD (VA)	DEMAN D...	ESTIMATED DEMAND (VA)	DEMAND FACTOR NOTES	BKR TYPE	PANEL TOTALS
L	LIGHTING	3713 VA	125.00%	4641 VA	CONTINUOUS LOAD @ 125%	G = GFCI (5mA)	
R	RECEPTACLES	0 VA	0.00%	0 VA	FIRST 10KVA @ 100%, REMAINDER @ 50%	GP = GFCI (30mA)	CONNECTED LOAD: 5 kVA
K	KITCHEN	0 VA	0.00%	0 VA	NON-DWELLING KITCHEN LOADS, NEC ART. 220	ST = SHUNT TRIP	ESTIMATED DEMAND: 6 kVA
LM	LARGEST MOTOR	0 VA	0.00%	0 VA	LARGEST MOTOR, NEC ART. 430	LO = LOCK OUT	CONNECTED CURRENT: 6 A
M	MOTOR	0 VA	0.00%	0 VA			EMD CURRENT: 7 A
C	COOLING	0 VA	0.00%	0 VA			
H	HEATING	0 VA	0.00%	0 VA			
O	OTHER	0 VA	0.00%	0 VA			
Spare	SPARE	0 VA	0.00%	0 VA			

NOTES:

PANEL: 4SB1

LOCATION: ELECTRICAL E101
BUS RATING: 200 A
MAIN BREAKER: 200/3

VOLTS: 480Y / 277
PHASES: 3
WIRES: 4
SCCR: 18000 A

MOUNTING: SURFACE
FED FROM: 4MDP
INTEGRAL SPD: Type 1
LUG ACCESSORIES: SEE ONE-LINE

CKT	CIRCUIT DESCRIPTION	BKR TRIP	P	BKR TYPE	LOAD TYPE	PHASE A (VA)		PHASE B (VA)		PHASE C (VA)		LOAD TYPE	BKR TYPE	P	BKR TRIP	CIRCUIT DESCRIPTION	CKT
1	2SB1 VIA XFMR-T1	100	3		R;...	10,986											2
3	--	--	--	--	--			9,344									4
5	--	--	--	--	--					8,245							6
7	ELEVATOR	70	3		LM	9,422											8
9	--	--	--	--	--			9,422									10
11	--	--	--	--	--					9,422							12
13	EMERGENCY LTG - RMS 113, 115	20	1		L	238											14
15	EMERGENCY LTG - RMS 142,144,146, RR'S...	20	1		L			261									16
17	EMERGENCY LTG - UPPER CLASSROOMS...	20	1		L					552							18
19	EMERGENCY LIGHTING - UPPER LEVEL ARE...	20	1		L	626											20
21																	22
23																	24
25																	26
27																	28
29																	30
31																	32
33																	34
35																	36
37																	38
39																	40
41																	42
					TOTAL LOAD:	21243 VA		19019 VA		18192 VA							
					TOTAL AMPS	77 A		69 A		66 A							

LOAD TYPE	LOAD DESCRIPTION	CONNECTED LOAD (VA)	DEMAN D...	ESTIMATED DEMAND (VA)	DEMAND FACTOR NOTES	BKR TYPE	PANEL TOTALS
L	LIGHTING	1672 VA	125.00%	2091 VA	CONTINUOUS LOAD @ 125%	G = GFCI (5mA)	
R	RECEPTACLES	5760 VA	100.00%	5760 VA	FIRST 10KVA @ 100%, REMAINDER @ 50%	GP = GFCI (30mA)	CONNECTED LOAD: 58 kVA
K	KITCHEN	0 VA	0.00%	0 VA	NON-DWELLING KITCHEN LOADS, NEC ART. 220	ST = SHUNT TRIP	ESTIMATED DEMAND: 66 kVA
LM	LARGEST MOTOR	28266 VA	125.00%	35333 VA	LARGEST MOTOR, NEC ART. 430	LO = LOCK OUT	CONNECTED CURRENT: 70 A
M	MOTOR	0 VA	0.00%	0 VA			EMD CURRENT: 79 A
C	COOLING	0 VA	0.00%	0 VA			
H	HEATING	0 VA	0.00%	0 VA			
O	OTHER	0 VA	0.00%	0 VA			
Spare	SPARE	22095 VA	100.00%	22095 VA			

NOTES:

PANEL: 2SB1

LOCATION: Space 329
BUS RATING: 225 A
MAIN BREAKER: 225/3

VOLTS: 208Y / 120
PHASES: 3
WIRES: 4
SCCR: 10000 A

MOUNTING: FLUSH
FED FROM: XFMR-T1
INTEGRAL SPD: Type 1
LUG ACCESSORIES: SEE ONE-LINE

CKT	CIRCUIT DESCRIPTION	BKR TRIP	P	BKR TYPE	LOAD TYPE	PHASE A (VA)		PHASE B (VA)		PHASE C (VA)		LOAD TYPE	BKR TYPE	P	BKR TRIP	CIRCUIT DESCRIPTION	CKT
1	PANEL 2E (EXISTING) AND PANEL CBE...	100	3			8,106	900					R		1	20	RCPTS - PRINCIPAL 108	2
3	--	--	--	--	--			7,364	540			R		1	20	RCPTS - RECEPTION 102	4
5	--	--	--	--	--					6,625	360	R		1	20	RCPT - IDF E201	6
7							360					R		1	20	RCPT - IDF E201	8
9									360			R		1	20	RCPT - IDF E201	10
11											360	R		1	20	RCPT - IDF E201	12
13	MDF E100 - RCPT	20	1		R	360											14
15	MDF E100 - RCPT	20	1		R			180									16
17	MDF E100 - RCPT	20	1		R					180							18
19	MDF E100 - RCPT	20	1		R	360											20
21	MDF E100 - RCPT	20	1		R			360									22
23	MDF E100 - RCPT	20	1		R					360							24
25	MDF E100 - RCPT	20	1		R	180											26
27	MDF E100 - RCPT	20	1		R			180									28
29	MDF E100 - RCPT	20	1		R					180							30
31	RCPT - EMERGENCY ELEC RM	20	1		R;...	540											32
33	RCPT - ELECTRICAL E200	20	1		Recept...			180									34
35	RCPT - ELECTRICAL E102	20	1		Recept...					180							36
37	ELEVATOR PIT RECEPT	20	1		R	180											38
39	ELEVATOR PIT RECEPT	20	1		R			180									40
41																	42
					TOTAL LOAD:	10986 VA		9344 VA		8245 VA							
					TOTAL AMPS	93 A		79 A		69 A							

LOAD TYPE	LOAD DESCRIPTION	CONNECTED LOAD (VA)	DEMAN D...	ESTIMATED DEMAND (VA)	DEMAND FACTOR NOTES	BKR TYPE	PANEL TOTALS
L	LIGHTING	0 VA	0.00%	0 VA	CONTINUOUS LOAD @ 125%	G = GFCI (5mA)	
R	RECEPTACLES	5760 VA	100.00%	5760 VA	FIRST 10KVA @ 100%, REMAINDER @ 50%	GP = GFCI (30mA)	CONNECTED LOAD: 29 kVA
K	KITCHEN	0 VA	0.00%	0 VA	NON-DWELLING KITCHEN LOADS, NEC ART. 220	ST = SHUNT TRIP	ESTIMATED DEMAND: 29 kVA
LM	LARGEST MOTOR	0 VA	0.00%	0 VA	LARGEST MOTOR, NEC ART. 430	LO = LOCK OUT	CONNECTED CURRENT: 79 A
M	MOTOR	0 VA	0.00%	0 VA			EMD CURRENT: 79 A
C	COOLING	0 VA	0.00%	0 VA			
H	HEATING	0 VA	0.00%	0 VA			
O	OTHER	0 VA	0.00%	0 VA			
Spare	SPARE	22095 VA	100.00%	22095 VA			

NOTES:

BID/PERMIT SET

CONDITIONAL USE NUMBER: CU2018-0016
DESIGN REVIEW NUMBER: DR2018-0114
SITE DEVELOPMENT PERMIT NUMBER: TBD
BUILDING PERMIT NUMBER: TBD

REGISTERED PROFESSIONAL ENGINEER
86828PE
OREGON
JULY 10, 2012
CHNA STEPHENS
EXPIRES: 6/30/2020

PANEL SCHEDULES
ACMA
BEAVERTON SCHOOL DISTRICT

E8.6
74-18109-00
03/14/2019
REVISIONS

DLR Group
Architecture Engineering Planning Interiors

© 2019 DLR Group Architecture & Engineering Inc., an Oregon corporation, ALL RIGHTS RESERVED

C:\Revit\74-18109-00_ACMA_MEP_2018_Central_cstephens.rvt
3/13/2019 11:24:11 PM

LEGEND NOTES

LEGEND NOTES ARE COMMON TO ALL
SOME NOTES MAY NOT APPLY TO THIS SHEET

Site Lighting Fixture Schedule								
Type	Manufacturer	Model	Lamp	Electrical Data	Ballast(s)	Type Comments	Mounting	Description
ESL1	PHILIPS GARDCO	ECF-S-32L-1A-NW-G2-AR-SW-UNV	4000K LED	277 V/1-106 VA	0-10V DIMMING DRIVER	EXTERIOR SINGLE HEAD SITE	STANDARD ARM - SINGLE HEAD	SINGLE HEAD PARKING POLE LIGHT FIXTURE WITH TYPE 5 WIDE DISTRIBUTION ON 20' POLE. 13030 NOMINAL LUMENS.
ESL1-2	PHILIPS GARDCO	ECF-S-32L-1A-NW-G2-AR-SW-UNV	4000K LED	277 V/1-212 VA	0-10V DIMMING DRIVER	EXTERIOR DOUBLE HEAD	STANDARD ARM - DOUBLE HEAD	SIMILAR TO TYPE ESL1 EXCEPT (2) FIXTURES MOUNTED 90 DEGREES FROM EACH OTHER ON A 20' SINGLE POLE.
ESL2	PHILIPS GARDCO	ECF-S-32L-1A-NW-G2-AR-2-UNV	4000K LED	277 V/1-106 VA	0-10V DIMMING DRIVER	EXTERIOR SINGLE HEAD SITE	STANDARD ARM - SINGLE HEAD	SINGLE HEAD PARKING POLE LIGHT FIXTURE WITH TYPE 2 DISTRIBUTION ON 20' POLE. 12464 NOMINAL LUMENS.

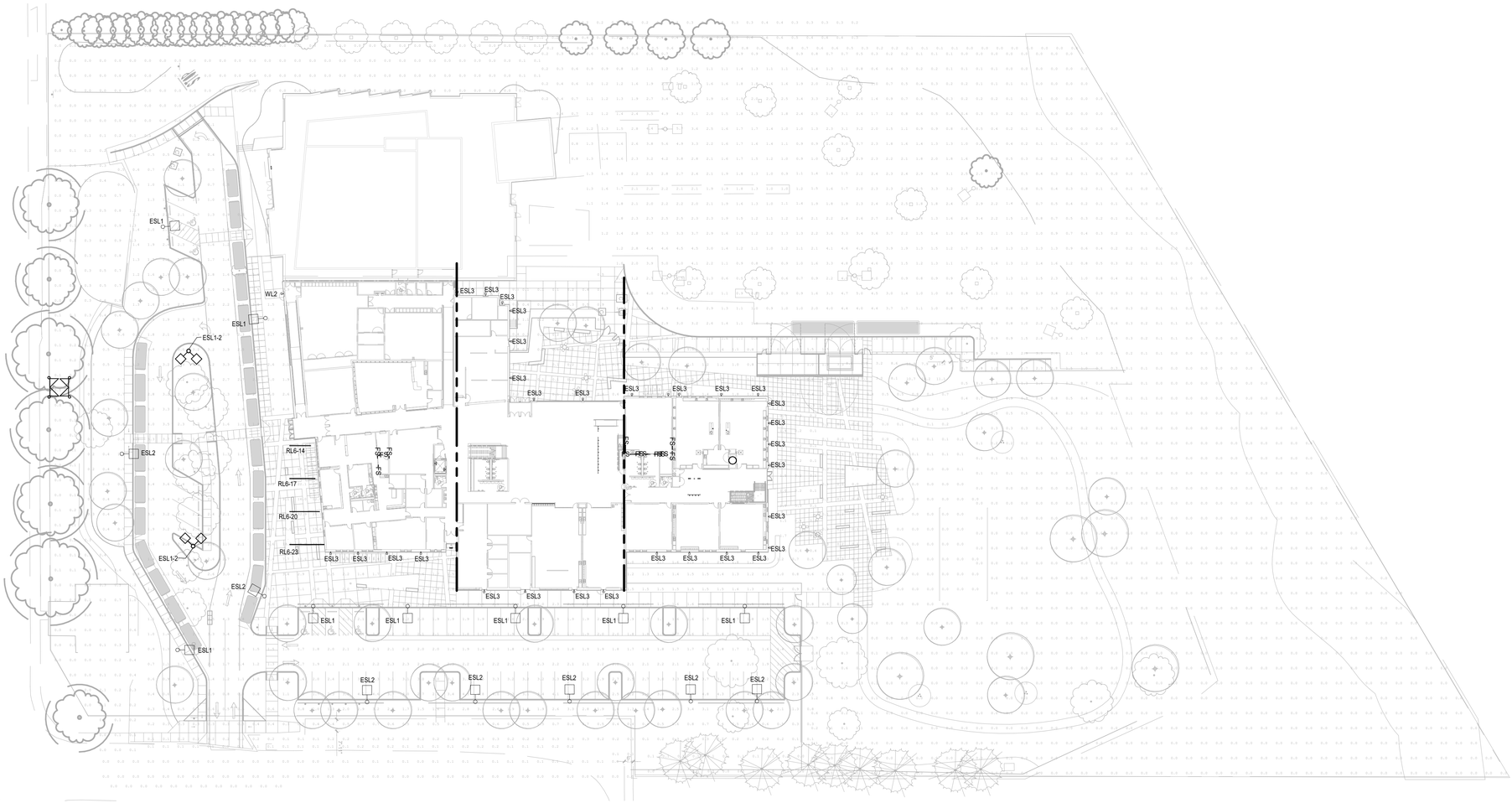

NORTH

ELECTRICAL SITE PLAN PHOTOMETRICS PLAN

SCALE: 1" = 40'-0"

BID/PERMIT SET

CONDITIONAL USE NUMBER: CU2018-0016
DESIGN REVIEW NUMBER: DR2018-0114
SITE DEVELOPMENT PERMIT NUMBER: TBD
BUILDING PERMIT NUMBER: TBD

REGISTERED PROFESSIONAL ENGINEER
86828PE
OREGON
JULY 10, 2012
CHINA STEPHENS
EXPIRES: 6/30/2020
03/13/19

SITE LIGHTING PHOTOMETRIC PLAN
ACMA
BEAVERTON SCHOOL DISTRICT

E9.0
74-18109-00
03/14/2019
REVISIONS

DLR Group
Architecture Engineering Planning Interiors

© 2019, DLR Group Architecture & Engineering Inc., an Oregon corporation, ALL RIGHTS RESERVED

C:\Revit\74-18109-00_ACMA_MEP_2018_Central_p_raghu.rvt
3/13/2019 4:47:04 PM

NORTH

SCALE: 1/16" = 1'-0"

LIGHTING PHOTOMETRIC PLAN - LEVEL 1

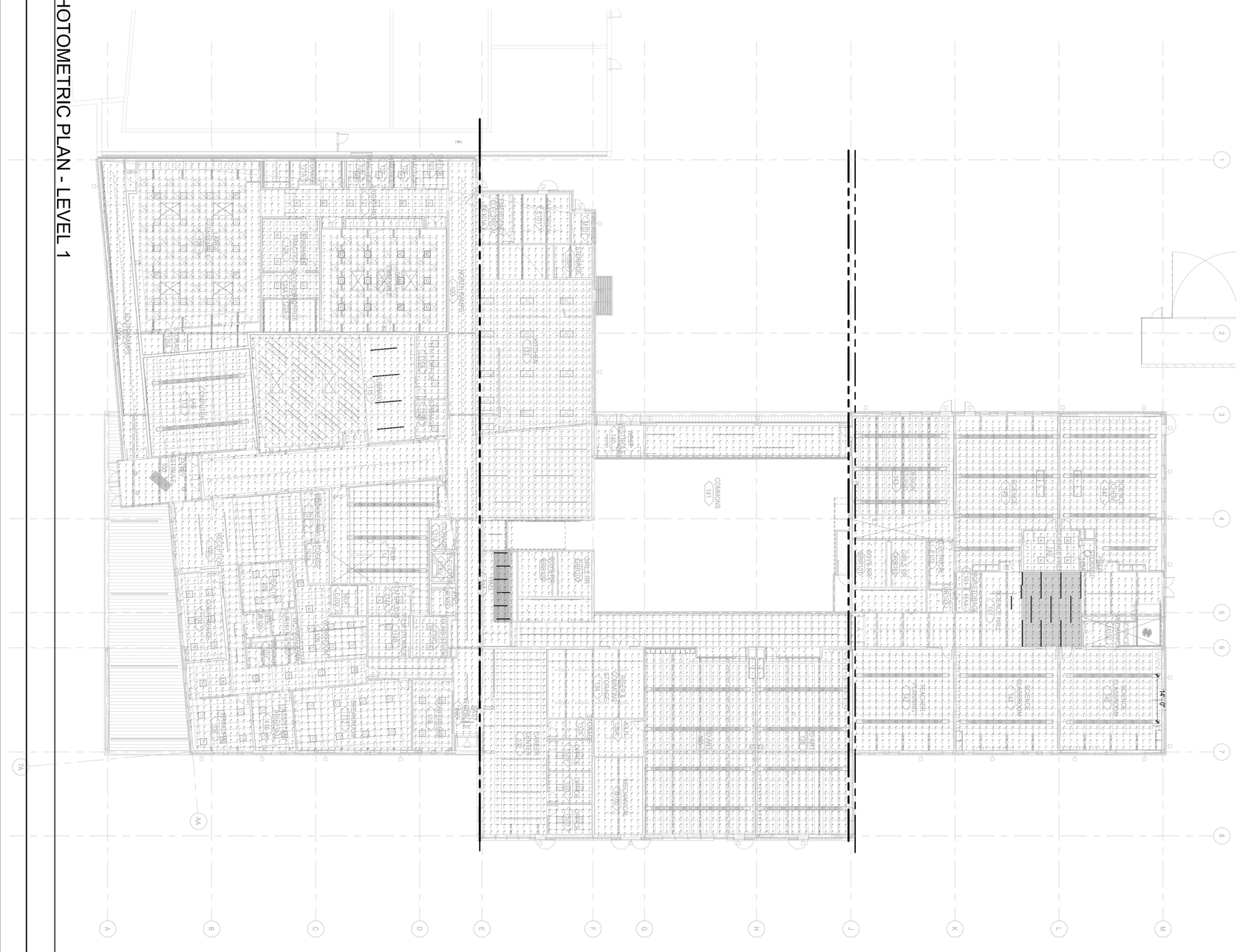

DLR Group
Architecture Engineering Planning Interiors

E9.1
74-18109-00
03/14/2019
REVISIONS

LIGHTING PHOTOMETRIC PLAN - LEVEL 1
ACMA
BEAVERTON SCHOOL DISTRICT

REGISTERED PROFESSIONAL ENGINEER
OREGON
JULY 10, 2012
DAN STEPHENS
EXPIRES: 6/30/2019

BID/PERMIT SET

CONDITIONAL USE NUMBER: CU2018-0016
DESIGN REVIEW NUMBER: DR2018-0114
SITE DEVELOPMENT PERMIT NUMBER: TBD
BUILDING PERMIT NUMBER: TBD

©2019, DLR Group Architecture & Engineering inc., an Oregon corporation, ALL RIGHTS RESERVED

NORTH

SCALE: 1/16" = 1'-0"

LIGHTING PHOTOMETRIC PLAN - LEVEL 2

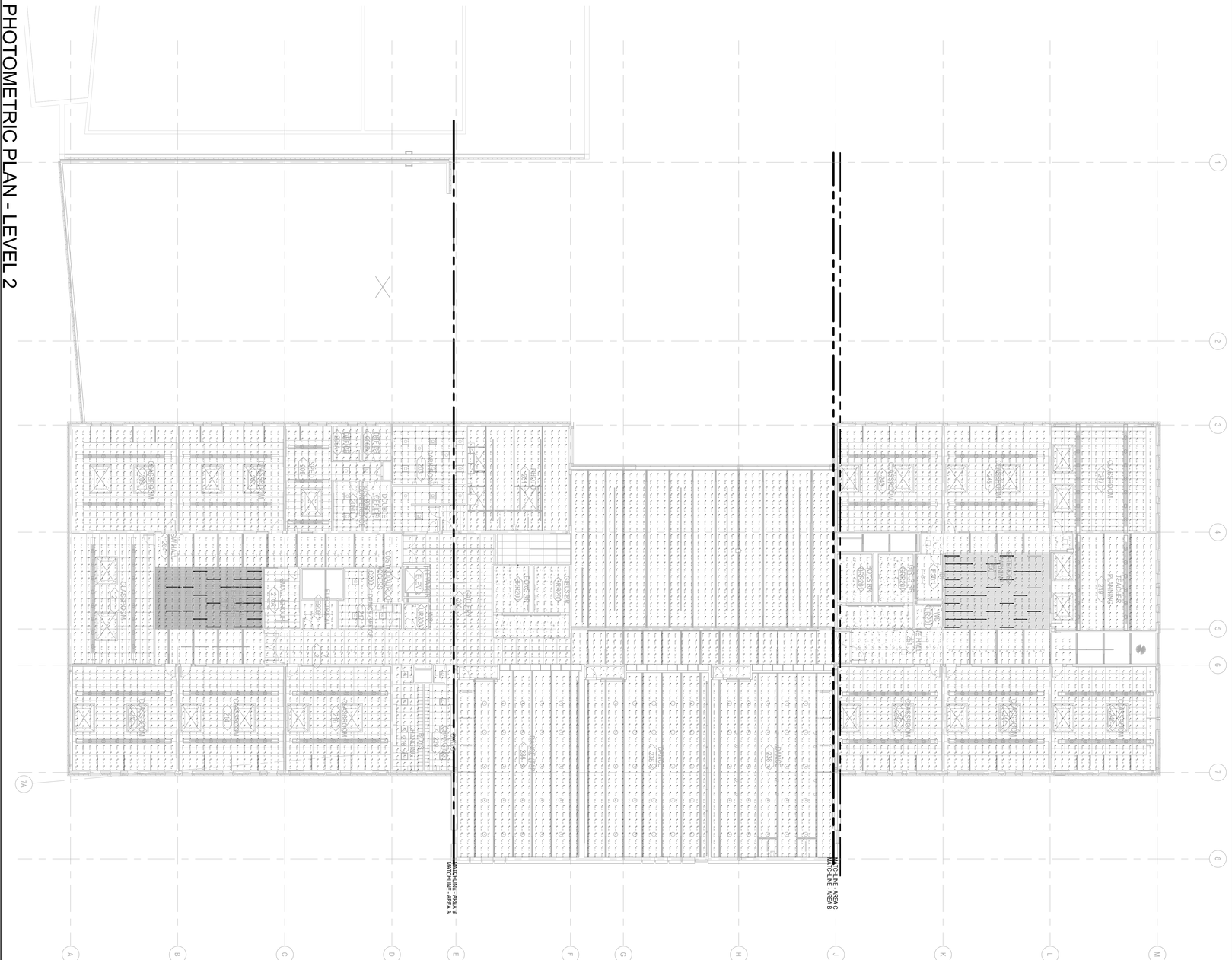

LEGEND NOTES

LEGEND NOTES ARE COMMON TO ALL
SOME NOTES MAY NOT APPLY TO THIS SHEET

DLR Group
Architecture Engineering Planning Interiors

©2019, DLR Group Architecture & Engineering inc., an Oregon corporation, ALL RIGHTS RESERVED

E9.2
74-18109-00
03/14/2019
REVISIONS

LIGHTING PHOTOMETRIC PLAN - LEVEL 2
ACMA
BEAVERTON SCHOOL DISTRICT

REGISTERED PROFESSIONAL ENGINEER
OREGON
JULY 10, 2012
NOAH STEPHENS
EXPIRES: 6/30/2019

BID/PERMIT SET

CONDITIONAL USE NUMBER: CU2018-0016
DESIGN REVIEW NUMBER: DR2018-0114
SITE DEVELOPMENT PERMIT NUMBER: TBD
BUILDING PERMIT NUMBER: TBD

NORTH

SCALE: 1/16" = 1'-0"

EM LIGHTING PHOTOMETRIC PLAN - LEVEL 1

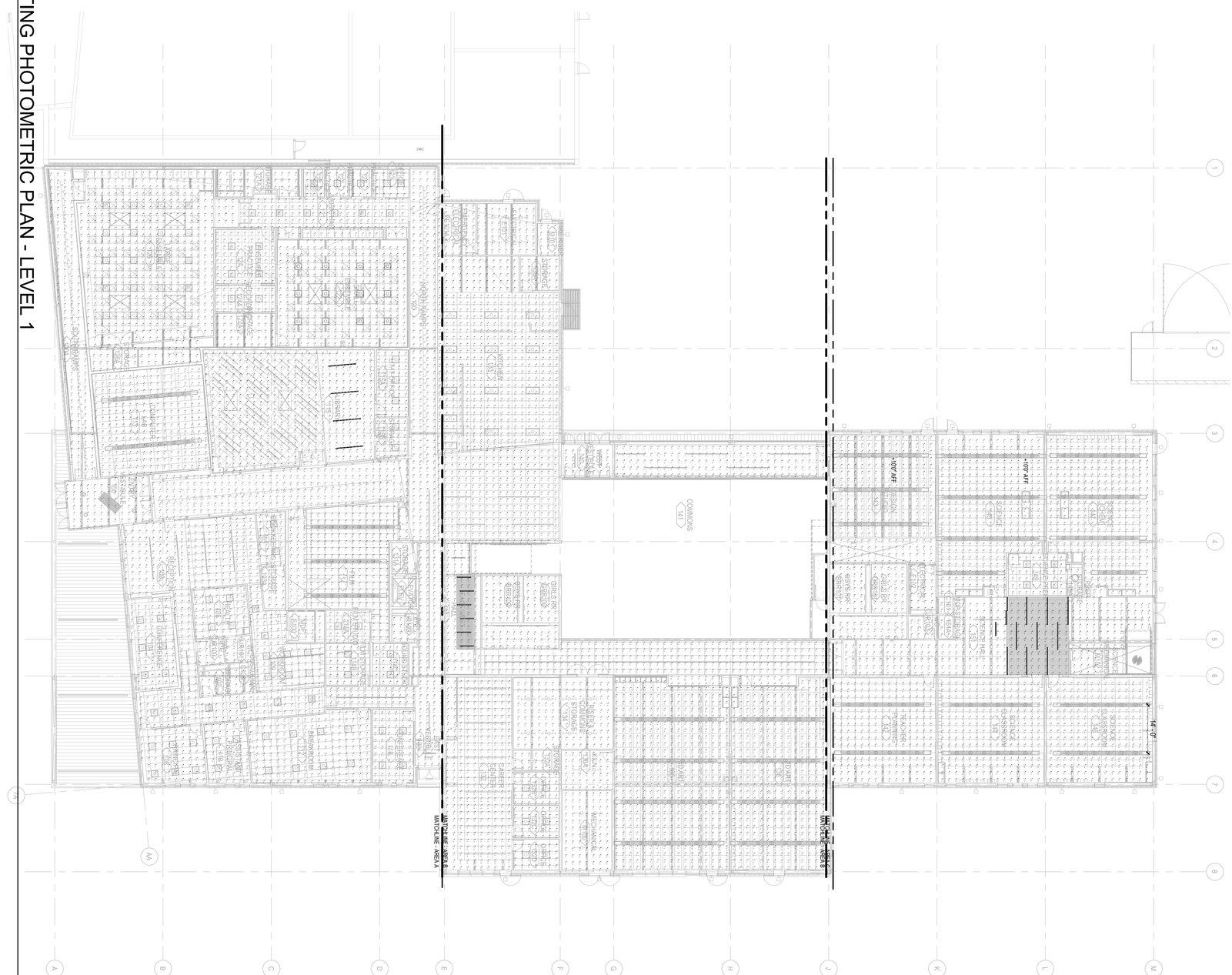

LEGEND NOTES

LEGEND NOTES ARE COMMON TO ALL
SOME NOTES MAY NOT APPLY TO THIS SHEET

DLR Group
Architecture Engineering Planning Interiors

©2019, DLR Group Architecture & Engineering inc., an Oregon corporation, ALL RIGHTS RESERVED

E9.3
74-18109-00
03/14/2019
REVISIONS

EM LIGHTING PHOTOMETRIC PLAN-LEVEL 1
ACMA
BEAVERTON SCHOOL DISTRICT

REGISTERED PROFESSIONAL ENGINEER
OREGON
JULY 10, 2012
NOAH STEPHENS
EXPIRES: 6/30/2019

BID/PERMIT SET

CONDITIONAL USE NUMBER: CU2018-0016
DESIGN REVIEW NUMBER: DR2018-0114
SITE DEVELOPMENT PERMIT NUMBER: TBD
BUILDING PERMIT NUMBER: TBD

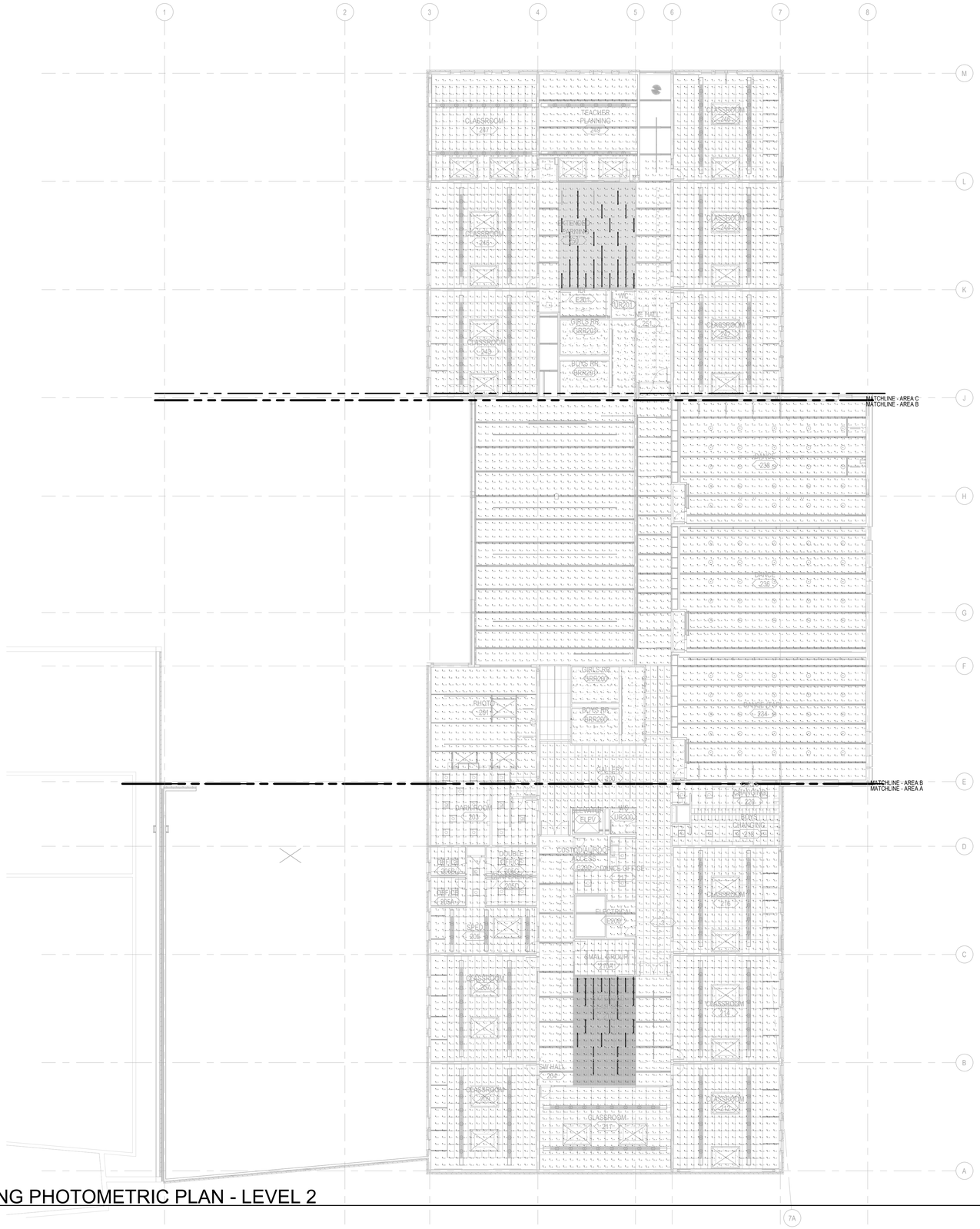
1
2
3
4
5
6
7
8
M
L
K
J
H
G
F
E
D
C
B
A
7A
TEACHER PLANNING
CLASSROOM 245
CLASSROOM 246
CLASSROOM 247
CLASSROOM 248
CLASSROOM 249
BOYS BR. QRR201
GIRLS BR. QRR202
BOYS BR. QRR203
GIRLS BR. QRR204
QR201
QR202
QR203
QR204
MATCHLINE - AREA C
MATCHLINE - AREA B
MATCHLINE - AREA B
MATCHLINE - AREA A
CLASSROOM 238
CLASSROOM 239
CLASSROOM 240
CLASSROOM 241
CLASSROOM 242
CLASSROOM 243
CLASSROOM 244
GIRLS BR. QRR205
BOYS BR. QRR206
GIRLS BR. QRR207
BOYS BR. QRR208
QR205
QR206
QR207
QR208
CLASSROOM 203
CLASSROOM 204
CLASSROOM 205
CLASSROOM 206
CLASSROOM 207
CLASSROOM 208
CLASSROOM 209
CLASSROOM 210
CLASSROOM 211
CLASSROOM 212
CLASSROOM 213
CLASSROOM 214
CLASSROOM 215
CLASSROOM 216
CLASSROOM 217
CLASSROOM 218
CLASSROOM 219
CLASSROOM 220
CLASSROOM 221
CLASSROOM 222
CLASSROOM 223
CLASSROOM 224
CLASSROOM 225
CLASSROOM 226
CLASSROOM 227
CLASSROOM 228
CLASSROOM 229
CLASSROOM 230
CLASSROOM 231
CLASSROOM 232
CLASSROOM 233
CLASSROOM 234
CLASSROOM 235
CLASSROOM 236
CLASSROOM 237
GIRLS BR. QRR209
BOYS BR. QRR210
GIRLS BR. QRR211
BOYS BR. QRR212
QR209
QR210
QR211
QR212
GIRLS BR. QRR213
BOYS BR. QRR214
GIRLS BR. QRR215
BOYS BR. QRR216
QR213
QR214
QR215
QR216
GIRLS BR. QRR217
BOYS BR. QRR218
GIRLS BR. QRR219
BOYS BR. QRR220
QR217
QR218
QR219
QR220
GIRLS BR.

ABBREVIATIONS

#	NUMBER
&	AND
@	AT
Ø	PHASE
A AMP	AMPERE
AC	ABOVE COUNTER
ACCU	AIR COOLED CONDENSING UNIT
ADA	AMERICANS WITH DISABILITY ACT
ADDN	ADDITION OR ADDITIONAL
AF	AMP FRAME (CIRCUIT BREAKER)
AFF	ABOVE FINISHED FLOOR
AFG	ABOVE FINISHED GRADE
AHJ	AUTHORITY HAVING JURISDICTION
AHU	AIR HANDLING UNIT
AIC	AMPERE INTERRUPTING CAPACITY
AL	ALUMINUM
ALT	ALTERNATE
ANSI	AMERICAN NATIONAL STANDARDS INSTITUTE
AP	WIRELESS ACCESS POINT
APPROX	APPROXIMATE
ARCH	ARCHITECTURAL
AT	AMP TRIP (CIRCUIT BREAKER OR FUSE)
ATS	AUTOMATIC TRANSFER SWITCH
AV	AUDIO-VIDEO
AWG	AMERICAN WIRE GAUGE
BAS	BUILDING AUTOMATION SYSTEM
BJ	BONDING JUMPER
BKR	BREAKER
BLDG	BUILDING
BMS	BUILDING MANAGEMENT SYSTEM
BSMT	BASEMENT
C	CONDUIT
CATV	CABLE TELEVISION
CB	CIRCUIT BREAKER
CCTV	CLOSED CIRCUIT TELEVISION
CFCI	CONTRACTOR FURNISHED CONTRACTOR INSTALLED
CKT	CIRCUIT
CL	CENTER LINE
CLG	CEILING
COMM	COMMUNICATIONS
CONC	CONCRETE
CONN(S)	CONNECTION(S)
CONST	CONSTRUCTION
CONT	CONTINUOUS
CONTR	CONTRACT(OR)
CP	COVER PLATE
CT	COOLING TOWER
CTR	CENTER
CU	COPPER
CU	CONDENSING UNIT
CUH	CABINET UNIT HEATER
D	DEPTH
DB	DECIBEL
DC	DIRECT CURRENT
DEG	DEGREE
DEMO	DEMOLISH OR DEMOLITION
DET	DETAIL
DIA	DIAMETER
DIM	DIMENSION
DISC	DISCONNECT
DIV	SPECIFICATION DIVISION
DN	DOWN
DP	DISTRIBUTION PANELBOARD
DW	DISHWASHER
DWG(S)	DRAWING(S)
E	EAST
EA	EACH
EC	ELECTRICAL CONTRACTOR
ECS	EMERGENCY COMMUNICATION SYSTEM
EL	ELEVATION
ELEC	ELECTRICAL
ELEV	ELEVATOR
EMD	ESTIMATED MAXIMUM DEMAND
ENG	ENGINEER
EP	EXPLOSION PROOF
EQ	EQUAL
EQUIP	EQUIPMENT
EQUIV	EQUIVALENT
ER	EXISTING (TO BE) RELOCATED
EWC	ELECTRIC WATER COOLER
EXIST	EXISTING
EXT	EXTERIOR
F.V.	FIELD VERIFY
FA	FIRE ALARM
FAA	FIRE ALARM ANNUNCIATOR
FACP	FIRE ALARM CONTROL PANEL
FC	FOOT CANDLE
FCU	FAN COIL UNIT
FIN	FINISHED
FL	FLOOR
FLA	FULL LOAD AMPS
FLUOR	FLUORESCENT
FS	FLOW SWITCH
FT	FEET
FUT	FUTURE
G	EQUIPMENT GROUNDING CONDUCTOR
GC	GENERAL CONTRACTOR
GEN	GENERATOR
GFCI	GROUND FAULT CIRCUIT INTERRUPTER
GND	EQUIPMENT GROUNDING CONDUCTOR
GOVT	GOVERNMENT
H	HEIGHT
HH	HANDHOLE
HOA	HAND-OFF-AUTOMATIC
HORIZ	HORIZONTAL
HP	HORSE POWER
HZ	HERTZ (FREQUENCY)
i.e.	THAT IS
IBC	INTERNATIONAL BUIDLING CODE
IC	INTERCOM
IES	ILLUMINATING ENGINEERING SOCIETY
IG	ISOLATED GROUND
IN	INCH
INT	INTERIOR
JB	JUNCTION BOX
KAIC	THOUSAND AMPERE INTERRUPTING CIRCUIT
KV	KILOVOLT
KVA	KILOVOLT AMPERES
KW	KILOWATT
LB(S)	POUND(S)
LT	LIGHT
LTG	LIGHTING
M	THOUSAND
MAX	MAXIMUM
MCA	MINIMUM CIRCUIT AMPACITY
MCB	MAIN CIRCUIT BREAKER
MCC	MOTOR CONTROL CENTER
MECH	MECHANICAL
MEZZ	MEZZANINE
MFR	MANUFACTURER
MH	MANHOLE
MIN	MINIMUM
MISC	MISCELLANEOUS
MLO	MAIN LUGS ONLY
MOCP	MAXIMUM OVERCURRENT PROTECTION
MRTS	MOTOR RATED TOGGLE SWITCH
MSB	MAIN SWITCHBOARD
MTD	MOUNTED
MTG	MOUNTING
MTS	MAIN TRANSFER SWITCH
N	NEUTRAL
N	NORTH
N.C.	NORMALLY CLOSED
N.O.	NORMALLY OPEN
N/A	NOT APPLICABLE
NEC	NATIONAL ELECTRIC CODE
NEMA	NATIONAL ELECTRICAL MANUFACTURERS ASSN.
NF	NON-FUSED
NIC	NOT IN CONTRACT
NL	NIGHT LIGHT
NTS	NOT TO SCALE
OC	ON CENTER
OFCI	OWNER FURNISHED CONTRACTOR INSTALLED
OPP	OPPOSITE
OVHD	OVERHEAD
P	POLE(S)
PA	PUBLIC ADDRESS
PAR	PARALLEL
PB	PULL BOX
PENT	PENTHOUSE
PERP	PERPENDICULAR
PH	PHASE
PIV	POST INDICATOR VALVE
PLYWD	PLYWOOD
PNL	PANEL
PWR	POWER
QTY	QUANTITY
RAD	RADIUS
RCP	REFLECTED CEILING PLAN
RECPT	RECEPTACLE
REF	REFERENCE
REQ(D)	REQUIRE(D)
REV	REVISION(S)
RM	ROOM
RND	ROUND
RTU	ROOF TOP UNIT
S	SOUTH
SCCR	SHORT CIRCUIT CURRENT RATING
SCHED	SCHEDULE
SD	SMOKE DAMPER
SEC	SECONDARY
SECT	SECTION
SHT	SHEET
SIM	SIMILAR
SPD	SURGE PROTECTION DEVICE
SPEC	SPECIFICATION(S)
STD	STANDARD
STL	STEEL
STOR	STORAGE
STRUCT	STRUCTURAL
SUSP	SUSPENDED
SWBD	SWITCHBOARD
SYM	SYMETRICAL
TBB	TELECOMMUNICATIONS BONDING BACKBONE
TC	TIME CLOCK
TEMP	TERMPORARY
TGB	TELECOMMUNICATIONS GRONDING BUSBAR
TMGB	TELECOMMUNICATIONS MAIN GRONDING BUSBAR
TO	TELECOMMUNICATIONS OUTLET
TR	TELECOMMUNICATIONS ROOM
TS	TAMPER SWITCH
TV	TELEVISION
TYP	TYPICAL
UG	UNDERGROUND
UL	UNDERWRITERS LABORATORIES
UNEX	UNEXCAVATED
UNFIN	UNFINISHED
UNO	UNLESS NOTED OTHERWISE
UTIL	UTILITY
UV	UNIT VENTILATOR
V	VOLT
VA	VOLT-AMPERE
VERT	VERTICAL
VEST	VESTIBULE
VFD	VARIABLE FREQUENCY DRIVE
VSMP	VARIABLE SPEED MOTOR CONTROLLER
W	WIRE
W	WEST
W	WATT
W/	WITH
W/O	WITHOUT
WA	TELECOMMUNICATIONS WORK AREA
WG	WIRE GUARD
WP	WEATHER-PROOF (NEMA 3R)
XFMR	TRANSFORMER

COMMUNICATIONS

- TELEPHONE OUTLET, WALL
- W — TELEPHONE OUTLET FOR WALL-MOUNTED PHONE
- P — PAY TELEPHONE OUTLET
- TELEPHONE CABINET (PBX)
- TELEPHONE BACKBOARD, SIZE AS SHOWN
- TECHNOLOGY OUTLET, WALL (VOICE, DATA, VIDEO)
- MM — MULTI-MEDIA TECHNOLOGY OUTLET, WALL
- SB — SMART-BOARD TECHNOLOGY OUTLET, WALL
- C — TECHNOLOGY OUTLET, CEILING (MULTI-MEDIA)
- FLUSH FLOOR BOX WITH TECHNOLOGY OUTLET
- MM — FLUSH FLOOR BOX WITH TWO (2) TECHNOLOGY OUTLETS (MULTI-MEDIA)
- CLOCK
- M — CLOCK - MASTER
- DS — CLOCK - DOUBLE FACE
- C — CLOCK - OUTLET
- TC — TIME CLOCK
- S — SPEAKER, WALL (GENERAL)
- S — SPEAKER, CEILING (GENERAL)
- S AV — SPEAKER, WALL (AUDIO VISUAL)
- S AV — SPEAKER, CEILING (AUDIO VISUAL)
- H — SPEAKER/HORN, WALL
- IC — INTERCOM CALLBACK STATION, WALL
- V — VOLUME CONTROL, WALL
- M — MICROPHONE CONTROL, WALL
- SR — MONITOR SPEAKER RECEPTACLE, WALL
- TV — TELEVISION OUTLET, WALL
- TV — TELEVISION OUTLET, CEILING
- TV — TELEVISION TERMINAL CABINET
- BUZZER
- C — CHIME
- M — FLUSH FLOOR BOX WITH MICROPHONE OUTLET
- D — DIRECTOR'S HEADSET, WALL
- AV — AUDIO VISUAL CONNECTION, WALL
- AV MB — AUDIO VISUAL MIXER BOARD, WALL
- AV RL — AUDIO VISUAL RECORD LIGHT, WALL
- AV TBK — AUDIO VISUAL TALKBACK BUTTON, WALL
- CP — AUDIO VISUAL CONTROL PANEL, WALL
- TS — AUDIO VISUAL TEACHER STATION, WALL
- PV — AUDIO VISUAL PLENUM VAULT, WALL
- PV — AUDIO VISUAL PLENUM VAULT, CEILING
- CM — AUDIO VISUAL CEILING MOUNT, PROJECTOR
- AV PS — AUDIO VISUAL PROJECTOR STATION, WALL
- AV LCD — AUDIO VISUAL LCD, WALL
- S AV2 — SPEAKER, CEILING (AUDIO VISUAL)
- S AV3 — PENDANT MOUNTED 70V LOUD SPEAKER, CEILING (AUDIO VISUAL)
- M — MICROPHONE, CEILING (AUDIO VISUAL)

SECURITY

- ID — INTRUSION DETECTOR, WALL
- ID — INTRUSION DETECTOR, CEILING
- C — MAGNETIC CONTACT
- SSP — SECURITY SYSTEM PANEL
- ACP — ACCESS CONTROL SYSTEM CONTROL PANEL
- DCP — DOOR CONTROL PANEL
- XXX — VIDEO CAMERA - CEILING
- ES — ELECTRIC STRIKE
- CR — CARD READER JAMB MOUNT OR WALL MOUNT 36-INCHES AFF
- EL — ELECTRIFIED HARDWARE - INCLUDES 120V OR 24V INPUT, REQUEST-TO-EXIT SENSOR, DOOR POSITION SWITCHES, ALL ELECTRIFIED ACCESS CONTROL AND DOOR HARDWARE, AND ALL ASSOCIATED ROUGH-IN. SEE ELECTRICAL DETAILS SHEETS. REFER TO DOOR HARDWARE SPECIFICATIONS.

LEGEND NOTES

LEGEND NOTES ARE COMMON TO ALL
SOME NOTES MAY NOT APPLY TO THIS SHEET

BID/PERMIT SET

CONDITIONAL USE NUMBER: CU2018-0016
DESIGN REVIEW NUMBER: DR2018-0114
SITE DEVELOPMENT PERMIT NUMBER: TBD
BUILDING PERMIT NUMBER: TBD

REGISTERED PROFESSIONAL ENGINEER
86828PE
OREGON
JULY 10, 2012
DANA STEPHENS
EXPIRES: 6/30/2020
03/13/19

TELECOM SYMBOLS & ABBREVIATIONS
ACMA
BEAVERTON SCHOOL DISTRICT

T0.0
74-18109-00
03/14/2019
REVISIONS

DLR Group
Architecture Engineering Planning Interiors

©2019 DLR Group Architecture & Engineering Inc., an Oregon corporation, ALL RIGHTS RESERVED

C:\Revit\74-18109-00_ACMA_MEP_2018_Central_p_raghu.rvt
3/13/2019 4:35:18 PM

LEGEND NOTES

LEGEND NOTES ARE COMMON TO ALL
SOME NOTES MAY NOT APPLY TO THIS SHEET

KEYED NOTES

1. PROVIDE EZ-PATH SERIES 33NEZ SMOKE AND ACOUSTICAL PATHWAY SLEEVE THROUGH WALL FOR RECORDING STUDIO WIRING PATHWAYS.
2. DOOR ENTRY STATION. SIMILAR TO AXIS COMMUNICATIONS MODEL A8004-VE OR APPROVED EQUAL. WIRE BACK TO VOIP PHONE SYSTEM LOCATED IN MDF.
3. INTRUSION DETECTION CONTROL PANEL/KEYPAD
4. AV CONNECTION. ROUTE TO RECORDING ROOM MIXER BOARD. REFER TO DETAIL 1 ON SHEET E7.2 FOR ADDITIONAL INFORMATION.
5. AV CONNECTION. ROUTE TO RECORDING ROOM MIXER BOARD. REFER TO DETAIL 2 ON SHEET E7.2 FOR ADDITIONAL INFORMATION.
6. INTERCOMM CONNECTION. ROUTE TO INTERCOM RACK PANEL IN RECORDING ROOM. REFER TO DETAIL 3 ON SHEET E7.2 FOR ADDITIONAL INFORMATION.
7. VOLUME CONTROL CONNECTION. ROUTE TO AV RACK PANEL IN RECORDING ROOM. REFER TO DETAIL 4 ON SHEET E7.2 FOR ADDITIONAL INFORMATION.
8. CABLE TV CONNECTION. ROUTE TO AV RACK PANEL IN RECORDING ROOM. REFER TO DETAIL 5 ON SHEET E7.2 FOR ADDITIONAL INFORMATION.
9. MOUNT IN DESK. COORDINATE EXACT LOCATION WITH ARCHITECTURAL PLANS.
10. SEE SHEET E0.1 ELECTRICAL SITE PLAN FOR CARD READER LOCATION ON EXISTING PAC DOOR.
11. PROVIDE AV AND DATA PLATES LOCATED WITHIN WALLBOX TV MOUNT. REFER TO DETAILS FOR ADDITIONAL INFORMATION.
12. PROVIDE (2) 1" CONDUIT IN TRENCH FROM WALL TO FLOORBOX FOR DATA AND AV CONNECTIONS.
13. TYPICAL ALL DEVICES IN ENTRY GALLERY. PROVIDE WHITE COVER PLATE USING ONE PIECE #14 COLD ROLLED ZINC PLATED STEEL WITH FIVE STAGE BAKED WHITE POLYESTER POWDER ENAMEL FINISH. BACK PLATE SHALL BE A #10 ROLLED GALVANIZED STEEL.

ALTERNATE: NEW 15 SAMSUNG CAMERA SECURITY SYSTEM FOR THE SCHOOL. ASSUME 200'-0" FROM EACH CAMERA TO HEAD END EQUIPMENT, HEAD END EQUIPMENT TO BE LOCATED IN MDF. MILESTONE SERVER IS OWNER PROVIDED CONTRACTOR INSTALLED.

DEDUCTIVE ALTERNATE DESIGN FOR THIS RAMP AREA

KEY PLAN

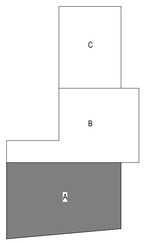

NORTH

TELECOM PLAN, FIRST LEVEL - AREA A

SCALE: 1/8" = 1'-0"

BID/PERMIT SET

CONDITIONAL USE NUMBER: CU2018-0016
DESIGN REVIEW NUMBER: DR2018-0114
SITE DEVELOPMENT PERMIT NUMBER: TBD
BUILDING PERMIT NUMBER: TBD

REGISTERED PROFESSIONAL ENGINEER
86828PE
OREGON
JULY 10, 2012
OANA STEPHENS
EXPIRES: 6/30/2019
03/13/19

TELECOM PLAN, FIRST LEVEL - AREA A
ACMA
BEAVERTON SCHOOL DISTRICT

T1.1A
74-18109-00
03/14/2019
REVISIONS

DLR Group
Architecture Engineering Planning Interiors

©2019, DLR Group Architecture & Engineering Inc., an Oregon corporation, ALL RIGHTS RESERVED

C:\Revit\74-18109-00_ACMA_MEP_2018_Central_p_raghu.rvt
3/13/2019 4:35:29 PM

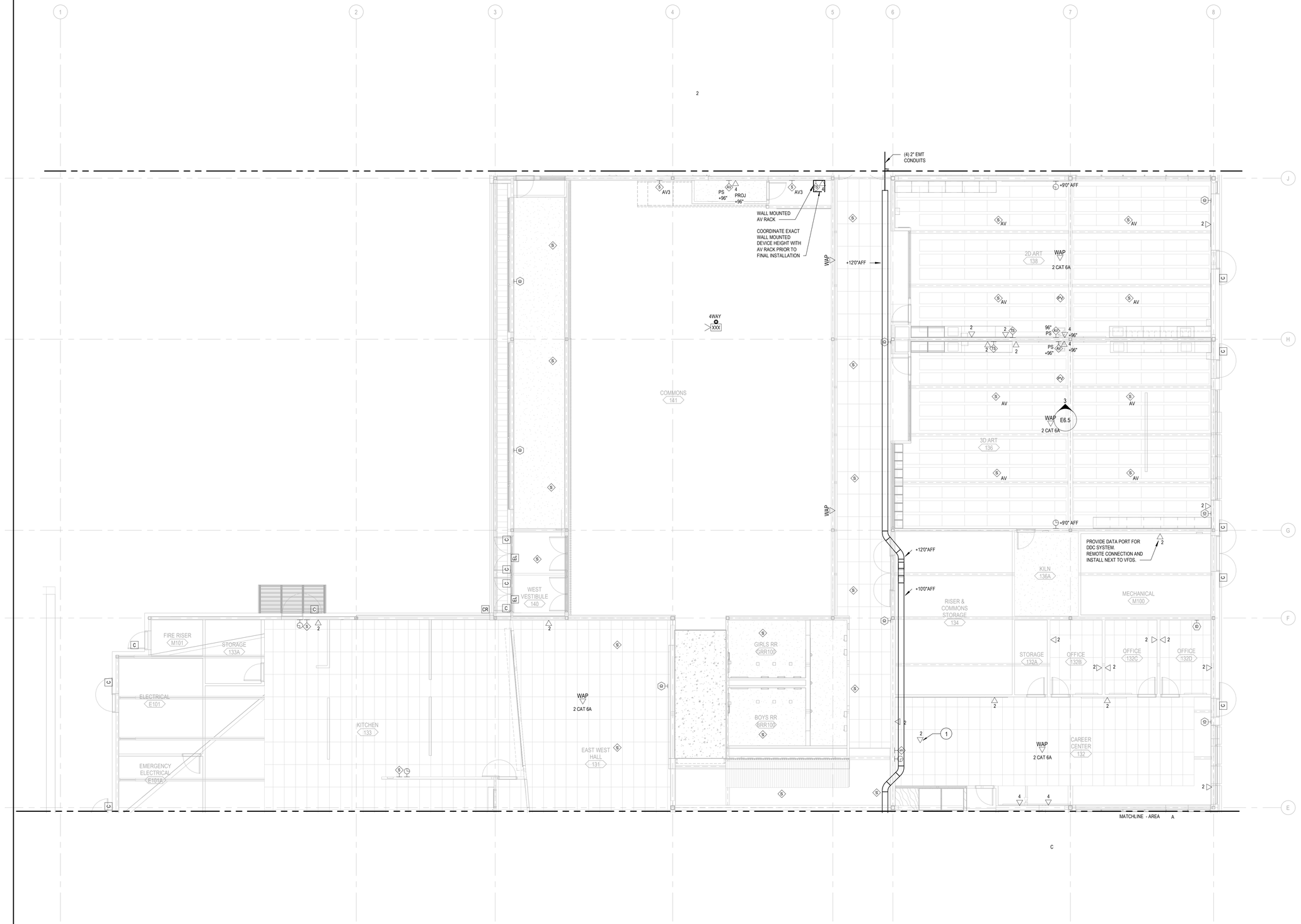

LEGEND NOTES

LEGEND NOTES ARE COMMON TO ALL
SOME NOTES MAY NOT APPLY TO THIS SHEET

KEYED NOTES

1 MOUNT IN DESK. COORDINATE EXACT LOCATION WITH ARCHITECTURAL PLANS.

KEY PLAN

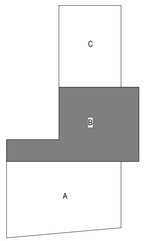

NORTH

TELECOM PLAN, FIRST LEVEL - AREA B

SCALE: 1/8" = 1'-0"

BID/PERMIT SET

CONDITIONAL USE NUMBER: CU2018-0016
DESIGN REVIEW NUMBER: DR2018-0114
SITE DEVELOPMENT PERMIT NUMBER: TBD
BUILDING PERMIT NUMBER: TBD

REGISTERED PROFESSIONAL ENGINEER
86828PE
OREGON
JULY 10, 2012
OANA STEPHENS
EXPIRES: 6/30/2020
3/13/19

TELECOM PLAN, FIRST LEVEL - AREA B
ACMA
BEAVERTON SCHOOL DISTRICT

T1.1B
74-18109-00
03/14/2019
REVISIONS

DLR Group
Architecture Engineering Planning Interiors

©2019, DLR Group Architecture & Engineering Inc., an Oregon corporation, ALL RIGHTS RESERVED

C:\Revit\74-18109-00_ACMA_MEP_2018_Central_p_raghu.rvt
3/13/2019 4:35:37 PM



LEGEND NOTES

LEGEND NOTES ARE COMMON TO ALL
SOME NOTES MAY NOT APPLY TO THIS SHEET

KEYED NOTES

1 RUN CABLE TRAY UP FROM 10'0" AFF TO 12'0" AFF TO AVOID DUCTWORK CONFLICTS.

2 PROVIDE AV AND DATA PLATES LOCATED WITHIN WALLBOX TV MOUNT. REFER TO DETAILS FOR ADDITIONAL INFORMATION.

BID/PERMIT SET

CONDITIONAL USE NUMBER: CU2018-0016
DESIGN REVIEW NUMBER: DR2018-0114
SITE DEVELOPMENT PERMIT NUMBER: TBD
BUILDING PERMIT NUMBER: TBD

REGISTERED PROFESSIONAL ENGINEER
86828PE
OREGON
JULY 10, 2012
DANA STEPHENS
3/13/19
EXPIRES: 6/30/2020

TELECOM PLAN, FIRST LEVEL - AREA C

ACMA
BEAVERTON SCHOOL DISTRICT

T1.1C
74-18109-00
03/14/2019
REVISIONS

KEY PLAN

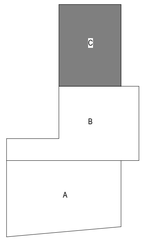

NORTH

TELECOM PLAN, FIRST LEVEL - AREA C
SCALE: 1/8" = 1'-0"

©2019, DLR Group Architecture & Engineering Inc., an Oregon corporation, ALL RIGHTS RESERVED

DLR Group
Architecture Engineering Planning Interiors

C:\Revit\74-18109-00_ACMA_MEP_2018_Central_p_raghu.rvt
3/13/2019 4:35:45 PM

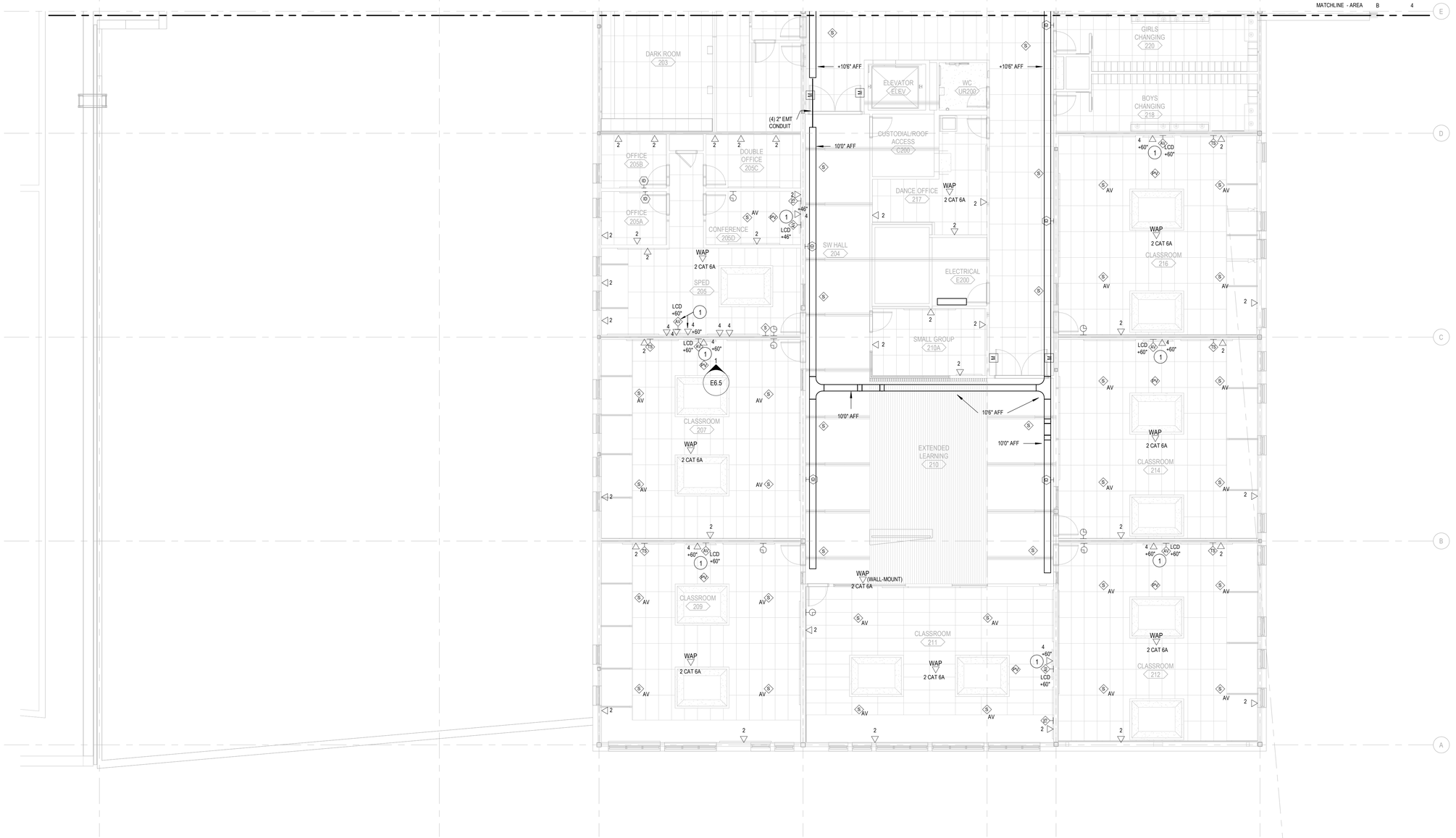

TELECOM PLAN, SECOND LEVEL - AREA A

SCALE: 1/8" = 1'-0"

NORTH

LEGEND NOTES

LEGEND NOTES ARE COMMON TO ALL
SOME NOTES MAY NOT APPLY TO THIS SHEET

KEYED NOTES

BID/PERMIT SET

CONDITIONAL USE NUMBER: CU2018-0016
DESIGN REVIEW NUMBER: DR2018-0114
SITE DEVELOPMENT PERMIT NUMBER: TBD
BUILDING PERMIT NUMBER: TBD

REGISTERED PROFESSIONAL ENGINEER
86828PE
OREGON
JULY 10, 2012
CHINA STEPHENS
EXPIRES: 6/30/2019

TELECOM PLAN, SECOND LEVEL - AREA A
ACMA
BEAVERTON SCHOOL DISTRICT

T1.2A
74-18109-00
03/14/2019
REVISIONS

KEY PLAN

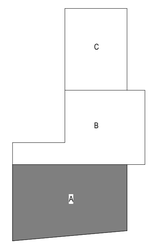

DLR Group
Architecture Engineering Planning Interiors

© 2019 DLR Group Architecture & Engineering Inc., an Oregon corporation, ALL RIGHTS RESERVED

C:\Revit\74-18109-00_ACMA_MEP_2018_Central_p_raghu.rvt
3/13/2019 4:35:52 PM

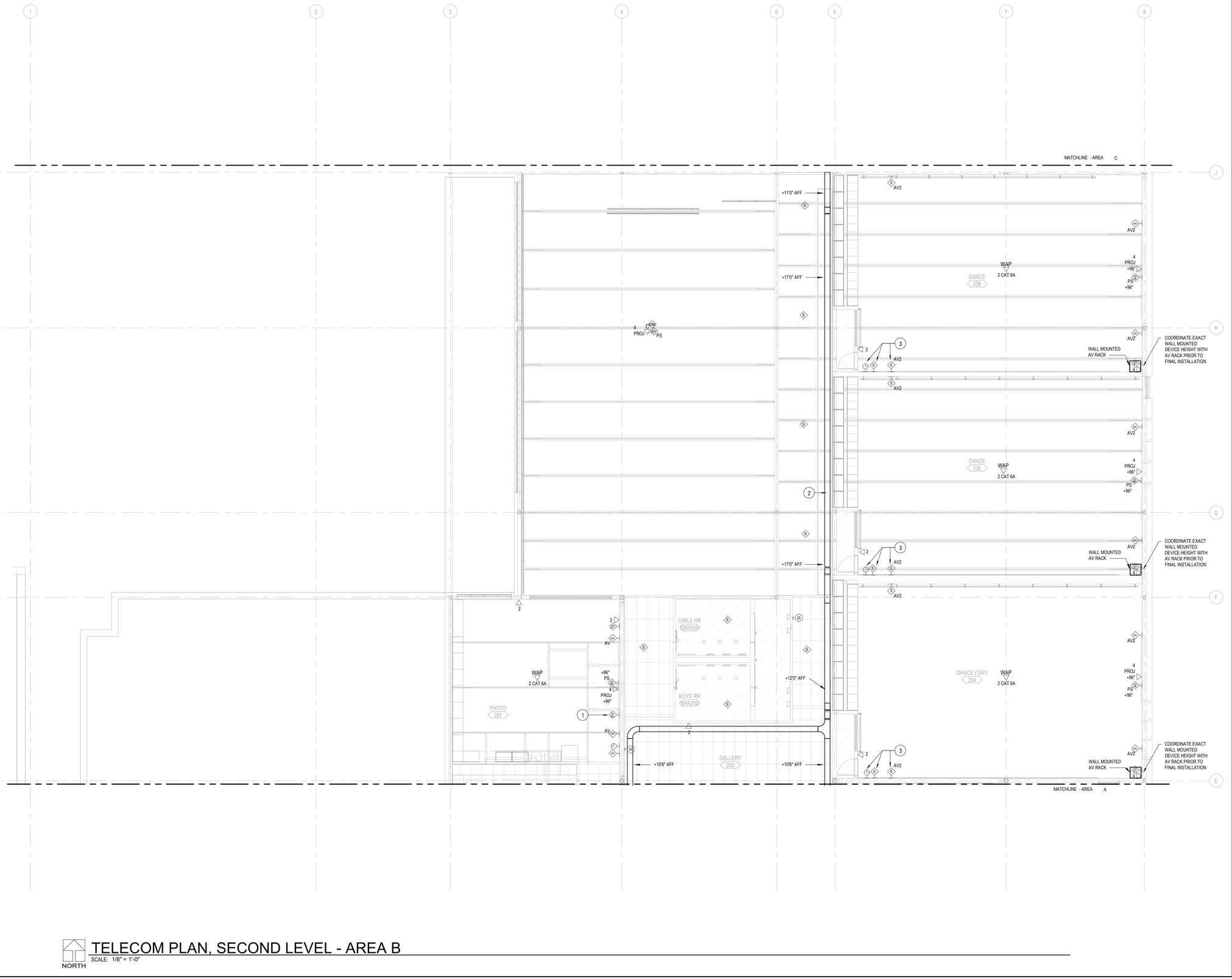

LEGEND NOTES

LEGEND NOTES ARE COMMON TO ALL
SOME NOTES MAY NOT APPLY TO THIS SHEET

KEYED NOTES

1 COORDINATE FINAL LOCATION OF AV WALL VAULT WITH ARCHITECT PRIOR TO INSTALLATION.

2 CABLE TRAY IN DANCE BALCONY CORRIDOR TO BE MOUNTED AT 17'0" AFF, ANGLING DOWN 45 DEGREES AT THE NORTH AND SOUTH ENDS TO 11'0" AFF AND 12'0" AFF RESPECTIVELY.

3 MOUNT +9'0" AFF MINIMUM TO AVOID DANCE MIRROR WALL.

KEY PLAN

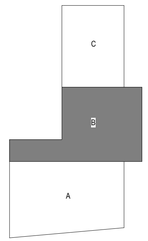

BID/PERMIT SET

CONDITIONAL USE NUMBER: CU2018-0016
DESIGN REVIEW NUMBER: DR2018-0114
SITE DEVELOPMENT PERMIT NUMBER: TBD
BUILDING PERMIT NUMBER: TBD

REGISTERED PROFESSIONAL ENGINEER
86828PE
OREGON
JULY 10, 2012
CHNA STEPHENS
EXPIRES: 6/30/2020
03/13/19

TELECOM PLAN, SECOND LEVEL - AREA B
ACMA
BEAVERTON SCHOOL DISTRICT

T1.2B
74-18109-00
03/14/2019
REVISIONS

DLR Group
Architecture Engineering Planning Interiors

©2019, DLR Group Architecture & Engineering Inc., an Oregon corporation, ALL RIGHTS RESERVED

NORTH

TELECOM PLAN, SECOND LEVEL - AREA B
SCALE: 1/8" = 1'-0"

C:\Revit\74-18109-00_ACMA_MEP_2018_Central_p_raghu.rvt
3/13/2019 4:36:00 PM

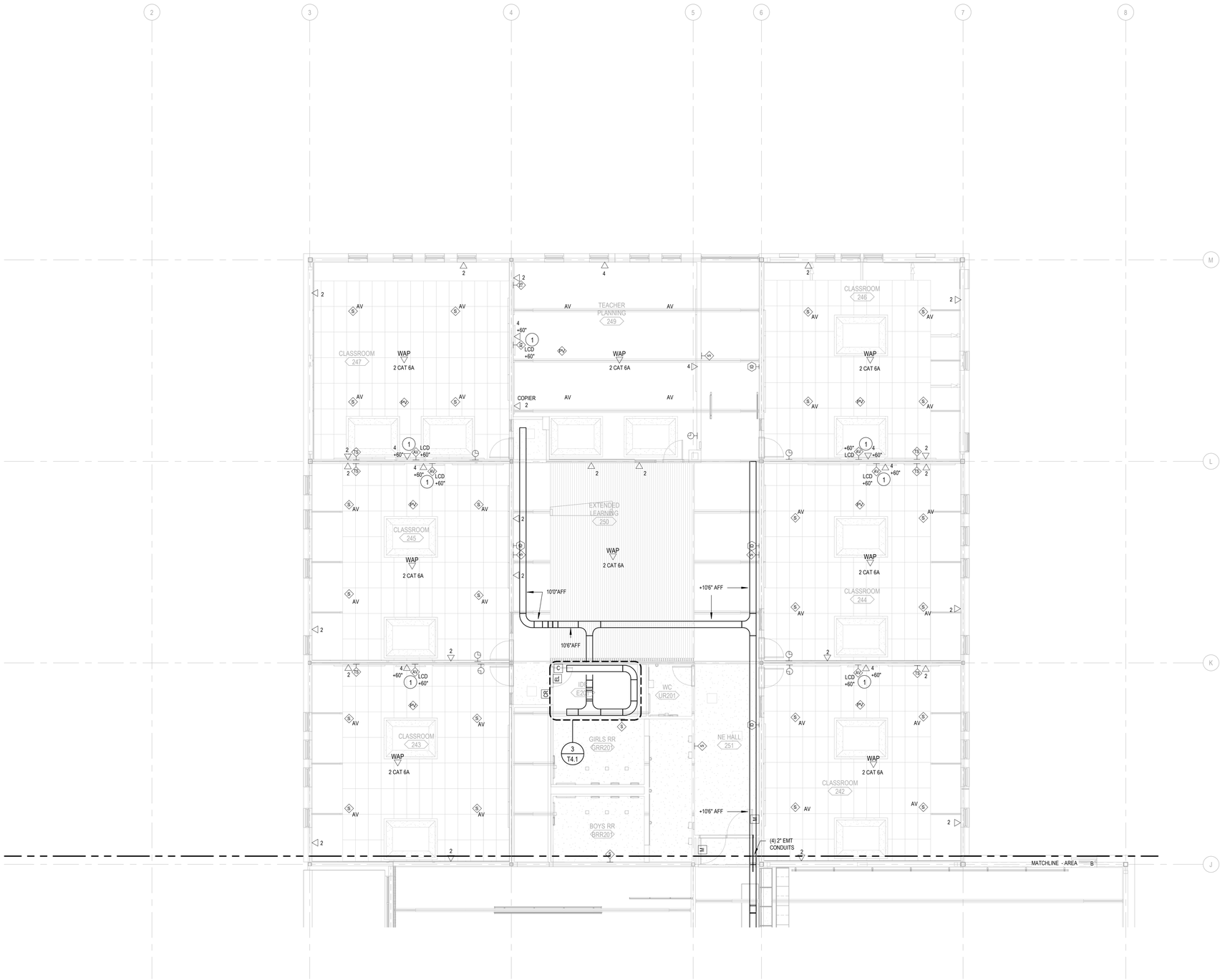

TELECOM PLAN, SECOND LEVEL - AREA C

SCALE: 1/8" = 1'-0"

NORTH

LEGEND NOTES

LEGEND NOTES ARE COMMON TO ALL
SOME NOTES MAY NOT APPLY TO THIS SHEET

KEYED NOTES

BID/PERMIT SET

CONDITIONAL USE NUMBER: CU2018-0016
DESIGN REVIEW NUMBER: DR2018-0114
SITE DEVELOPMENT PERMIT NUMBER: TBD
BUILDING PERMIT NUMBER: TBD

REGISTERED PROFESSIONAL ENGINEER
86828PE
OREGON
JULY 10, 2012
OANA STEPHENS
EXPIRES: 6/30/2020
03/13/19

TELECOM PLAN, SECOND LEVEL - AREA C
ACMA
BEAVERTON SCHOOL DISTRICT

T1.2C
74-18109-00
03/14/2019
REVISIONS

KEY PLAN

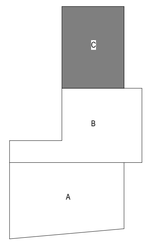

DLR Group
Architecture Engineering Planning Interiors

©2019, DLR Group Architecture & Engineering Inc., an Oregon corporation, ALL RIGHTS RESERVED

C:\Revit\74-18109-00_ACMA_MEP_2018_Central_p_raghu.rvt
3/13/2019 4:36:07 PM

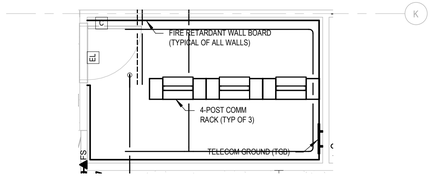

3 T4.1 ENLARGED SYSTEM PLAN - IDF E201

SCALE: 1/4" = 1'-0"

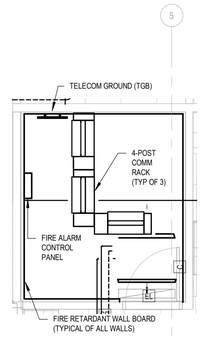

1 T4.1 ENLARGED SYSTEM PLAN - MDF E100

SCALE: 1/4" = 1'-0"

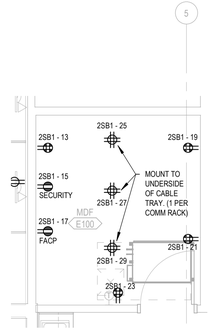

2 T4.1 ENLARGED POWER PLAN - MDF E100

SCALE: 1/4" = 1'-0"

LEGEND NOTES

LEGEND NOTES ARE COMMON TO ALL
SOME NOTES MAY NOT APPLY TO THIS SHEET

BID/PERMIT SET

CONDITIONAL USE NUMBER: CU2018-0016
DESIGN REVIEW NUMBER: DR2018-0114
SITE DEVELOPMENT PERMIT NUMBER: TBD
BUILDING PERMIT NUMBER: TBD

REGISTERED PROFESSIONAL ENGINEER
86828PE
OREGON
JULY 10, 2012
OMNA STEPHENS
EXPIRES: 6/30/2020
03/13/19

ENLARGED TELECOM ROOMS
ACMA
BEAVERTON SCHOOL DISTRICT

T4.1
74-18109-00
03/14/2019
REVISIONS

DLR Group
Architecture Engineering Planning Interiors

© 2019, DLR Group Architecture & Engineering Inc., an Oregon corporation, ALL RIGHTS RESERVED

C:\Revit\74-18109-00_ACMA_MEP_2018_Central_p_raghu.rvt
3/13/2019 4:36:13 PM

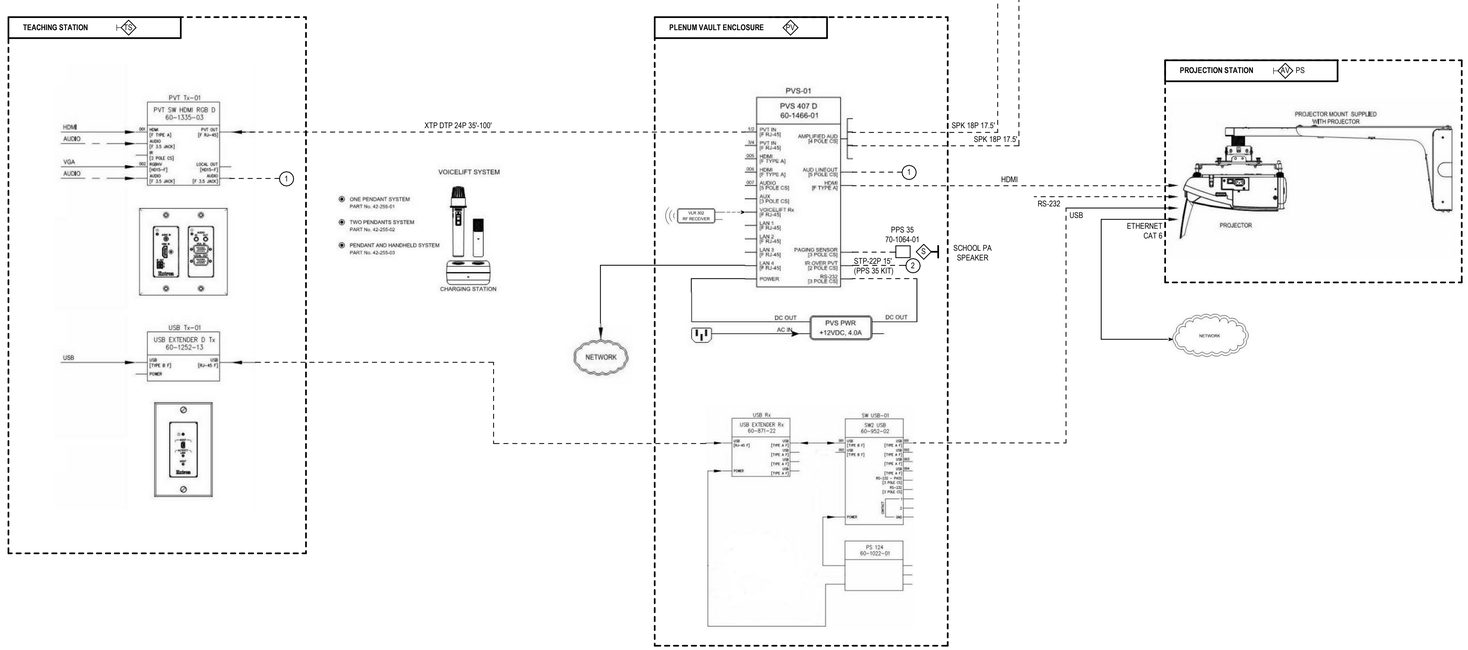

1 T5.1 TYPICAL AV DIAGRAM WITH PROJECTOR
NO SCALE

LEGEND NOTES

LEGEND NOTES ARE COMMON TO ALL
SOME NOTES MAY NOT APPLY TO THIS SHEET

BID/PERMIT SET

CONDITIONAL USE NUMBER: CU2018-0016
DESIGN REVIEW NUMBER: DR2018-0114
SITE DEVELOPMENT PERMIT NUMBER: TBD
BUILDING PERMIT NUMBER: TBD

REGISTERED PROFESSIONAL ENGINEER
86828PE
OREGON
JULY 10, 2012
DANA STEPHENS
03/13/19
EXPIRES: 6/30/2020

TELECOM RISER DIAGRAMS
ACMA
BEAVERTON SCHOOL DISTRICT

T5.1
74-18109-00
03/14/2019
REVISIONS

DLR Group
Architecture Engineering Planning Interiors

©2019, DLR Group Architecture & Engineering Inc., an Oregon corporation, ALL RIGHTS RESERVED

C:\Revit\74-18109-00_ACMA_MEP_2018_Central_p_raghu.rvt
3/13/2019 4:36:15 PM

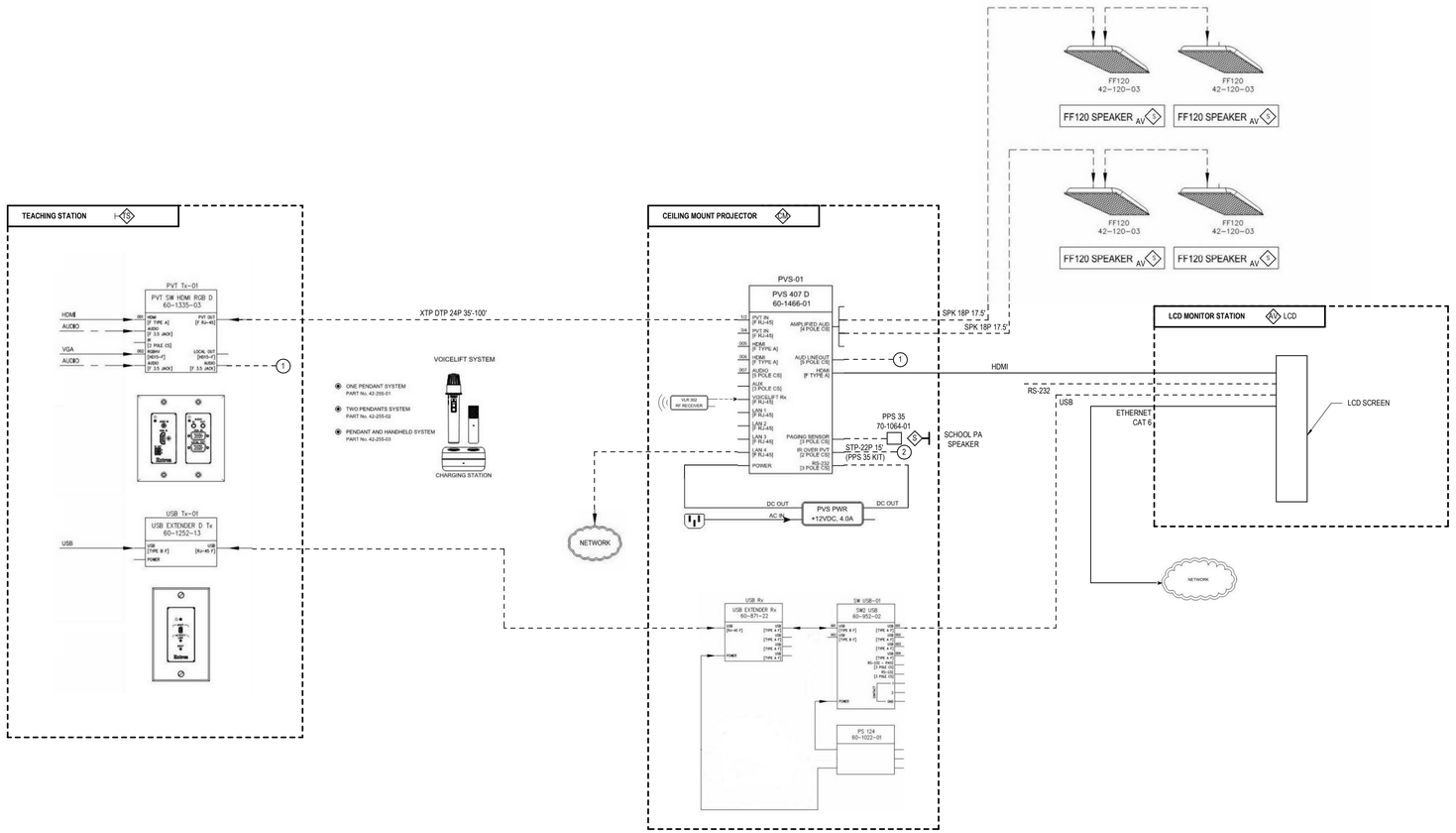

1 TYPICAL AV DIAGRAM WITH MONITOR
T5.2 NO SCALE

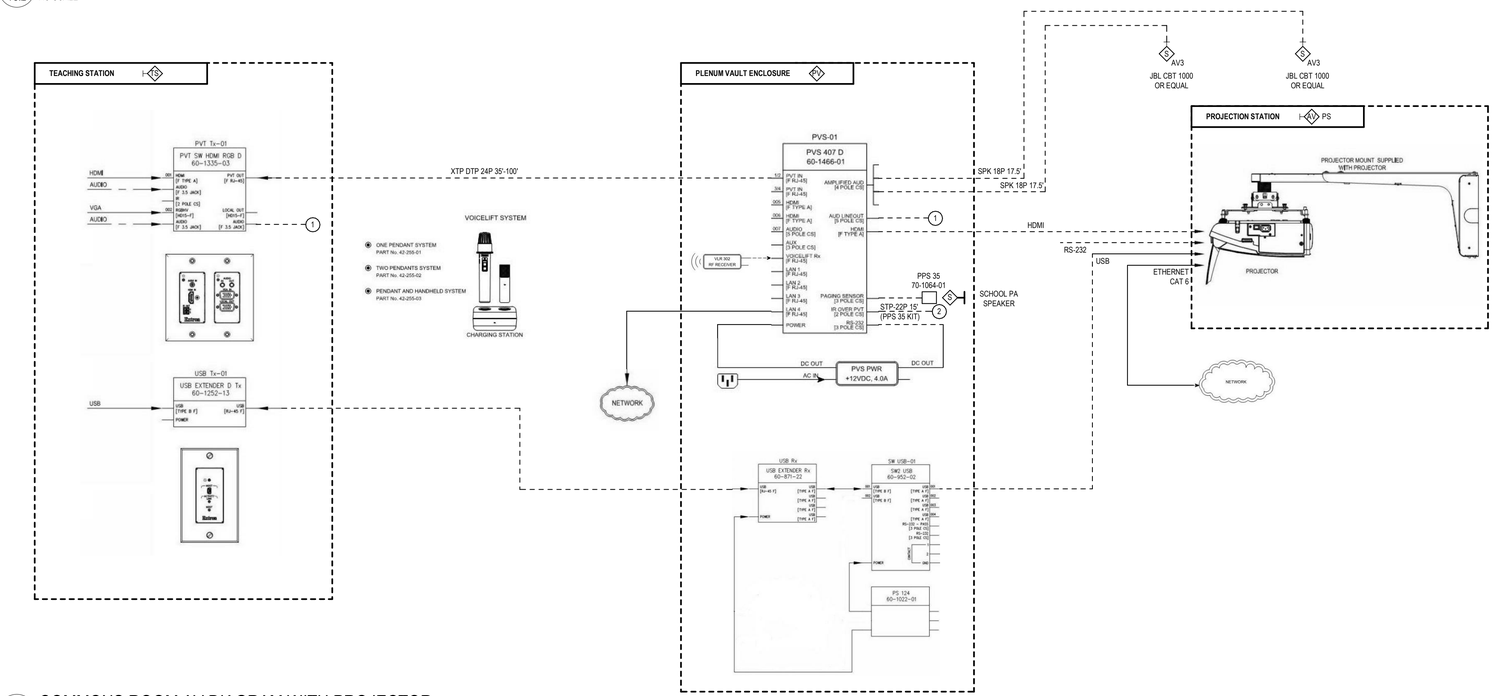

2 COMMONS ROOM AV DIAGRAM WITH PROJECTOR
T5.2 NO SCALE

LEGEND NOTES

LEGEND NOTES ARE COMMON TO ALL
SOME NOTES MAY NOT APPLY TO THIS SHEET

BID/PERMIT SET

CONDITIONAL USE NUMBER: CU2018-0016
DESIGN REVIEW NUMBER: DR2018-0114
SITE DEVELOPMENT PERMIT NUMBER: TBD
BUILDING PERMIT NUMBER: TBD

REGISTERED PROFESSIONAL ENGINEER
86828PE
OREGON
JULY 10, 2012
DANA STEPHENS
EXPIRES: 6/30/2020
3/13/19

TELECOM RISER DIAGRAMS
ACMA
BEAVERTON SCHOOL DISTRICT

T5.2
74-18109-00
03/14/2019
REVISIONS

DLR Group
Architecture Engineering Planning Interiors

© 2019, DLR Group Architecture & Engineering Inc., an Oregon corporation, ALL RIGHTS RESERVED

C:\Revit\74-18109-00_ACMA_MEP_2018_Central_p_raghu.rvt
3/13/2019 4:36:18 PM

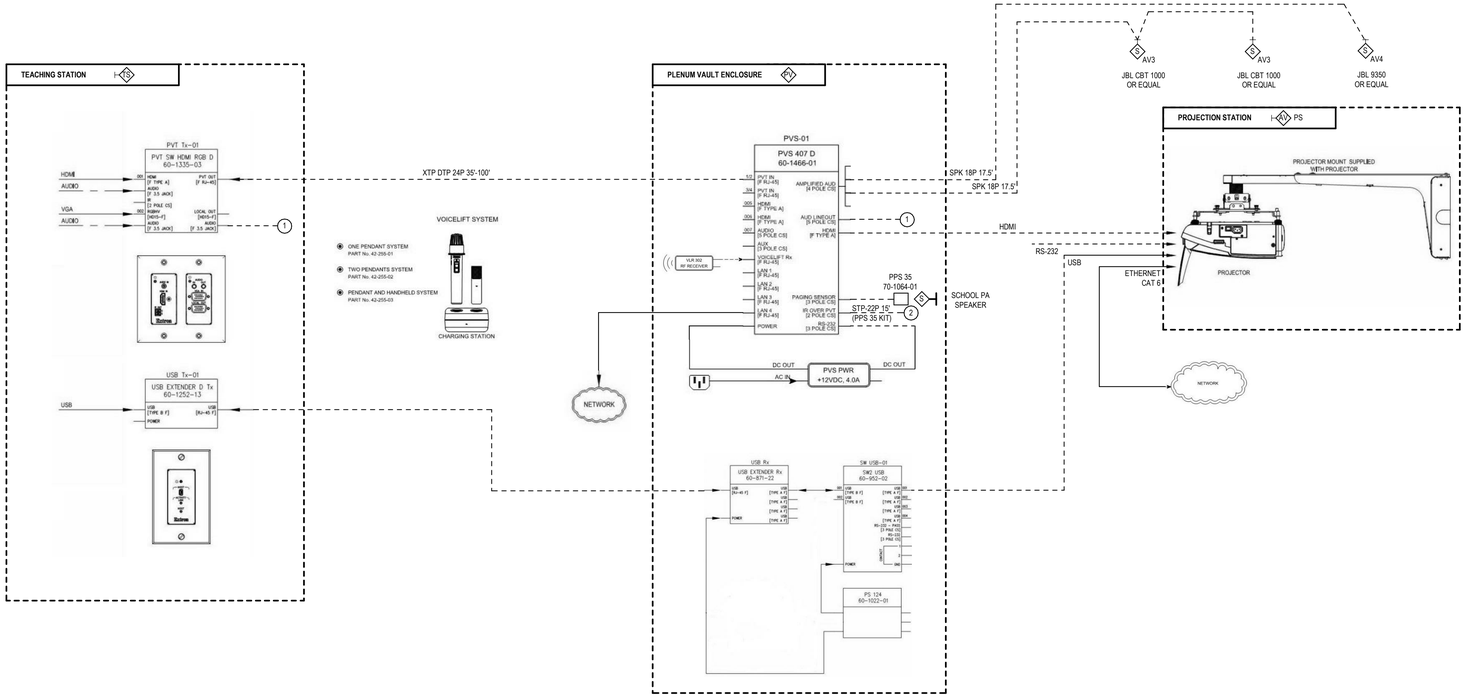

1 T5.3 FILM ROOM AV DIAGRAM WITH PROJECTOR
NO SCALE

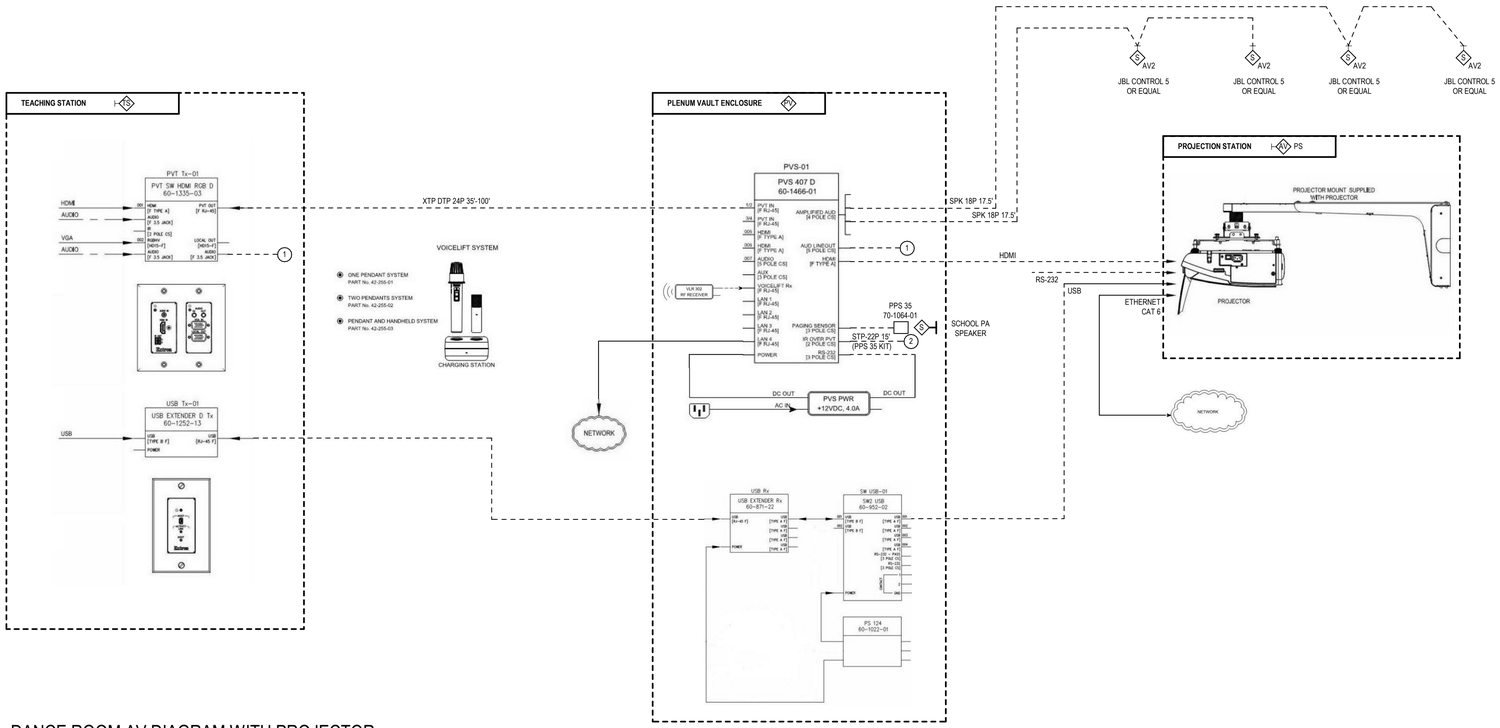

2 T5.3 DANCE ROOM AV DIAGRAM WITH PROJECTOR
NO SCALE

LEGEND NOTES

LEGEND NOTES ARE COMMON TO ALL
SOME NOTES MAY NOT APPLY TO THIS SHEET

BID/PERMIT SET

CONDITIONAL USE NUMBER: CU2018-0016
DESIGN REVIEW NUMBER: DR2018-0114
SITE DEVELOPMENT PERMIT NUMBER: TBD
BUILDING PERMIT NUMBER: TBD

REGISTERED PROFESSIONAL ENGINEER
86828PE
OREGON
JULY 10, 2012
OANA STEPHENS
03/13/19
EXPIRES: 6/30/2020

TELECOM RISER DIAGRAMS
ACMA
BEAVERTON SCHOOL DISTRICT

T5.3
74-18109-00
03/14/2019
REVISIONS

DLR Group
Architecture Engineering Planning Interiors

© 2019, DLR Group Architecture & Engineering Inc., an Oregon corporation, ALL RIGHTS RESERVED

C:\Revit\74-18109-00_ACMA_MEP_2018_Central_p_raghu.rvt
3/13/2019 4:36:21 PM

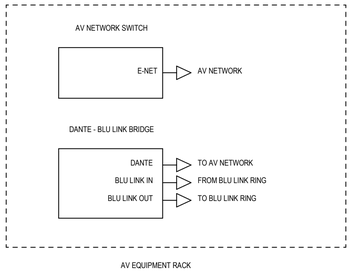

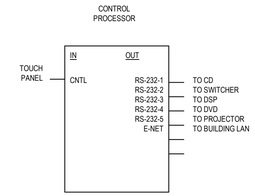

SMALL ENSEMBLE

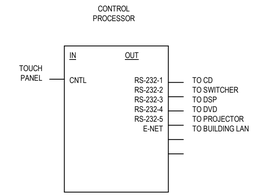

LARGE ENSEMBLE

1 T5.4 AV SYSTEM HEAD END RISER DIAGRAM
NO SCALE

2 T5.4 AV CONTROL PANEL ONE-LINE DIAGRAMS
NO SCALE

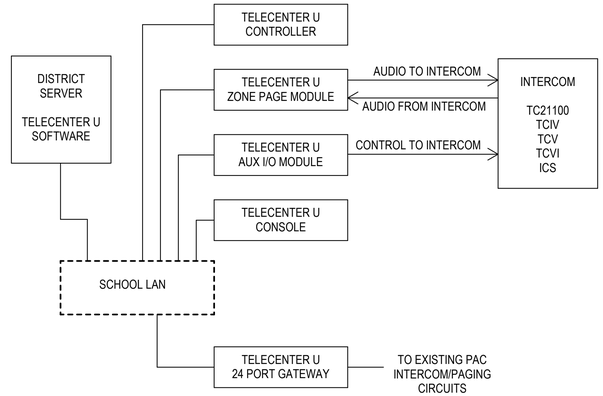

3 T5.4 INTERCOM PAGING LINE DIAGRAM
NO SCALE

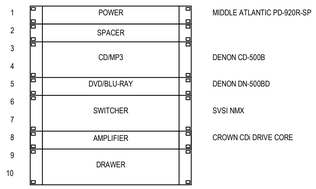

COMMONS

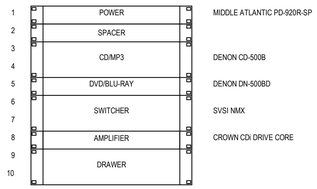

DANCE ROOM

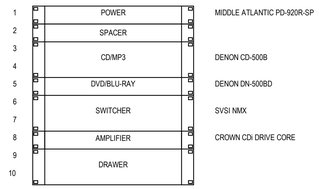

FILM ROOM

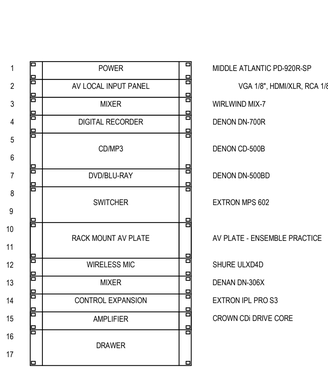

SMALL ENSEMBLE

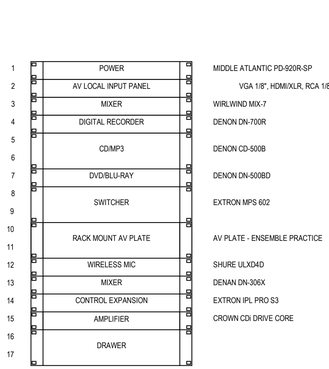

LARGE ENSEMBLE

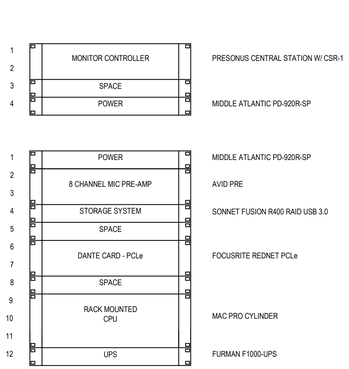

STUDIO DESK - RECORDING ROOM (TYPICAL OF 2 TABLES)

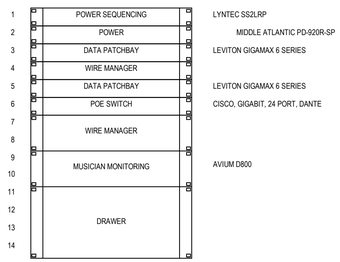

PATCHBAY - SECTION 1

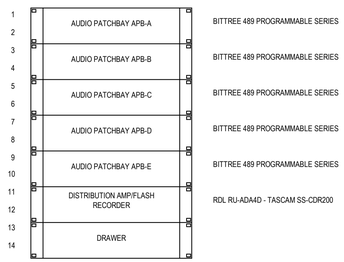

PATCHBAY - SECTION 2

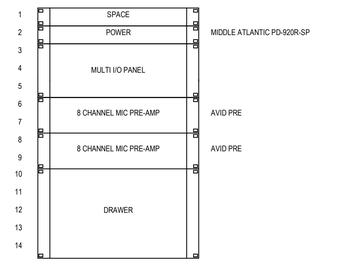

PATCHBAY - SECTION 3

4 T5.4 AV SYSTEM RACK DIAGRAMS
NO SCALE

GENERAL NOTES

1. ALL AC OUTLETS, CONDUIT & BACKBOXES BY DIV 16.
2. REQUIRED STRUCTURAL BACKING BY STRUCTURAL ENGINEER.
3. A/V CONTRACTOR TO COORDINATE WITH DIV 16 TO DETERMINE EXACT LOCATION OF A/V BACKBOXES.
4. ALL VISIBLE LOUDSPEAKERS & PANELS SHALL BE PROVIDED IN A COLOR AS DETERMINED BY THE ARCHITECT DURING THE SHOP DRAWING PHASE. COORDINATE EXACT MOUNTING CONDITIONS WITH ARCHITECT, STRUCTURAL ENGINEER & GENERAL CONTRACTOR.

LEGEND NOTES

LEGEND NOTES ARE COMMON TO ALL
SOME NOTES MAY NOT APPLY TO THIS SHEET

BID/PERMIT SET

CONDITIONAL USE NUMBER: CU2018-0016
DESIGN REVIEW NUMBER: DR2018-0114
SITE DEVELOPMENT PERMIT NUMBER: TBD
BUILDING PERMIT NUMBER: TBD

REGISTERED PROFESSIONAL ENGINEER
86828PE
OREGON
JULY 10, 2012
DANA STEPHENS
EXPIRES: 6/30/2020
03/13/19

TELECOM RISER DIAGRAMS
ACMA
BEAVERTON SCHOOL DISTRICT

T5.4
74-18109-00
03/14/2019
REVISIONS

DLR Group
Architecture Engineering Planning Interiors

©2019, DLR Group Architecture & Engineering Inc., an Oregon corporation, ALL RIGHTS RESERVED

C:\Revit\74-18109-00_ACMA_MEP_2018_Central_p_raghu.rvt
3/13/2019 4:36:25 PM

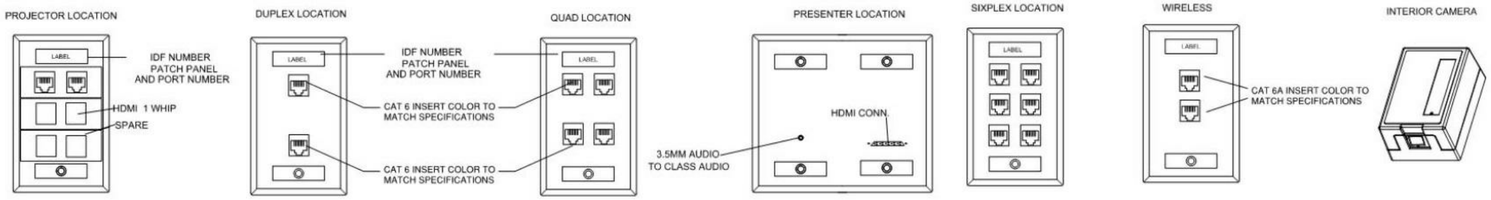

1 T7.1 TELECOM FACEPLATE DETAIL
NO SCALE

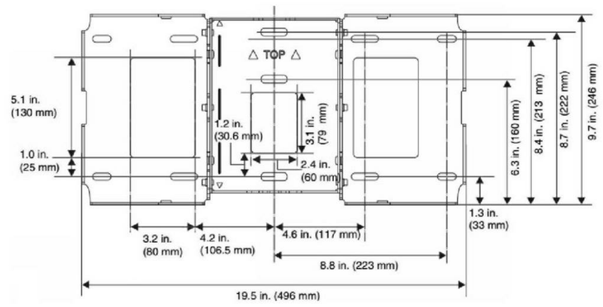

GENERAL NOTE

1. PERFORM FIELD MOCKUP OF A SINGLE SHORT THROW PROJECTOR LOCATION TO VERIFY DIMENSIONS. THE DIMENSIONS LISTED ARE ESTIMATED FOR THE SHORT THROW PROJECTOR.

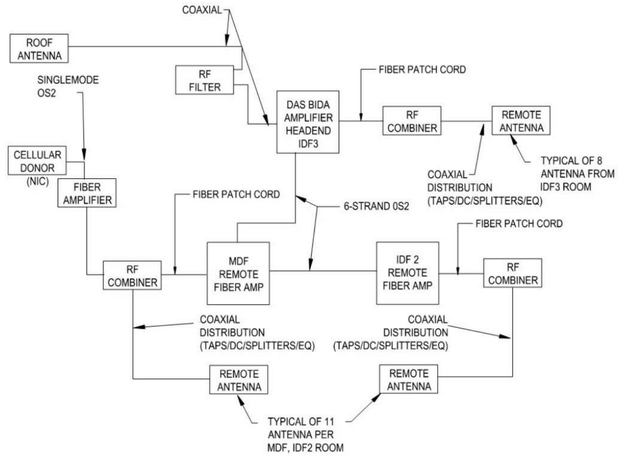

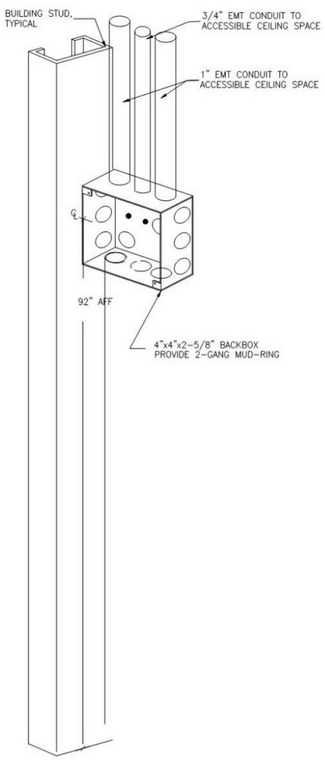

3 T7.1 SHORT THROW PROJECTOR MOUNT
NO SCALE

4 T7.1 DAS ONE LINE DIAGRAM
NO SCALE

2 T7.1 AV RACEWAY
NO SCALE

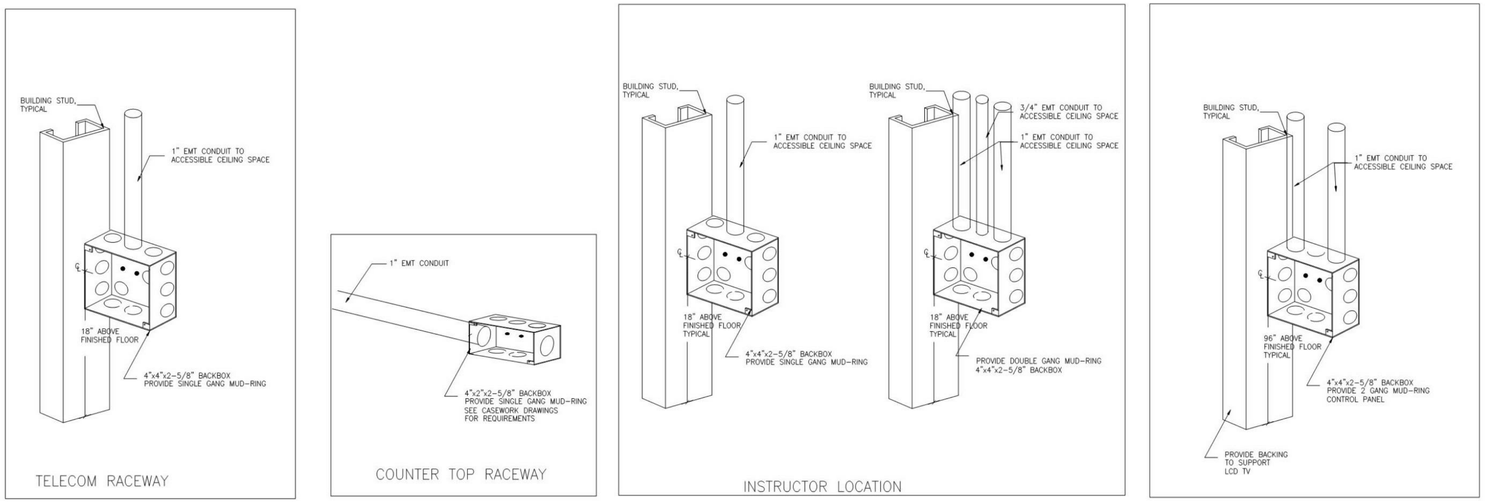

5 T7.1 TELECOM RACEWAY AND BOXES
NO SCALE

BID/PERMIT SET

CONDITIONAL USE NUMBER: CU2018-0016
DESIGN REVIEW NUMBER: DR2018-0114
SITE DEVELOPMENT PERMIT NUMBER: TBD
BUILDING PERMIT NUMBER: TBD

REGISTERED PROFESSIONAL ENGINEER
86828PE
OREGON
JULY 10, 2012
DANA STEPHENS
EXPIRES: 6/30/2020
03/13/19

TELECOM RACEWAY AND FACEPLATE
ACMA
BEAVERTON SCHOOL DISTRICT

T7.1
74-18109-00
03/14/2019
REVISIONS

DLR Group
Architecture Engineering Planning Interiors

©2019, DLR Group Architecture & Engineering Inc., an Oregon corporation, ALL RIGHTS RESERVED

C:\Revit\74-18109-00_ACMA_MEP_2018_Central_p_raghu.rvt
3/13/2019 4:36:28 PM

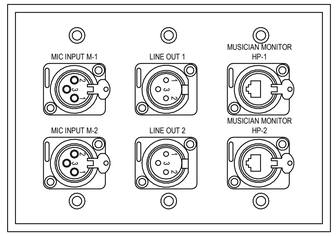

1 T7.2 AV PLATE - PRACTICE ROOMS
NO SCALE

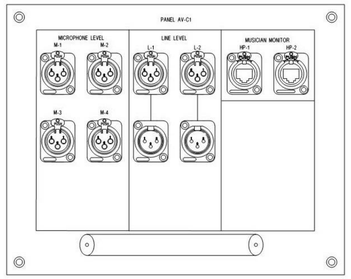

2 T7.2 AV PLATE - ENSEMBLE PRACTICE ROOM
NO SCALE

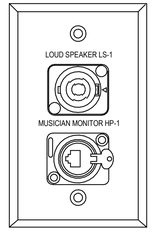

3 T7.2 AV PLATE - LOUD SPEAKER
NO SCALE

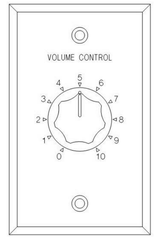

4 T7.2 AV PLATE - VOLUME CONTROL
NO SCALE



5 T7.2 AV PLATE - CABLE TV
NO SCALE

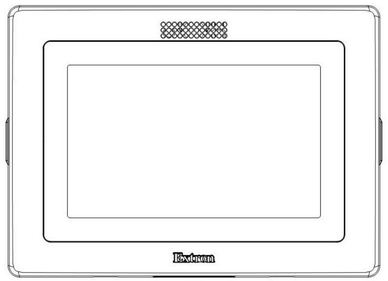

6 T7.2 AV PLATE - CONTROL PANEL (SMALL/LARGE ENSEMBLE)
NO SCALE

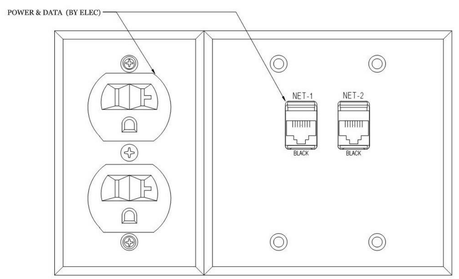

*THESE ARE INSERTS FOR FSR FL-500P-6 FLOOR POCKET

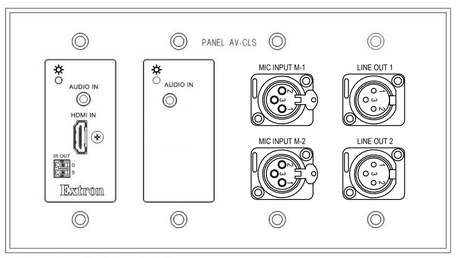

7 T7.2 AV PLATE - FLOOR BOX (SMALL/LARGE ENSEMBLE)
NO SCALE

BID/PERMIT SET

CONDITIONAL USE NUMBER: CU2018-0016
DESIGN REVIEW NUMBER: DR2018-0114
SITE DEVELOPMENT PERMIT NUMBER: TBD
BUILDING PERMIT NUMBER: TBD

REGISTERED PROFESSIONAL ENGINEER
86828PE
OREGON
JULY 10, 2012
DANA STEPHENS
EXPIRES: 6/30/2020
3/13/19

TELECOM DETAILS
ACMA
BEAVERTON SCHOOL DISTRICT

T7.2
74-18109-00
03/14/2019
REVISIONS

DLR Group
Architecture Engineering Planning Interiors

©2019, DLR Group Architecture & Engineering Inc., an Oregon corporation, ALL RIGHTS RESERVED

C:\Revit\74-18109-00_ACMA_MEP_2018_Central_p_raghu.rvt
3/13/2019 4:36:31 PM

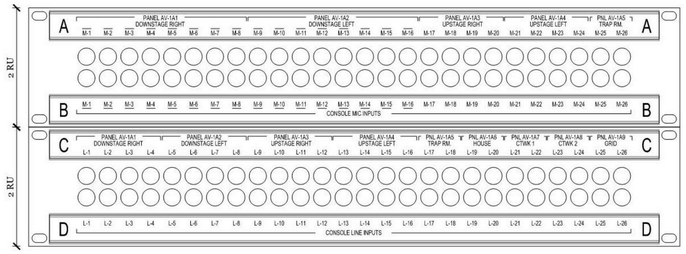

NOTES:
- USE PAPER LEGENDS. PROVIDE COMPUTER FILE TO USER FOR FUTURE MODIFICATIONS.
- DENOTE NORMALS WITH HORIZONTAL LINE ABOVE & BELOW AT LEGEND (AS SHOWN ABOVE).
- SEE SPECIFICATIONS FOR FUTHER INFO ON TERMINATION, GROUNDING, ETC.
- NUMBER SIGNAL TYPES SEQUENTIALLY. FIELD PLATE LEGENDS SHALL EXACTLY MATCH PATCHBAY.

6 AV TYPICAL MIC/LINE LEVEL PATCHBAY
T7.3 NO SCALE

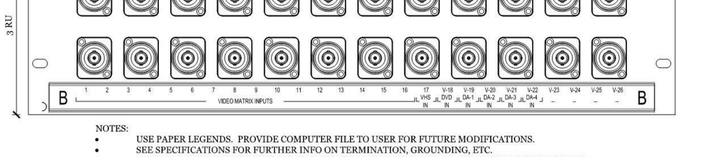

NOTES:
- USE PAPER LEGENDS. PROVIDE COMPUTER FILE TO USER FOR FUTURE MODIFICATIONS.
- DENOTE NORMALS WITH HORIZONTAL LINE ABOVE & BELOW AT LEGEND.
- SEE SPECIFICATIONS FOR FUTHER INFO ON TERMINATION, GROUNDING, ETC.
- NUMBER SIGNAL TYPES SEQUENTIALLY. FIELD PLATE LEGENDS SHALL EXACTLY MATCH PATCHBAY.

7 AV TYPICAL VIDEO LEVEL PATHBAY
T7.3 NO SCALE

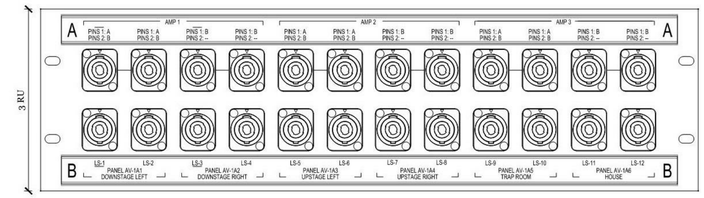

NOTES:
- USE PAPER LEGENDS. PROVIDE COMPUTER FILE TO USER FOR FUTURE MODIFICATIONS.
- DENOTE NORMALS WITH HORIZONTAL LINE ABOVE & BELOW AT LEGEND.
- SEE SPECIFICATIONS FOR FUTHER INFO ON TERMINATION, GROUNDING, ETC.
- NUMBER SIGNAL TYPES SEQUENTIALLY. FIELD PLATE LEGENDS SHALL EXACTLY MATCH PATCHBAY.

8 AV TYPICAL LOUDSPEAKER LEVEL PATCHBAY
T7.3 NO SCALE

NOTES:
- USE PAPER LEGENDS. PROVIDE COMPUTER FILE TO USER FOR FUTURE MODIFICATIONS.
- SEE SPECIFICATIONS FOR FURTHER INFO ON TERMINATION, GROUNDING, ETC.
- NUMBER SIGNAL TYPES SEQUENTIALLY. FIELD PLATE LEGENDS SHALL EXACTLY MATCH PATCHBAY.

9 AV TYPICAL VIDEO BULKHEAD PATCHBAY
T7.3 NO SCALE

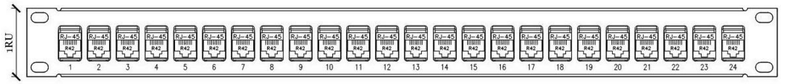

NOTES:
- SEE SPECIFICATIONS FOR FURTHER INFO ON TERMINATION, GROUNDING, ETC.
- NUMBER SIGNAL TYPES SEQUENTIALLY. FIELD PLATE LEGENDS SHALL EXACTLY MATCH PATCHBAY.

1 AV TYPICAL DATA PATCHBAY DETAIL
T7.3 NO SCALE

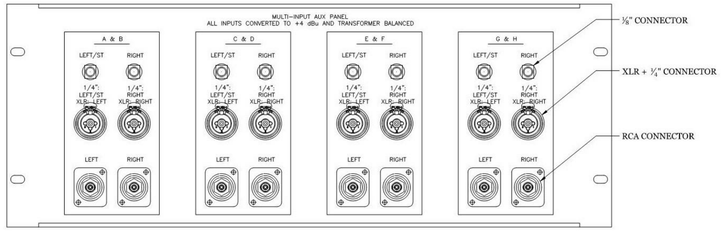

NOTES:
- PROVIDE BALANCING TRANSFORMER AND AMPLIFICATION TO +4 dBu FOR EACH INPUT.
- FIRST 1/8" AND 1/4" JACK IN ANY PAIR WIRED AS STEREO (TRS). SECOND JACK WIRED AS MONO (TS).
- PROVIDE WHITE RCA JACK INSERT FOR LEFT, AND RED INSERT FOR RIGHT.

2 AV MULTI-INPUT PANEL DETAIL
T7.3 NO SCALE



3 AV WIRELESS MIC ANTENNA OUTPUT PANEL
T7.3 NO SCALE



4 AV INTERCOM PANEL
T7.3 NO SCALE



5 AV INPUT PANEL
T7.3 NO SCALE

BID/PERMIT SET

CONDITIONAL USE NUMBER: CU2018-0016
DESIGN REVIEW NUMBER: DR2018-8114
SITE DEVELOPMENT PERMIT NUMBER: TBD
BUILDING PERMIT NUMBER: TBD

REGISTERED PROFESSIONAL ENGINEER 86828PE OREGON JULY 10, 2012 CHNA STEPHENS
EXPIRES: 6/30/2020
03/13/19

TELECOM DETAILS
ACMA
BEAVERTON SCHOOL DISTRICT

T7.3
74-18109-00
03/14/2019
REVISIONS

DLR Group
Architecture Engineering Planning Interiors

©2019, DLR Group Architecture & Engineering Inc., an Oregon corporation, ALL RIGHTS RESERVED

C:\Revit\74-18109-00_ACMA_MEP_2018_Central_p_raghu.rvt
3/13/2019 4:36:34 PM

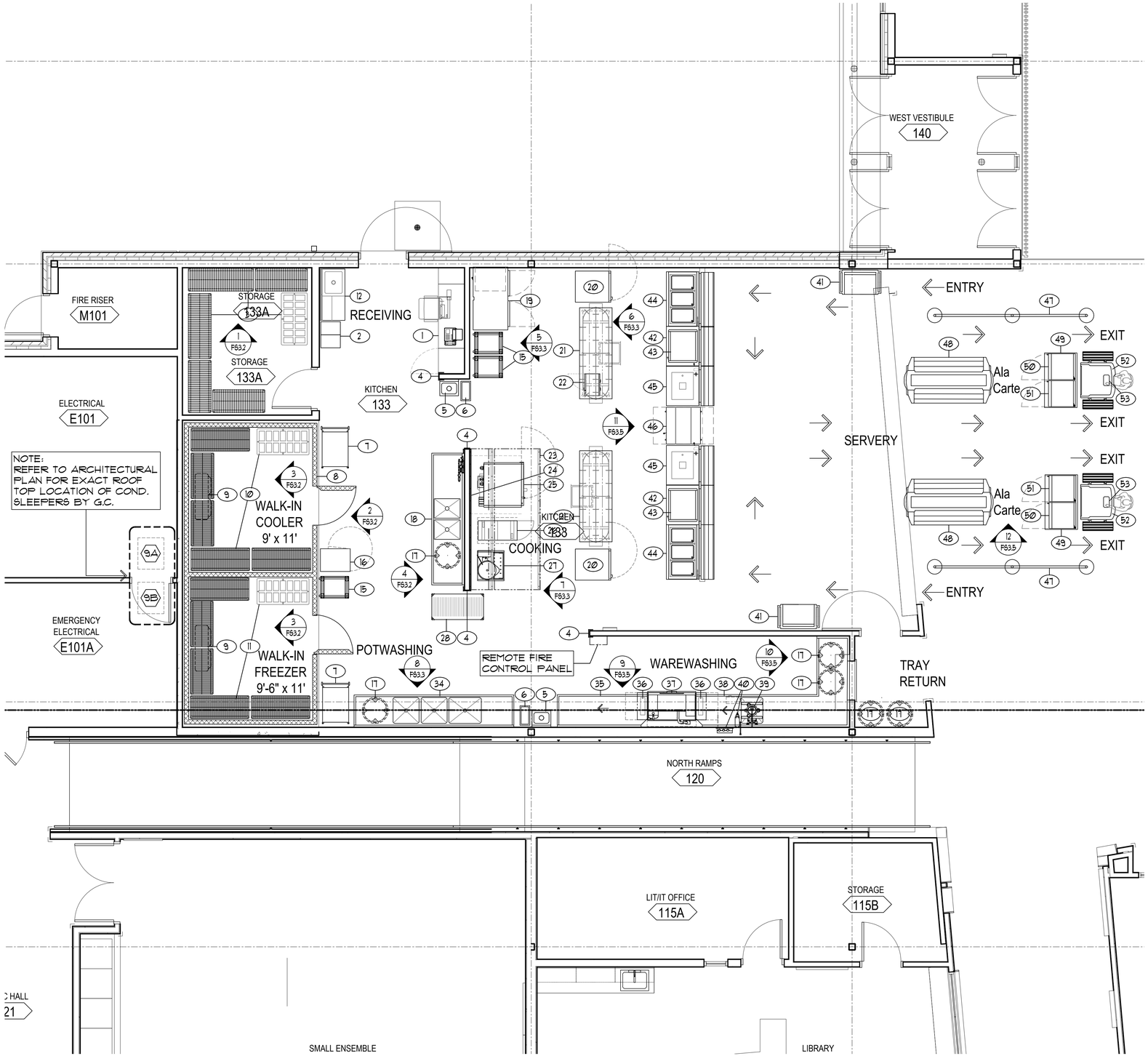

EQUIPMENT SCHEDULE

ITEM	DESCRIPTION	QUAN.	REMARKS:
1	MANAGERS STATION	1	OWNER FURNISHED & INSTALLED
2	STAFF LOCKERS (HALF SIZE)	4	SPECIFIED BY ARCHITECTURAL DIVISION
3	DRY STORAGE SHELVING	LOT	---
4	CORNER/CHANNEL GUARDS	LOT	---
5	HAND WASHING SINKS	2	---
6	SLIM JIMS	2	---
7	UTILITY CARTS	2	---
8	WALK-IN COLD STORAGE ROOMS	2	---
9	REFRIGERATON SYSTEMS	2	---
10	WALK-IN COOLER SHELVING	LOT	---
11	WALK-IN FREEZER SHELVING	LOT	---
12	MOP SINK CABINET	1	---
13	NOT USED	---	---
14	NOT USED	---	---
15	SHEET PAN RACKS	3	---
16	MOBILE INSULATED HOLDING CABINET	1	---
17	MOBILE WASTE RECEPTACLES	6	---
18	VEGETABLE PREP SINK TABLE	1	---
19	REACH-IN REFRIGERATOR	1	---
20	MOBILE HOT HOLDING CABINETS	2	---
21	ISLAND COOK'S TABLES WITH CIRCULAR POT RACKS	2	---
22	MICROWAVE OVEN	1	---
23	CANOPY HOOD WITH FIRE PROTECTION SYSTEM	1	---
24	STAINLESS STEEL WALL FLASHING	LOT	---
25	DOUBLE STACK COMBI-OVEN STEAMER/CONVECTION OVEN	1	CONVECTION STACKED ON COMBI-OVEN
26	BOIL COOK TOP	1	---
27	12-GALLON TILTING KETTLE WITH STAND	1	---
28	MOBILE POT & PAN SHELVING	1	---
29	NOT USED	---	---
30	NOT USED	---	---
31	NOT USED	---	---
32	NOT USED	---	---
33	NOT USED	---	---
34	POT WASHING SINK TABLE	1	---
35	CLEAN DISHTABLE	1	---
36	VAPOR EXHAUST DUCTS	2	---
37	WAREWASHER WITH BOOSTER HEATER	1	---
38	SOILED DISHTABLE WITH TRAY RETURN WINDOW	1	---
39	DISPOSER	1	---
40	HOSE REEL WITH CONTROL CABINET	1	---
41	FLATWARE/TRAY PICK-UP CARTS	2	---
42	FLAT TOP FOOD SERVING COUNTERS	2	---
43	HEATED PASS-THRU GRAB 'N GO CASES	2	---
44	HOT/COLD FOOD SERVING COUNTERS	2	---
45	COLD FOOD SERVING COUNTERS	2	---
46	MOBILE REFRIGERATED MILK COOLER	1	---
47	PORTABLE TRAFFIC CONTROL RAILINGS	LOT	---
48	DOUBLE-SIDED ICED SALAD BARS	2	---
49	FLAT TOP MOBILE COUNTERS	2	---
50	REACH-IN REFRIGERATED MERCHANDISING CASES	2	---
51	REACH-IN FREEZER MERCHANDISING CASES	2	---
52	MOBILE CASHIER STATIONS	2	---
53	POINT OF SALE SYSTEM	LOT	OWNER FURNISHED & INSTALLED
54	MOBILE ICED CONDIMENT STATION	1	NOT SHOWN ON PLAN

FOOD SERVICE EQUIPMENT PLAN, LEVEL 1

SCALE: 1/14" = 1'-0"

NORTH

HALLIDAY ASSOCIATES
656 NW NORWOOD
CAMAS, WASH. 98607
360 834 6557
FAX 360 834 5453
FOOD FACILITY CONSULTANTS
SPACE PLANNING + DESIGN

KEY PLAN

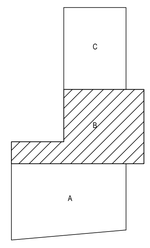

BID/PERMIT SET

Food Service Equipment Plan
ACMA
BEAVERTON SCHOOL DISTRICT

FS1.1
74-18109-00
03/14/19
REVISIONS

DLR Group
Architecture Engineering Planning Interiors

© 2019, DLR Group Architecture & Engineering Inc., an Oregon corporation. ALL RIGHTS RESERVED

C:\Revit\74-18109-00_ACMA_AR_2018_Central_jgooding@dlrgroup.com.rvt
2/23/2018 12:12:44 PM

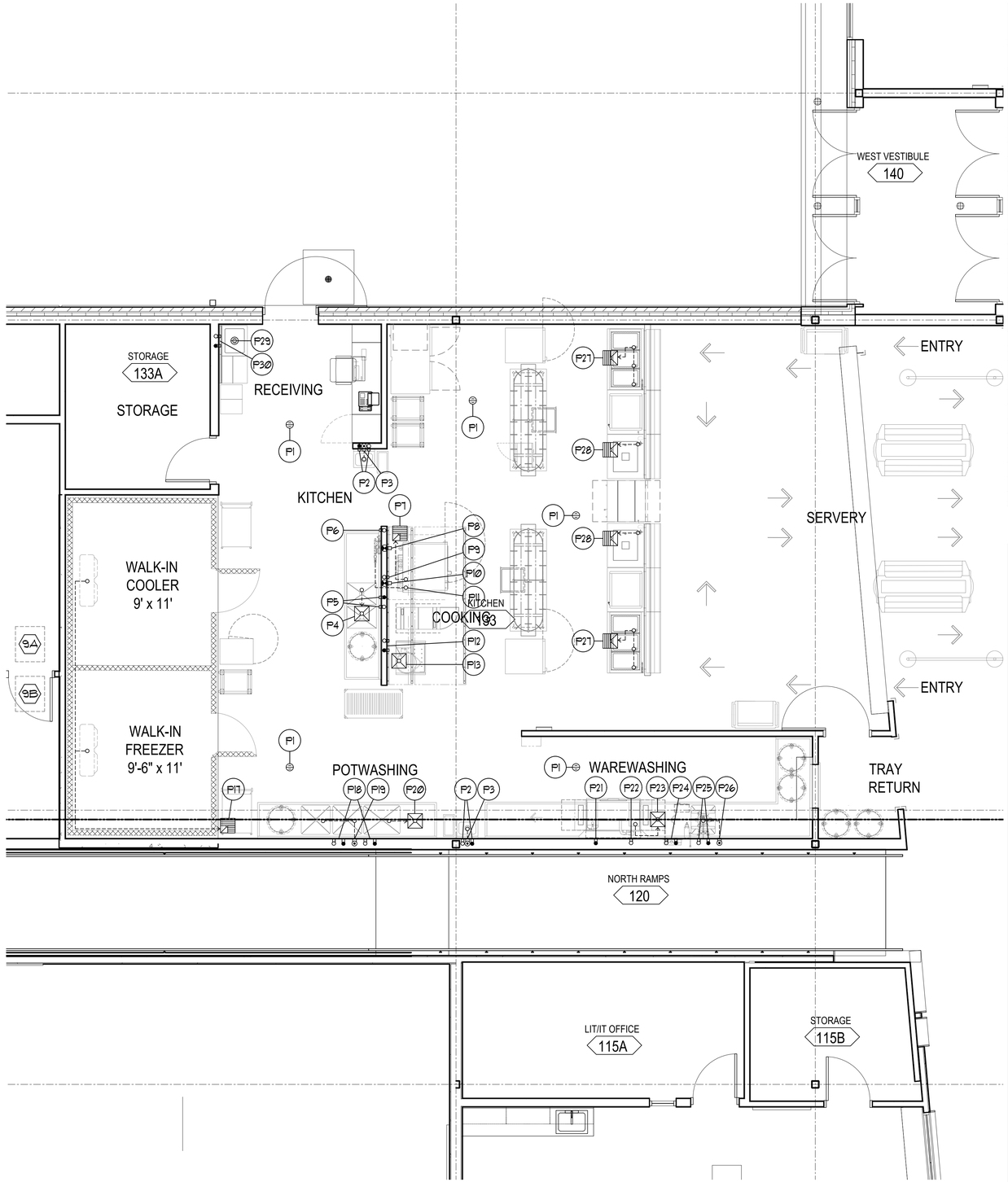

PLUMBING SCHEDULE

ITEM NO.	P. NO.	SIZE	DESCRIPTION	LOCATION	HEIGHT	SERVICE TO :	REMARKS:
---	P1	---	FLOOR DRAIN	FLOOR	-1/2"	AREA DRAIN	---
5	P2	1/2"	HOT & COLD	WALL	22"	HAND WASHING SINK	20 GPH HOT
5	P3	1-1/2"	WASTE	WALL	20"	HAND WASHING SINK	---
18	P4	12" x 12"	FLOOR SINK	FLOOR	0"	(2) SINK DRAINS	NO GRATE
18	P5	1/2"	HOT & COLD	WALL	16"	SINK FAUCET	20 GPH HOT
---	P6	1/2"	COLD	WALL	56"	WATER FILTRATION SYSTEM	INTERCONNECT W/COMBI-OVEN STEAMER (P11)
25	P7	12" x 12"	FLOOR SINK	FLOOR	0"	COMBI-OVEN STEAMER	THREE-QUARTER GRATE
25	P8	3/4"	GAS	WALL	10"	CONVECTION OVEN	60M BTU - QUICK DISCONNECT
25	P9	3/4"	COLD	WALL	39"	COMBI-OVEN STEAMER	FOR CONDENSER
25	P10	3/4"	GAS	WALL	35"	COMBI-OVEN STEAMER	115M BTU - QUICK DISCONNECT
25	P11	3/4"	COLD	WALL	35"	COMBI-OVEN STEAMER	FOR BOILER - SUPPLY FROM P6
27	P12	1/2"	HOT & COLD	WALL	35"	12-GALLON TILTING KETTLE FILL FAUCET	20 GPH HOT
27	P13	12" x 12"	FLOOR SINK	FLOOR	0"	12-GALLON TILTING KETTLE WITH STAND	HALF GRATE
---	P14	---	NOT USED	---	---	---	---
---	P15	---	NOT USED	---	---	---	---
---	P16	---	NOT USED	---	---	---	---
9	P17	12" x 12"	FLOOR SINK	FLOOR	0"	WALK-IN EVAPORATOR DRAINS	THREE-QUARTER GRATE
34	P18	1/2"	HOT & COLD	WALL	16"	SINK FAUCETS	20 GPH HOT
34	P19	2"	WASTE	WALL	9"	(2) SINK DRAINS	CONNECT TO GREASE INTERCEPTOR
33	P20	12" x 12"	FLOOR SINK	FLOOR	0"	HOT WATER HEATER SINK DRAIN	NO GRATE
37	P21	1/2"	HOT @ 120°	WALL	11"	WAREWASHER WITH BOOSTER HEATER	126 GPH HOT @ 20 PSI
37	P22	1/2"	COLD	WALL	11"	WAREWASHER DRAIN WATER TEMPERING	---
37	P23	12" x 12"	FLOOR SINK	FLOOR	0"	WAREWASHER WITH BOOSTER HEATER	NO GRATE
40	P24	1/2"	HOT & COLD	WALL	56"	HOSE REEL WITH RECESSED CONTROL CABINET	40 GPH HOT
38	P25	1/2"	HOT & COLD	WALL	22"	PRE-RINSE FAUCET	40 GPH HOT. TEE COLD TO DISPOSER INLET
39	P26	2"	WASTE	WALL	26"	DISPOSER	---
44	P27	12" x 12"	FLOOR SINK	FLOOR	0"	HOT/COLD FOOD SERVING COUNTER	HALF GRATE
45	P28	12" x 12"	FLOOR SINK	FLOOR	0"	COLD FOOD SERVING COUNTER	HALF GRATE
12	P29	---	FLOOR DRAIN	---	---	JANITOR'S SINK	REQUIREMENTS BY DIVISION 22
12	P30	---	HOT & COLD	---	---	JANITOR'S SINK	REQUIREMENTS BY DIVISION 22

PLUMBING NOTES

1. THIS DRAWING IS NOT TO BE USED FOR ESTABLISHING ROUGH-IN LOCATIONS. REFER TO DIMENSIONED DRAWING PREPARED BY THE KITCHEN EQUIPMENT CONTRACTOR.
2. UNDER PLUMBING WORK OF DIVISION 22, MAKE ALL ROUGH-INS AND FINAL CONNECTIONS IN CONFORMANCE WITH LOCAL CODES. PROVIDE SHUT-OFF VALVES WITH PERMANENT NAME TAGS IDENTIFYING SUPPLY LINES TO EACH INDIVIDUAL PIECE OF EQUIPMENT. INCLUDE TRAPS, TAIL PIECES, AND LINE STRAINERS AS REQUIRED.
3. UNDER PLUMBING WORK OF DIVISION 22, FURNISH AND INSTALL ALL FLOOR SINKS AND AREA DRAINS FLUSH WITH FINISHED FLOOR IF CODE ALLOWS.
4. UNDER PLUMBING WORK OF DIVISION 22, FURNISH AND INSTALL GREASE TRAP OR INTERCEPTOR AS REQUIRED.
5. UNDER PLUMBING WORK OF DIVISION 22, FURNISH AND INSTALL ALL SINK WASTE LINES. USE COPPER TUBING UNEXPOSED AND PAINTED WHERE LINES ARE VISIBLE. NO PVC PIPING IS ACCEPTABLE.
6. UNDER KITCHEN EQUIPMENT WORK OF DIVISION 11, FURNISH AND INSTALL ALL INDIRECT WASTE LINES FROM EQUIPMENT LOCATED AT CUSTOM COUNTERS. USE COPPER TUBING AND PAINT VISIBLE LINES. NO PVC PIPING IS ACCEPTABLE.
7. UNDER KITCHEN EQUIPMENT WORK OF DIVISION 11, PROVIDE FAUCETS AT EQUIPMENT. UNDER PLUMBING WORK OF DIVISION 22, INSTALL AND CONNECT FAUCETS.
8. UNDER PLUMBING WORK OF DIVISION 22, FURNISH AND INSTALL CHROME PLATED VACUUM BREAKERS OR BACKSYPHONING DEVICES ON SUPPLY LINES TO EQUIPMENT AS REQUIRED BY CODES.
9. UNDER PLUMBING WORK OF DIVISION 22, FURNISH AND INSTALL STAINLESS STEEL OR CHROME PLATED ESCUTCHEON PLATES FOR ALL WATER LINES PENETRATING COUNTER TOPS AND BACK SPLASHES.
10. UNDER PLUMBING WORK OF DIVISION 22, FURNISH PRESSURE REDUCING VALVE FOR ALL GAS, STEAM, AND WATER LINES. MAXIMUM WATER PRESSURE AT BOOSTER HEATER AND DISHWASHER SHALL BE 20 PSI.
11. UNDER KITCHEN EQUIPMENT WORK OF DIVISION 11, FURNISH AND INSTALL WALK-IN COLD STORAGE ROOM EVAPORATOR COPPER DRAIN LINES. TRAP AT OUTLET END.
12. UNDER KITCHEN EQUIPMENT WORK OF DIVISION 11, FURNISH GAS QUICK DISCONNECT ASSEMBLIES WITH CABLE RESTRAINTS FOR EACH GAS FIRED COOKING APPLIANCE.
13. UNDER PLUMBING WORK OF DIVISION 22, PROVIDE 110 DEGREE HOT WATER SUPPLY AT WAREWASHER/ BOOSTER HEATER AND HOSE REEL AS SHOWN. VERIFY REQUIRED TEMPERATURE FOR SUPPLY AT SINK FAUCETS WITH LOCAL AND NATIONAL CODES.
14. UNDER PLUMBING WORK OF DIVISION 22, FURNISH AND INSTALL A SOLENOID VALVE ON PRIMARY GAS SUPPLY TO SHUT-OFF EQUIPMENT DUDRING FIRE SYSTEM ACTIVATION. SOLENOID SHALL BE ACCESSIBLE FOR SERVICING, TESTING, AND RESETTING IN THE EVENT OF SYSTEM ACTIVATION.
15. SEE PLUMBING AND MECHANICAL DRAWINGS FOR ADDITIONAL REQUIREMENTS.

PLUMBING/MECHANICAL SYMBOL LEGEND

COLD WATER	
HOT WATER	
WASTE	
FLOOR DRAIN	
FLOOR SINK	

FOOD SERVICE PLUMBING PLAN, LEVEL 1
SCALE: 1/4" = 1'-0"
NORTH

HALLIDAY ASSOCIATES
656 NW NORWOOD
CAMAS, WASH. 98607
360 — 834 — 6657
FAX 360 — 834 — 5453
FOOD FACILITY CONSULTANTS
SPACE PLANNING • DESIGN

KEY PLAN

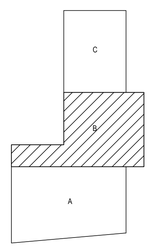

NORTH

BID/PERMIT SET

Food Service Plumbing Plan
ACMA
BEAVERTON SCHOOL DISTRICT

FS1.2
74-18109-00
03/14/19
REVISIONS

DLR Group
Architecture Engineering Planning Interiors

©2019 DLR Group Architecture & Engineering Inc., an Oregon corporation. ALL RIGHTS RESERVED

C:\Revit\74-18109-00_ACMA_AR_2018_Central_jgooding@dlrgroup.com.rvt
2/23/2018 12:12:44 PM

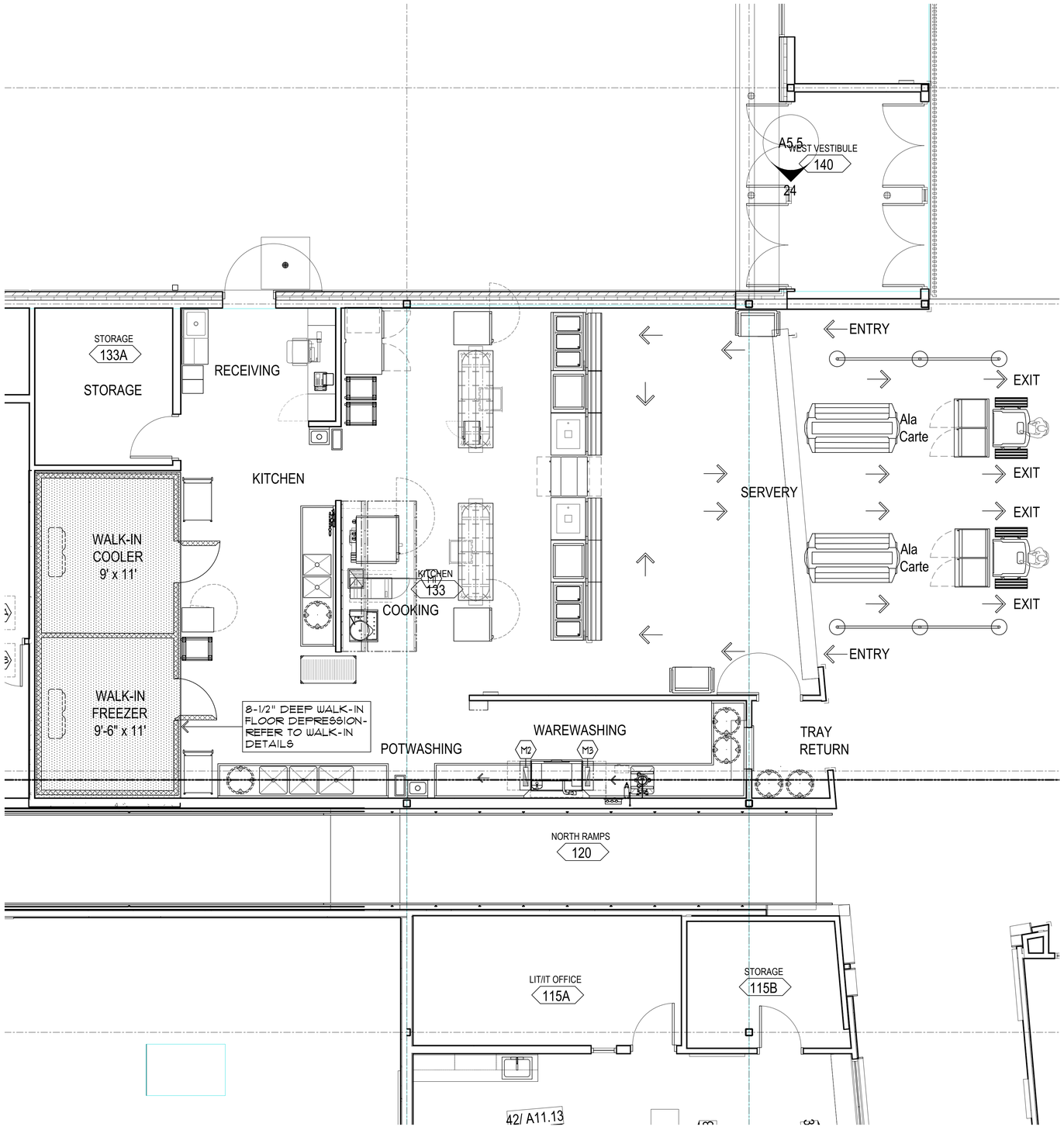

MECHANICAL NOTES

M1. ONE (1) 15" X 12" TYPE II EXHAUST DUCT CONNECTION AT CANOPY HOOD. 1842 CFM WITH Ø.59" STATIC PRESSURE AT DUCT COLLAR.

M2. ONE (1) 4" X 16" EXHAUST DUCT CONNECTION AT WAREWASHER UNLOAD END. 400 CFM WITH .25" STATIC PRESSURE AT DUCT COLLAR.

M3. ONE (1) 4" X 16" EXHAUST DUCT CONNECTION AT WAREWASHER LOAD END. 200 CFM WITH .25" STATIC PRESSURE AT DUCT COLLAR.

DEPRESS./MECHANICAL SYMBOL LEGEND

EXHAUST DUCT

FLOOR DEPRESSION

FOOD SERVICE MECHANICAL PLAN, LEVEL 1

NORTH

SCALE: 1/14" = 1'-0"

KEY PLAN

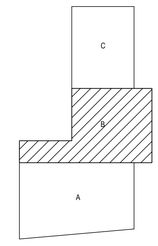

NORTH

HALLIDAY ASSOCIATES
656 N.W. NORWOOD
CAMAS, WASH. 98607
360 834-6657
FAX 360 - 834 - 5453
FOOD FACILITY CONSULTANTS
SPACE PLANNING & DESIGN

BID/PERMIT SET

Food Service Mechanical Plan
ACMA
BEAVERTON SCHOOL DISTRICT

FS1.3
74-18109-00
03/14/19
REVISIONS

DLR Group
Architecture Engineering Planning Interiors

© 2019, DLR Group Architecture & Engineering Inc., an Oregon corporation, ALL RIGHTS RESERVED

C:\Revit\74-18109-00_ACMA_AR_2018_Central_jgooding@dlrgroup.com.rvt
2/23/2018 12:12:44 PM

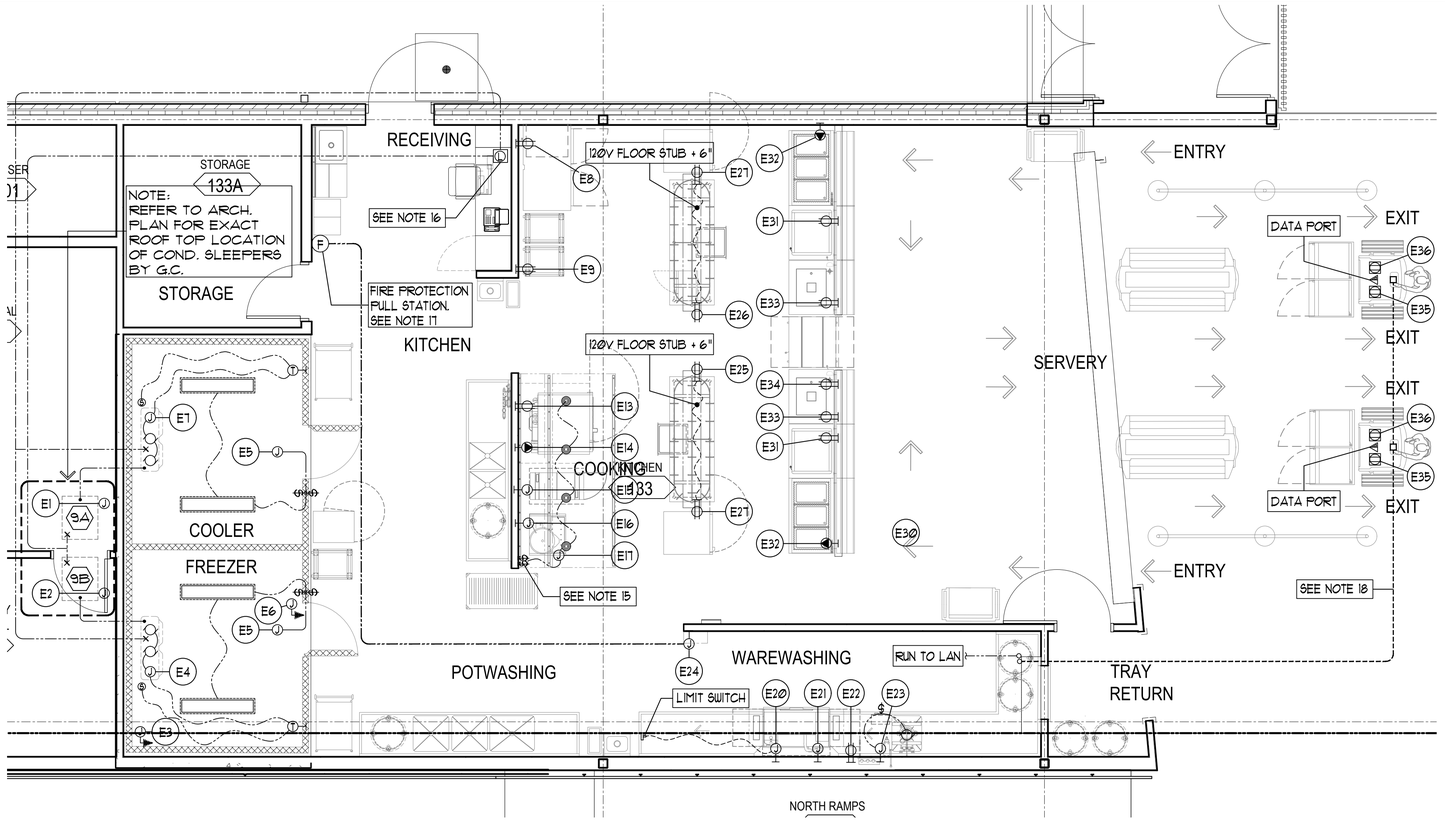

ELECTRICAL SCHEDULE

ITEM NO.	E.NO.	VOLTS	Ø	DESCRIPTION	LOC'N.	HEIGHT	SERVICE TO :	RATING	REMARKS
9	E1	208	3	J-BOX	GROUND	VERIFY	W.I. COOLER CONDENSING UNIT	1 HP	SYSTEM A - BEACON SYSTEM
9	E2	208	3	J-BOX	GROUND	VERIFY	W.I. FREEZER CONDENSING UNIT	2 1/2 HP	SYSTEM B - BEACON SYSTEM
8	E3	120	1	J-BOX	CEILING	---	WALK-IN DRAIN LINE HEATER	500 W	---
9	E4	120	1	J-BOX	CEILING	---	WALK-IN COOLER EVAPORATOR	2 AMPS	SYSTEM A - BEACON SYSTEM
8	E5	120	1	J-BOX	CEILING	---	(2) WALK-IN LIGHTS	160 W	80 W EACH
8	E6	120	1	J-BOX	CEILING	---	WALK-IN DOOR HEATER	500 W	---
9	E7	208	1	J-BOX	CEILING	---	WALK-IN FREEZER EVAPORATOR	10 AMPS	SYSTEM B - BEACON SYSTEM
19	E8	120	1	DCO	WALL	71"	REACH-IN REFRIGERATOR	8. 2 AMPS	FURNISHED W/NEMA 5-15P
20	E9	120	1	DCO	WALL	36"	MOBILE HOT HOLDING CABINET	12 AMPS	FURNISHED W/NEMA 5-15P
---	E10	---	--	NOT USED	---	---	---	---	---
---	E11	---	--	NOT USED	---	---	---	---	---
---	E12	---	--	NOT USED	---	---	---	---	---
25	E13	120	1	DCO	WALL	33"	CONVECTION OVEN	6 AMPS	FURNISHED W/NEMA 5-15P
25	E14	208	1	SCO	WALL	38"	COMBI-OVEN STEAMER	12 AMPS	FURNISHED W/NEMA 6-15P
26	E15	208	1	J-BOX	WALL	18"	BOIL COOK TOP	6 KW	---
27	E16	208	3	J-BOX	WALL	35"	12-GALLON TILTING KETTLE WITH STAND	34. 1 AMPS	HIGH WATTAGE
23	E17	120	1	J-BOX	CEILING	---	(4) CANOPY HOOD LIGHTS	320 W	80W EACH
---	E18	---	--	NOT USED	---	---	---	---	---
---	E19	---	--	NOT USED	---	---	---	---	---
37	E20	208	3	J-BOX	WALL	64"	WAREWASHER (TANK HEAT/MOTORS)	2 1/6 HP	& 15 KW. INTERCONNECT WITH LIMIT SWITCH
37	E21	208	3	J-BOX	WALL	64"	WAREWASHER BOOSTER HEATER	30 KW	---
37	E22	120	1	DCO	WALL	64"	WAREWASHER DETERGENT FEED	1440 W	DEDICATED CIRCUIT
39	E23	208	3	J-BOX	WALL	14"	DISPOSER	2 HP	CONNECTIONS TO DISPOSER, SOLENOID & SWITCH
23	E24	120	1	J-BOX	WALL	102"	FIRE PROTECTION SYSTEM	1 KW	---
---	E25	120	1	DCO	FIXTURE	34"	CONVENIENCE	1440 W	DEDICATED CIRCUIT. EXTEND FROM FLOOR STUB
22	E26	120	1	DCO	FIXTURE	34"	MICROWAVE OVEN	13. 4 AMPS	FURNISHED WITH NEMA 5-15P. EXTEND FROM FLOOR STUB
20	E27	120	1	DCO	FIXTURE	34"	MOBILE HOT HOLDING CABINET	12 AMPS	FURNISHED WITH NEMA 5-15P. EXTEND FROM FLOOR STUB
---	E28	---	--	NOT USED	---	---	---	---	---
---	E29	---	--	NOT USED	---	---	---	---	---
---	E30	---	--	NOT USED	---	---	---	---	---
43	E31	120	1	DCO	WALL	24"	HEATED PASS-THRU GRAB 'N GO CASE	13. 7 AMPS	FURNISHED W/NEMA 5-15P
44	E32	120/208	1	SCO	WALL	24"	HOT/COLD FOOD SERVING COUNTER	26. 25 AMPS	VERIFY NEMA CONFIG. INCLUDES LITE & HEAT LAMP WIRED TO SWITCH. RUN THRU F. G. POST
45	E33	120	1	DCO	WALL	24"	COLD FOOD SERVING COUNTER	8 AMPS	FURNISHED WITH NEMA 5-15P. INCLUDES LITE WIRED TO SWITCH. RUN THRU F. G. POST
46	E34	120	1	DCO	WALL	24"	MOBILE REFRIGERATED MILK COOLER	4 AMPS	FURNISHED WITH NEMA 5-15P
50, 51	E35	120	1	FLOOR BOX	FLOOR	Ø"	R. I. REFRIGERATED MERCHANDISING CASE &	9 AMPS	MERCHANDISING FREEZER- EACH FURNISHED WITH NEMA5-15P
53	E36	120	1	FLOOR BOX	FLOOR	Ø"	POINT OF SALE SYSTEM	1 KW	ISOLATED AND DEDICATED

SYMBOLS

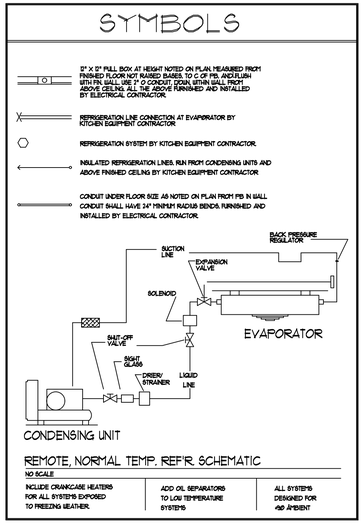

FIRE PROTECTION LEGEND

FIRE PROTECTION SYSTEM MANUAL PULL (F)

NOTE:
LOCATE MANUAL FIRE SUPPRESSION PULL STATIONS PER CODES - DEVICES TO BE LOCATED A MINIMUM OF 10 FEET AND A MAXIMUM OF 20 FEET FROM THE KITCHEN EXHAUST SYSTEM IT SERVES. E.C. TO PROVIDE OCTAGON BOX AND RUN EMPTY CONDUIT TO FIRE SUPPRESSION CONTROL HEAD. MINIMUM 12" RADIUS BENDS IN ANY CHANGE OF DIRECTION. SET PULL STATION BOX @ +48" AFF. TO CENTERLINE. TYPICAL ALL LOCATIONS

ELECTRICAL NOTES

1. THIS DRAWING IS NOT TO BE USED FOR ESTABLISHING ROUGH-IN LOCATIONS. REFER TO DIMENSIONED DRAWINGS PREPARED BY THE KITCHEN EQUIPMENT CONTRACTOR.
2. UNDER ELECTRICAL WORK OF DIVISION 26, PROVIDE ALL ROUGH-INS AND FINAL CONNECTIONS IN CONFORMANCE WITH LOCAL CODES.
3. HOOD LIGHTS ARE FURNISHED UNDER KITCHEN EQUIPMENT, DIVISION 11. UNDER ELECTRICAL WORK OF DIVISION 26, FURNISH AND INSTALL SWITCHES AND FURNISH AND INSTALL ALL INTERCONNECTING CONDUIT AND WIRING CONCEALED FROM SIGHT.
4. UNDER ELECTRICAL WORK OF DIVISION 26, FURNISH AND INSTALL ALL INTERCONNECTING WIRING ACROSS CEILING AS REQUIRED BETWEEN HOODS AND HOOD FIRE CONTROL PANEL.
5. WALK-IN COLD STORAGE ROOMS, LIGHTS, AND CEILING MOUNT EVAPORATORS ARE FURNISHED AND INSTALLED UNDER KITCHEN EQUIPMENT, DIVISION 11. UNDER ELECTRICAL WORK OF DIVISION 26, FURNISH AND INSTALL ALL INTERCONNECTING CONDUIT AND WIRING ABOVE CEILING CONCEALED FROM SIGHT.
6. ALL ELECTRICAL RECEPTACLES SHALL BE MOUNTED HORIZONTALLY ON FIXTURES AND WALLS.
7. ALL EVAPORATOR MOTOR CONNECTIONS SHALL BE MADE WITH CONDUIT TO A J-BOX. PLUG-IN TYPE CONNECTIONS WILL NOT BE ACCEPTED.
8. COLD STORAGE ROOM EVAPORATOR DRAIN LINES (INCLUDING HEAT TAPE FOR FREEZER DRAIN) ARE FURNISHED AND INSTALLED UNDER KITCHEN EQUIPMENT, DIVISION 11. TRAP AT OUTLET END.
9. REFRIGERATION, HIGH PRESSURE WASH SYSTEM, AND BEVERAGE LINES SHOWN ARE SCHEMATIC ONLY AND SHALL BE ADJUSTED TO FIT BUILDING CONDITIONS.
10. UNDER ELECTRICAL WORK OF DIVISION 26, PROVIDE ALL DISCONNECTS, INTERLOCKS, AND CONTRACTORS REQUIRED BY LOCAL CODES.
11. UNDER ELECTRICAL WORK OF DIVISION 26, FURNISH AND INSTALL SHUNT TRIP CIRCUIT BREAKERS TO SHUT OFF POWER SUPPLY TO ALL ELECTRICAL COOKING EQUIPMENT DURING FIRE SYSTEM ACTIVATION.
12. UNDER WORK OF KITCHEN EQUIPMENT, DIVISION 11, FURNISH AND INSTALL STAINLESS STEEL OR CHROME PLATED ESCUTCHEON PLATES FOR ALL ELECTRICAL CONNECTIONS PENETRATING COUNTER TOPS FOR BELOW COUNTER PLUG-INS.
13. UNDER ELECTRICAL WORK OF DIVISION 26, FURNISH AND INSTALL ALL INTERCONNECTING WIRING AS REQUIRED BETWEEN BOOSTER HEATER AND DISHWASHER.
14. UNDER ELECTRICAL WORK OF DIVISION 26, FURNISH AND INSTALL ALL INTERCONNECTING WIRING BETWEEN WAREWASHER CONTROL PANEL AND EXHAUST FAN FOR AUTO FAN ON/OFF DURING EQUIPMENT OPERATION. SET FAN TO CONTINUE TO RUN AN EXTRA 20 MINUTES AFTER WAREWASHER IS TURNED-OFF.
15. UNDER ELECTRICAL WORK OF DIVISION 26, PROVIDE POWER TO HOOD LIGHTS AND EXHAUST FAN ON ROOF- INTERLOCK WITH MAKE-UP AIR SUPPLY UNIT PER PER MECHANICAL ENG. PLANS. PROVIDE WALL SWITCH WITH PILOT LIGHT @ 48" ABOVE FINISHED FLOOR.
16. REFRIGERATION BEACON SYSTEM CONTROLLER, FURNISHED BY DIVISION 11, SHALL MONITOR WALK-IN EVAPORATORS & CONDENSING UNITS. UNDER ELECTRICAL WORK OF DIVISION 26 PROVIDE POWER FROM EVAPORATOR COILS USING 24V 18 GA. LOW VOLTAGE WIRING.
17. UNDER KITCHEN WORK OF DIVISION 11 LOCATE MANUAL FIRE SUPPRESSION PULL STATION PER CODES. PROVIDE OCTAGON BOX AND RUN EMPTY CONDUIT TO FIRE SUPPRESSION CONTROL HEAD. MINIMUM 12" RADIUS BENDS IN ANY CHANGE OF DIRECTION. SET PULL STATION BOX @ +48" AFF. TO CENTER LINE.
18. RUN 1" DIA. CONDUIT FOR ISOLATED & DEDICATED CASH SYSTEM COMMUNICATION LINES UNDER SLAB TO WALL. RUN UP WALL AND ACROSS CEILING. CONNECT TO MANAGERS STATION COMPUTER. VERIFY ALL SYSTEM REQUIREMENTS FOR OWNER SUPPLIED EQUIPMENT.

ELECTRICAL SYMBOL LEGEND

DCO (DUPLEX CONVENIENCE OUTLET)	
J-BOX (JUNCTION BOX)	
SCO	
THERMOSTAT	
SOLENOID	S
MOTOR	
SWITCH(S)	
LIGHT	
FLOOR OR CEILING STUB (AS NOTED)	
FLOOR BOXES - PROVIDE PER DISTRICT STANDARDS	

KEY PLAN

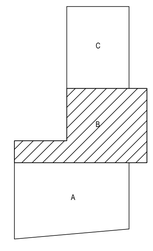

HALLIDAY ASSOCIATES
656 NW NORWOOD
CAMAS, WASH. 98607
360 — 834 — 6557
FAX 360 — 834 — 5453
FOOD FACILITY CONSULTANTS
SPACE PLANNING • DESIGN

FOOD SERVICE ELECTRICAL/REFRIGERATION PLAN, LEVEL 1
SCALE: 1/14" = 1'-0"
NORTH

BID/PERMIT SET

Food Service Electrical/Refrigeration Plan
ACMA
BEAVERTON SCHOOL DISTRICT

FS1.4
74-18105-00
03/14/19
REVISIONS

DLR Group
Architecture Engineering Planning Interiors

© 2019, DLR Group Architecture & Engineering Inc., an Oregon corporation, ALL RIGHTS RESERVED

C:\Revit\74-18109-00_ACMA_AR_2018_Central_jgooding@dlrgroup.com.rvt
2/23/2018 12:12:44 PM

GENERAL NOTES FOR VENTILATORS

PLUMBING (if applicable)

1. 140°F min. to 180°F max. hot water required to Control Cabinet.
2. Water flow pressure 40 psi min. to 80 psi max. at Control Cabinet.
3. Ventilator drains must be connected to building drains as per local codes.
4. Refer to drawing notes for total water consumption. Average cleaning cycle time: 3 minutes for light duty equipment, 5 minutes for medium duty equipment and 9 minutes for heavy duty equipment.

BACK FLOW PROTECTION (if applicable)

5. A reduced pressure principle device back flow preventer is furnished within the Control Cabinet, as illustrated by the drawing, unless otherwise noted.

ELECTRICAL

6. Provide dedicated electrical service to the ventilator control cabinet (if applicable) or locate Fan Start/Stop Switch in a convenient location. Refer to the wiring diagram for required voltage.
7. If ventilators are equipped with light fixtures, provide a separate light circuit to the ventilator as shown on electrical plan.

EXHAUST VOLUME REQUIREMENTS

8. Exhaust Volumes as shown on the drawings are determined by established Gaylord engineering methods and in accordance with the terms of the ventilator's listing. These air volume levels require that the make-up air be brought into the space in such a way that it does not negatively affect the ventilator. See the Make-up Air Requirements and the "Typical Design" drawing.
9. Ventilator static pressure is noted on each ventilator plan view. Total duct system and other external static's must be added to the ventilator static for determining the total system static pressure drop. Static based on operation at mean sea level at 75°F kitchen ambient.

MAKE-UP AIR REQUIREMENTS

10. Make-up air is critical to the performance of the ventilator.
11. The total amount of make-up air (supply air) brought into the kitchen must be between 90% and 100% of the total exhaust volume. It should be brought in throughout the kitchen evenly for best results. See the "Typical Design" drawing.

AIR FLOW RATES

12. Exhaust and Supply Air Flow Rates were established under controlled laboratory conditions. Greater Exhaust and/or lesser Supply Air Flows may be required for complete vapor removal in specific installations.

INSTALLATION

13. Ventilators to be installed in accordance with NFPA-96 and all other local applicable codes. Contractors must review applicable codes with code authorities before approving drawings for fabrication. Special attention must be given to code regulations relative to clearances from surrounding combustible and limited combustible construction (walls, ceiling, etc.).
14. Ventilators manufactured in multiple sections are factory pre-wired to a single connection point. Ventilator wiring is disconnected for shipment to be reconnected by electrical contractor.
15. Ventilators manufactured in multiple sections may have drains factory interconnected (see drawing) to a single outlet point. Ventilator plumbing is disconnected for shipment to be reconnected by plumbing contractor.
16. All ductwork beyond the ventilator duct take-off collar to be provided and installed by others, in accordance with applicable codes. Exhaust ducts must be continuously welded liquid tight.
17. All ventilators are equipped with hanging brackets. Hanging rods to be supplied by ventilator installer. Hanging weight of the ventilator(s) is noted on each drawing.
18. Ventilators manufactured in multiple sections are provided with bolts, clips, and all necessary hardware for reconnecting by the ventilator installer.

CONSTRUCTION

19. Ventilators are manufactured in strict accordance with Gaylord specifications.
20. Ventilators constructed of 18 Ga. stainless steel, Type 300 series, No. 4 finish unless otherwise noted on drawings.

FIRE EXTINGUISHING SYSTEM

21. Fire extinguishing system to be installed in accordance with NFPA-96. Refer to "FIRE PROTECTION SYSTEM NOTES" for information on supplier and installation.
22. Caution: Fire extinguishing system piping installed on the ventilator at job site should be coordinated with Gaylord to ensure piping does not interfere with the ventilator's operation/performance. Improper installation may void the Listings of the ventilator.
23. IMPORTANT NOTE: NFPA-96 requires that all gas and electric cooking equipment, that is protected by surface fire protection, must automatically shut off upon activation of the fire extinguishing system.
24. IMPORTANT NOTE: Most building departments require separate hood and fire protection permits prior to installation. The hood permit is typically obtained through the plan review department and the fire protection permit from the fire prevention bureau. It is the responsibility of the installing contractor to check with local building departments for their requirements and to obtain necessary permits.

LIGHTING

25. Light fixtures in ventilators will provide less than 30 foot candles of light at the cooking surface as a standard, unless otherwise noted on Drawings. Confirm if this amount of light is acceptable with local health codes.

FINISH CEILING

26. Exact floor to structural ceiling and floor to finish ceiling heights must be verified for ventilator design. Incorrect heights may cause the ventilator to not fit properly or comply with clearances specified in applicable codes and standards.

SPACE CONDITIONS IN HOT AND HUMID CLIMATES / STEAM COOKING EQUIPMENT

Gaylord recommends the kitchen temperature be kept between 74°F to 79°F with a dew point not exceeding 55°F to prevent excess condensation and or dripping in the hood over heavy steam producing equipment such as Steamers, Kettles, Dim Sum Counters, etc. If this is not possible, please consult the factory for increased air volume levels to prevent condensation buildup and potential dripping. Please refer to ASHRAE STD's 62.1-2010, 55-2010, and "The ASHRAE Guide for Buildings in Hot & Humid Climates" to address occupancy comfort and reduce the growth of pathogenic or allergenic organisms. It should be noted that exceeding these values can result in increased potential for unsanitary conditions.

THE GAYLORD VENTILATOR TESTING, LISTING AND COMPLIANCE REFERENCES:

IMPORTANT NOTE: Gaylord Ventilators are designed to meet the National codes listed below. Local codes may vary. Gaylord Industries must be notified in writing of local codes that may affect the ventilator design.

NATIONAL FIRE PROTECTION ASSOCIATION
The exhaust ventilator meets all requirements of the latest edition of NFPA-96.

SANITATION LISTING
The exhaust ventilator is listed to:
NSF Standard #2 - "Food Service Equipment"

INTERNATIONAL & UNIFORM MECHANICAL CODE
The exhaust ventilator meets all requirements of IMC and UMC.

INTERTEK TESTING SERVICES
The exhaust ventilator is ETL Listed. *

* ETL listed exhaust ventilators are tested to standard:
UL 710 - "Exhaust Hoods for Commercial Cooking Equipment".

Intertek Intertek

APPROVAL NOTICE

Prior to releasing the ventilator for fabrication, this drawing must be signed by an authorized representative of the company ordering the equipment and returned to GAYLORD INDUSTRIES. By approving these drawings, the company ordering the equipment agrees to the general notes, accepts the equipment as shown, and has verified the following have been checked:

IMPORTANT NOTICE

1. All dimensions such as duct size and location, drain and hot water location, ceiling height, overall size of ventilator, clearances to beams and other obstructions.
2. The location of the cooking equipment in relation to the ventilator is correct as shown for proper placement of the surface fire protection nozzles.

APPROVED FOR FABRICATION

Any changes in cooking equipment location, necessitating the relocation of the surface fire protection nozzles must be brought to the attention of GAYLORD INDUSTRIES in writing, prior to the kitchen being turned over to operating personnel.

☐ Revise and Resubmit

☐ Without changes
☐ With changes as shown

Signature Date

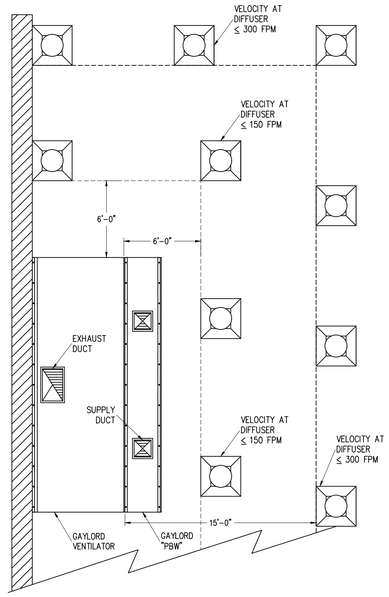

Gaylord Capture Performance Guarantee

Gaylord warrants the Capture Performance of the ventilator, only if the Exhaust Air Volumes are correct, per the Exhaust Air Volume Guidelines, and the Make-up Air Volumes are correct and the make-up air is delivered correctly, per the Make-up Air Delivery Guidelines as stated below.

Exhaust Air Volume Guidelines:

1. The amount of air exhausted by the Gaylord Ventilator shall be between 100% and 110% of the values shown on the Plan View for the Exhaust Ducts for each ventilator

Make-up Air Delivery Guidelines:

1. Gaylord "PBW" Plenum boxes shall be included for each ventilator
2. The amount of make-up air delivered through the Gaylord "PBW" plenum boxes shall be between 90% and 100% of the values shown on the Plan View for the Supply Ducts for each ventilator
3. The make-up air delivered using Gaylord "PBW" plenum boxes shall not exceed 60% of the exhaust volume of the ventilator
4. Ceiling diffusers shall be at least 6'-0" from all sides of the ventilator and the velocity at the diffuser shall not exceed 150 Feet per Minute (FPM)
   OR
   Ceiling diffusers shall be 15'-0" from all sides of the ventilator and the velocity at the diffuser shall not exceed 300 Feet per Minute (FPM)
5. The maximum velocity of the make-up air from Transfer Air, Diffusers, etc. shall not exceed 75 FPM at the ventilator lip
6. Cross drafts from pass through windows, hallways, or other openings shall not exceed 50 FPM
7. All forms of make-up air introduction (PBW, Transfer Air, Diffusers, etc.) must be evenly distributed around each ventilator to prevent unequal pressurization
8. Kitchen pressurization shall not exceed -0.02"W.G. relative to the dining or adjacent spaces, as stated in NFPA-96 and ASHRAE Standard 154
9. For more information on acceptable methods of Make-up Air Delivery reference ASHRAE Standard 154.

Following these guidelines will result in proper capture and containment at the ventilator and enact the Gaylord Capture Performance Guarantee. If jobsite conditions cannot accommodate these guidelines, consult factory for alternative design.

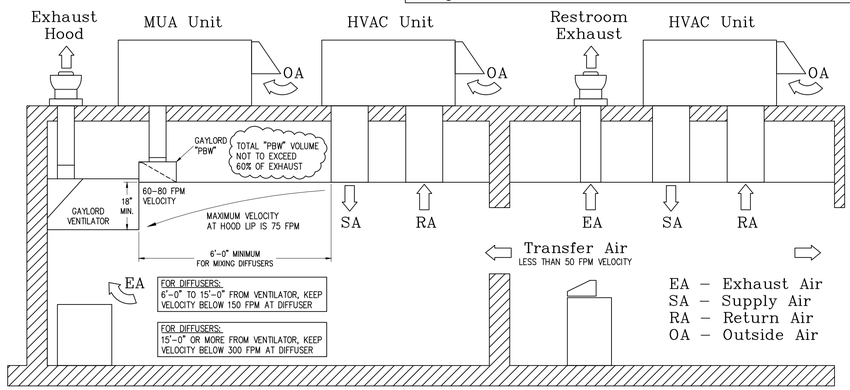

TYPICAL DESIGN

REV	DRWN.BY	DATE	REVISIONS	CHECKED BY
00	JLA	11/18/2018	NO CHANGE	

This plan is made from available information, but measurements are to be verified by contractors, installers and others in connection with this job. Gaylord Industries accepts no responsibility for work done by contractors, installers and others, and will not stand any expense for changes made necessary by local building codes, ordinances, structural conditions or by the substitution or changes in equipment shown in this plan. This plan must be verified and approved by proper parties before fabrication can be started and approval shall not be made unless contractors, installers and others have reviewed applicable codes with code authorities. Reference is made to the general notes, which are a part of these plans and all contractors, installers and others utilizing these plans are advised they are responsible for examining and becoming familiar with said general notes before commencing any work hereunder. Any inconsistencies between these plans and the general notes, or between these plans, the general notes, and local building codes or ordinances must be immediately called to the attention of Gaylord Industries in writing so that any such inconsistencies can be resolved.

Gaylord Industries must be notified of any changes made to the plan in a clear and conspicuous manner. Gaylord Industries will not be responsible for any incidental or consequential damages incurred by others as a result of contractors, installers and others failure to notify Gaylord of changes to the plan.

ATTENTION – This plan is the property of Gaylord Industries and is confidential and proprietary. It is not to be copied, reproduced, or distributed, in whole or part, nor be used in anyway detrimental to Gaylord Industries. If you have received this plan without Gaylord's permission, please (i) do not read it, (ii) reply to the sender that you received the drawing in error, and (iii) erase and/or destroy the drawing.

GAYLORD® INDUSTRIES
10900 S.W. AVERY ST.
TUALATIN, OR 97062
TELEPHONE: (503) 691-2010
TOLL FREE: (800) 547-9696
FAX NO.: (503) 692-6048
E-MAIL: info@gaylordventilation.com

DIMENSION TOLERANCE ± 1/4" (6mm)

MODEL #		ITEM #	WORK ORDER #
DRAWN BY: JLA	CHECKED BY:	QUOTE VERSION #: 18-1156_00	

ARTS AND COMMUNICATION
BEAVERTON, OR

GAYLORD®

PROJECT NO.:	DATE:	REV.:	SHEET NO.:
18-1156	11/18/2018	00	001

FOOD SERVICE CANOPY HOOD DETAILS, LEVEL 1
SCALE: NONE

HALLIDAY ASSOCIATES
656 NW NORWOOD
CAMAS, WASH. 98607
360 834 6557
FAX 360 - 834 - 5453
FOOD FACILITY CONSULTANTS
SPACE PLANNING • DESIGN

KEY PLAN

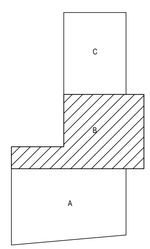

BID/PERMIT SET

Food Service Canopy Hood Details
ACMA
BEAVERTON SCHOOL DISTRICT

FS2.1
74-18109-00
03/14/19
REVISIONS

DLR Group
Architecture Engineering Planning Interiors

© 2019, DLR Group Architecture & Engineering Inc., an Oregon corporation, ALL RIGHTS RESERVED

C:\Revit\74-18109-00_ACMA_AR_2018_Central_jgooding@dlrgroup.com.rvt
2/23/2018 12:12:44 PM

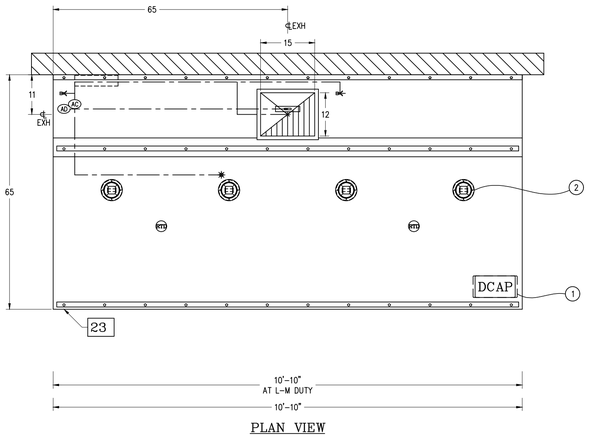

PLAN VIEW

HOOD INFORMATION

ITEM NO.	MODEL	MAXIMUM SIZE			AIR FLOW REQUIREMENTS							APPROX. WEIGHT (LBS)
					S.P. TEST PORT ("W.G.)	DUCT COLLAR						
		L (in)	D (in)	H (in)		DUCT TYPE	QTY	DUCT S.P. ("W.G.)	CFM (EACH)	SIZE L (in)	SIZE D (in)	
23	ELX	130	65	38	0.24	EXH	1	0.59	1842	15	12	912

TOTAL HOOD S.P.: 0.59
TOTAL EXHAUST: 1842
TOTAL SUPPLY: 0

APPROX. TOTAL WEIGHT: 1129

VENTILATOR NOTES (NON-WATER WASH)

A) VERIFY ALL MAKES AND MODELS OF COOKING EQUIPMENT AND LOCATION IN RELATION TO VENTILATOR PRIOR TO FABRICATION.

B) FRONT AND REAR MOUNTING BRACKETS HAVE Ø0.625" HOLES. BRACKETS TO BE SUPPORTED WITHIN 12" OF EACH END OF EACH SECTION, WITH A MAXIMUM SPAN OF 72" BETWEEN SUPPORTS.

C) INTERIOR MOUNTING BRACKET(S) TO BE SUPPORTED WITHIN 36" OF EACH END OF EACH SECTION, WITH A MAXIMUM SPAN OF 72" BETWEEN SUPPORTS.

LIGHTING NOTE

THIS LIGHTING IN THIS VENTILATOR IS DESIGNED TO PROVIDE 50 FOOT CANDLES OF LIGHT AT THE COOKING SURFACE, IF 50 FOOT CANDLES OF LIGHTING IS PROVIDED IN THE SURROUNDING SPACE.

VENTILATOR WIRING NOTES (NON-WATER WASH)

① (3) WIRES AND GROUND, FOR DCA CONTROL, IN FLEXIBLE CONDUIT, EXTENDING 6' BEYOND END OF VENTILATOR BY GAYLORD. WIRED TO SUPPLY VOLTAGE AND FAN ON/OFF SWITCH BY ELECTRICAL CONTRACTOR.

∗ LIGHT FIXTURES, VAPOR PROOF, U.L. LISTED, FURNISHED, INSTALLED AND WIRED BY GAYLORD. ∗

② (2) WIRES AND GROUND, FOR LIGHT(S), IN FLEXIBLE CONDUIT, EXTENDING 6' BEYOND END OF VENTILATOR BY GAYLORD. WIRED TO LIGHT SWITCH BY ELECTRICAL CONTRACTOR.

FIRE PROTECTION SYSTEM NOTES ANSUL R-102-ASEF

FP-1) LOCATION OF FIRE PROTECTION NOZZLES MUST BE VERIFIED IN RELATION TO THE COOKING EQUIPMENT, PRIOR TO VENTILATOR FABRICATION.

COMPLETE SYSTEM INCLUDING APPLIANCE DROPS AND SURFACE MOUNTED DETECTION BRACKETS, WITH FIELD INSTALLATION BY GAYLORD.

ANSUL FIRE SYSTEM FACTORY PRE-PIPED CHEMICAL LINES INCLUDING DUCT, PLENUM AND APPLIANCE DROPS WITH ALL NOZZLES INSTALLED PER COOKING EQUIPMENT ARRANGEMENT ON GAYLORD APPROVED DRAWINGS. ALL EXPOSED CHEMICAL PIPING CHROME PLATED OR CHROME SLEEVED. INCLUDES FACTORY PRE-PIPED DETECTION LINES WITH SURFACE MOUNTED DETECTOR BRACKETS. INSTALLATION BY CERTIFIED FACTORY INSTALLERS.

INCLUDES:
* TANK(S) AND RELEASE ASSEMBLY(S)
* CHEMICAL
* DETECTOR CABLE
* FUSIBLE LINKS WITH LINKAGE
* EXPELLANT GAS CARTRIDGE(S) (PROVIDED BY FIRE PROTECTION INSTALLER)
* (1) REMOTE MANUAL PULL STATION
* (1) GAS VALVE REQUIRED – REVIEW GAYLORD QUOTE TO DETERMINE IF PROVIDED BY GAYLORD.
* (1) MANUAL RESET RELAY PER FIRE SYSTEM, IF REQUIRED
* PLANS AND PERMITS (ON JOBS INSIDE OF THE UNITED STATES AND NON-MARINE JOBS)
* PARTS AND INSTALLATION OF CHEMICAL AND DETECTION LINES FROM TANK(S) TO CONNECTION POINTS ON HOOD
* INSTALLATION OF TANKS AND RELATED COMPONENTS
* INSTALLATION OF DETECTOR CABLE AND FUSIBLE LINKS
* INSTALLATION OF REMOTE MANUAL PULL STATION
* JOB SITE REPOSITIONING OF NOZZLES AS PER GAYLORD APPROVED DRAWINGS, IF REQUIRED TO MEET SYSTEM DESIGN REQUIREMENTS
* TRIP TEST AND CERTIFICATION (ON JOBS INSIDE OF THE UNITED STATES AND NON-MARINE JOBS)

EXCLUDES:
* UNION LABOR AND PREVAILING WAGE
* INSTALLATION OF GAS VALVE(S)
* ELECTRICAL DISCONNECTS
* PARTS AND LABOR FOR ANY ELECTRICAL INTERCONNECTIONS
* JOB SITE REPOSITIONING OF NOZZLES IF COOKING EQUIPMENT IS NOT INSTALLED PER GAYLORD APPROVED DRAWINGS
* PLANS AND PERMITS ON JOBS OUTSIDE OF THE UNITED STATES AND ON MARINE JOBS
* TRIP TEST AND CERTIFICATION ON JOBS OUTSIDE OF THE UNITED STATES AND ON MARINE JOBS
* HANDHELD FIRE EXTINGUISHER(S)
* INSPECTION AND SERVICING
* RECESSED ANSUL CABINET(S)

FIRE PROTECTION INLET NOTES

(AK) IS THE ANSUL FUSE LINK DETECTOR CABLE INLET.
(AC) IS THE ANSUL CHEMICAL TANK INLET.
* SEE ANSUL TANK DIAGRAM FOR DETAILS *

"CAPTURE WALL" INSTALLATION DETAILS

1) INSTALL VENTILATOR.
2) REMOVE 2"x4" SHIPPING BLOCK FROM BOTTOM OF VENTILATOR.
3) SECURE BOTTOM VENTILATOR FLANGE TO STRUCTURAL WALL USING #10 SCREWS (MIN.) ON A MAXIMUM OF 32" CENTERS. (SEE DETAIL #1)
4) ATTACH "CAPTURE WALL" TO VENTILATOR USING SCREWS AND CAGE NUTS PROVIDED AT PRE-DRILLED LOCATIONS.
5) SECURE BOTTOM OF "CAPTURE WALL" TO STRUCTURAL WALL USING #10 SCREWS (MIN.) ON A MAXIMUM OF 32" CENTERS. (SEE DETAIL #3)
6) IF LOCAL JURISDICTION ALLOWS: INSTALLER TO APPLY SILICONE CAULK ON ALL JOINTS CONNECTING TO BUILDING WALL AND VERTICAL SEAMS (IF APPLICABLE).

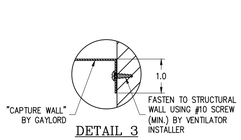

DETAIL 2

DETAIL 3

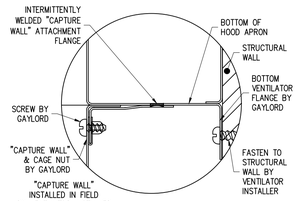

DETAIL 1

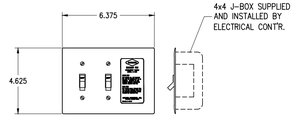

FAN ON-OFF SWITCH/LIGHT SWITCH
Model C-150-LS
(WALL MOUNTED BY ELECTRICAL CONTRACTOR)

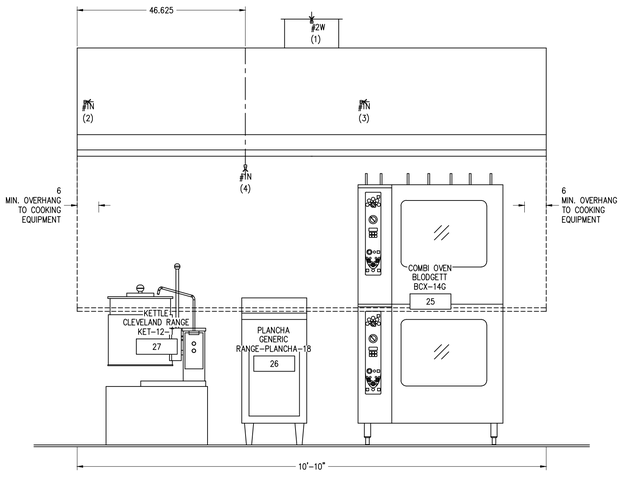

ELEVATION VIEW

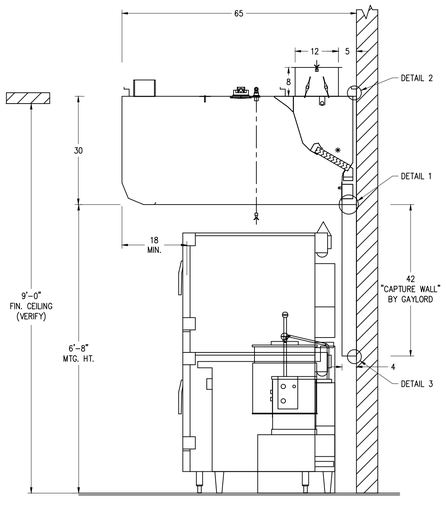

SECTION VIEW

WARNING: ANY CHANGES IN THE HOOD DESIGN OR MAKES/MODELS OF COOKING EQUIPMENT MAY AFFECT THE SIZE OF AND/OR REQUIRED AIRFLOWS FOR THE HOOD. NOTE: COOKING EQUIPMENT MODEL, MANUFACTURER & LOCATION MUST BE VERIFIED FOR FIRE PROTECTION PRIOR TO FABRICATION.

DIMENSION TOLERANCE ± 1/4" (6mm)

REV	DRWN.BY	DATE	REVISIONS	CHECKED BY
00	JLA	11/18/2018	INITIAL DRAWING	

This plan is made from available information, but measurements are to be verified by contractors, installers and others in connection with this job. Gaylord Industries accepts no responsibility for work done by contractors, installers and others, and will not stand any expense for changes made necessary by local building codes, ordinances, structural conditions or by the substitution or changes in equipment shown in this plan. This plan must be verified and approved by proper parties before fabrication can be started and approval shall not be made unless contractors, installers and others have reviewed applicable codes with code authorities. Reference is made to the general notes, which are a part of these plans and all contractors, installers and others utilizing these plans are advised they are responsible for examining and becoming familiar with said general notes before commencing any work hereunder. Any inconsistencies between these plans and the general notes, or between these plans, the general notes, and local building codes or ordinances must be immediately called to the attention of Gaylord Industries in writing so that any such inconsistencies can be resolved.

Gaylord Industries must be notified of any changes made to the plan in a clear and conspicuous manner. Gaylord Industries will not be responsible for any incidental or consequential damages incurred by others as a result of contractors, installers and others failure to notify Gaylord of changes to the plan.

ATTENTION – This plan is the property of Gaylord Industries and is confidential and proprietary. It is not to be copied, reproduced, or distributed, in whole or part, nor be used in anyway detrimental to Gaylord Industries. If you have received this plan without Gaylord's permission, please (i) do not read it, (ii) reply to the sender that you received the drawing in error, and (iii) erase and/or destroy the drawing.

GAYLORD® INDUSTRIES
10900 S.W. AVERY ST.
TUALATIN, OR 97062
TELEPHONE: (503) 691-2010
TOLL FREE: (800) 547-9696
FAX NO.: (503) 692-6048
E-MAIL: info@gaylordventilation.com

ANSUL R-102-ASEF-1T-4N	FP-23	18115602
ELX-GBD-DCA-65	23	18115601
MODEL #	ITEM #	WORK ORDER #

DRAWN BY:	CHECKED BY:	QUOTE VERSION #
JLA		18-1156_00

ARTS AND COMMUNICATION
BEAVERTON, OR

PROJECT NO.:	DATE:	REV.:	SHEET NO.:
18-1156	11/18/2018	00	002

GAYLORD®

HALLIDAY ASSOCIATES
656 NW NORWOOD
CAMAS, WASH. 98607
360 – 834 – 6657
FAX 360 – 834 – 5453
FOOD FACILITY CONSULTANTS
SPACE PLANNING • DESIGN

KEY PLAN

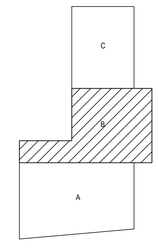

FOOD SERVICE CANOPY HOOD DETAILS, LEVEL 1

SCALE: NONE

BID/PERMIT SET

Food Service Canopy Hood Details
ACMA
BEAVERTON SCHOOL DISTRICT

FS2.2
74-18109-00
03/14/19
REVISIONS

DLR Group
Architecture Engineering Planning Interiors

© 2019, DLR Group Architecture & Engineering Inc., an Oregon corporation. ALL RIGHTS RESERVED

C:\Revit\74-18109-00_ACMA_AR_2018_Central_jgooding@dlrgroup.com.rvt
2/23/2018 12:12:44 PM

FIRE PROTECTION INFORMATION				
HOOD ITEM #	NOZZLE #	NOZZLE TYPE	NOZZLE FLOW POINTS	TANK #
23	1	#2W	2	1
23	2	#1N	1	1
23	3	#1N	1	1
23	4	#1N	1	1

ANSUL TANK SCHEMATIC

(FOR VENTILATOR(s): 23)

Method 1

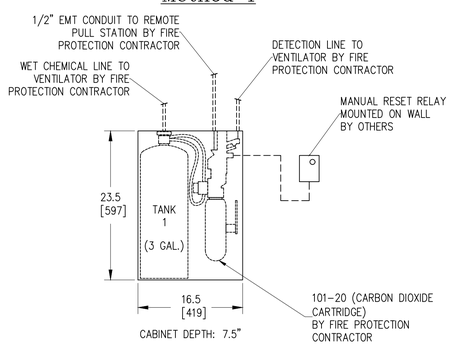

Method 2

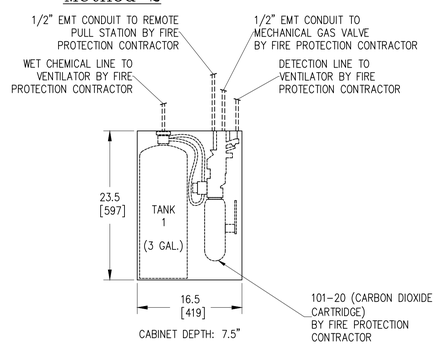

REV	DRWN.BY	DATE	REVISIONS	CHECKED BY
00	JLA	11/18/2018	INITIAL DRAWING	

This plan is made from available information, but measurements are to be verified by contractors, installers and others in connection with this job. Gaylord Industries accepts no responsibility for work done by contractors, installers and others, and will not stand any expense for changes made necessary by local building codes, ordinances, structural conditions or by the substitution or changes in equipment shown in this plan. This plan must be verified and approved by proper parties before fabrication can be started and approval shall not be made unless contractors, installers and others have reviewed applicable codes with code authorities. Reference is made to the general notes, which are a part of these plans and all contractors, installers and others utilizing these plans are advised they are responsible for examining and becoming familiar with said general notes before commencing any work hereunder. Any inconsistencies between these plans and the general notes, or between these plans, the general notes, and local building codes or ordinances must be immediately called to the attention of Gaylord Industries in writing so that any such inconsistencies can be resolved.

Gaylord Industries must be notified of any changes made to the plan in a clear and conspicuous manner. Gaylord Industries will not be responsible for any incidental or consequential damages incurred by others as a result of contractors, installers and others failure to notify Gaylord of changes to the plan.

ATTENTION – This plan is the property of Gaylord Industries and is confidential and proprietary. It is not to be copied, reproduced, or distributed, in whole or part, nor be used in anyway detrimental to Gaylord Industries. If you have received this plan without Gaylord's permission, please (i) do not read it, (ii) reply to the sender that you received the drawing in error, and (iii) erase and/or destroy the drawing.

GAYLORD® INDUSTRIES

10900 S.W. AVERY ST.
TUALATIN, OR 97062

TELEPHONE: (503) 691-2010
TOLL FREE: (800) 547-9696
FAX NO.: (503) 692-6048
E-MAIL: info@gaylordventilation.com

DIMENSION TOLERANCE
± 1/4" (6mm)

ANSUL R-102-ASEF-1T-4N	FP-23	18115602
ELX-GBD-DCA-65	23	18115601
MODEL #	ITEM #	WORK ORDER #

DRAWN BY:	CHECKED BY:		QUOTE VERSION #
JLA			18-1156_00

ARTS AND COMMUNICATION

BEAVERTON, OR

PROJECT NO:	DATE:		REV:	SHEET NO.:
18-1156	11/18/2018		00	003

GAYLORD®

FOOD SERVICE CANOPY HOOD DETAILS, LEVEL 1

SCALE: NONE

HALLIDAY ASSOCIATES
656 NW NORWOOD
CAMAS, WASH. 98607
360 – 834 – 6557
FAX 360 – 834 – 5453
FOOD FACILITY CONSULTANTS
SPACE PLANNING ♦ DESIGN

KEY PLAN

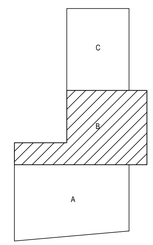

BID/PERMIT SET

Food Service Canopy Hood Details
ACMA
BEAVERTON SCHOOL DISTRICT

FS2.3
74-18109-00
03/14/19
REVISIONS

DLR Group
Architecture Engineering Planning Interiors

©2019, DLR Group Architecture & Engineering Inc., an Oregon corporation. ALL RIGHTS RESERVED

C:\Revit\74-18109-00_ACMA_AR_2018_Central_jgooding@dlrgroup.com.rvt
2/23/2018 12:12:44 PM

GAYLORD AUTOSTART DCA NOTES

A) INSTALLED IN HOOD

B) PRESET TO 90°F AT FACTORY

C) IN SOME CLIMATES AND/OR CONDITIONS, IT MAY BE NECESSARY TO ADJUST THE TEMPERATURE SETTING IN THE FIELD BY OTHERS

WIRING NOTES

E-1) ALL EXTERNAL CONTROL WIRING SHALL BE 12 GAUGE MINIMUM OR AS PER APPLICABLE CODES.

E-2) THE HOLDING COILS WITHIN THE MAGNETIC STARTERS MUST MATCH THE SUPPLY VOLTAGE. MAGNETIC STARTERS ARE SUPPLIED BY OTHERS.

------ FIELD WIRING BY OTHERS
—— WIRING BY GAYLORD

WHEN USING MULTIPLE LIGHT SWITCHES ON ONE CIRCUIT, VERIFY THAT THE LOAD DOES NOT EXCEED 15 AMPS (MAX.) IF IT DOES, USE MULTIPLE CIRCUITS.

SUPPLY VOLTAGE
[X] 120V
[ ] 220V
[ ] 50Hz
[X] 60Hz

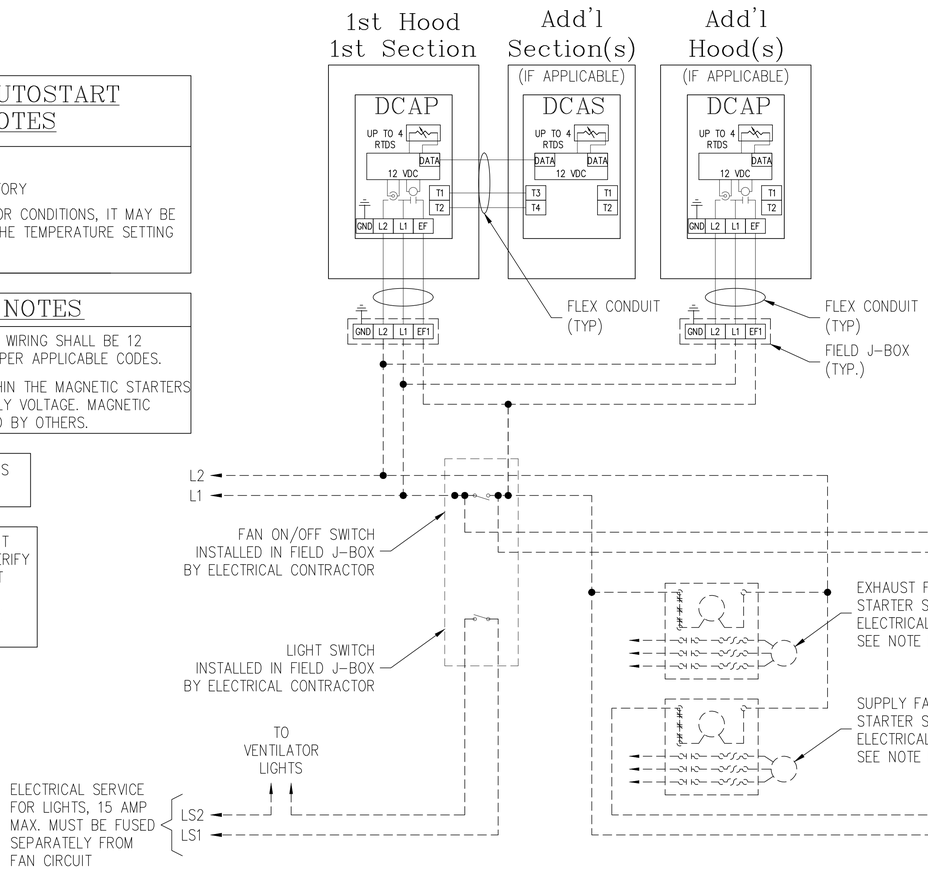

TYPICAL FIRE SYSTEM WIRING DIAGRAM (ANSUL SHOWN)

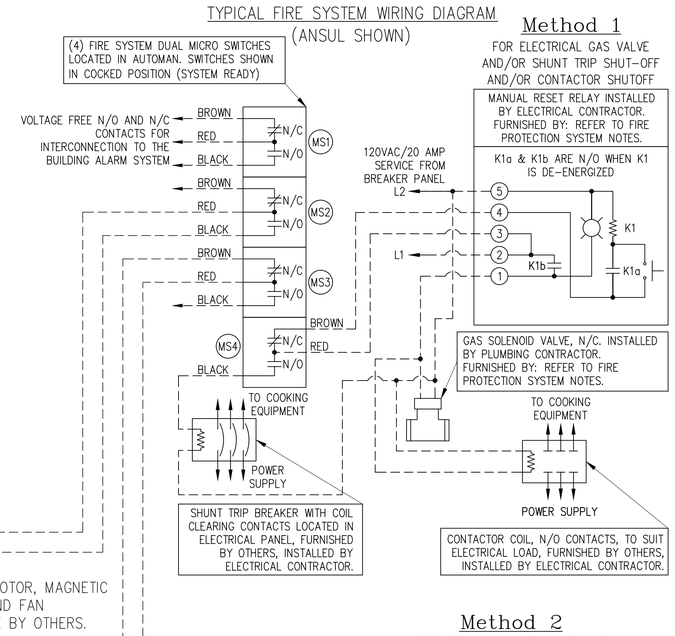

Method 1

FOR ELECTRICAL GAS VALVE AND/OR SHUNT TRIP SHUT-OFF AND/OR CONTACTOR SHUTOFF

Method 2

FOR MECHANICAL GAS VALVE AND ELECTRICAL SHUNT TRIP SHUT-OFF

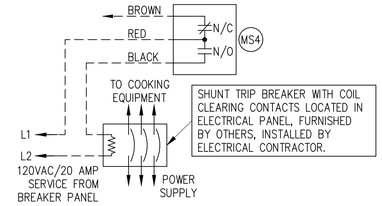

DIMENSION TOLERANCE ± 1/4" (6mm)

ANSUL R-102-ASEF-1T-4N	FP-23	18115602
ELX-GBD-DCA-65	23	18115601
MODEL #	ITEM #	WORK ORDER #

DRAWN BY: JLA | CHECKED BY: | QUOTE VERSION #: 18-1156_00

ARTS AND COMMUNICATION
BEAVERTON, OR

PROJECT NO.: 18-1156 | DATE: 11/18/2018 | REV.: 00 | SHEET NO.: 004

REV	DRWN.BY	DATE	REVISIONS	CHECKED BY
00	JLA	11/18/2018	INITIAL DRAWING	

This plan is made from available information, but measurements are to be verified by contractors, installers and others in connection with this job. Gaylord Industries accepts no responsibility for work done by contractors, installers and others, and will not stand any expense for changes made necessary by local building codes, ordinances, structural conditions or by the substitution or changes in equipment shown in this plan. This plan must be verified and approved by proper parties before fabrication can be started and approval shall not be made unless contractors, installers and others have reviewed applicable codes with code authorities. Reference is made to the general notes, which are a part of these plans and all contractors, installers and others utilizing these plans are advised they are responsible for examining and becoming familiar with said general notes before commencing any work hereunder. Any inconsistencies between these plans and the general notes, or between these plans, the general notes, and local building codes or ordinances must be immediately called to the attention of Gaylord Industries in writing so that any such inconsistencies can be resolved.

Gaylord Industries must be notified of any changes made to the plan in a clear and conspicuous manner. Gaylord Industries will not be responsible for any incidental or consequential damages incurred by others as a result of contractors, installers and others failure to notify Gaylord of changes to the plan.

ATTENTION – This plan is the property of Gaylord Industries and is confidential and proprietary. It is not to be copied, reproduced, or distributed, in whole or part, nor be used in anyway detrimental to Gaylord Industries. If you have received this plan without Gaylord's permission, please (i) do not read it, (ii) reply to the sender that you received the drawing in error, and (iii) erase and/or destroy the drawing.

GAYLORD® INDUSTRIES
10900 S.W. AVERY ST.
TUALATIN, OR 97062
TELEPHONE: (503) 691-2010
TOLL FREE: (800) 547-9696
FAX NO.: (503) 692-6048
E-MAIL: info@gaylordventilation.com

GAYLORD®



HALLIDAY ASSOCIATES
656 NW NORWOOD
CAMAS, WASH. 98607
360 - 834 - 6557
FAX 360 - 834 - 5453
FOOD FACILITY CONSULTANTS
SPACE PLANNING ♦ DESIGN

KEY PLAN

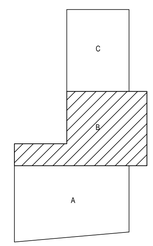

NORTH

FOOD SERVICE CANOPY HOOD DETAILS, LEVEL 1

SCALE: NONE

BID/PERMIT SET

Food Service Canopy Hood Details
ACMA
BEAVERTON SCHOOL DISTRICT

FS2.4
74-18109-00
03/14/19
REVISIONS

DLR Group
Architecture Engineering Planning Interiors

©2019, DLR Group Architecture & Engineering Inc., an Oregon corporation. ALL RIGHTS RESERVED

C:\Revit\74-18109-00_ACMA_AR_2018_Central_jgooding@dlrgroup.com.rvt
2/23/2018 12:12:44 PM

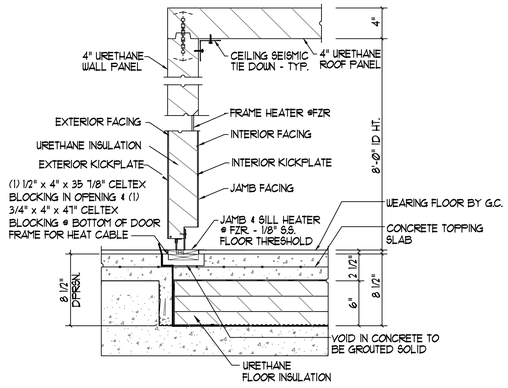

A DOOR/FLOOR SECTION
NO SCALE

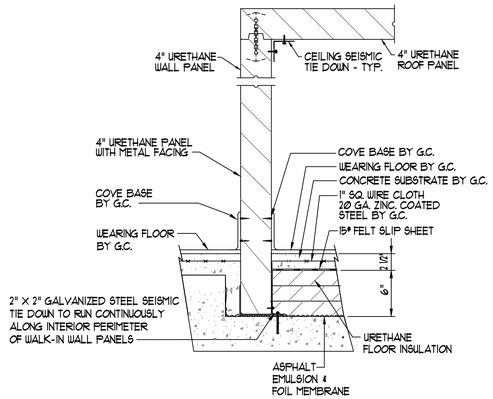

B WALL/FLOOR SECTION
NO SCALE

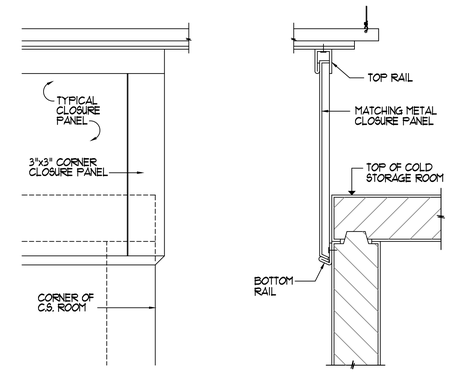

FRONT ELEVATION SECTION

C CLOSURE PANEL DETAILS
NO SCALE

WALK-IN NOTES

1. REFER TO ARCHITECTURAL FINISH SCHEDULE FOR FINISHED FLOOR MATERIAL AT INTERIOR AND EXTERIOR OF WALK-IN COLD STORAGE ROOMS.
2. WALL, CEILING, AND DOOR INSULATION SHALL BE AT LEAST R-25 FOR COOLERS AND R-32 FOR FREEZERS. FREEZER FLOOR INSULATION SHALL BE AT LEAST R-28. NOTE: SPECIFIED 4" INSULATED WALL PANELS ARE TO HAVE AN R-VALUE OF 8.06 PER INCH WITH A TOTAL MINIMUM 32.26 R VALUE.

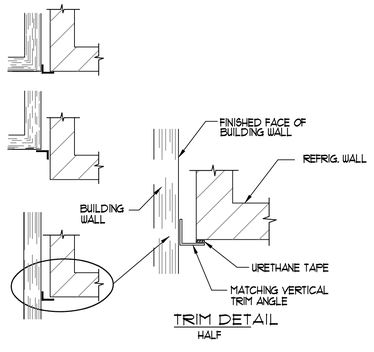

TRIM DETAIL
HALF

D VERITCAL TRIM MOULDING DETAIL
NO SCALE

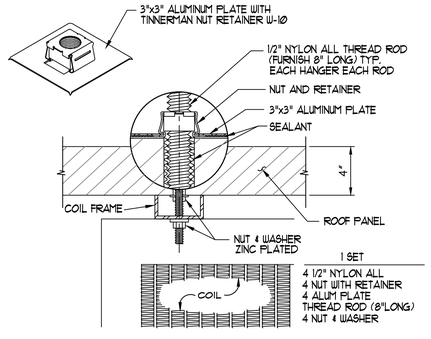

RODS WASHER NUTS & ALUMINUM PLATES WITH NUT RETAINER SHALL BE SIGNED OVER TO JOB SUPERINTENDENT. ACTUAL INSTALLATION OF PARTS SHALL BE RESPONSIBILITY OF THE MECHANICAL REFRIGERATION CONTRACTOR.

E NYLON ROD COIL HANGER DETAIL
NO SCALE

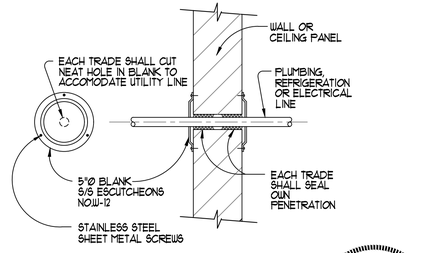

F TYPICAL ESCUTCHEON DETAIL
NO SCALE

FOOD SERVICE WALK-IN DETAILS, LEVEL 1
SCALE: NONE

HALLIDAY ASSOCIATES
656 NW NORWOOD
CAMAS, WASH. 98607
360 — 834 — 6557
FAX 360 — 834 — 5453
FOOD FACILITY CONSULTANTS
SPACE PLANNING • DESIGN

KEY PLAN

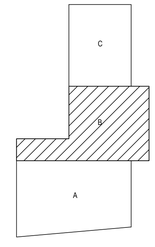

NORTH

BID/PERMIT SET

Food Service Walk-In Details
ACMA
BEAVERTON SCHOOL DISTRICT

FS3.1
74-18109-00
03/14/19
REVISIONS

DLR Group
Architecture Engineering Planning Interiors

© 2019, DLR Group Architecture & Engineering Inc., an Oregon corporation, ALL RIGHTS RESERVED

C:\Revit\74-18109-00_ACMA_AR_2018_Central_jgooding@dlrgroup.com.rvt
2/23/2018 12:12:44 PM

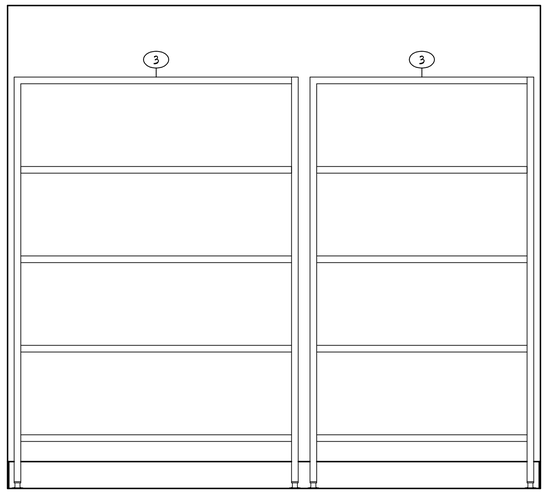

1 ELEVATION DRY STORAGE SHELVING
3/4"=1'-Ø"

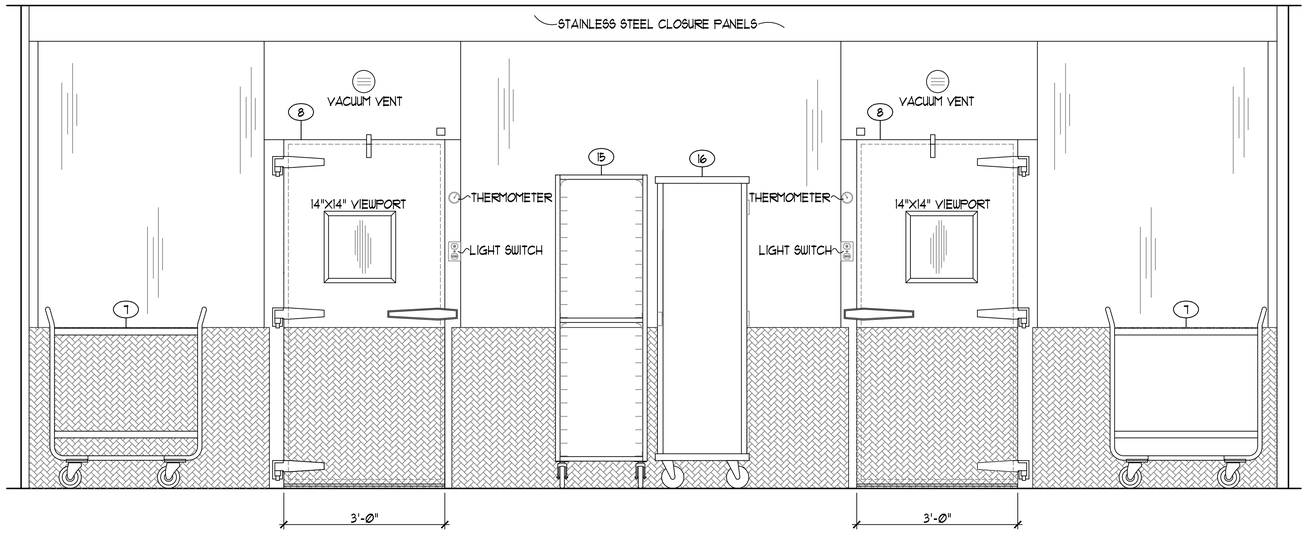

2 ELEVATION WALK-IN COOLER/FREEZER BANK - (EXTERIOR)
3/4"=1'-Ø"

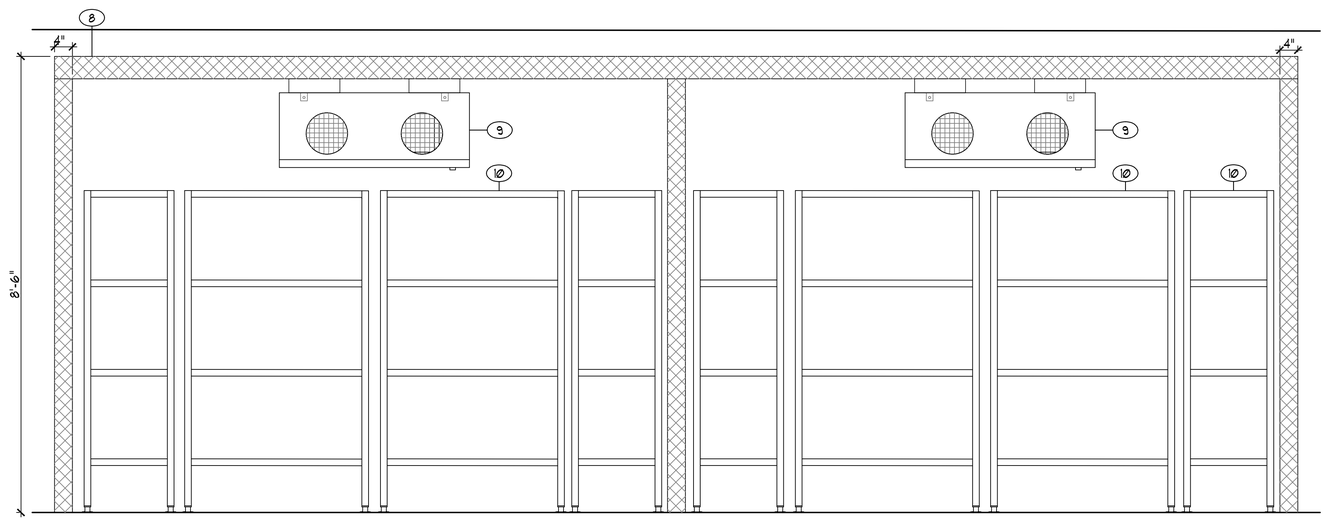

3 ELEVATION WALK-IN COOLER/FREEZER BANK - (INTERIOR)
3/4"=1'-Ø"

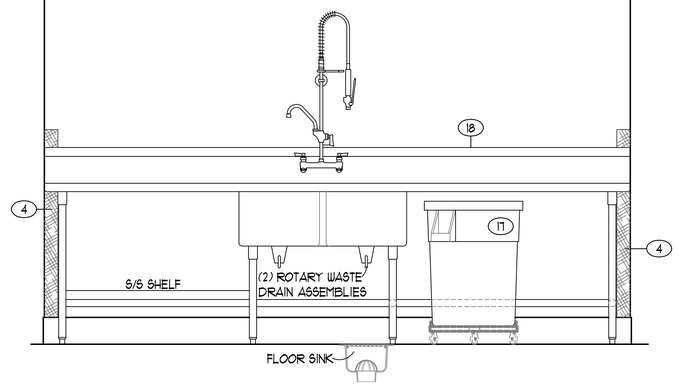

4 ELEVATION VEGETABLE PREP SINK TABLE
3/4"=1'-Ø"

FOOD SERVICE ELEVATION AND FABRICATION DETAILS, LEVEL 1
SCALE: AS NOTED

KEY PLAN

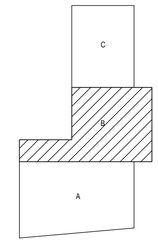

HALLIDAY ASSOCIATES
656 NW NORWOOD
CAMAS, WASH. 98607
360 834 - 6657
FAX 360 - 834 - 5453
FOOD FACILITY CONSULTANTS
SPACE PLANNING ● DESIGN

BID/PERMIT SET

Food Service Elevation and Fabrication Details
ACMA
BEAVERTON SCHOOL DISTRICT

FS3.2
74-18109-00
03/14/19
REVISIONS

DLR Group
Architecture Engineering Planning Interiors

© 2019, DLR Group Architecture & Engineering Inc., an Oregon corporation, ALL RIGHTS RESERVED

C:\Revit\74-18109-00_ACMA_AR_2018_Central_jgooding@dlrgroup.com.rvt
2/23/2018 12:12:44 PM

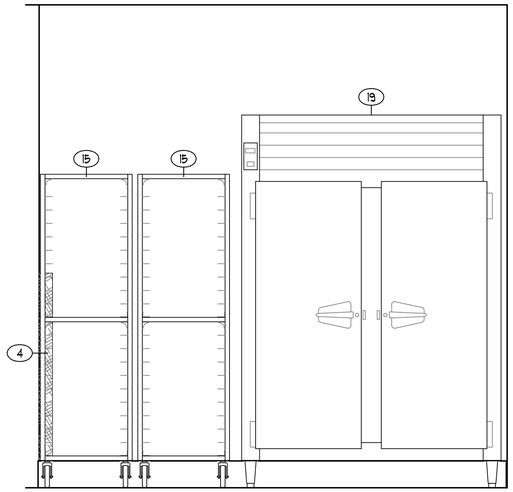

5 ELEVATION RACKS & R. I. REFRIGERATOR
3/4"=1'-0"

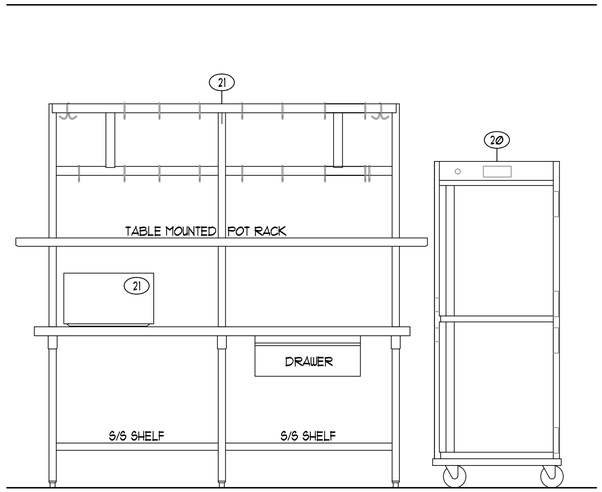

6 ELEVATION ISLAND COOK'S TABLE WITH POT RACK
3/4"=1'-0"

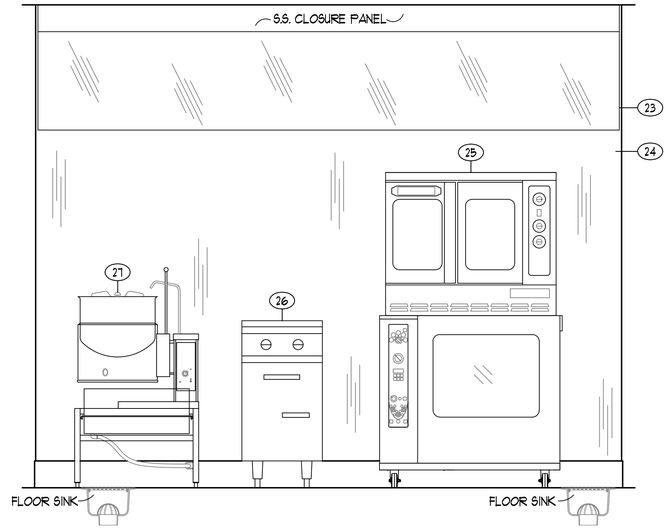

7 ELEVATION COOKING LINE
3/4"=1'-0"

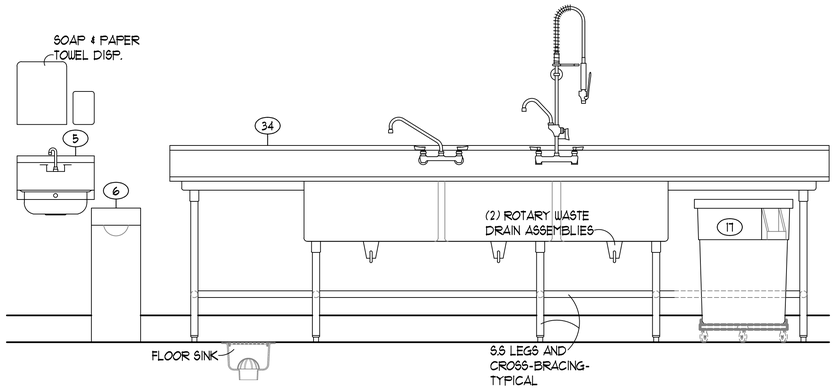

8 ELEVATION POTWASHING SINK TABLE & HAND SINK
3/4"=1'-0"

NOTE: SEE SHEET FS1.1 FOR LOCATIONS AND QUANTITIES OF THESE ITEMS

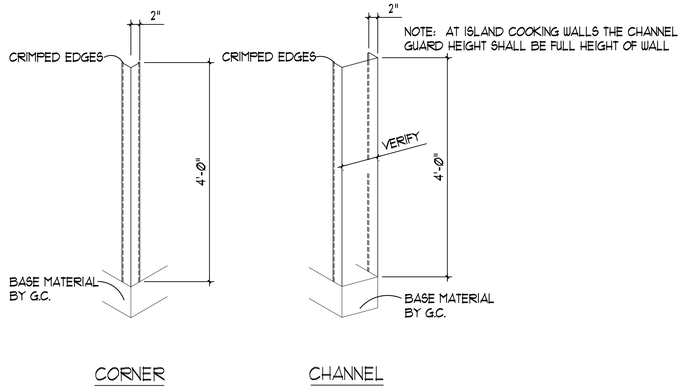

A ISOMETRIC CHANNEL/WALL GUARDS
3/4"=1'-0"

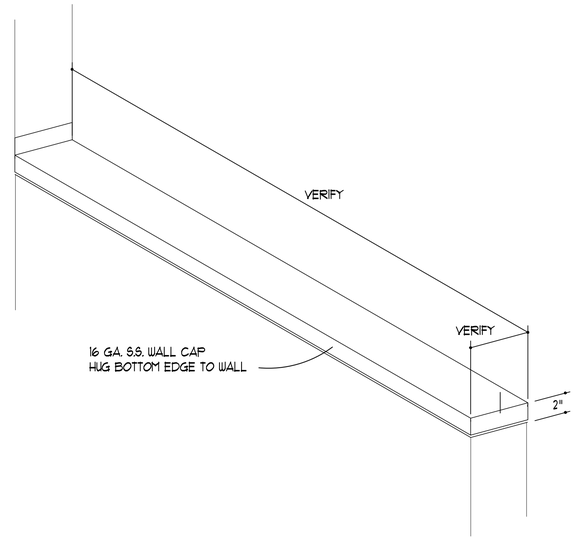

B ISOMETRIC / WALL CAP
3/4"=1'-0"

HALLIDAY ASSOCIATES
656 N.W. NORWOOD
CAMAS, WASH. 98607
360 834 - 6657
FAX 360 - 834 - 5453
FOOD FACILITY CONSULTANTS
SPACE PLANNING & DESIGN

KEY PLAN

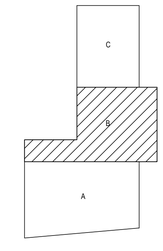

NORTH

FOOD SERVICE ELEVATION AND FABRICATION DETAILS, LEVEL 1
SCALE: AS NOTED

BID/PERMIT SET

Food Service Elevation and Fabrication Details
ACMA
BEAVERTON SCHOOL DISTRICT

FS3.3
74-18109-00
03/14/19
REVISIONS
.

DLR Group
Architecture Engineering Planning Interiors

© 2019, DLR Group Architecture & Engineering Inc., an Oregon corporation, ALL RIGHTS RESERVED

C:\Revit\74-18109-00_ACMA_AR_2018_Central_jgooding@dlrgroup.com.rvt
2/23/2018 12:12:44 PM

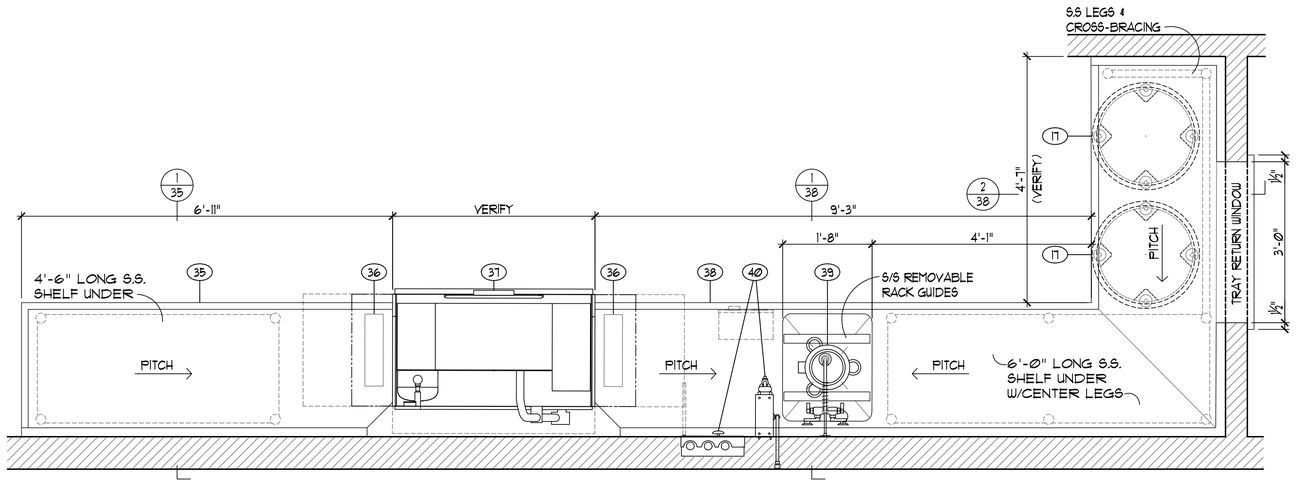

A PLAN VIEW WAREWASHING AREA
3/4"=1'-0"

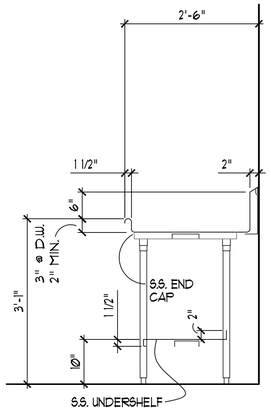

1/35 SECTION
1/2"=1'-0"

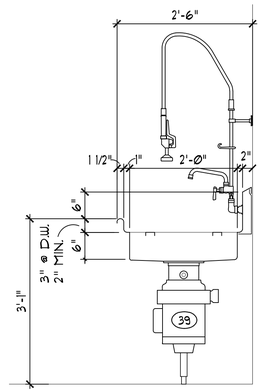

2/35 SECTION
3/4"=1'-0"

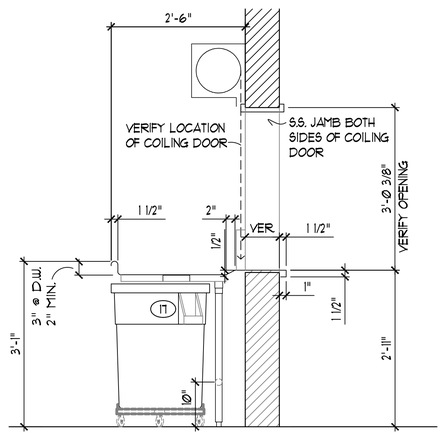

2/30 SECTION
3/4"=1'-0"

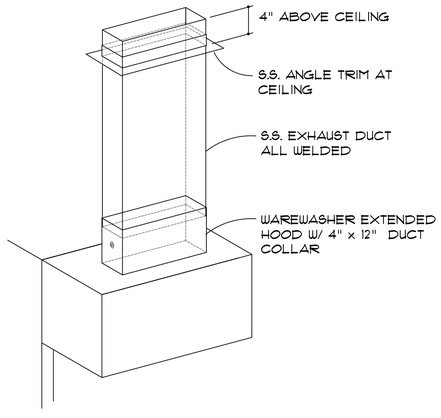

B ISOMETRIC VAPOR EXHAUST DUCTS

FOOD SERVICE ELEVATION AND FABRICATION DETAILS, LEVEL 1

SCALE: AS NOTED

HALLIDAY ASSOCIATES
656 N.W. NORWOOD
CAMAS, WASH. 98607
360 834 — 6657
FAX 360 — 834 — 5453
FOOD FACILITY CONSULTANTS
SPACE PLANNING ♦ DESIGN

KEY PLAN

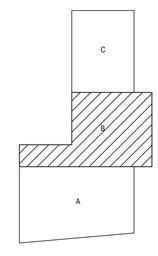

BID/PERMIT SET

Food Service Elevation and Fabrication Details
ACMA
BEAVERTON SCHOOL DISTRICT

FS3.4
74-18109-00
03/14/19
REVISIONS
.

DLR Group
Architecture Engineering Planning Interiors

© 2019, DLR Group Architecture & Engineering Inc., an Oregon corporation, ALL RIGHTS RESERVED

C:\Revit\74-18109-00_ACMA_AR_2018_Central_jgooding@dlrgroup.com.rvt
2/23/2018 12:12:44 PM

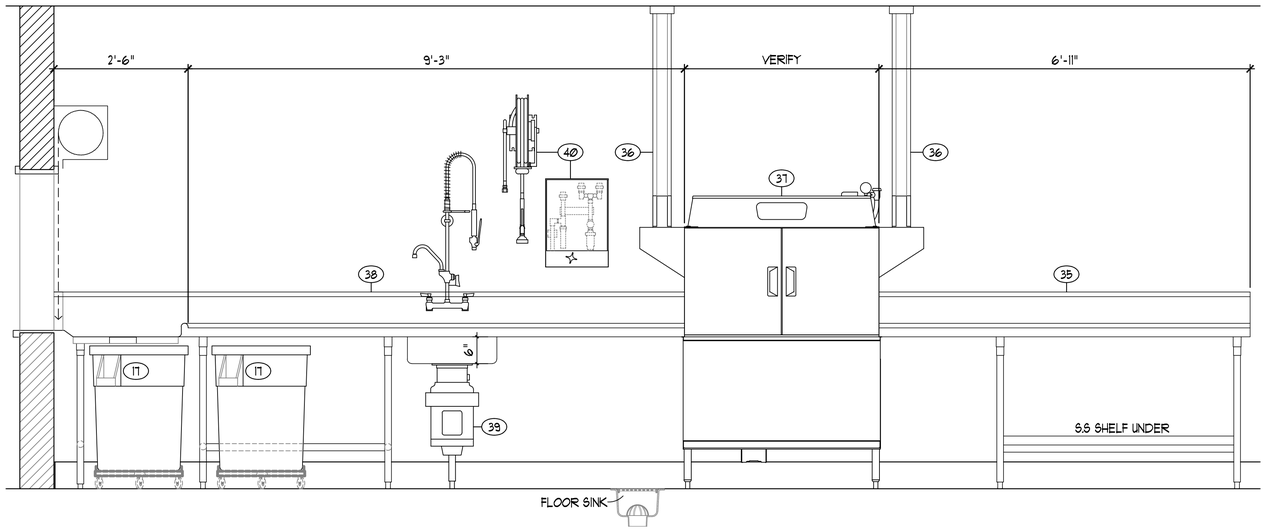

9 ELEVATION SOILED & CLEAN DISHTABLES & WAREWASHER
3/4"=1'-0"

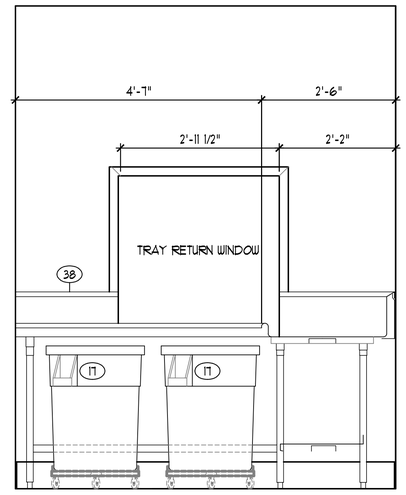

10 ELEVATION SOILED DISHTABLE
3/4"=1'-0"

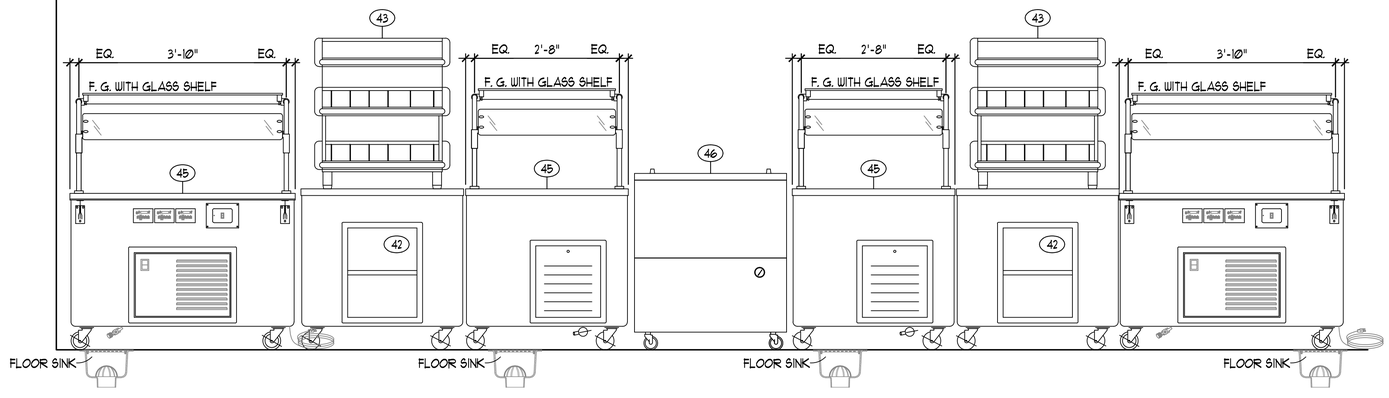

11 ELEVATION SERVING LINE MODULAR UNITS AND MOBILE MILK COOLER
3/4"=1'-0"

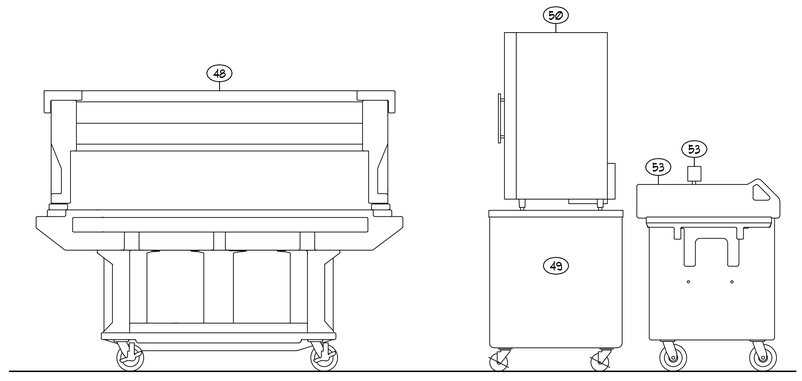

12 ELEVATION SALAD BAR, REFRIG. & CASHIER
3/4"=1'-0"

FOOD SERVICE ELEVATION AND FABRICATION DETAILS, LEVEL 1
SCALE: AS NOTED

KEY PLAN

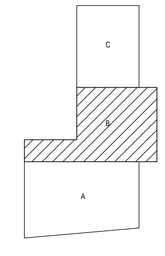

NORTH

HALLIDAY ASSOCIATES
656 N.W. NORWOOD
CAMAS, WASH. 98607
360 834 — 6657
FAX 360 — 834 — 5453
FOOD FACILITY CONSULTANTS
SPACE PLANNING & DESIGN

BID/PERMIT SET

Food Service Elevation and Fabrication Details
ACMA
BEAVERTON SCHOOL DISTRICT

FS3.5
74-18109-00
03/14/19
REVISIONS

DLR Group
Architecture Engineering Planning Interiors

© 2019, DLR Group Architecture & Engineering Inc., an Oregon corporation, ALL RIGHTS RESERVED

C:\Revit\74-18109-00_ACMA_AR_2018_Central_jgooding@dlrgroup.com.rvt
2/23/2018 12:12:44 PM