ARTS & COMMUNICATION MAGNET ACADEMY

BEAVERTON SCHOOL DISTRICT

OWNER REVIEW

ACMA

11375 SW CENTER ST
BEAVERTON, OR 97005

MARCH 14, 2019

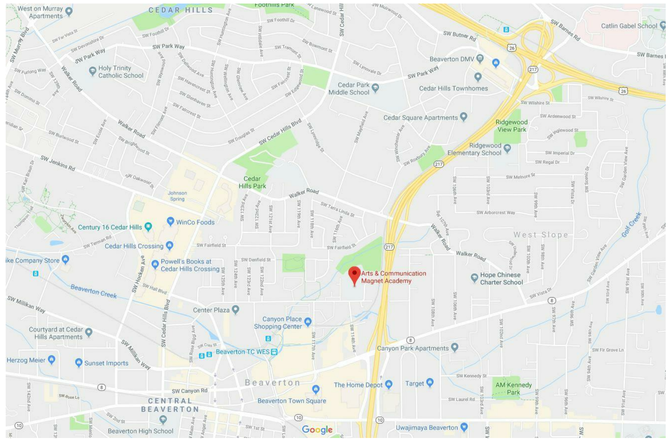

VICINITY MAP

PROJECT TEAM

OWNER: BEAVERTON SCHOOL DISTRICT
Facilities Development
16550 SW Merlo Road
Beaverton, OR 97003
Leslie Imes

ARCHITECTURE
DLR Group
421 SW 6th Ave, Suite 1212
Portland, OR 97204
Jane Gooding, Lisa Johnson, Frank Mueller, Tim Ganey

CIVIL
HHPR, Inc.
205 SE Spokane St, Suite 200
Portland, OR 97202
Janelle Brannon & Kelly Ota

LANDSCAPE
Cameron McCarthy
160 E Broadway
Eugene, OR 97401
Justin Lanphear, Nick Mercado & Matt Koehler

STRUCTURAL
KPFF
111 SW Fifth Ave, Suite 2500
Portland, OR 97204
Jerry Abdie & Bassam Bazzi

MECHANICAL / PLUMBING
DLR Group
421 SW 6th Ave, Suite 1212
Portland, OR 97204
Steve Reigh, Sam Margolis & Chris Narramore

ELECTRICAL / AV
DLR Group
421 SW 6th Ave, Suite 1212
Portland, OR 97204
Oana Stephens, Scott Hager & Daniel Trisler

ENERGY / SUSTAINABILITY
DLR Group
51 University St, Suite 600
Seattle, WA 98101
Amarpreet Sethi & Sandeep Doddaballapur

INTERIORS
DLR Group
700 S Flower St, 22nd Fl
Los Angeles, CA 90017
Yvonne Cheng Lueng

ACOUSTICS
BRC Acoustics
1932 First Ave, Suite 620
Seattle, WA 98101
Anita Joh

FOOD SERVICE
Halliday Associates, Inc.
656 NW Norwood St
Camas, WA 98607
Laura Bourland

ENVELOPE
BEE Consulting
305 SE 3rd Ave, Suite 305
Portland, OR 97214
Tyler Smith

LAND USE
Angelo Planning Group
921 SW Washington St, Suite 468
Portland, OR 97205
Frank Angelo & Jamin Kimmell

SURVEY
Emerio Design
6445 SW Fallbrook Pl, Suite 100
Beaverton, OR 97008
King Phelps

TRAFFIC
DKS Associates
720 SW Washington St, Suite 500
Portland, OR 97205
Ray Delahanty & Garth Appanaitis

GEOTECH
GRI
9750 SW Nimbus Ave
Beaverton, OR 97008
Wes Sprang

COMMISSIONING
Elevate Building Commissioning
5400 NE 23rd Ave
Portland, OR 97211
Nathan Aring

CODE
Code Unlimited
12655 SW Center St, Suite 350
Portland, OR 97005
Mark Murry & Paul Hustedt



DEFERRED SUBMITTALS

- ACOUSTICAL CEILING SUSPENSION SYSTEM
- ATTACHMENT OF ROOFTOP MECHANICAL UNITS TO SUPPORTING CURBS
- BUCKLING-RESTRAINED BRACED FRAMES (BRBs)
- COLD FORMED METAL FRAMING
- EMERGENCY RESPONDER RADIO SYSTEM TESTING
- EMERGENCY GENERATOR
- EXTERIOR RETAINING WALLS OVER 4'-0" IN HEIGHT
- EXTERIOR FENCING OVER 6'-0" IN HEIGHT
- FALL PROTECTION SYSTEM
- FIRE ALARM SYSTEM
- FIRE PROTECTION
- FIRE SPRINKLER
- FIRE STOPPING
- HANGERS AND SUPPORT FOR ALL EQUIPMENT
- HEADER ENGINEERING
- KITCHEN HOOD - TYPE 1 FIRE SUPPRESSION SYSTEM
- METAL STAIRS
- PHOTOVOLTAIC ROOFTOP SYSTEM
- PRODUCT DATA AND INSTALLATION INSTRUCTIONS FOR ALL HVAC SYSTEMS, COMPONENTS AND EQUIPMENT
- SEISMIC BRACING FOR PERMANENTLY INSTALLED ELECTRICAL EQUIPMENT
- SEISMIC BRACING FOR PERMANENTLY INSTALLED PLUMBING EQUIPMENT
- SEISMIC BRACING FOR TELECOMMUNICATIONS RACKS
- SKYLIGHTS
- SPECIAL INSPECTION REQUIRED FOR FIRE-RESISTANT PENETRATIONS AND JOINT SYSTEMS
- STEEL ROOF JOISTS
- WALK-IN COLD STORAGE ROOMS

BID/PERMIT SET

CONDITIONAL USE NUMBER: CU2018-0016
DESIGN REVIEW NUMBER: DR2018-0114
SITE DEVELOPMENT PERMIT NUMBER: TBD
BUILDING PERMIT NUMBER: TBD

REGISTERED ARCHITECT
LISA K. JOHNSON
SEATTLE, WA
6275
STATE OF OREGON

BEAVERTON SCHOOL DISTRICT
ACMA
COVER SHEET

0.0
74-18109-00
03/14/19
REVISIONS

DLR Group
Architecture Engineering Planning Interiors

© 2019, DLR Group Architecture & Engineering Inc., an Oregon corporation, ALL RIGHTS RESERVED

C:\Revit\74-18109-00_ACMA_AR_2018_Central_fmueller.rvt
3/13/2019 6:44:02 PM

.GENERAL.

0.1	SHEET INDEX & OFCI LIST
0.2	SYMBOLS AND ABBREVIATIONS
0.3	SURVEY

.CIVIL.

C1.0	CIVIL COVER SHEET
C1.1	NOTES AND LEGEND
C2.0	OVERALL EXISTING CONDITIONS AND DEMO PLAN
C2.1	EXISTING CONDITIONS AND DEMO PLAN
C2.2	EXISTING CONDITIONS AND DEMO PLAN
C2.3	EXISTING CONDITIONS AND DEMO PLAN
C2.4	EXISTING CONDITIONS AND DEMO PLAN
C2.5	EXISTING CONDITIONS AND DEMO PLAN
C3.0	OVERALL MASS GRADING PLAN
C3.1	MASS GRADING PLAN
C3.2	MASS GRADING PLAN
C3.3	MASS GRADING PLAN
C3.4	MASS GRADING PLAN
C3.5	MASS GRADING PLAN
C3.6	SITE GRADING SECTIONS
C4.0	PAVING PLAN
C5.0	OVERALL UTILITY PLAN
C5.1	UTILITY PLAN
C5.2	UTILITY PLAN
C5.3	UTILITY PLAN
C5.4	UTILITY PLAN
C5.5	UTILITY PLAN
C5.6	UTILITY DETAILS
C5.7	UTILITY DETAILS
C5.8	UTILITY DETAILS
C5.9	UTILITY DETAILS
C5.10	UTILITY DETAILS
C5.11	UTILITY DETAILS
C5.12	UTILITY DETAILS
EC1.0	ESC COVER SHEET
EC1.1	ESC NOTES
EC2.0	CLEARING AND DEMOLITION ESCP
EC3.0	CONSTRUCTION STAGING PLAN
EC4.0	GRADING, STREET, AND UTILITY ESCP
EC5.0	ESC DETAILS

.LANDSCAPE.

L0.0	EXISTING VEGETATION PROTECTION AND REMOVAL PLAN
L1.0	SITE PLAN - OVERALL
L1.1	SITE PLAN - NORTH ENLARGEMENT
L1.2	SITE PLAN - CENTRAL ENLARGEMENT
L1.3	SITE PLAN - SOUTH ENLARGEMENT
L2.0	LAYOUT PLAN - OVERALL
L2.1	LAYOUT PLAN - NORTH ENLARGEMENT
L2.2	LAYOUT PLAN - CENTRAL ENLARGEMENT
L2.3	LAYOUT PLAN - SOUTH ENLARGEMENT
L2.4	PAVING LAYOUT PLAN - ENLARGEMENTS
L2.5	PAVING LAYOUT PLAN - ENLARGEMENTS
L2.6	LAYOUT PLAN - SCHEDULES
L3.0	GRADING PLAN - OVERALL
L3.1	GRADING PLAN - NORTH ENLARGEMENT
L3.2	GRADING PLAN - CENTRAL ENLARGEMENT
L3.3	GRADING PLAN - SOUTH ENLARGEMENT
L4.0	IRRIGATION MAINLINE PLAN
L4.1	IRRIGATION PLAN - NORTH ENLARGEMENT
L4.2	IRRIGATION PLAN - CENTRAL ENLARGEMENT
L4.3	IRRIGATION PLAN - SOUTH ENLARGEMENT
L5.0	OVERALL LANDSCAPE PLAN
L5.1	PLANTING PLAN - NORTH ENLARGEMENT
L5.2	PLANTING PLAN - CENTRAL ENLARGEMENT
L5.3	PLANTING PLAN - SOUTH ENLARGEMENT
L5.4	VEGETATIVE CORRIDOR ENHANCEMENT - NOTES AND PLANT SCHEDULE
L5.5	VEGETATIVE CORRIDOR ENHANCEMENT - DETAILS
L5.6	VEGETATIVE CORRIDOR ENHANCEMENT - SITE PREPARATION PLAN
L5.7	VEGETATIVE CORRIDOR ENHANCEMENT - PLANTING PLAN
L6.0	SITE DETAILS
L6.1	SITE DETAILS
L6.2	SITE DETAILS
L6.3	SITE DETAILS
L6.4	SITE DETAILS
L6.5	SITE DETAILS
L6.6	SITE DETAILS
L6.7	SITE DETAILS
L6.8	SITE DETAILS
L7.0	STRIPING AND SIGNAGE DIAGRAM
L8.0	DEDUCTIVE ALTERNATIVE PLANS

.ARCHITECTURAL.

CP0.0	CODE SUMMARY
CP1.1	CODE PLAN - FIRE RATINGS - LEVEL 1
CP1.2	CODE PLAN - FIRE RATINGS - LEVEL 2
CP2.1	CODE PLAN - EXITING - LEVEL 1
CP2.2	CODE PLAN - EXITING - LEVEL 2
AD0.0	DEMOLITION PLAN, OVERALL SITE
AD1.1	DEMOLITION PLAN, PERFORMING ARTS
OP0.0	OVERALL SITE PLAN DIAGRAM
OP1.1	OVERALL FLOOR PLAN, LEVEL 1
OP1.2	OVERALL FLOOR PLAN, LEVEL 2
A0.0	ROOM FINISH SCHEDULE AND NOTES
A0.1	COLOR & MATERIAL SCHEDULE
A0.3	ASSEMBLY & PARTITION TYPES
A0.4	ASSEMBLY DETAILS
A0.5	ASSEMBLY DETAILS
A1.1A	FLOOR PLAN, LEVEL 1 - AREA A
A1.1B	FLOOR PLAN, LEVEL 1 - AREA B
A1.1C	FLOOR PLAN, LEVEL 1 - AREA C
A1.2A	FLOOR PLAN, LEVEL 2 - AREA A
A1.2B	FLOOR PLAN, LEVEL 2 - AREA B
A1.2C	FLOOR PLAN, LEVEL 2 - AREA C
A1.3	RAMP DEDUCTIVE ALTERNATE
A1.4	SITE DETAILS
A2.1	RESTROOMS - LARGE SCALE PLANS
A2.2	RESTROOMS - INTERIOR ELEVATIONS
A3.1A	RCP, LEVEL 1 - AREA A
A3.1B	RCP, LEVEL 1 - AREA B
A3.1C	RCP, LEVEL 1 - AREA C
A3.2A	RCP, LEVEL 2 - AREA A
A3.2B	RCP, LEVEL 2 - AREA B
A3.2C	RCP, LEVEL 2 - AREA C
A3.3	CEILING DETAILS
A3.4	CEILING DETAILS
A4.1	OVERALL ROOF PLAN
A4.1A	ROOF PLAN - AREA A
A4.1B	ROOF PLAN - AREA B
A4.1C	ROOF PLAN - AREA C
A4.2	ROOF DETAILS
A4.3	ROOF DETAILS
A5.1	EXTERIOR ELEVATIONS (OVERALL)
A5.2	EXTERIOR ELEVATIONS
A5.3	EXTERIOR ELEVATIONS
A5.4	EXTERIOR ELEVATIONS
A5.5	EXTERIOR ELEVATIONS
A6.1	BUILDING SECTIONS
A6.2	BUILDING SECTIONS
A7.1	WALL SECTIONS
A7.2	WALL SECTIONS
A7.3	WALL SECTIONS
A7.4	WALL SECTIONS
A7.5	WALL SECTIONS
A7.6	WALL SECTIONS
A8.1	STAIR DRAWINGS, SOUTH STAIR
A8.2	STAIR DRAWINGS, CENTRAL STAIR
A8.3	STAIR DRAWINGS, NORTH STAIR
A8.4	RAMP PLANS & SECTIONS
A8.5	STAIR DETAILS
A8.6	ELEVATOR PLANS & DETAILS
A8.7	RAILING DETAILS
A8.8	PLATFORM ELEVATIONS AND DETAILS
A9.1	DOOR & FRAME SCHEDULE
A9.2	INTERIOR FRAME ELEVATIONS
A9.3	EXTERIOR FRAME ELEVATIONS
A9.4	EXTERIOR FRAME ELEVATIONS
A9.5	INTERIOR FRAME DETAILS
A9.6	INTERIOR FRAME DETAILS
A9.7	EXTERIOR FRAME DETAILS
A9.8	EXTERIOR FRAME DETAILS
A10.1	EXTERIOR DETAILS
A10.2	EXTERIOR DETAILS
A10.3	EXTERIOR DETAILS
A10.10	INTERIOR DETAILS
A10.11	INTERIOR DETAILS
A10.13	SIGN SCHEDULE
A10.14	INTERIOR SIGN DETAILS
A11.1	ENLARGED PLAN & INT. ELEVATIONS
A11.2	ENLARGED PLAN & INT. ELEVATIONS
A11.3	ENLARGED PLAN & INT. ELEVATIONS
A11.4	ENLARGED PLAN & INT. ELEVATIONS
A11.5	ENLARGED PLAN & INT. ELEVATIONS
A11.6	ENLARGED PLAN & INT. ELEVATIONS
A11.7	ENLARGED PLAN & INT. ELEVATIONS
A11.8	ENLARGED PLAN & INT. ELEVATIONS
A11.9	ENLARGED PLAN & INT. ELEVATIONS
A11.10	INTERIOR ELEVATIONS
A11.11	INTERIOR ELEVATIONS
A11.12	INTERIOR ELEVATIONS
A11.13	CASEWORK
A11.14	CASEWORK
A11.15	CASEWORK
A11.16	CASEWORK
A13.1A	FINISH PLAN, LEVEL 1 - AREA A
A13.1B	FINISH PLAN, LEVEL 1 - AREA B
A13.1C	FINISH PLAN, LEVEL 1 - AREA C
A13.2A	FINISH PLAN, LEVEL 2 - AREA A
A13.2B	FINISH PLAN, LEVEL 2 - AREA B
A13.2C	FINISH PLAN, LEVEL 2 - AREA C
A14.1A	FURNITURE PLAN, LEVEL 1 - AREA A
A14.1B	FURNITURE PLAN, LEVEL 1 - AREA B
A14.1C	FURNITURE PLAN, LEVEL 1 - AREA C
A14.2A	FURNITURE PLAN, LEVEL 2 - AREA A
A14.2B	FURNITURE PLAN, LEVEL 2 - AREA B
A14.2C	FURNITURE PLAN, LEVEL 2 - AREA C

.STRUCTURAL.

S0.1	DRAWING INDEX AND ABBREVIATIONS
S0.2	GENERAL STRUCTURAL NOTES
S0.3	GENERAL STRUCTURAL NOTES CONT.
S0.4	SPECIAL INSPECTION AND TESTING
S0.5	SPECIAL INSPECTION AND TESTING
S0.6	SPECIAL INSPECTION AND TESTING
S0.7	SPECIAL INSPECTION AND TESTING
S0.8	FLOOR LIVE LOADING PLANS
S1.1	FOUNDATION PLAN - OVERALL
S1.1A	FOUNDATION PLAN - AREA A
S1.1B	FOUNDATION PLAN - AREA B
S1.1C	FOUNDATION PLAN - AREA C
S1.2	FRAMING PLAN, LEVEL 2 - OVERALL
S1.2A	FRAMING PLAN, LEVEL 2 - AREA A
S1.2B	FRAMING PLAN, LEVEL 2 - AREA B
S1.2C	FRAMING PLAN, LEVEL 2 - AREA C
S1.3	FRAMING PLAN, ROOF - OVERALL
S1.3A	FRAMING PLAN, ROOF - AREA A
S1.3B	FRAMING PLAN, ROOF - AREA B
S1.3C	FRAMING PLAN, ROOF - AREA C
S2.1	RAMP DEDUCTIVE ALTERNATE
S3.1	BRACED FRAME ELEVATIONS
S3.2	BRACED FRAME ELEVATIONS
S3.3	BRACED FRAME ELEVATIONS
S3.11	BRACED FRAME DETAILS
S3.12	BRACED FRAME DETAILS
S3.13	BRACED FRAME DETAILS
S3.14	BRACED FRAME DETAILS
S5.1	CONCRETE DETAILS
S5.2	CONCRETE DETAILS
S5.3	CONCRETE DETAILS
S5.4	CONCRETE DETAILS
S6.1	STEEL DETAILS
S6.2	STEEL DETAILS
S6.3	STEEL DETAILS
S6.4	STEEL DETAILS
S6.5	STEEL DECK DETAILS
S6.6	STEEL DETAILS
S6.7	STEEL DETAILS
S6.8	STEEL DETAILS
S6.9	STEEL JOIST DETAILS
S6.10	STEEL DETAILS
S6.11	SCREEN WALL DETAILS

.MECHANICAL.

MP0.0	MECHANICAL SYMBOLS AND ABBREVIATIONS
MP0.1	MECHANICAL SYMBOLS AND ABBREVIATIONS
M1.0	MECHANICAL UNDERGROUND PIPING
M1.1A	HVAC PLAN, LEVEL 1 - AREA A
M1.1B	HVAC PLAN, LEVEL 1 - AREA B
M1.1C	HVAC PLAN, LEVEL 1 - AREA C
M1.2A	HVAC PLAN, LEVEL 2 - AREA A
M1.2B	HVAC PLAN, LEVEL 2 - AREA B
M1.2C	HVAC PLAN, LEVEL 2 - AREA C
M1.3	HVAC PLAN, ROOF PLAN - OVERALL
M1.4	HVAC - RAMP DEDUCTIVE ALTERNATE
M2.1A	HVAC PIPING PLAN, LEVEL 1 - AREA A
M2.1B	HVAC PIPING PLAN, LEVEL 1 - AREA B
M2.1C	HVAC PIPING PLAN, LEVEL 1 - AREA C
M2.2A	HVAC PIPING PLAN, LEVEL 2 - AREA A
M2.2B	HVAC PIPING PLAN, LEVEL 2 - AREA B
M2.2C	HVAC PIPING PLAN, LEVEL 2 - AREA C
M3.1	LARGE SCALE MECHANICAL PLANS
M3.2	LARGE SCALE MECHANICAL PLANS
M3.3	NATURAL GAS RISER - FIRST LEVEL SW
M3.4	NATURAL GAS RISER - FIRST LEVEL NE
M3.5	NATURAL GAS RISER-SECOND LEVEL/ROOF
M4.1	MECHANICAL CONTROLS
M4.2	MECHANICAL CONTROLS
M4.3	MECHANICAL CONTROLS
M5.1	MECHANICAL DETAILS
M5.2	MECHANICAL DETAILS
M5.3	MECHANICAL DETAILS
M6.1	MECHANICAL SCHEDULES
M6.2	MECHANICAL SCHEDULES
M6.3	MECHANICAL SCHEDULES
M6.4	MECHANICAL SCHEDULES - VENT. CALC
M6.5	MECHANICAL SCHEDULES - VENT. CALC
M6.6	MECHANICAL SCHEDULES - VENT. CALC
M6.7	MECHANICAL SCHEDULES - VENT. CALC

.PLUMBING.

P1.0A	PLUMBING PLAN, UNDERGROUND - AREA A
P1.0B	PLUMBING PLAN, UNDERGROUND - AREA B
P1.0C	PLUMBING PLAN, UNDERGROUND - AREA C
P1.1A	PLUMBING PLAN, LEVEL 1 - AREA A
P1.1B	PLUMBING PLAN, LEVEL 1 - AREA B
P1.1C	PLUMBING PLAN, LEVEL 1 - AREA C
P1.2A	PLUMBING PLAN, LEVEL 2 - AREA A
P1.2B	PLUMBING PLAN, LEVEL 2 - AREA B
P1.2C	PLUMBING PLAN, LEVEL 2 - AREA C
P1.3	PLUMBING PLAN, ROOF PLAN - OVERALL
P1.4	PLUMBING - RAMP DEDUCTIVE ALTERNATE
P2.1	LARGE SCALE PLUMBING PLANS
P2.2	LARGE SCALE PLUMBING PLANS
P3.1	PL RISER DIAGRAMS, W/V, LEVEL 1 & 2
P3.2	PL RISER DIAGRAMS, W/V, LEVEL 1 & 2
P3.3	PL RISER DIAGRAMS, CW/HW, LEVEL 1
P3.4	PL RISER DIAGRAMS, CW/HW, LEVEL 1
P3.5	PL RISER DIAGRAMS, CW/HW, LEVEL 2
P4.1	PLUMBING DETAILS
P4.2	PLUMBING DETAILS
P5.1	PLUMBING SCHEDULES

.FIRE PROTECTION.

FP1.0	FIRE PROTECTION COVER SHEET AND DETAILS
FP1.1	FIRE PROTECTION PLAN - FIRST LEVEL
FP1.2	FIRE PROTECTION PLAN - SECOND LEVEL

.ELECTRICAL.

E0.0	ELECTRICAL SYMBOLS & ABBREVIATIONS
DE0.1	DEMO ELECTRICAL SITE PLAN
E0.1	ELECTRICAL SITE PLAN
E0.2	LIGHTING CONTROL INTENT PLAN, LVL 1
E0.3	LIGHTING CONTROL INTENT PLAN, LVL 2
E1.1A	LIGHTING PLAN, FIRST LEVEL - AREA A
E1.1B	LIGHTING PLAN, FIRST LEVEL - AREA B
E1.1C	LIGHTING PLAN, FIRST LEVEL - AREA C
E1.2A	LIGHTING PLAN,SECOND LEVEL - AREA A
E1.2B	LIGHTING PLAN, SECOND LEVEL - AREA B
E1.2C	LIGHTING PLAN, SECOND LEVEL - AREA C
E2.1A	POWER PLAN, FIRST LEVEL - AREA A
E2.1B	POWER PLAN, FIRST LEVEL - AREA B
E2.1C	POWER PLAN, FIRST LEVEL - AREA C
E2.2A	POWER PLAN, SECOND LEVEL - AREA A
E2.2B	POWER PLAN, SECOND LEVEL - AREA B
E2.2C	POWER PLAN, SECOND LEVEL - AREA C
E2.3	POWER PLAN, ROOF - OVERALL
E3.1A	FIRE ALARM PLAN, FIRST LEVEL - AREA A
E3.1B	FIRE ALARM PLAN, FIRST LEVEL - AREA B
E3.1C	FIRE ALARM PLAN, FIRST LEVEL - AREA C
E3.2A	FIRE ALARM PLAN,SECOND LEVEL - AREA A
E3.2B	FIRE ALARM PLAN,SECOND LEVEL - AREA B
E3.2C	FIRE ALARM PLAN,SECOND LEVEL - AREA C
E4.1	ENLARGED KITCHEN PLAN
E5.1	ELECTRICAL ONE-LINE DIAGRAM
E5.2	ELECTRICAL ONE-LINE DIAGRAM
E5.3	PAC ONE-LINE DIAGRAM
E6.1	ELECTRICAL DETAILS
E6.2	ELECTRICAL DETAILS
E6.3	ELECTRICAL DETAILS
E6.4	ELECTRICAL DETAILS
E6.5	ELECTRICAL DETAILS
E7.1	ELECTRICAL SCHEDULES
E7.2	ELECTRICAL SCHEDULES
E8.1	PANEL SCHEDULES
E8.2	PANEL SCHEDULES
E8.3	PANEL SCHEDULES
E8.4	PANEL SCHEDULES
E8.5	PANEL SCHEDULES
E8.6	PANEL SCHEDULES
E9.0	SITE LIGHTING PHOTOMETRIC PLAN
E9.1	LIGHTING PHOTOMETRIC PLAN - LEVEL 1
E9.2	LIGHTING PHOTOMETRIC PLAN - LEVEL 2
E9.3	EM LIGHTING PHOTOMETRIC PLAN-LEVEL 1
E9.4	EM LIGHTING PHOTOMETRIC PLAN-LEVEL 2

.TELECOMMUNICATION.

T0.0	TELECOM SYMBOLS & ABBREVIATIONS
T1.1A	TELECOM PLAN, FIRST LEVEL - AREA A
T1.1B	TELECOM PLAN, FIRST LEVEL - AREA B
T1.1C	TELECOM PLAN, FIRST LEVEL - AREA C
T1.2A	TELECOM PLAN, SECOND LEVEL - AREA A
T1.2B	TELECOM PLAN, SECOND LEVEL - AREA B
T1.2C	TELECOM PLAN, SECOND LEVEL - AREA C
T4.1	ENLARGED TELECOM ROOMS
T5.1	TELECOM RISER DIAGRAMS
T5.2	TELECOM RISER DIAGRAMS
T5.3	TELECOM RISER DIAGRAMS
T5.4	TELECOM RISER DIAGRAMS
T7.1	TELECOM RACEWAY AND FACEPLATE
T7.2	TELECOM DETAILS
T7.3	TELECOM DETAILS

.FOOD SERVICE.

FS1.1	FOOD SERVICE EQUIPMENT PLAN
FS1.2	FOOD SERVICE PLUMBING PLAN
FS1.3	FOOD SERVICE MECHANICAL PLAN/ FLOOR DEPRESSION PLAN
FS1.4	FOOD SERVICE ELECTRICAL / REFRIGERATION PLAN
FS2.1	FOOD SERVICE CANOPY HOOD DETAILS
FS2.2	FOOD SERVICE CANOPY HOOD DETAILS
FS2.3	FOOD SERVICE CANOPY HOOD DETAILS
FS2.4	FOOD SERVICE CANOPY HOOD DETAILS
FS3.1	FOOD SERVICE WALK-IN DETAILS
FS3.2	FOOD SERVICE ELEVATION AND FABRICATION DETAILS
FS3.3	FOOD SERVICE ELEVATION AND FABRICATION DETAILS
FS3.4	FOOD SERVICE ELEVATION AND FABRICATION DETAILS
FS3.5	FOOD SERVICE ELEVATION AND FABRICATION DETAILS

ACMA Owner Furnished Material & Equipment Schedule

Description		Spec Division	Comments
Electrical			
	Telephones & Related Gear	DIV 27	OFOI
	Access Control Software Licenses	DIV 28	CFCI Tested by Owner...
	Access Control Card / Badge Printing Station	DIV 28	CFCI Tested by Owner...
	Wireless Access Points (WAP)	DIV 27	OFCI
	Network Switches	DIV 27	OFCI
	Security Cameras	DIV 27	CFCI.
Furnishings			
	Grab Bars	DIV 10	CFCI
	Sanitary Napkin Diposal	DIV 10	CFCI
	Robe Hooks	DIV 10	CFCI
	Mirrors	DIV 10	CFCI
	Custodial Accessories: Utility shelf	DIV 10	CFCI
	Paper Towel Dispensers	DIV 10	OFCI.
	Warm-Air Dryer	DIV 10	CFCI.
	Soap Dispensers	DIV 10	OFCI.
	Toilet Paper (Roll) Dispensers	DIV 10	OFCI.
	Seat Cover Dispensers	DIV 10	OFCI
	Waste Receptable	DIV 10	OFCI.
	Diaper Changing Table	DIV 10	CFCI. Admin restroom only
	Kiln		OFCI. A/E to design all clearances, MEP connections
	Film Drying Cabinet	DIV 10	OFCI Located in Photo classroom
	Pottery Wheels		OFCI. A/E to design all clearances, MEP connections
	Fume Hood	DIV 11	CFCI.
	AED - Automated External Defibrillator		OFOI. To be located in Adminstration Area.
	Interior Movable Furnishings		OFOI.
	Library Shelving - Movable		OFCI.
	Library Shelving - Perimeter Walls	DIV 12	CFCI. Coordinate whips with electrical outlets at shelving...
	Domestic Refrigerators	DIV 11	CFCI. Located in break room and science prep
	Undercounter Fridge & Freezer	DIV 11	CFCI. Located in Health Occ.
	Domestic Microwaves	DIV 11	CFCI. Located in break room and science prep
	Domestic Dishwashers	DIV 11	CFCI. Located in break room and science prep
	Domestic Washer / Dryer	DIV 11	CFCI. Located in Level 2 Dance Office
	Ice Machine	DIV 11	CFCI. Located in Science Prep.
	Printers / Copiers		OFOI.
General Building Components			
	Long Throw Projectors		OFCI. Located in commons.
	Long Throw Projector Mount		OFCI. Located in commons.
	Short Throw Projectors		OFCI.
	Short Throw Projector Mount		OFCI.
	Projection Screens		CFCI. Motorized, retractable. Located in commons, library,...
	Movable Projection Screens		OFOI.
	Flat Screen TVs & Mounts		OFCI.

BID/PERMIT SET

CONDITIONAL USE NUMBER: CU2018-0016
DESIGN REVIEW NUMBER: DR2018-0114
SITE DEVELOPMENT PERMIT NUMBER: TBD
BUILDING PERMIT NUMBER: TBD

REGISTERED ARCHITECT
LISA K. JOHNSON
SEATTLE, WA
6279
STATE OF OREGON

SHEET INDEX & OFCI LIST
ACMA
BEAVERTON SCHOOL DISTRICT

0.1
74-18109-00
03/14/19
REVISIONS

DLR Group
Architecture Engineering Planning Interiors

© 2019, DLR Group Architecture & Engineering Inc., an Oregon corporation, ALL RIGHTS RESERVED

C:\Revit\74-18109-00_ACMA_AR_2018_Central_fmueller.rvt
3/14/2019 9:34:33 AM

ABBREVIATIONS

#	NUMBER
&	AND
@	AT
	ABOVE FINISHED GRADE
AB	ANCHOR BOLT
AB	AIR BARRIER
ABS	ASBESTOS
ACC	ADA ACCESSIBLE
ACR	ACRYLIC
AD	ACCESS DOOR
ADA	AMERICANS WITH DISABILITY ACT
ADDN	ADDITION OR ADDITIONAL
ADJ	ADJUSTABLE
ADJT	ADJACENT
ADMIN	ADMINISTRATION
AEC	AUTOMATED EXTERNAL DEFIBRILLATIORS
AHJ	AUTHORITY HAVING JURISDICTION
AL	ALUMINUM
ALT	ALTERNATE
ALUM	ALUMINUM
ANCH	ANCHOR
ANSI	AMERICAN NATIONAL STANDARDS INSTITUTE
AP	ACCESS PANEL
APC	ACOUSTIC PANEL CEILING
APPROX	APPROXIMATE
ARCH	ARCHITECTURAL
ASPH	ASPHALT
AUTO	AUTOMATIC
AVG	AVERAGE
AWP	ACOUSTIC WALL PANEL
B.O.	BOTTOM OF
BCS	BABY CHANGING STATION
BD	BOARD
BLDG	BUILDING
BLK	BLOCK
BLKG	BLOCKING
BLKHD	BULKHEAD
BM(S)	BEAM(S)
BOT	BOTTOM
BRDG	BRIDGING
BRKT	BRACKET
BSMT	BASEMENT
BTWN	BETWEEN
C	CHANNEL
CAB	CABINET
CAP	CAPACITY
CER	CERAMIC
CF	CUBIC FEET
CFCI	CONTRACTOR FURNISHED CONTRACTOR INSTALLED
CFSF	COLD-FORMED STEEL FRAMING
CG	CLEAR FLOAT GLASS
CI	CAST IRON
CIG	CLEAR INSULATING GLASS
CIP	CAST IN PLACE
CJ	CONTROL JOINT
CL	CENTER LINE
CLG	CEILING
CLOS	CLOSET
CLR	CLEAR
CMU	CONCRETE MASONRY UNIT
COL	COLUMN
COM	COMMON
COMB	COMBINATION
COMM	COMMUNICATIONS
COMPR	COMPRESSIBLE
CONC	CONCRETE
CONF	CONFERENCE
CONFIG	CONFIGURATION
CONN(S)	CONNECTION(S)
CONST	CONSTRUCTION
CONT	CONTINUOUS
CONTR	CONTRACT(OR)
CORR	CORRIDOR
CP	COVER PLATE
CPT	CARPET
CR	CHAIR RAIL
CS	COUNTERSINK
CSTJ	CONSTRUCTION JOINT
CSWK	CASEWORK
CT	CERAMIC TILE
CTG	CLEAR TEMPERED FLOAT GLASS
CTIG	CLEAR TEMPERED INSULATING GLASS
CTR	CENTER
CU	CUBIC
CY	CUBIC YARD
D	DEPTH
DB	DECIBEL
DBL	DOUBLE
DC	DUST COLLECTOR
DEG	DEGREE
DEMO	DEMOLISH OR DEMOLITION
DEPR	DEPRESS(ION)(ED)
DEPT	DEPARTMENT
DET	DETAIL
DF	DRINKING FOUNTAIN
DG	DOOR GRILLE
DIA	DIAMETER
DIAG	DIAGONAL
DIM	DIMENSION
DIV	SPECIFICATION DIVISION
DN	DOWN
DPFG	DAMPROFFING
DR	DOOR
DW	DISHWASHER
DWG(S)	DRAWING(S)
DWR	DRAWER
E	EAST
EA	EACH
EB	EXPANSION BOLT
EC	ELECTRICAL CONTRACTOR
EEW	EMERGENCY EYE WASH
EEWS	EMERGENCY EYE WASH SHOWER
EFF	EFFICIENCY
EJ	EXPANSION JOINT
EL	ELEVATION
ELAS	ELASTOMERIC
ELEC	ELECTRICAL
ELEV	ELEVATOR
EMER	EMERGENCY
ENCL	ENCLOSURE
ENG	ENGINEER
ENTR	ENTRANCE
EQ	EQUAL
EQUIP	EQUIPMENT
EQUIV	EQUIVALENT
ERF	EPOXY RESIN FLOORING
EUI	ENERGY USE INTENSITY
EW	EACH WAY
EWC	ELECTRIC WATER COOLER
EXIST	EXISTING
EXP	EXPANSION
EXP	EXPOSED
EXT	EXTERIOR
F	FABRIC
F.O.	FACE OF
F.V.	FIELD VERIFY
FAB	FABRICATE(D)
FB	FACE BRICK
FD	FLOOR DRAIN
FDN	FOUNDATION
FE	FIRE EXTINGUISHER
FEC	FIRE EXTINGUISHER CABINET
FF	FINISH FLOOR
FH	FIRE HYDRANT
FHC	FIRE HOSE CABINET
FIG	FIGURE
FIN	FINISHED
FIX	FIXTURE
FL	FLOOR
FLASH	FLASHING
FLEX	FLEXIBLE
FLG	FLOORING
FLM	FULL LENGTH MIRROR
FLUOR	FLUORESCENT
FO	FINISH OPENING
FOC	FACE OF CONCRETE
FOF	FACE OF FINISH
FOM	FACE OF MASONRY
FOS	FACE OF STUD
FOW	FACE OF WALL
FP	FIREPROOFING
FR	FIRE RESISTANT
FRP	FIBERGLASS REINFORCED PANEL
FRT	FIRE RESISTANCE TREATED
FS	FLOOR SINK
FSS	FOLDING SHOWER SEAT
FT	FEET
FTG	FOOTING
FUT	FUTURE
FVC	FIRE VALVE CABINET
FWC	FABRIC WALL COVERING
G	GROUT
GA	GAUGE
GAL	GALLON
GALV	GALVANIZED
GB	GRAB BAR
GC	GENERAL CONTRACTOR
GD	GARBAGE DISPOSAL
GEN	GENERAL
GFA	GROSS FLOOR AREA
GL	GLUE LAMINATED
GL	GLASS
GMP	GUARANTTED MAXIMUM PRICE
GR	GUARD RAIL
GR	GRADE
GWB	GYPSUM WALL BOARD
GYP	GYPSUM
H	HEIGHT
HC	HOLLOW CORE
HD	HAND DRYER
HDBD	HARDBOARD
HDR	HEADER
HDWD	HARDWOOD
HDWR	HARDWARE
HM	HOLLOW METAL
HORIZ	HORIZONTAL
HR	HOUR
HSS	HOLLOW STRUCTURAL SHAPE
HVAC	HEATING VENTILATING AND AIR CONDITIONING
i.e.	THAT IS
IAW	IN ACCORDANCE WITH
IBC	INTERNATIONAL BUIDLING CODE
ID	INSIDE DIAMETER
IF	INSIDE FACE
IJ	ISOLATION JOINT
IJS	IN JOIST SPACE
IN	INCH
INC	INCLUDE(ING)
INSUL	INSULATION
INT	INTERIOR
JAN	JANITOR
JCT	JUNCTION
JFB	JOINT FILLER BOARD
JST	JOIST
JT	JOINT
KCJ	KEYED CONSTRUCTION JOINT
KD	KNOCKDOWN
KH	KITCHEN HOOD
KIT	KITCHEN
L	ANGLE
LAB	LABORATORY
LAM	LAMINATED
LAV	LAVATORY
LB(S), #	POUND(S)
LBR	LUMBER
LDG	LOADING
LF	LINEAR FOOT
LG	LENGTH (LONG)
LG	LAMINATED GLASS
LIN	LINEAR
LINO	LINOLEUM
LKR	LOCKER
LOC	LOCATION
LONG	LONGITUDINAL
LSC	LIFE SAFETY CODE
LTG	LIGHTING
LV	LOUVER
LWC	LIGHT WEIGHT CONCRETE
MAG	MAGNETIC
MAINT	MAINTENANCE
MAN	MANUAL
MAS	MASONRY
MATL	MATERIAL
MAX	MAXIMUM
MB	MOP BASIN
MBD	MARKER BOARD
MBH	MOP/BROOM HOLDER
MC	MEDICINE CABINET
MECH	MECHANICAL
MEMB	MEMBRANE
MEZZ	MEZZANINE
MFR	MANUFACTURER
MH	MANHOLE
MIN	MINIMUM
MIR	MIRROR
MISC	MISCELLANEOUS
MTD	MOUNTED
MTG	MOUNTING
MUL	MULLION
N	NORTH
NA	NOT APPLICABLE
NC	NOISE CRITERIA
NFPA	NATIONAL FIRE PROTECTION ASSOCIATION
NIC	NOT IN CONTRACT
NOM	NOMINAL
NTS	NOT TO SCALE
NWC	NORMAL WEIGHT CONCRETE
O to O	OUT TO OUT
OA	OVERALL
OC	ON CENTER
OFCI	OWNER FURNISHED CONTRACTOR INSTALLED
OFF	OFFICE
OFOI	OWNER FURNISHED OWNER INSTALLED
OPG(S)	OPENING(S)
OPP	OPPOSITE
OSHA	OPERATIONAL SAFETY AND HEALTH ADMINISTRATION
OTB	OPEN TO BELOW
OVFL	OVERFLOW
OVHD	OVERHEAD
P	PAINT
PAR	PARALLEL
PB	PARTICLE BOARD
PC	PRECAST CONCRETE
PCT	PORCELAIN CERAMIC TILE
PD	PANIC DEVICE
PENT	PENTHOUSE
PERF	PERFORATED
PERP	PERPENDICULAR
PG	PATTERN GLASS
PIG	PATTERN INSULATING GLASS
PL	PLATE
PL	PROPERTY LINE
PLAM	PLASTIC LAMINATE
PLBG	PLUMBING
PLYWD	PLYWOOD
PR	PAIR
PREFAB	PREFABRICATED
PROJ	PROJECT(OR) (ION)
PS	PROJECTION SCREEN
PT	POINT
PTD	PAPER TOWEL DISPENSER
PTD/R	COMBINATION TOWEL DISPENSER/RECEPTACLE
PTN	PARTITION
PVC	POLYVINYL CHLORIDE
QT	QUARRY TILE
QTR RND	QUARTER ROUND
QTY	QUANTITY
RAD	RADIUS
RB	RUBBER BASE
RC	REMOTE CONTROL
RCP	REFLECTED CEILING PLAN
RD	ROOF DRAIN
REF	REFERENCE
REFL	REFLECTED
REM	REMOVABLE
REQ(D)	REQUIRE(D)
RESIL	RESILIENT
REV	REVISION(S)
RF	RESILIENT FLOORING
RFM	RECESSED FLOOR MAT
RH	ROBE HOOK
RI&C	ROUGH IN AND CONNECT
RM	ROOM
RND	ROUND
RUB	RUBBER FLOOR
S	SOUTH
SAT	SPRAYED ACOUSTIC TREATMENT
SAW	SOUND ABSORBING WALL UNITS
SB	SPLASH BLOCK
SC	SOLID CORE
SCD	SEAT COVER DISPENSER
SCHED	SCHEDULE
SCR	SHOWER CURTAIN ROD
SD	SOAP DISPENSER
SECT	SECTION
SECY	SECRETARY
SG	SPANDRAL GLASS
SGL	SINGLE
SH	SHOWER
SHM	SECURITY HOLLOW METAL
SHT	SHEET
SIM	SIMILAR
SLNT	SEALANT
SM	SHEET METAL
SND	SANITARY NAPKIN DISPOSAL
SNV	SANITARY NAPKIN VENDOR
SPEC	SPECIFICATION(S)
SPL	SOUND PRESSURE LEVEL
SQ	SQUARE
SS	STAINLESS STEEL
SSA	STORM SHELTER AREA
SSU	SOLID SURFACE
ST	STONE
ST	STAIR
STAG'D	STAGGERED
STC	SOUND TRANSMISSION CLASS
STD	STANDARD
STGR	STRINGER
STL	STEEL
STOR	STORAGE
STRUCT	STRUCTURAL
SUBFL	SUBFLOOR
SURF	SURFACE
SUSP	SUSPENDED
SV	SHEET VINYL
SYM	SYMETRICAL
T&G	TONGUE AND GROOVE
T.O.	TOP OF
TAN	TANGENT
TB	TOWEL BAR
TBD	TACK BOARD
TCP	TOILET COMPARTMENT PARTITION
TEMP	TEMPORARY
TERR	TERRAZZO
TG	TINTED FLOAT GLASS
TH	THRESHOLD
TI	TENANT IMPROVEMENT
TIG	TINTED INSULATING GLASS
TOP	TOP OF PAVING
TRANS	TRANSVERSE
TTD	TOILET TISSUE DISPENSER
TTG	TINTED TEMPERED FLOAT GLASS
TTIG	TINTED TEMPERED INSULATING GLASS
TW	TACK WALL
TYP	TYPICAL
UL	UNDERWRITERS LABORATORIES
UNEX	UNEXCAVATED
UNFIN	UNFINISHED
UNO	UNLESS NOTED OTHERWISE
UR	URINAL
US	UTILITY SHELF
UTIL	UTILITY
VB	VAPOR BARRIER
VB	VINYL BASE
VCB	VENTED COVE BASE
VERT	VERTICAL
VEST	VESTIBULE
VF	VINYL FLOOR
VOC	VOLIITILE ORGANIC COMPOUND
VOL	VOLUME
VP	VENEER PLASTER
VT	VINYL TILE
VWC	VINYL WALL COVERING
W	WEST
W/	WITH
W/O	WITHOUT
WB	WALL BASE
WC	WATER CLOSET
WC	WALL COVERING
WD	WOOD
WDF	WOOD FLOORING
WDW	WINDOW
WG	POLISHED WIRE GLASS
WI	WROUGHT IRON
WOM	WALK OFF MAT
WR	WASTE RECEPTACLE
WRB	WEATHER RESISTANT BARRIER
WWF	WELDED WIRE FABRIC
YD	YARD

GENERAL SYMBOLS

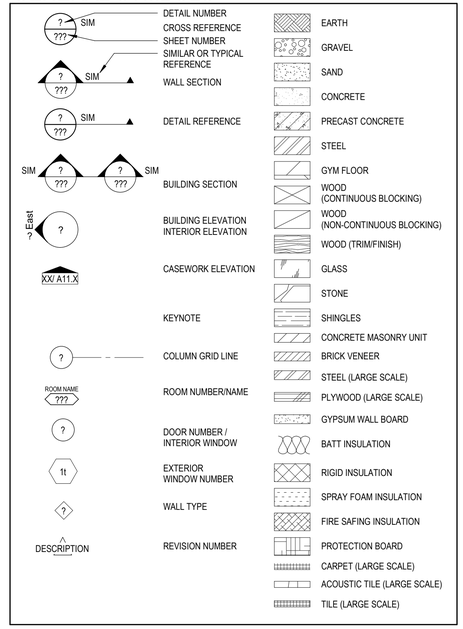

SITE SYMBOLS

BID/PERMIT SET

CONDITIONAL USE NUMBER: CU2015-0016
DESIGN REVIEW NUMBER: DR2018-0114
SITE DEVELOPMENT PERMIT NUMBER: TBD
BUILDING PERMIT NUMBER: TBD

REGISTERED ARCHITECT
USA K. JOHNSON
SEATTLE, WA
6279
STATE OF OREGON

SYMBOLS AND ABBREVIATIONS
ACMA
BEAVERTON SCHOOL DISTRICT

0.2
74-18109-00
03/14/19
REVISIONS

DLR Group
Architecture Engineering Planning Interiors

© 2019, DLR Group Architecture & Engineering Inc., an Oregon corporation, ALL RIGHTS RESERVED

C:\Revit\74-18109-00_ACMA_AR_2018_Central_fmueller.rvt
3/13/2019 4:46:35 PM

EXISTING CONDITIONS MAP

NO.	REVISIONS	DATE
1	ADDED WETLAND DATA	6/7/18
2	UPDATED COORDINATE SYSTEM	6/12/18
3	ELEVATION UPDATE	6/22/18

IN LOT G "STEEL'S ADDITION"
LOCATED IN THE
SE 1/4 OF SECTION 10,
T.1S., R.1W., W.M.
WASHINGTON COUNTY, OREGON

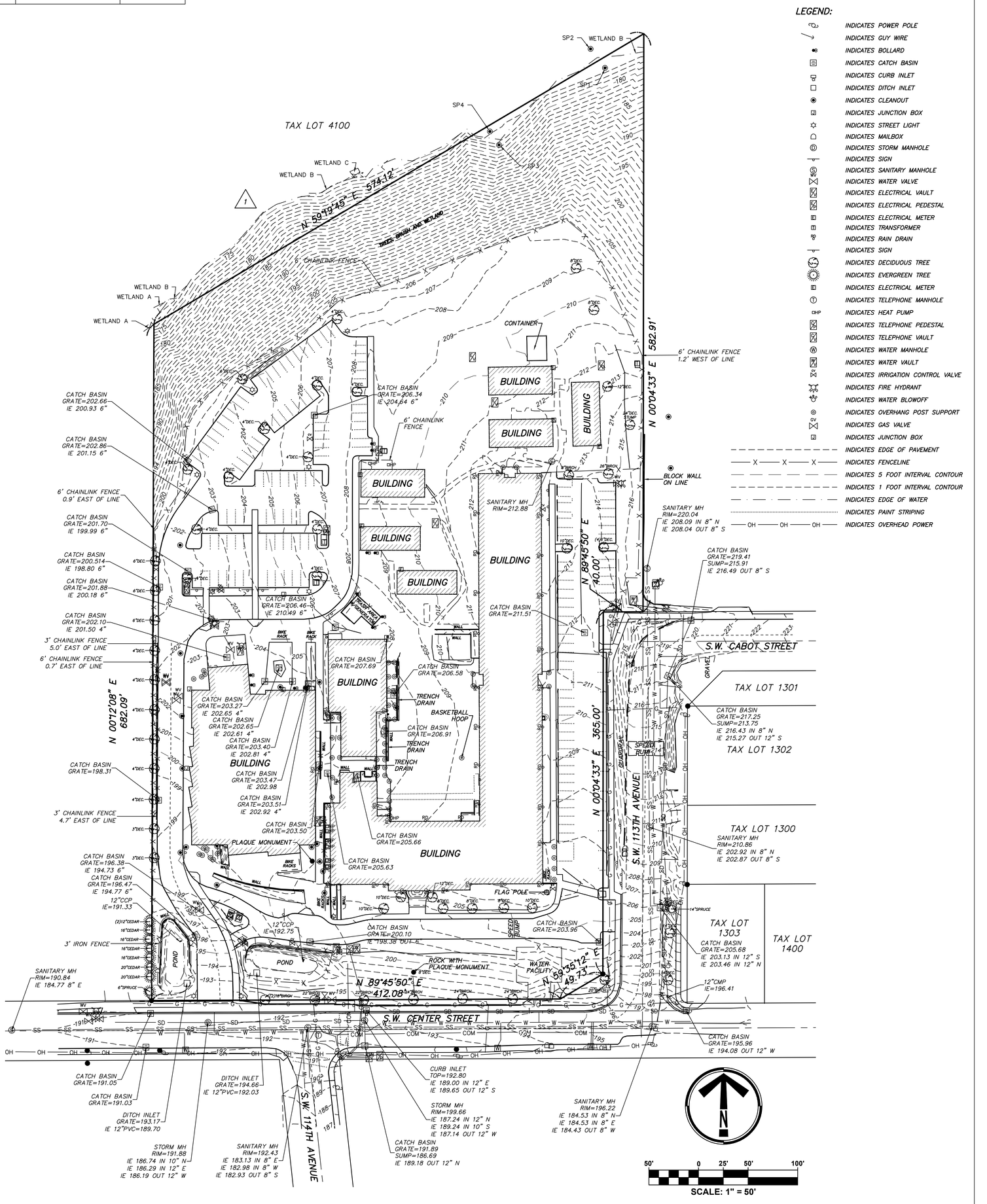

SURVEY NOTES:

THE DATUM FOR THIS SURVEY IS BASED UPON NGS OPUS SOLUTION REPORT TO EMERIO CONTROL POINT NO. 1. ELEVATION=219.273 NOVD 29 (COMPUTED USING GEOID12B)

A TRIMBLE 5600 SERIES ROBOTIC INSTRUMENT WAS USED TO COMPLETE THIS SURVEY.

BOUNDARIES WERE DRAWN PER PLAT AND MONUMENTS FOUND. THIS IS NOT A BOUNDARY SURVEY. NO PROPERTY CORNERS WERE SET IN THIS SURVEY.

NO WARRANTIES ARE MADE AS TO MATTERS OF UNWRITTEN TITLE, SUCH AS ADVERSE POSSESSION, ESTOPPEL, ACQUIESCENCE, ETC.

THE UNDERGROUND UTILITIES AS SHOWN ON THIS MAP HAVE BEEN LOCATED FROM FIELD SURVEY OF ABOVE GROUND STRUCTURES AND AS MARKED BY OTHERS. THE SURVEYOR MAKES NO GUARANTEE THAT THE UNDERGROUND UTILITIES SHOWN COMPROMISE ALL SUCH UTILITIES IN THE AREA, EITHER IN SERVICE OR ABANDONED. THE SURVEYOR FURTHER DOES NOT WARRANT THAT THE UNDERGROUND UTILITIES ARE IN THE EXACT LOCATION INDICATED, ALTHOUGH HE DOES CERTIFY THAT THEY ARE LOCATED AS ACCURATELY AS POSSIBLE FROM INFORMATION AVAILABLE. THE SURVEYOR HAS NOT PHYSICALLY LOCATED THE UNDERGROUND UTILITIES. SUBSURFACE AND ENVIRONMENTAL CONDITIONS WERE NOT EXAMINED OR CONSIDERED AS A PART OF THIS SURVEY. NO STATEMENT IS MADE CONCERNING THE EXISTENCE OF UNDERGROUND OR OVERHEAD CONTAINERS OR FACILITIES THAT MAY AFFECT THE USE OR DEVELOPMENT OF THIS TRACT. THIS SURVEY DOES NOT CONSTITUTE A TITLE SEARCH BY SURVEYOR.

NO TITLE REPORT WAS SUPPLIED OR USED IN THE PREPARATION OF THIS MAP. THERE MAY EXIST EASMENTS, CONDITIONS, OR RESTRICTIONS THAT COULD AFFECT THE TITLE OF THIS PROPERTY. NO ATTEMPT HAS BEEN MADE IN THIS SURVEY TO SHOW SUCH MATTERS THAT MAY AFFECT TITLE.

EMERIO Design
8285 SW NIMBUS AVENUE, SUITE 180
BEAVERTON, OREGON 97008
PH: (503) 746-8812
FAX: (503) 639-9592

JULY 11, 2018

JOB: 439-002

BEAVERTON SCHOOL DISTRICT

ARTS & COMMUNICATION MAGNET ACADEMY

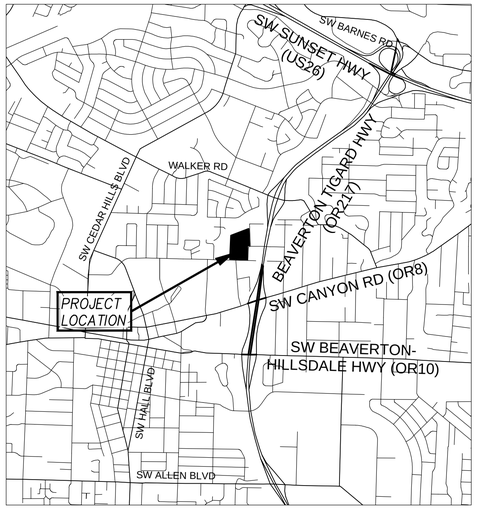

VICINITY MAP

NOT TO SCALE

"This Design Complies with ORS 92.044(7), In That No Utility Infrastructure is Designed to be Within 1 Ft. of a Survey Monument Location Shown on a Subdivision or Partition Plat. No Design Modification Nor Final Field Location Change Shall be Permitted If It Would Cause Any Utility Infrastructure To Be Placed Within the Prohibited Area."



ATTENTION:
Oregon Law Requires You To Follow Rules Adopted By The Oregon Utility Notification Center. Those Rules Are Set Forth In OAR 952-001-0010 Through OAR 952-001-0090. You May Obtain Copies Of The Rules From The Center.

UTILITY LOCATE REQUIREMENTS

EXISTING UTILITY LOCATIONS ARE APPROXIMATE ONLY. IN ORDER TO PROTECT EXISTING UNDERGROUND UTILITIES, CONTRACTORS PERFORMING WORK SHOWN ON THESE PLANS MUST NOTIFY UTILITIES AND PUBLIC AGENCIES AT LEAST 48 BUSINESS HOURS IN ADVANCE OF, AND NO MORE THAN 10 BUSINESS DAYS BEFORE, BEGINNING EXCAVATION, IN ACCORDANCE WITH THE PROVISIONS OF OAR 952-001-0090. LIMITS OF WORK SHALL BE PRE-MARKED FOR THE UTILITY LOCATORS. POTHOLE ALL CROSSINGS AS NECESSARY TO PREVENT GRADE AND ALIGNMENT CONFLICTS. REPORT ALL CONFLICTS TO THE ENGINEER IMMEDIATELY. PROTECT EXISTING UTILITIES AT ALL TIMES DURING CONSTRUCTION. CALL THE ONE CALL UTILITY NOTIFICATION CENTER AT 503-246-6699 FOR UTILITY LOCATES. ANY DAMAGE TO EXISTING UTILITIES, WHETHER THEY'RE SHOWN ON THESE DRAWINGS OR NOT, WILL BE REPAIRED OR REPLACED AT THE CONTRACTOR'S EXPENSE.

ATTENTION: OREGON LAW REQUIRES ALL EXCAVATORS TO FOLLOW RULES ADOPTED BY THE OREGON UTILITY NOTIFICATION CENTER. THOSE RULES ARE SET FORTH IN OAR 952-001-0010 THROUGH OAR 952-001-0090. YOU MAY OBTAIN COPIES OF THE RULES BY CALLING THE CENTER. (NOTE: THE TELEPHONE NUMBER OF THE ADMINISTRATION OFFICE FOR THE OREGON UTILITY NOTIFICATION CENTER IS 503-232-1987).

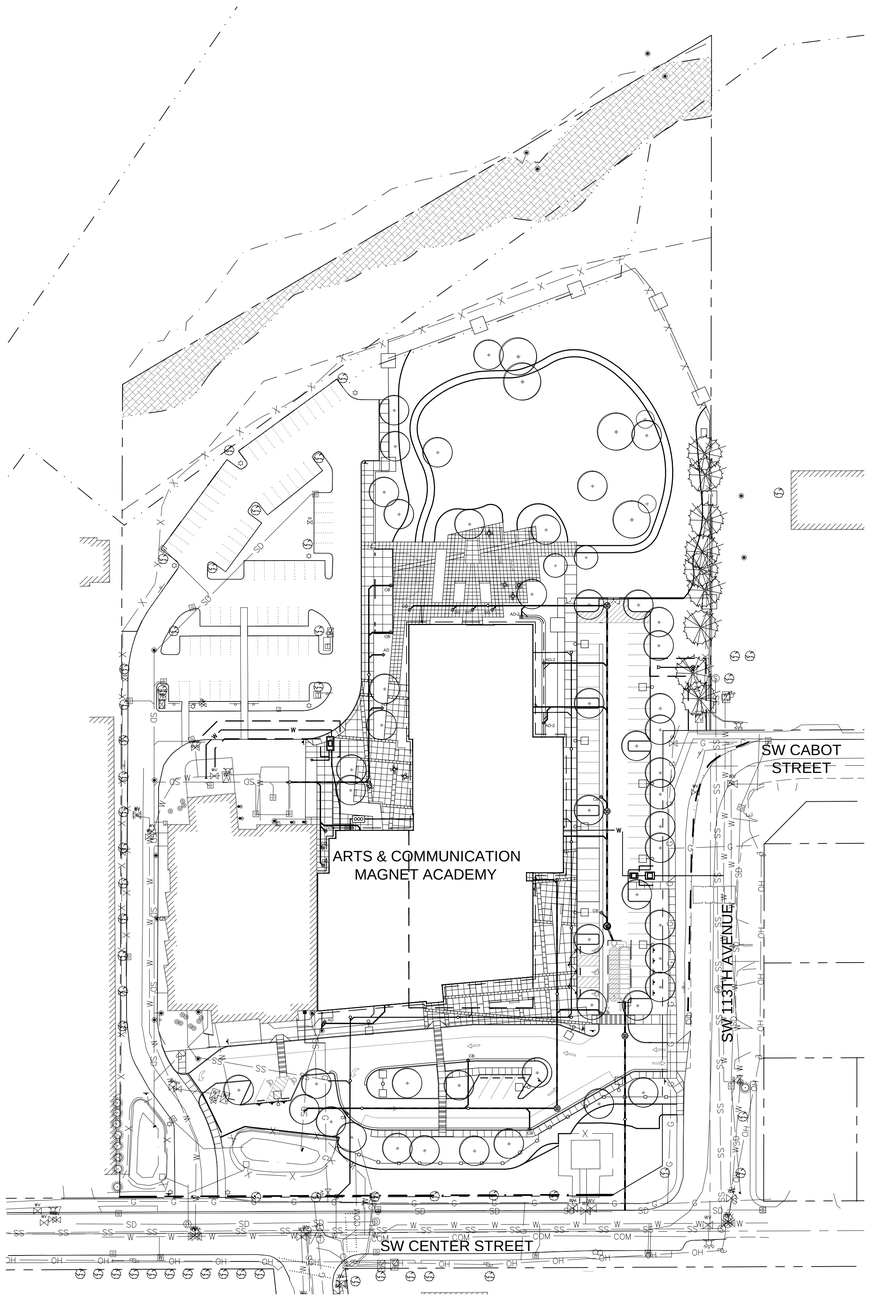

OVERALL SITE MAP

CIVIL SHEET INDEX

C1.0	CIVIL COVER SHEET
C1.1	NOTES AND LEGEND
C2.0	OVERALL EXISTING CONDITIONS AND DEMO PLAN
C2.1	EXISTING CONDITIONS AND DEMO PLAN
C2.2	EXISTING CONDITIONS AND DEMO PLAN
C2.3	EXISTING CONDITIONS AND DEMO PLAN
C2.4	EXISTING CONDITIONS AND DEMO PLAN
C2.5	EXISTING CONDITIONS AND DEMO PLAN
C3.0	OVERALL MASS GRADING PLAN
C3.1	MASS GRADING PLAN
C3.2	MASS GRADING PLAN
C3.3	MASS GRADING PLAN
C3.4	MASS GRADING PLAN
C3.5	MASS GRADING PLAN
C3.6	SITE GRADING SECTIONS
C4.0	PAVING PLAN
C5.0	OVERALL UTILITY PLAN
C5.1	UTILITY PLAN
C5.2	UTILITY PLAN
C5.3	UTILITY PLAN
C5.4	UTILITY PLAN
C5.5	UTILITY PLAN
C5.6	UTILITY DETAILS
C5.7	UTILITY DETAILS
C5.8	UTILITY DETAILS
C5.9	UTILITY DETAILS
C5.10	UTILITY DETAILS
C5.11	UTILITY DETAILS
C5.12	UTILITY DETAILS
EC1.0	ESC COVER SHEET
EC1.1	ESC NOTES
EC2.0	CLEARING & DEMOLITION ESCP
EC3.0	CONSTRUCTION STAGING PLAN
EC4.0	GRADING, STREET, AND UTILITY ESCP
EC5.0	ESC DETAILS

SITE INFORMATION

11375 SW CENTER STREET
BEAVERTON, OREGON 97005

TAX LOT 2000, MAP 1S 1 10 DB

SITE AREA: 8.94 ACRES

TOTAL PROJECT AREA: 5.08 ACRES

TOTAL DISTURBED AREA: 5.08 ACRES

EXISTING IMPERVIOUS AREA:
PRIVATE = 207,743 SF
PUBLIC = 6,394 SF

PROPOSED IMPERVIOUS AREA:
PRIVATE = 199,126 SF
BUILDINGS = 47,131 SF
OTHER = 151,995 SF
PUBLIC = 6,021 SF
NEW = 1,326 SF

RELATED PERMITS

LAND USE APPROVALS
CU2018-0016 / DR2018-0114

DEQ 1200-C PERMIT
DEQ PERMIT NO. XXXXX

SITE DEVELOPMENT PERMIT
PERMIT NO. XXXXX

SITE PLUMBING PERMIT
PERMIT NO. XXXXX

0 30 60 120
SCALE: 1" = 60'

PROJECT TEAM

OWNER:

BEAVERTON SCHOOL DISTRICT
16550 SW MERLO ROAD
BEAVERTON, OREGON 97003
PH: (503) 356-4575
CONTACT: LESLIE IMES, LESLIE_IMES@BEAVERTON.K12.OR.US

ARCHITECT:

DLR GROUP
421 SW SIXTH AVENUE, SUITE 1212
PORTLAND, OREGON 97204-1613
PH: (503) 274-2675
CONTACT: JANE GOODING, JGOODING@DLRGROUP.COM

CIVIL ENGINEER:

HARPER HOUF PETERSON RIGHELLIS INC.
205 SE SPOKANE STREET, SUITE 200
PORTLAND, OREGON 97202
PH: (503) 221-1131 FAX: (503) 221-1171
CONTACT: JANELLE BRANNAN, P.E., JANELLEB@HHPR.COM

LANDSCAPE ARCHITECT:

CAMERON MCCARTHY
160 EAST BROADWAY
EUGENE, OREGON 97401
PH: (503) 229-3122 FAX: (503) 273-8878
CONTACT: MATT KOEHLER, KOEHLER@CAMERONMCCARTHY.COM

ELECTRICAL ENGINEER:

DLR GROUP
51 UNIVERSITY STREET, SUITE 600
SEATTLE, WA 98101
PH: (206) 461-6000
CONTACT: OANA STEPHENS, OSTEPHENS@DLRGROUP.COM

TRAFFIC ENGINEER:

DKS ASSOCIATES
720 SW WASHINGTON STREET, SUITE 500
PORTLAND, OREGON 97205
PH: (503) 243-3500 FAX: (503) 243-1934
CONTACT: RAY DELAHANTY, RJD@DKSASSOCIATES.COM

GEOTECHNICAL ENGINEER:

GRI
9750 SW NIMBUS AVENUE
BEAVERTON, OR 97008
PH: (503) 641-3478
CONTACT: WES SPANG, WSPANG@GRI.COM

Harper Houf Peterson Righellis Inc.
ENGINEERS • PLANNERS
LANDSCAPE ARCHITECTS • SURVEYORS
205 SE Spokane Street, Suite 200, Portland, OR 97202
phone: 503.221.1131 www.hhpr.com fax: 503.221.1171

BID/PERMIT SET

CONDITIONAL USE NUMBER: CU2018-0016
DESIGN REVIEW NUMBER: DR2018-0114
SITE DEVELOPMENT PERMIT NUMBER: TBD
BUILDING PERMIT NUMBER: TBD

REGISTERED PROFESSIONAL ENGINEER
59,971
OREGON
JUNE 11, 2005
JANELLE LYNN BRANNAN
EXPIRES: 12/31/2019

CIVIL COVER SHEET
ACMA
BEAVERTON SCHOOL DISTRICT

C1.0
74-18109-00
03/14/19
REVISIONS

DLR Group
Architecture Planning Interiors

© 2018, DLR Group Architecture & Planning Inc., an Oregon corporation, ALL RIGHTS RESERVED

EXISTING LEGEND:

- POWER POLE
- GUY WIRE
- BOLLARD
- CATCH BASIN
- CURB INLET
- DITCH INLET
- CLEANOUT
- JUNCTION BOX
- STREET LIGHT
- MAILBOX
- STORM MANHOLE
- SIGN
- SANITARY MANHOLE
- WATER VALVE
- ELECTRICAL VAULT
- ELECTRICAL PEDESTAL
- ELECTRICAL METER
- TRANSFORMER
- RAIN DRAIN
- SIGN
- DECIDUOUS TREE
- EVERGREEN TREE
- ELECTRICAL METER
- TELEPHONE MANHOLE
- HEAT PUMP
- TELEPHONE PEDESTAL
- TELEPHONE VAULT
- WATER MANHOLE
- WATER VAULT
- IRRIGATION CONTROL VALVE
- FIRE HYDRANT
- WATER BLOWOFF
- OVERHANG POST SUPPORT
- GAS VALVE
- JUNCTION BOX

- EDGE OF PAVEMENT
- FENCELINE
- 5 FOOT INTERVAL CONTOUR
- 1 FOOT INTERVAL CONTOUR
- EDGE OF WATER
- PAINT STRIPING
- OVERHEAD POWER
- STORM SEWER
- SANITARY SEWER
- WATER LINE
- GAS LINE
- ELECTRICAL LINE
- COMMUNICATIONS LINE

PROPOSED LEGEND:

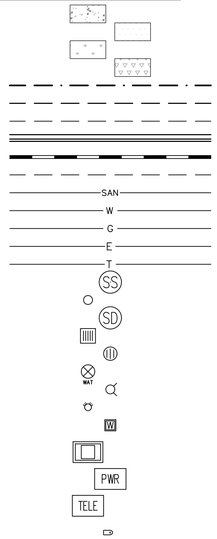

- CONCRETE
- ASPHALT CONCRETE
- LANDSCAPING
- SWALE
- RIGHT-OF-WAY
- UTILITY EASEMENT
- SAWCUT
- CURB AND GUTTER
- STORM SEWER LINE
- PERFORATED STORM PIPE
- SANITARY SEWER LINE
- WATER LINE
- GAS LINE
- ELECTRIC LINE
- TELECOM LINE
- SANITARY SEWER MANHOLE
- CLEANOUT
- STORM SEWER MANHOLE
- CATCH BASIN / DITCH INLET
- BEEHIVE INLET
- WATER VALVE
- FIRE HYDRANT
- FIRE DEPT. CONNECTION
- WATER METER
- WATER VAULT
- ELECTRICAL VAULT
- TELECOM VAULT
- MAILBOX

GENERAL NOTES:

1. WORK SHALL CONFORM TO INTERNATIONAL BUILDING CODE (IBC), UNIFORM PLUMBING CODE (UPC), CITY OF BEAVERTON STANDARDS, CLEAN WATER SERVICE DESIGN AND CONSTRUCTION STANDARDS (R&O 07-20), TVWD, AND TVF&R.
2. AS-BUILT INFORMATION SHOULD BE FIELD VERIFIED PRIOR TO CONSTRUCTION.
3. THE CONTRACTOR SHALL COMPLY WITH THE PROVISIONS OF O.R.S. 757.541 AND 757.571, INCLUDING NOTIFICATION OF ALL OWNERS OF UNDERGROUND FACILITIES AT LEAST 48 BUSINESS DAY HOURS PRIOR TO EXCAVATION. FIELD VERIFY LOCATION OF EXISTING UTILITIES PRIOR TO CONSTRUCTION.
4. PROVISIONS SHALL BE MADE BY THE CONTRACTOR TO KEEP ALL EXISTING UTILITIES IN SERVICE AND PROTECT THEM DURING CONSTRUCTION.
5. CONTRACTOR SHALL VERIFY LOCATION OF ALL EXISTING UTILITIES PRIOR TO CONSTRUCTION.
6. EXISTING MONUMENTS, PROPERTY CORNERS, AND SURVEY MARKERS SHALL BE PROTECTED. REPLACEMENT SHALL BE AT THE CONTRACTOR'S EXPENSE.

CITY OF BEAVERTON

1. ALL WORK SHALL BE CONSTRUCTED PER THE APPLICABLE SECTIONS OF THE CITY OF BEAVERTON ENGINEERING DESIGN MANUAL (ORDINANCE 4417) AND CLEAN WATER SERVICES DISTRICT'S DESIGN AND CONSTRUCTION STANDARDS (RESOLUTION AND ORDER 2007-20).
2. EXISTING UTILITY LOCATIONS ARE APPROXIMATE ONLY. IN ORDER TO PROTECT EXISTING UNDERGROUND UTILITIES, CONTRACTORS PERFORMING WORK SHOWN ON THESE PLANS MUST NOTIFY UTILITIES AND PUBLIC AGENCIES AT LEAST 48 BUSINESS HOURS IN ADVANCE OF, AND NO MORE THAN 10 BUSINESS DAYS BEFORE, BEGINNING EXCAVATION, IN ACCORDANCE WITH THE PROVISIONS OF OAR 952-001-0090. LIMITS OF WORK SHALL BE PRE-MARKED FOR THE UTILITY LOCATORS. POTHOLE ALL CROSSINGS AS NECESSARY TO PREVENT GRADE AND ALIGNMENT CONFLICTS. REPORT ALL CONFLICTS TO THE ENGINEER IMMEDIATELY. PROTECT EXISTING UTILITIES AT ALL TIMES DURING CONSTRUCTION. CALL THE ONE CALL UTILITY NOTIFICATION CENTER AT 503-246-6699 FOR UTILITY LOCATES. ANY DAMAGE TO EXISTING UTILITIES, WHETHER THEY'RE SHOWN ON THESE DRAWINGS OR NOT, WILL BE REPAIRED OR REPLACED AT THE CONTRACTOR'S EXPENSE.
   ATTENTION: OREGON LAW REQUIRES ALL EXCAVATORS TO FOLLOW RULES ADOPTED BY THE OREGON UTILITY NOTIFICATION CENTER. THOSE RULES ARE SET FORTH IN OAR 952-001-0010 THROUGH OAR 952-001-0090. YOU MAY OBTAIN COPIES OF THE RULES BY CALLING THE CENTER. (NOTE: THE TELEPHONE NUMBER OF THE ADMINISTRATION OFFICE FOR THE OREGON UTILITY NOTIFICATION CENTER IS 503-232-1987).
3. THE CONTRACTOR SHALL EXERCISE ALL DUE CARE IN PROTECTING PROPERTY ALONG THE ROUTE OF THE IMPROVEMENTS. THIS PROTECTION SHALL INCLUDE, BUT NOT BE LIMITED TO, TREES, YARDS, FENCES, DRAINAGE LINES, MAIL BOXES, DRIVEWAYS, SHRUBS, LAWNS, IRRIGATION SYSTEMS, WITHIN ANY RIGHTS-OF-WAYS AND EASEMENTS. IF ANY OF THE ABOVE HAVE BEEN DISTURBED, THEY SHALL BE RESTORED AS NECESSARY TO AS NEAR THEIR ORIGINAL CONDITION AS POSSIBLE OR REPLACED IN KIND.
4. THE CONTRACTOR SHALL PERFORM ALL THE WORK SHOWN ON THE DRAWINGS AND ALL INCIDENTAL WORK CONSIDERED NECESSARY TO COMPLETE THE PROJECT IN AN ACCEPTABLE MANNER.
5. THE CONTRACTOR AND/OR EACH SUB-CONTRACTOR SHALL HAVE A MINIMUM OF ONE SET OF CITY-APPROVED CONSTRUCTION PLANS ON THE JOB SITE AT ALL TIMES DURING EACH CONSTRUCTION PHASE WHILE WORK IS BEING DONE.
6. ALL MATERIAL SUPPLIERS SHALL SUBMIT TO THE ENGINEER PROOF OF MATERIAL(S) TESTED IN ACCORDANCE WITH SPECIFICATIONS. BY ACCEPTANCE OF THE CONTRACT WITH THE OWNER/DEVELOPER, THE CONTRACTOR CERTIFIES THAT ALL MATERIALS DELIVERED TO THE JOB SITE WILL MEET OR EXCEED THOSE SPECIFICATIONS. ANY MATERIAL NOT CONFORMING SHALL BE REMOVED FROM THE SITE AT NO ADDITIONAL COST TO THE OWNER.
7. FOLLOWING SUBSTANTIAL COMPLETION, THE DEVELOPER'S ENGINEER SHALL PROVIDE THREE PAPER-COPY, AS-BUILT AND RECORD DRAWING SETS OF ALL SHEETS IN THIS PLAN SET PLUS ANY APPROVED REVISIONS. AFTER WALK THROUGH AND PUNCH-LIST PREPARATION BY CITY CREWS, THE CITY INSPECTOR WILL REQUEST REVISIONS TO THE AS-BUILTS AND RECORD DRAWINGS. THE DEVELOPER'S ENGINEER SHALL THEN PROVIDE ONE SET OF MYLAR AS-BUILTS AND RECORD DRAWINGS AND AN ELECTRONIC COPY IN AUTOCAD FORMAT (DXF OR DWG FILES) ON DISK TO THE CITY INSPECTOR, PER CITY STANDARDS.
8. THE CONTRACTOR SHALL NOTIFY THE CITY INSPECTOR AT LEAST 48 HOURS (TWO FULL WORKING DAYS) PRIOR TO BEGINNING THE PROJECT. CONNECTIONS BETWEEN EXISTING INFRASTRUCTURE AND NEW WORK SHALL NOT BE MADE UNTIL NECESSARY INSPECTIONS AND TESTS HAVE BEEN COMPLETED ON THE NEW WORK AND IT IS FOUND TO CONFORM IN ALL RESPECTS TO THE REQUIREMENTS OF THE PLANS AND SPECIFICATIONS.

TRAFFIC CONTROL:

1. TRAFFIC CONTROL TO BE PERFORMED IN ACCORDANCE WITH THE MANUAL FOR UNIFORM TRAFFIC CONTROL DEVICES AND OREGON AMENDMENTS AS REQUIRED. THE CITY CAN REQUIRE ADDITIONAL TRAFFIC CONTROL MEASURES AS NEEDED TO PROVIDE FOR PUBLIC SAFETY.
2. ON RESIDENTIAL LOCAL STREETS, THE CONTRACTOR SHALL BE RESPONSIBLE TO PROVIDE ALL REQUIRED TRAFFIC CONTROL WHEN WORK IS BEING DONE IN THE RIGHT OF WAY.
3. A TRAFFIC CONTROL PLAN SHALL BE PREPARED AND SUBMITTED FOR REVIEW BY CITY, FOR BOTH CONSTRUCTION OPERATIONS AND AFTER-HOUR SITUATIONS.
4. ALL TRAFFIC CONTROL MEASURES NEED TO BE SUBMITTED TO THE CITY FOR REVIEW AND APPROVAL.

APPROVALS AND MODIFICATIONS:

1. ANY REVISION TO APPROVED PLANS MUST BE UNDER THE DIRECTION OF THE ENGINEER OF RECORD (OR COORDINATING DESIGN PROFESSIONAL).
2. REVISIONS TO WORK PERMITTED UNDER THE CITY OF BEAVERTON SITE DEVELOPMENT PERMIT SHALL BE AT THE DISCRETION OF THE CITY'S PROJECT INSPECTOR AS TO WHETHER THE REVISION IS SIGNIFICANT ENOUGH TO WARRANT REVIEW BY THE CITY ENGINEERING PLAN REVIEW STAFF. IF SO, THE ENGINEER SHALL SUBMIT FIVE (5) COPIES OF THE PROPOSED REVISION.
3. REVISIONS TO WORK PERMITTED UNDER THE CITY OF BEAVERTON RIGHT OF WAY PERMIT SHALL BE AT THE DISCRETION OF THE CITY INSPECTOR AS TO WETHER THE REVISION IS SIGNIFICANT ENOUGH TO WARRANT REVIEW BY THE CITY ENGINEERING PLAN REVIEW STAFF. IF SO, THE ENGINEER SHALL SUBMIT THE PROPOSED REVISION.
3. NO WORK AFFECTED BY THE REVISION SHALL BE DONE UNTIL APPROVED BY THE CITY SITE DEVELOPMENT ENGINEER.
4. THE CITY INSPECTOR AND THE ENGINEER OF RECORD MUST APPROVE ALL OTHER CHANGES PRIOR TO IMPLEMENTATION OF THE CHANGE.

STRUCTURAL FILLS:

1. ALL TREES, BRUSH AND DEBRIS WITHIN THE LIMITS OF THE RIGHT-OF-WAY AND ON THE AREAS TO BE FILLED SHALL BE REMOVED AND DISPOSED OF BY THE CONTRACTOR UNLESS OTHERWISE NOTED ON THE PLANS OR FLAGGED IN THE FIELD.
2. ALL AREAS OF CONSTRUCTION SHALL BE STRIPPED. STRIPPING SHALL CONSIST OF REMOVING THE TOPSOIL HUMUS. STRIPPING MATERIALS SHALL BE PLACED OR STOCKPILED BY THE CONTRACTOR ON SITE AS SHOWN ON THE PLANS AND PER INSTRUCTION BY THE INSPECTOR, OR HAULED OFF SITE TO AN APPROVED LOCATION.
3. EMBANKMENTS AND STRUCTURAL FILLS FOR ROADWAY CONSTRUCTION OR FILLS TO BE CONSTRUCTED ON BUILDABLE AREAS SHALL BE CONSTRUCTED FROM EXCAVATED MATERIALS ACCEPTABLE TO THE SOILS ENGINEER AND SHALL BE BROUGHT TO GRADE IN LIFTS NOT TO EXCEED 8"LOOSE MEASURE. EACH LIFT SHALL BE COMPACTED TO 95 PERCENT OF MAXIMUM DENSITY AS OBTAINED BY AASHTO T-99 COMPACTION TEST. COMBINATION TEST RESULTS SHALL BE SUBMITTED TO THE CITY INSPECTOR.
4. FILLS SHALL NOT BE CONSTRUCTED ON NATURAL SLOPES STEEPER THAN 2 HORIZONTAL TO 1 VERTICAL. ALL FILL SLOPES SHALL NOT EXCEED 2 HORIZONTAL TO 1 VERTICAL. NO ROCK OR SIMILAR IRREDUCIBLE MATERIAL WITH A MINIMUM DIMENSION GREATER THAN 12 INCHES SHALL BE BURIED OR PLACED IN THE FILLS.
5. IF SPRINGS OR GROUND WATER ARE ENCOUNTERED DURING CONSTRUCTION, THE CONTRACTOR SHALL ADVISE THE SOILS AND CIVIL ENGINEERS OF THE CONDITION FOUND AND COORDINATE ACTIVITIES IN A MANNER THAT WILL ALLOW THE ENGINEER(S) TIME TO REVIEW THE SITUATION AND PREPARE A PLAN TO PROPERLY DISPOSE OF THE WATER ENCOUNTERED FOR CITY APPROVAL AND PER CLEAN WATER SERVICES REQUIREMENTS.
6. ROCK BASE, ASPHALTIC CONCRETE PAVEMENT, CONCRETE PAVEMENT CURB AND SIDEWALK CONSTRUCTION SHALL BE AS SHOWN ON THE TYPICAL SECTIONS AND DETAIL SHEET AND IN ACCORDANCE WITH THE ABOVE REFERENCED SPECIFICATIONS.
7. THE CONTRACTOR SHALL CLEAN ALL SPILLED DIRT, GRAVEL OR OTHER FOREIGN MATERIAL CAUSED BY THE CONSTRUCTION OPERATIONS FROM ALL STREETS AND ROADS AT THE CONCLUSION OF EACH DAY OR OPERATION. CLEANING SHALL BE BY GRADER AND FRONT-END LOADER, SUPPLEMENTED BY POWER BRUSHING AND HAND LABOR UNLESS OTHERWISE APPROVED BY THE CITY. THE CONTRACTOR SHALL FOLLOW CITY AND CWS EROSION CONTROL PROCEDURES.
8. AS SOON AS PRACTICAL AFTER COMPLETION OF ALL PAVING AND GRAVEL SHOULDER RESURFACING, THE CONTRACTOR SHALL REMOVE ALL DIRT, MUD, ROCK GRAVEL AND OTHER FOREIGN MATERIAL FROM THE PAVED SURFACE AND STORM DRAINAGE SYSTEM.

PRIVATE UTILITIES NOTES:

STORM DRAINAGE

PRIVATE STORM DRAINAGE CONSTRUCTION SHALL BE IN ACCORDANCE WITH CITY OF BEAVERTON, THE INTERNATIONAL BUILDING CODE (IBC) AND THE UNIFORM PLUMBING CODE (UPC).

STORM DRAIN PIPE SHALL BE AS SHOWN ON PLAN, PVC ASTM 3034 SDR 35. STORM DRAIN PIPE WITH LESS THAN 3 FEET OF COVER IN VEHICULAR AREAS SHALL BE DUCTILE IRON.

THE CONTRACTOR SHALL TEST ALL PVC AND HDPE STORM PIPE FOR DEFLECTION AS PER CITY OF BEAVERTON AND CWS. A COPY OF THE TEST RESULTS SHALL BE SUBMITTED FOR REVIEW AND APPROVAL.

THE CONTRACTOR SHALL FLUSH THE ENTIRE STORM SYSTEM AND VIDEO INSPECT ALL STORM SEWER CONVEYANCE PIPES. A COPY OF THE REPORT AND VIDEO TAPE SHALL BE SUBMITTED FOR REVIEW AND APPROVAL.

CATCH BASINS SHALL BE INSTALLED TO FINISH GRADE.

ADJUST MANHOLES, CLEAN OUT AND AREA DRAIN RIMS TO FINISH GRADE.

CLEANOUTS SHALL HAVE GAS-TIGHT AND WATERTIGHT THREADED PLUG IN CONFORMANCE WITH PLUMBING CODE.

ALL RAIN DRAIN PIPING INSTALLED WITHIN 5.0 FEET OF A BUILDING TO BE SCHEDULE 40 PVC-D.W.V. PIPING OR APPROVED EQUAL. COORDINATE LOCATION OF RAIN DRAINS WITH PLUMBING PLANS

FOUNDATION DRAIN PIPE SHALL BE COORDINATED WITH STRUCTURAL AND ARCHITECTURAL PLANS AND DETAILS. AT FOUNDATION DRAIN CONNECTION INSTALL CLEANOUT AND ACCESSIBLE FLAPPER TYPE BACKWATER VALVE. SET RIM TO FINISH GRADE. COORDINATE FOUNDATION DRAIN CONNECTION POINTS WITH ARCHITECTURAL AND STRUCTURAL PLANS.

TRACER WIRE - 12-GAUGE STRANDED OR SOLID COPPER INSULATED HIGH MOLECULAR WEIGHT POLYETHYLENE (HMW-PE) TRACER WIRE. THE HMW-PE INSULATED COVER SHALL BE GREEN AND A MINIMUM 45 MIL THICK. THE WIRE SHALL BE RATED FOR 140 DEGREES FAHRENHEIT. INSTALL TRACER WIRE IN ALL TRENCHES FOR STORM SEWERS. PLACE THE TRACER WIRE DIRECTLY OVER THE PIPE CENTERLINE AND ON TOP OF THE PIPE ZONE MATERIAL, PARALLEL TO, AND ALONG THE ENTIRE LENGTH OF ALL NONMETALLIC PIPE.

SANITARY SEWER

ALL SANITARY SEWER CONSTRUCTION TO WITHIN THREE (3) FEET OF THE BUILDING SHALL BE PVC ASTM D3034 SDR 35 AND IN ACCORDANCE WITH CITY OF BEAVERTON AND CWS, THE INTERNATIONAL BUILDING CODE (IBC) AND UNIFORM PLUMBING CODE (UPC).

PRIVATE SANITARY SEWER PIPE WITHIN THREE (3) FEET OF THE BUILDING SHALL BE DRAIN WASTE VENT (DWV), IN ACCORDANCE WITH INTERNATIONAL BUILDING CODE (IBC) AND UNIFORM PLUMBING CODE (UPC).

CLEANOUTS SHALL HAVE GAS-TIGHT AND WATERTIGHT THREADED PLUG IN CONFORMANCE WITH PLUMBING CODE.

WHERE SANITARY LINES CROSS WATER LINES, THE SYSTEMS NEED TO BE CONSTRUCTED SUCH THAT THE CROSSING WILL OCCUR AT THE CENTER OF A PIPE SEGMENT FOR BOTH LINES.

PRIOR TO TESTING AND INSPECTION OF THE SANITARY PIPELINE, ALL PARTS OF THE SYSTEM SHALL BE CLEANED OF ALL DEBRIS.

TESTING OF PUBLIC SANITARY PIPELINE AND SANITARY MANHOLES SHALL BE IN ACCORDANCE WITH CITY OF BEAVERTON STANDARD SPECIFICATIONS.

TESTING OF PRIVATE SANITARY PIPELINE SHALL BE IN ACCORDANCE WITH INTERNATIONAL BUILDING CODE AND UNIFORM PLUMBING CODE.

ALL SANITARY PIPELINE SHALL PASS THE REQUIRED AIR TEST, MANDREL TEST, AND COMPACTION TEST. ALL SANITARY PIPELINE SHALL BE VIDEO INSPECTED, AND BE FREE OF VISIBLE LEAKS. SANITARY MANHOLES SHALL BE TESTED USING THE HYDROSTATIC TEST OR THE VACUUM TEST.

TRACER WIRE - 12-GAUGE STRANDED OR SOLID COPPER INSULATED HIGH MOLECULAR WEIGHT POLYETHYLENE (HMW-PE) TRACER WIRE. THE HMW-PE INSULATED COVER SHALL BE GREEN AND A MINIMUM 45 MIL THICK. THE WIRE SHALL BE RATED FOR 140 DEGREES FAHRENHEIT. INSTALL TRACER WIRE IN ALL TRENCHES FOR SANITARY SEWERS. PLACE THE TRACER WIRE DIRECTLY OVER THE PIPE CENTERLINE AND ON TOP OF THE PIPE ZONE MATERIAL, PARALLEL TO, AND ALONG THE ENTIRE LENGTH OF ALL NONMETALLIC PIPE.

MISC. UTILITIES

ELECTRICAL, TELEPHONE, GAS, AND TV INSTALLATION SHALL BE COORDINATED BY THE CONTRACTOR WITH THE APPROPRIATE UTILITY COMPANY INCLUDING REQUIREMENTS FOR UTILITY CROSSING SLEEVES.

ALL PROPOSED POWER, TELEPHONE, GAS, AND TV SERVICES ON SITE SHALL BE PLACED UNDERGROUND.

TRENCH BACKFILL WITHIN THE PUBLIC RIGHT OF WAY TO BE CRUSHED ROCK. THIS APPLIES TO ALL UTILITY INSTALLATIONS: STORM, SANITARY, WATER, IRRIGATION CROSSINGS, PRIVATE UTILITIES.

PLACE DETECTABLE MARKING TAPE AND TRACER WIRE IN THE TRENCH DIRECTLY ABOVE, PARALLEL TO, AND ALONG THE ENTIRE LENGTH OF ALL NONMETALLIC PIPE AND CONDUIT.

GAS SERVICES SHALL BE MORE THAN 10 FT AWAY FROM WATER SERVICES AND MORE THAN 18" BELOW WATER SERVICES AND CROSSINGS.

WATER SERVICE

CONTRACTOR SHALL COORDINATE WATER SERVICE CONNECTIONS TO THE BUILDING WITH THE SCHOOL AND/OR ARCHITECT PRIOR TO CONSTRUCTION. CONTRACTOR SHALL PROVIDE 48 HOUR NOTICE TO THE SCHOOL DISTRICT BEFORE TURNING OFF THE WATER.

ALL PIPE SHALL HAVE A MINIMUM OF 36" OF COVER MEASURED FROM FINISH GRADE.

UPON COMPLETION OF THE INSTALLATION OF THE WATER SYSTEM ALL LINES SHALL BE FLUSHED AND DISINFECTED IN CONFORMANCE WITH HEALTH DIVISION GUIDELINES AND CITY OF BEAVERTON REQUIREMENTS.

FIRE SERVICE PIPE SHALL BE DUCTILE IRON CLASS 52. ALL JOINTS SHALL BE RESTRAINED.

DOMESTIC SERVICE 3" AND LARGER SHALL BE DUCTILE IRON CLASS 52. ALL JOINTS SHALL BE RESTRAINED.

ALL WATER PIPE SHALL COMPLY WITH AWWA STANDARDS AND UL APPROVED.

TRACER WIRE - 12-GAUGE STRANDED OR SOLID COPPER INSULATED HIGH MOLECULAR WEIGHT POLYETHYLENE (HMW-PE) TRACER WIRE. THE HMW-PE INSULATED COVER SHALL BE GREEN AND A MINIMUM 45 MIL THICK. THE WIRE SHALL BE RATED FOR 140 DEGREES FAHRENHEIT. INSTALL TRACER WIRE IN ALL TRENCHES FOR WATER LINE. PLACE THE TRACER WIRE DIRECTLY OVER THE PIPE CENTERLINE AND ON TOP OF THE PIPE ZONE MATERIAL, PARALLEL TO, AND ALONG THE ENTIRE LENGTH OF ALL NONMETALLIC PIPE.

Harper Houf Peterson Righellis Inc.
ENGINEERS • PLANNERS
LANDSCAPE ARCHITECTS • SURVEYORS
205 SE Spokane Street, Suite 200, Portland, OR 97202
phone: 503.221.1131 www.hhpr.com fax: 503.221.1171

BID/PERMIT SET

CONDITIONAL USE NUMBER: CU2018-0016
DESIGN REVIEW NUMBER: DR2018-0114
SITE DEVELOPMENT PERMIT NUMBER: TBD
BUILDING PERMIT NUMBER: TBD

REGISTERED PROFESSIONAL ENGINEER
59,971
OREGON
JUNE 11, 2005
JANELLE LYNN BRANNAN

EXPIRES: 12/31/2019

NOTES AND LEGEND
ACMA
BEAVERTON SCHOOL DISTRICT

C1.1
74-18109-00
03/14/19
REVISIONS

DLR Group
Architecture Planning Interiors

© 2018, DLR Group Architecture & Planning Inc., an Oregon corporation, ALL RIGHTS RESERVED

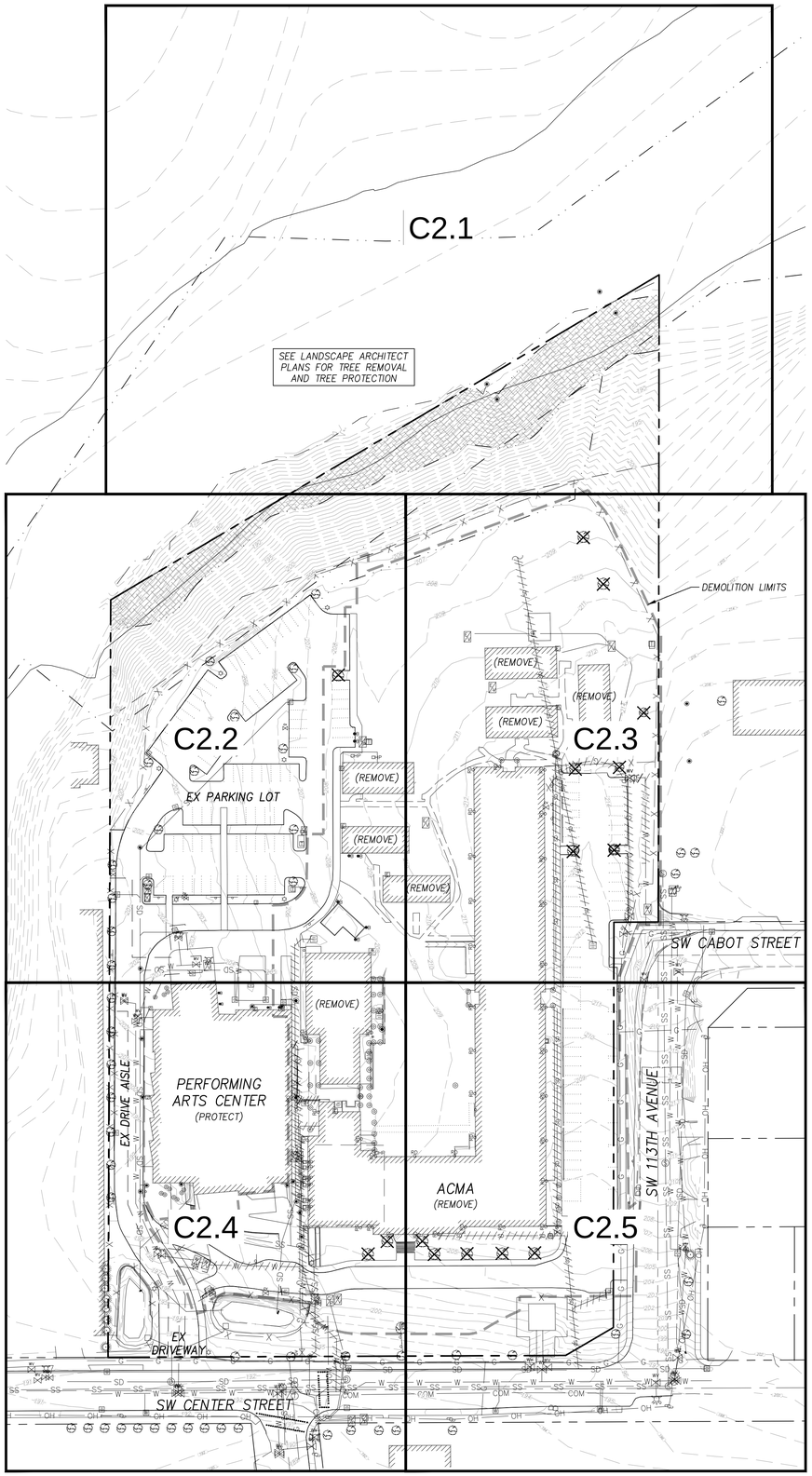

IN LOT G "STEEL'S ADDITION" LOCATED IN THE
SE 1/4 OF SECTION 10,
T.1S., R.1W., W.M.
WASHINGTON COUNTY, OREGON

Harper
Houf **P**eterson
Righellis **I**nc.
ENGINEERS•PLANNERS
LANDSCAPE ARCHITECTS•SURVEYORS
205 SE Spokane Street, Suite 200, Portland, OR 97202
phone: 503.221.1131 www.hhpr.com fax: 503.221.1171

LEGEND:

- POWER POLE
- GUY WIRE
- BOLLARD
- CATCH BASIN
- CURB INLET
- DITCH INLET
- CLEANOUT
- JUNCTION BOX
- STREET LIGHT
- MAILBOX
- STORM MANHOLE
- SIGN
- SANITARY MANHOLE
- WATER VALVE
- ELECTRICAL VAULT
- ELECTRICAL PEDESTAL
- ELECTRICAL METER
- TRANSFORMER
- RAIN DRAIN
- SIGN
- DECIDUOUS TREE
- EVERGREEN TREE
- ELECTRICAL METER
- TELEPHONE MANHOLE
- HEAT PUMP
- TELEPHONE PEDESTAL
- TELEPHONE VAULT
- WATER MANHOLE
- WATER VAULT
- IRRIGATION CONTROL VALVE
- FIRE HYDRANT
- WATER BLOWOFF
- OVERHANG POST SUPPORT
- GAS VALVE
- JUNCTION BOX
- EDGE OF PAVEMENT
- FENCELINE
- 5 FOOT INTERVAL CONTOUR
- 1 FOOT INTERVAL CONTOUR
- EDGE OF WATER
- PAINT STRIPING
- OVERHEAD POWER
- UTILITY DEMO
- STORM SEWER
- SANITARY SEWER
- WATER LINE
- GAS LINE
- ELECTRICAL LINE
- COMMUNICATIONS LINE

SITE INFORMATION

11375 SW CENTER STREET
BEAVERTON, OREGON 97005

TAX LOT 2000, MAP 1S 1 10 DB

SITE AREA: 8.94 ACRES

SURVEY NOTES:

THE DATUM FOR THIS SURVEY IS BASED UPON NGS OPUS SOLUTION REPORT TO EMERIO CONTROL POINT NO. 1. ELEVATION=222.782 NAVD 88 (COMPUTED USING GEOID12B)

A TRIMBLE 5600 SERIES ROBOTIC INSTRUMENT WAS USED TO COMPLETE THIS SURVEY.

BOUNDARIES WERE DRAWN PER PLAT AND MONUMENTS FOUND. THIS IS NOT A BOUNDARY SURVEY. NO PROPERTY CORNERS WERE SET IN THIS SURVEY.

NO WARRANTIES ARE MADE AS TO MATTERS OF UNWRITTEN TITLE, SUCH AS ADVERSE POSSESSION, ESTOPPEL, ACQUIESCENCE, ETC.

THE UNDERGROUND UTILITIES AS SHOWN ON THIS MAP HAVE BEEN LOCATED FROM FIELD SURVEY OF ABOVE GROUND STRUCTURES AND AS MARKED BY OTHERS. THE SURVEYOR MAKES NO GUARANTEE THAT THE UNDERGROUND UTILITIES SHOWN COMPROMISE ALL SUCH UTILITIES IN THE AREA, EITHER IN SERVICE OR ABANDONED. THE SURVEYOR FURTHER DOES NOT WARRANT THAT THE UNDERGROUND UTILITIES ARE IN THE EXACT LOCATION INDICATED, ALTHOUGH HE DOES CERTIFY THAT THEY ARE LOCATED AS ACCURATELY AS POSSIBLE FROM INFORMATION AVAILABLE. THE SURVEYOR HAS NOT PHYSICALLY LOCATED THE UNDERGROUND UTILITIES. SUBSURFACE AND ENVIRONMENTAL CONDITIONS WERE NOT EXAMINED OR CONSIDERED AS A PART OF THIS SURVEY. NO STATEMENT IS MADE CONCERNING THE EXISTENCE OF UNDERGROUND OR OVERHEAD CONTAINERS OR FACILITIES THAT MAY AFFECT THE USE OR DEVELOPMENT OF THIS TRACT. THIS SURVEY DOES NOT CONSTITUTE A TITLE SEARCH BY SURVEYOR.

NO TITLE REPORT WAS SUPPLIED OR USED IN THE PREPARATION OF THIS MAP. THERE MAY EXIST EASMENTS, CONDITIONS, OR RESTRICTIONS THAT COULD AFFECT THE TITLE OF THIS PROPERTY. NO ATTEMPT HAS BEEN MADE IN THIS SURVEY TO SHOW SUCH MATTERS THAT MAY AFFECT TITLE.

NOTES:

REFER TO LANDSCAPE AND ARCHITECTURAL PLANS FOR INFORMATION REGARDING SITE ITEMS TO BE SALVAGED.

REFER TO LANDSCAPE PLANS FOR TREE REMOVAL AND TREE PROTECTION PLANS.

REFER TO DEMOLITION ELECTRICAL SITE PLAN FOR INFORMATION ON EXISTING SITE ELECTRICAL REMOVAL.

EXISTING UTILITIES TO PAC TO REMAIN OPERATIONAL. COORDINATE WITH PROJECT MANAGER IF SHUTDOWN IS NECESSARY.

N

0 30 60 120

SCALE: 1" = 60'

BID/PERMIT SET

CONDITIONAL USE NUMBER: CU2018-0016
DESIGN REVIEW NUMBER: DR2018-0114
SITE DEVELOPMENT PERMIT NUMBER: TBD
BUILDING PERMIT NUMBER: TBD

OVERALL EXISTING CONDITIONS AND DEMO PLAN
ACMA
BEAVERTON SCHOOL DISTRICT

C2.0
74-18109-00
03/14/19
REVISIONS

DLR Group
Architecture Planning Interiors

© 2018, DLR Group Architecture & Planning Inc., an Oregon corporation, ALL RIGHTS RESERVED

Harper
Houf **P**eterson
Righellis **I**nc.
ENGINEERS • PLANNERS
LANDSCAPE ARCHITECTS • SURVEYORS
205 SE Spokane Street, Suite 200, Portland, OR 97202
phone: 503.221.1131 www.hhpr.com fax: 503.221.1171

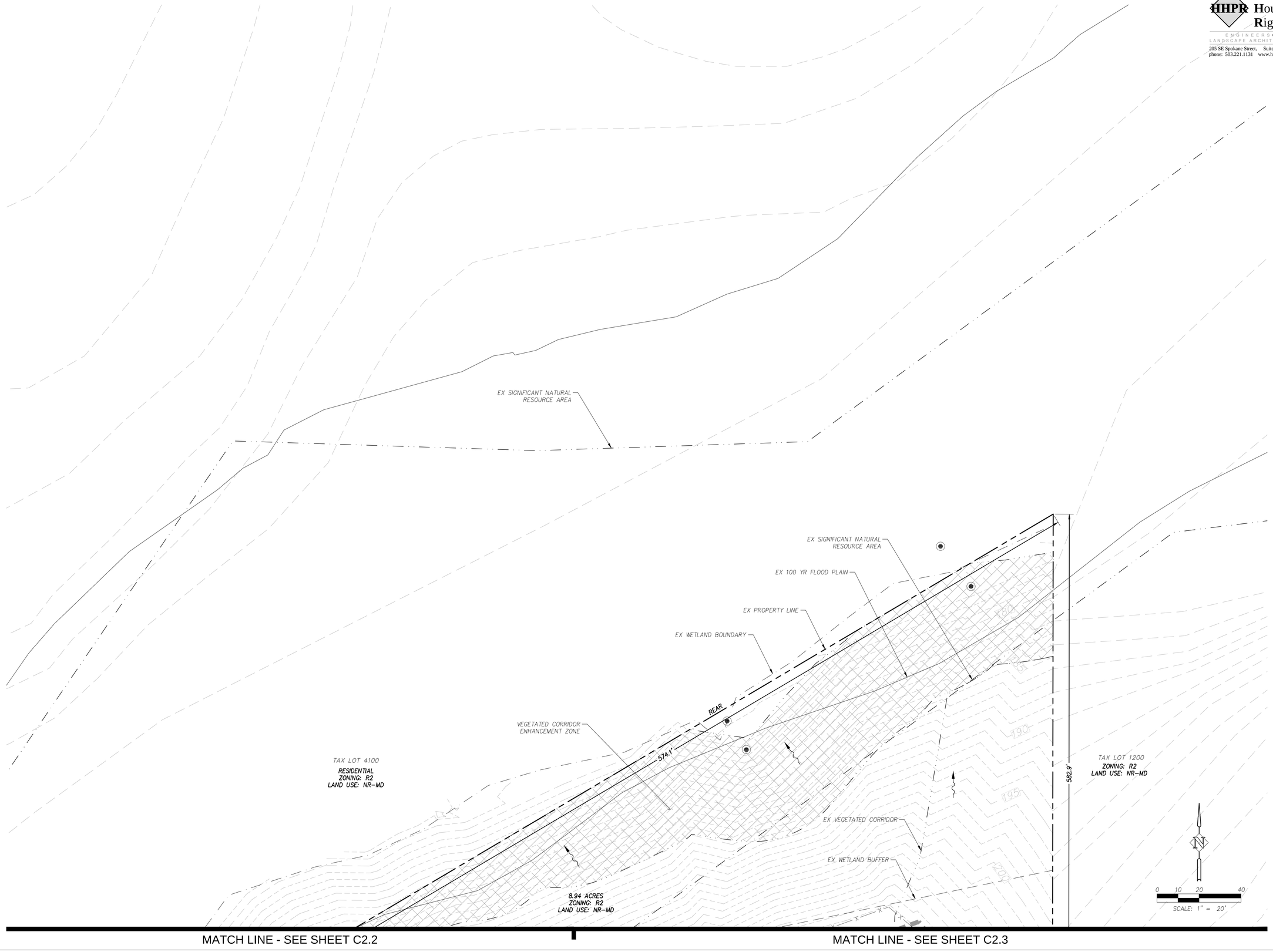

MATCH LINE - SEE SHEET C2.2

MATCH LINE - SEE SHEET C2.3

BID/PERMIT SET

CONDITIONAL USE NUMBER: CU2018-0016
DESIGN REVIEW NUMBER: DR2018-0114
SITE DEVELOPMENT PERMIT NUMBER: TBD
BUILDING PERMIT NUMBER: TBD

EXISTING CONDITIONS AND DEMO PLAN
ACMA
BEAVERTON SCHOOL DISTRICT

C2.1
74-18109-00
03/14/19
REVISIONS

DLR Group
Architecture Planning Interiors

© 2018, DLR Group Architecture & Planning Inc., an Oregon corporation, ALL RIGHTS RESERVED

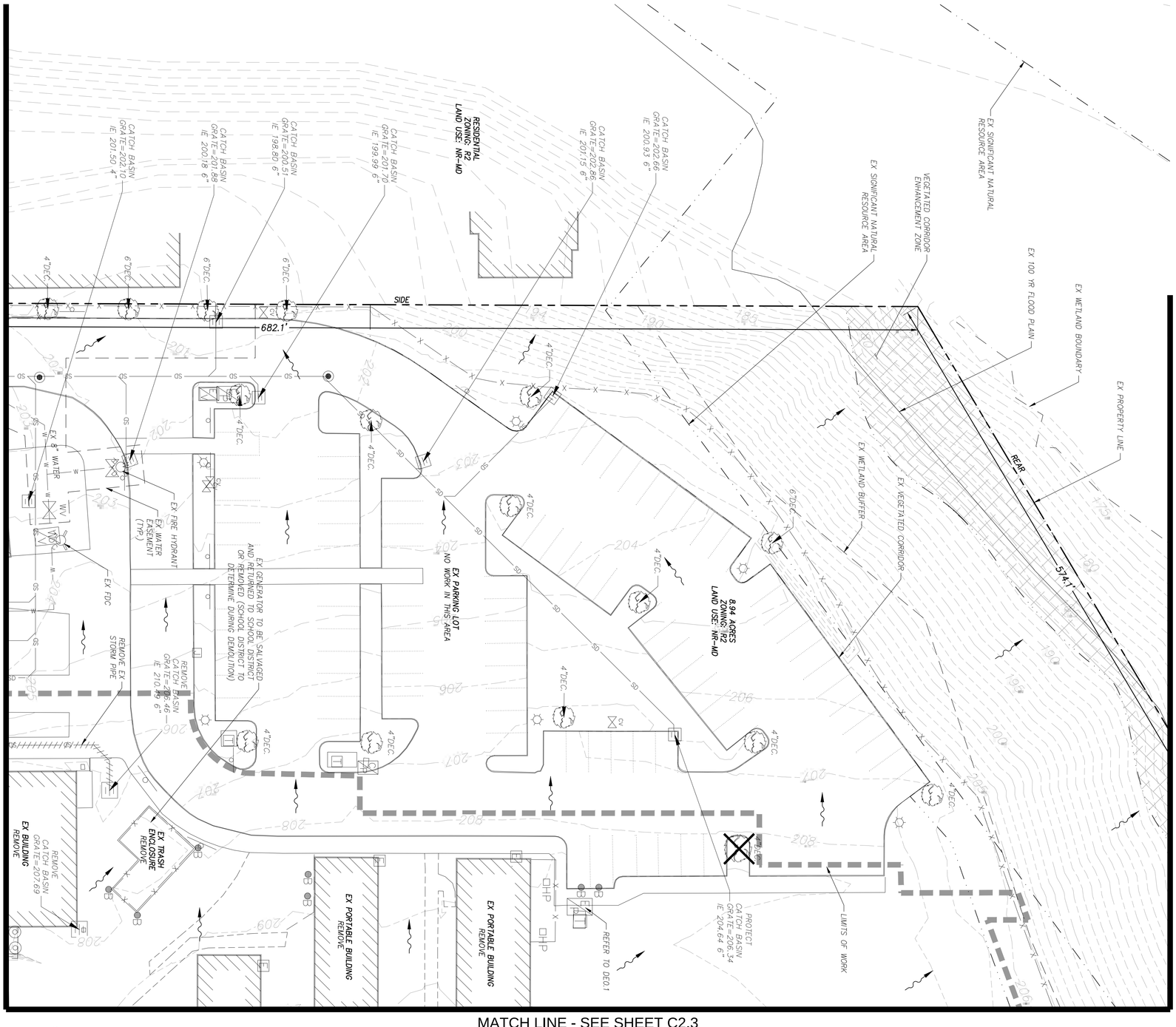

Harper Houf Peterson Righellis Inc.
ENGINEERS | PLANNERS | LANDSCAPE ARCHITECTS | SURVEYORS
205 SE Spokane Street, Suite 200, Portland, OR 97202
phone: 503.221.1131 www.hhpr.com fax: 503.221.1171

DLR Group
Architecture Planning Interiors

C2.2
74-18109-00
03/14/19
REVISIONS

EXISTING CONDITIONS AND DEMO PLAN
ACMA
BEAVERTON SCHOOL DISTRICT

BID/PERMIT SET

CONDITIONAL USE NUMBER: CU2018-0016
DESIGN REVIEW NUMBER: DR2018-0114
SITE DEVELOPMENT PERMIT NUMBER: TBD
BUILDING PERMIT NUMBER: TBD

©2018, DLR Group Architecture & Planning Inc., an Oregon corporation, ALL RIGHTS RESERVED

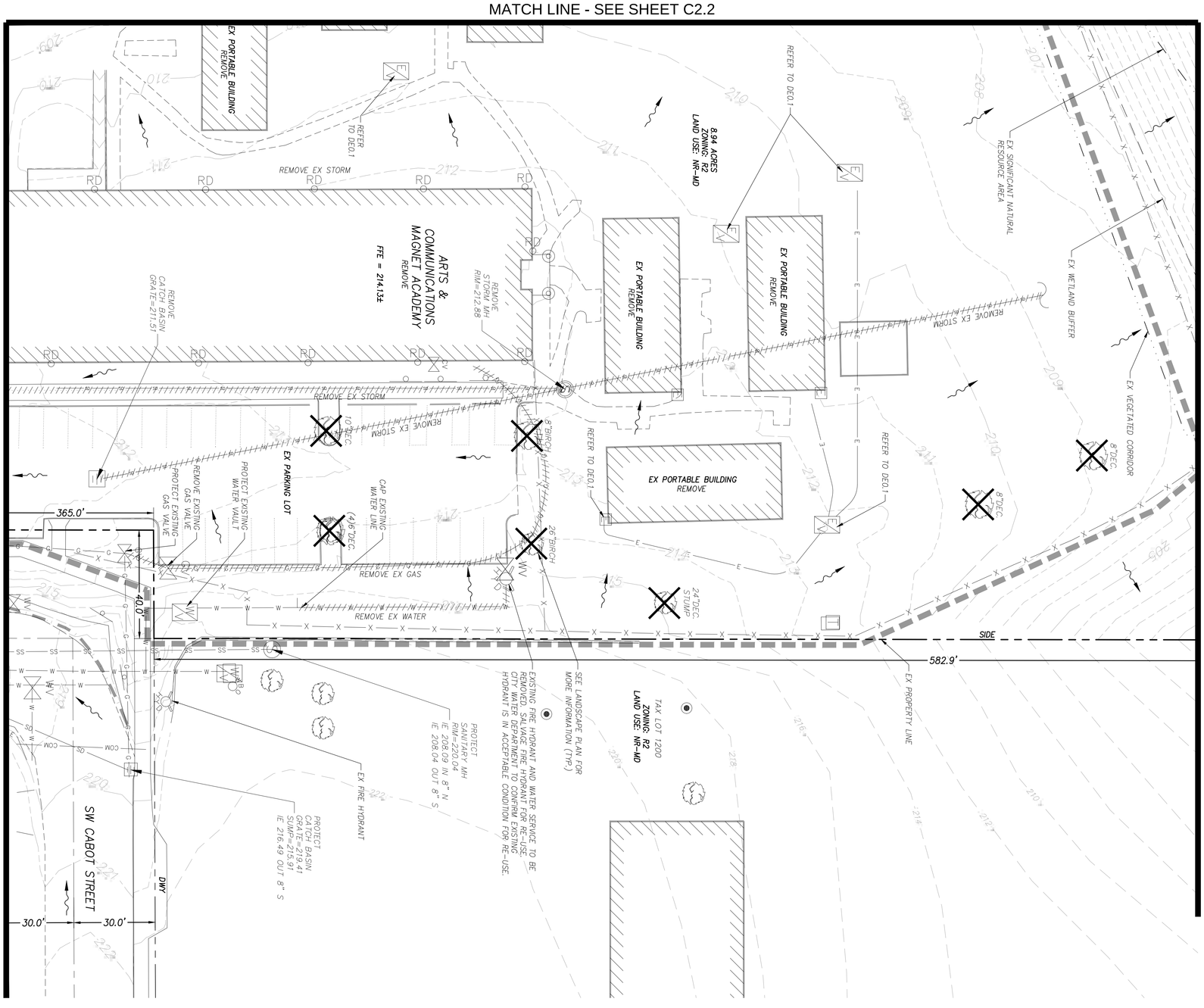

Harper Houf Peterson Righellis Inc.
ENGINEERS | SURVEYORS | PLANNERS | LANDSCAPE ARCHITECTS
205 SE Spokane Street, Suite 200, Portland, OR 97202
phone: 503.221.1131 www.hhpr.com fax: 503.221.1171

DLR Group
Architecture Planning Interiors

©2018, DLR Group Architecture & Planning Inc., an Oregon corporation, ALL RIGHTS RESERVED

C2.3
74-18109-00
03/14/19
REVISIONS

EXISTING CONDITIONS AND DEMO PLAN
ACMA
BEAVERTON SCHOOL DISTRICT

BID/PERMIT SET

CONDITIONAL USE NUMBER: CU2018-0016
DESIGN REVIEW NUMBER: DR2018-0114
SITE DEVELOPMENT PERMIT NUMBER: TBD
BUILDING PERMIT NUMBER: TBD

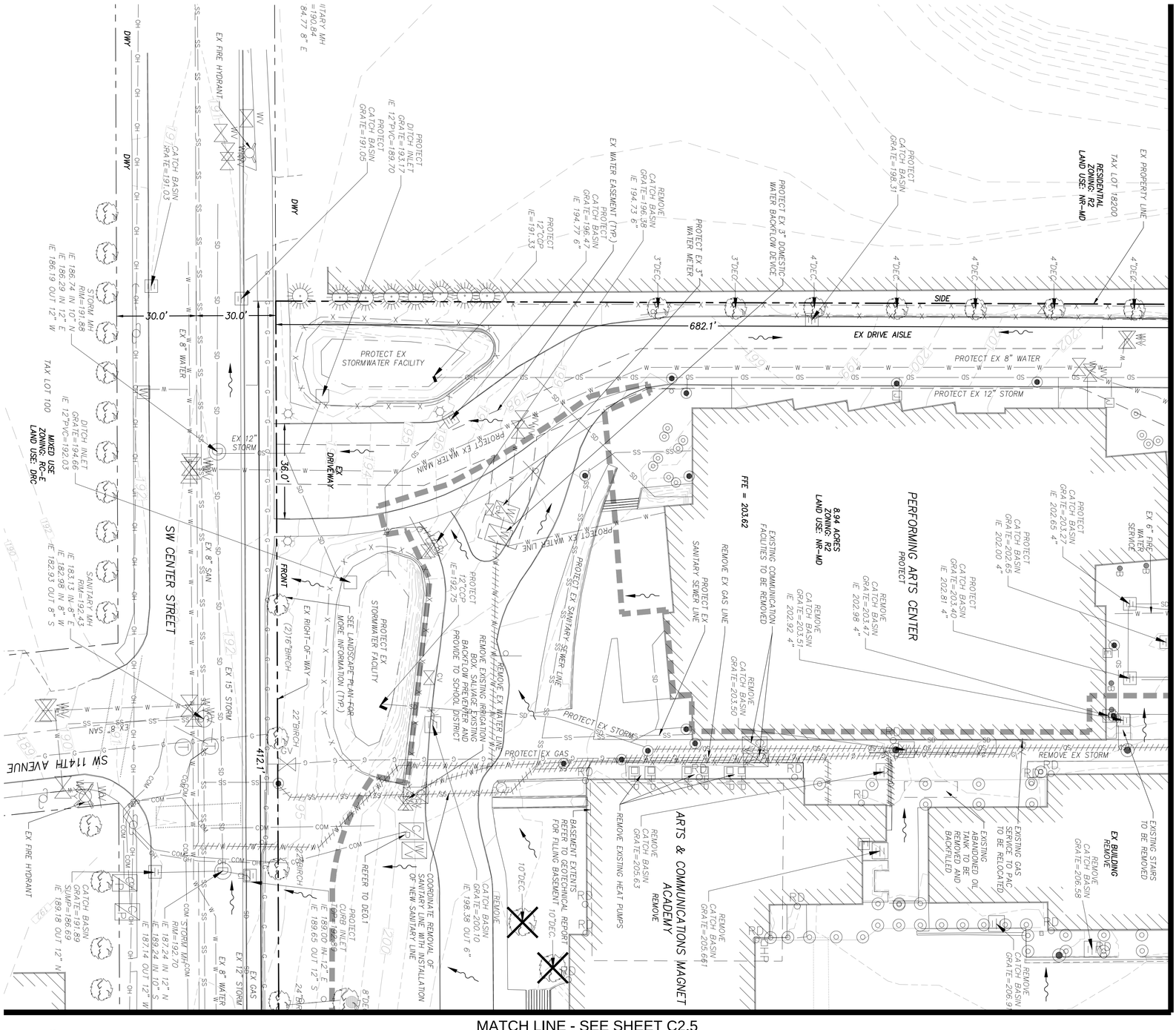

0 10 20 40
SCALE: 1" = 20'

Harper Houf Peterson Righellis Inc.
ENGINEERS | SURVEYORS | PLANNERS | LANDSCAPE ARCHITECTS
205 SE Spokane Street, Suite 200, Portland, OR 97202
phone: 503.221.1131 www.hhpr.com fax: 503.221.1171

DLR Group
Architecture Planning Interiors

©2018, DLR Group Architecture & Planning Inc., an Oregon corporation, ALL RIGHTS RESERVED

C2.4
74-18109-00
03/14/19
REVISIONS

EXISTING CONDITIONS AND DEMO PLAN
ACMA
BEAVERTON SCHOOL DISTRICT

BID/PERMIT SET

CONDITIONAL USE NUMBER: CU2018-0016
DESIGN REVIEW NUMBER: DR2018-0114
SITE DEVELOPMENT PERMIT NUMBER: TBD
BUILDING PERMIT NUMBER: TBD

MATCH LINE - SEE SHEET C2.3

MATCH LINE - SEE SHEET C2.4

EX COURTYARD

REMOVE EX STORM PIPE

8.94 ACRES
ZONING: R2
LAND USE: NR-MD

EX PARKING LOT

FFE = 209.18

ARTS & COMMUNICATIONS MAGNET ACADEMY
REMOVE

REMOVE EX STORM PIPE

12"DEC.

8"DEC.

8"DEC.

9"DEC.

10"DEC.

REMOVE EX STORM PIPE

EX DRIVE AISLE

REMOVE CATCH BASIN GRATE=203.96

EX DRIVEWAY

32.0'

PROTECT TVWD PRESSURE REDUCING STATION

SEE LANDSCAPE PLAN FOR MORE INFORMATION (TYP.)

24"BIRCH

24"BIRCH

FRONT

412.1'

30.0'

30.0'

EX GAS

EX 8" WATER

EX 8" SAN

EX 12" STORM

DWY

MIXED USE
ZONING: RC-E
LAND USE: DRC

TAX LOT 1307

365.0'
SIDE

PROTECT EX GAS MAIN

SW 113TH AVENUE

EX 8" SAN

EX 8" WATER

DWY

40.0'

45.0'

TAX LOT 1301
MIXED USE
ZONING: RC-E
LAND USE: DRC

CATCH BASIN
GRATE=217.25
SUMP=213.75
IE 216.43 IN 8" N
IE 215.27 OUT 12" S

TAX LOT 1302
MIXED USE
ZONING: RC-E
LAND USE: DRC

PROTECT EIXSTING SIGN AND POST

TAX LOT 1300
MIXED USE
ZONING: RC-E
LAND USE: DRC

SANITARY MH
RIM=210.86
IE 202.92 IN 8" N
IE 202.87 OUT 8" S

REMOVE AND DISPOSE SIGN AND POST

REMOVE AND DISPOSE POST. PROVIDE SIGNS TO OWNER.

REMOVE AND DISPOSE SIGN AND POST

14"DEC.

TAX LOT
1303
MIXED USE
ZONING: RC-E
LAND USE: DRC

CATCH BASIN
GRATE=205.68
IE 203.13 IN 12" S
IE 203.46 IN 12" N

14"DEC.

12"CMP
IE=196.41

CATCH BASIN
GRATE=195.96
IE 194.08 OUT 12" W

EX FIRE HYDRANT

SANITARY MH
RIM=196.22
IE 184.53 IN 8" N
IE 184.53 IN 8" E
IE 184.43 OUT 8" W

20"BIRCH

49.7'

0 10 20 40
SCALE: 1" = 20'

HHPR Harper Houf Peterson Righellis Inc.
ENGINEERS • PLANNERS
LANDSCAPE ARCHITECTS • SURVEYORS
205 SE Spokane Street, Suite 200, Portland, OR 97202
phone: 503.221.1131 www.hhpr.com fax: 503.221.1171

BID/PERMIT SET

CONDITIONAL USE NUMBER: CU2018-0016
DESIGN REVIEW NUMBER: DR2018-0114
SITE DEVELOPMENT PERMIT NUMBER: TBD
BUILDING PERMIT NUMBER: TBD

EXISTING CONDITIONS AND DEMO PLAN
ACMA
BEAVERTON SCHOOL DISTRICT

C2.5
74-18109-00
03/14/19
REVISIONS

DLR Group
Architecture Planning Interiors

© 2019, DLR Group Architecture & Planning Inc., an Oregon corporation. ALL RIGHTS RESERVED

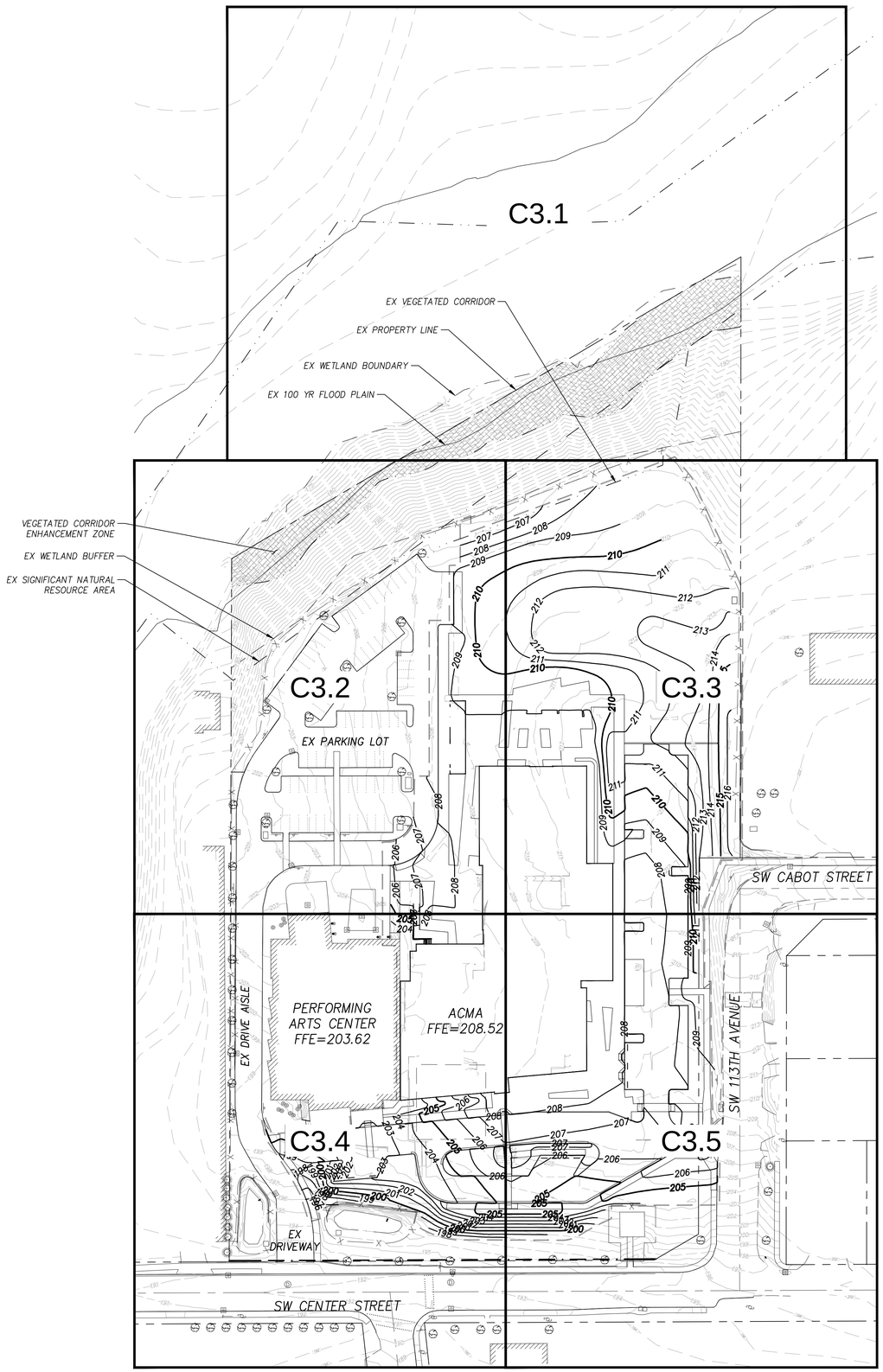

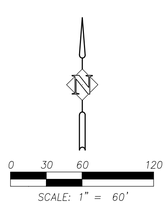

PROPOSED LEGEND:

240 CONTOUR – 5'

239 CONTOUR – 1'

LIMITS OF GRADING

EXISTING STRUCTURES WITHIN WORK AREA TO BE REMOVED UNDER SEPARATE PERMIT PRIOR TO MASS GRADING. SEE SHEET C2.0 THRU C2.5 FOR DEMOLITION PLAN.

SITE AREA = 8.94 ACRES

TOTAL MASS GRADING DISTURBED AREA = 5.08 ACRES

CONTOURS SHOWN ARE FINISH GRADE.

SEE ARCHITECTURAL PLANS FOR BUILDING SLAB DETAILS.

SEE LANDSCAPE PLANS FOR CONCRETE SECTIONS AND TOPSOIL SECTIONS.

SEE LANDSCAPE SHEETS FOR DETAILED GRADING INFORMATION.

SEE LANDSCAPE SHEETS FOR TREE PROTECTION PLAN.

SEE UTILITY SHEETS FOR LOCATIONS OF WATER QUALITY AND DETENTION FACILITIES.

SEE EC1.0–EC5.0 FOR EROSION CONTROL INFORMATION.

HHPR Harper Houf Peterson Righellis Inc.
ENGINEERS•PLANNERS
LANDSCAPE ARCHITECTS • SURVEYORS
205 SE Spokane Street, Suite 200, Portland, OR 97202
phone: 503.221.1131 www.hhpr.com fax: 503.221.1171

BID/PERMIT SET

CONDITIONAL USE NUMBER: CU2018-0016
DESIGN REVIEW NUMBER: DR2018-0114
SITE DEVELOPMENT PERMIT NUMBER: TBD
BUILDING PERMIT NUMBER: TBD

REGISTERED PROFESSIONAL ENGINEER 59,971 OREGON JANUARY 11, 2005 JANELLE LYNN BRANNAN

EXPIRES: 12/31/2019

OVERALL MASS GRADING PLAN
ACMA
BEAVERTON SCHOOL DISTRICT

C3.0
74-18109-90
03/14/19
REVISIONS

DLR Group
Architecture Planning Interiors

© 2018, DLR Group Architecture & Planning Inc., an Oregon corporation, ALL RIGHTS RESERVED

Harper
Houf **P**eterson
Righellis **I**nc.
ENGINEERS•PLANNERS
LANDSCAPE ARCHITECTS • SURVEYORS
205 SE Spokane Street, Suite 200, Portland, OR 97202
phone: 503.221.1131 www.hhpr.com fax: 503.221.1171

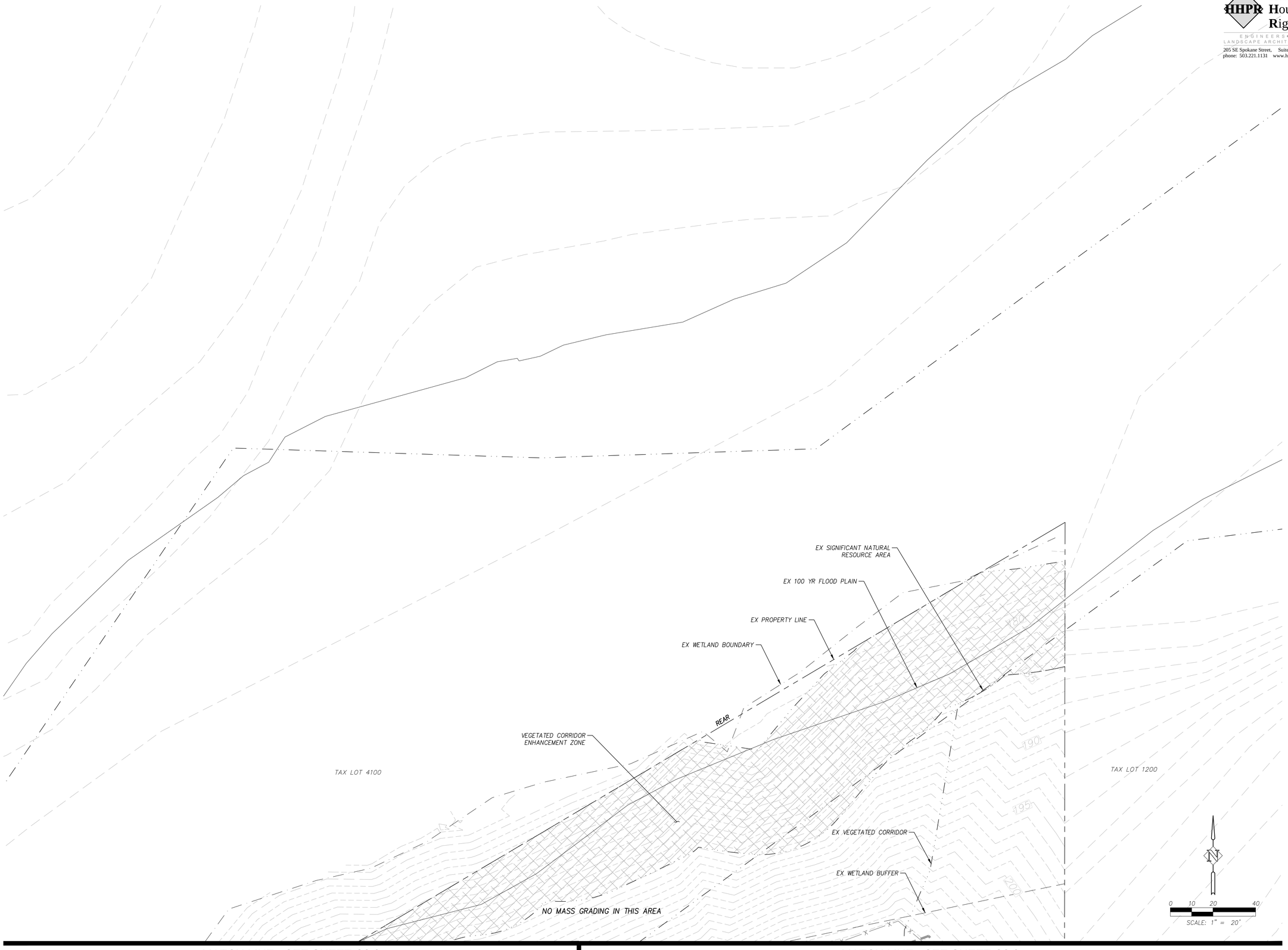

MATCH LINE - SEE SHEET C3.2

MATCH LINE - SEE SHEET C3.3

BID/PERMIT SET

CONDITIONAL USE NUMBER: CU2018-0016
DESIGN REVIEW NUMBER: DR2018-0114
SITE DEVELOPMENT PERMIT NUMBER: TBD
BUILDING PERMIT NUMBER: TBD

REGISTERED PROFESSIONAL ENGINEER
59,971
OREGON
JUNE 11, 2005
JANELLE LYNN BRANNAN

EXPIRES: 12/31/2019

MASS GRADING PLAN
ACMA
BEAVERTON SCHOOL DISTRICT

C3.1
74-1B109-00
03/14/19
REVISIONS

DLR Group
Architecture Planning Interiors

© 2018, DLR Group Architecture & Planning Inc., an Oregon corporation, ALL RIGHTS RESERVED

MATCH LINE - SEE SHEET C3.1

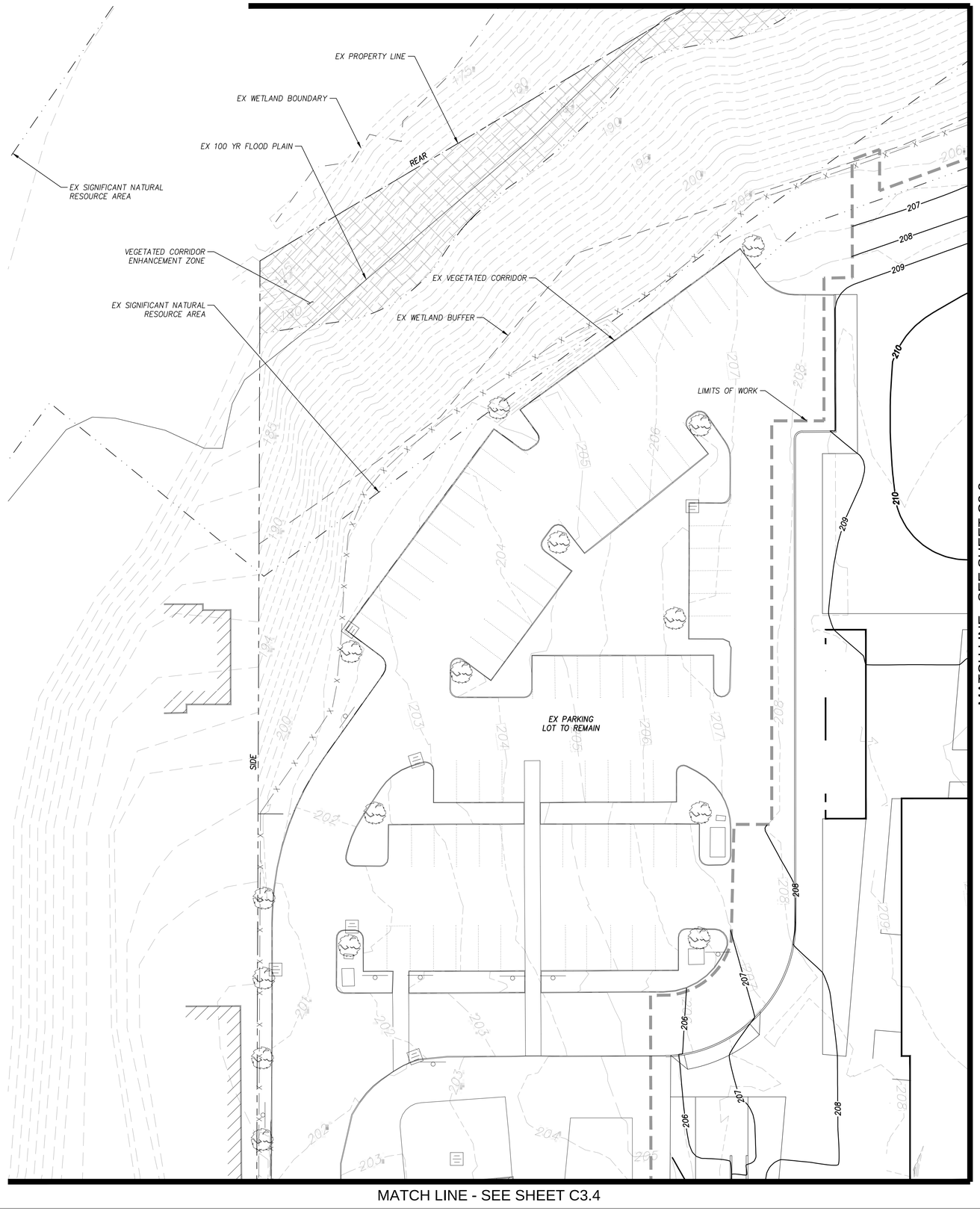

MATCH LINE - SEE SHEET C3.3

MATCH LINE - SEE SHEET C3.4

0 10 20 40

SCALE: 1" = 20'

Harper
Houf **P**eterson
Righellis **I**nc.
ENGINEERS•PLANNERS
LANDSCAPE ARCHITECTS • SURVEYORS
205 SE Spokane Street, Suite 200, Portland, OR 97202
phone: 503.221.1131 www.hhpr.com fax: 503.221.1171

BID/PERMIT SET

CONDITIONAL USE NUMBER: CU2018-0016
DESIGN REVIEW NUMBER: DR2018-0114
SITE DEVELOPMENT PERMIT NUMBER: TBD
BUILDING PERMIT NUMBER: TBD

REGISTERED PROFESSIONAL ENGINEER
59,971
OREGON
JUNE 11, 2005
JANELLE LYNN BRANNAN

EXPIRES: 12/31/2019

MASS GRADING PLAN
ACMA
BEAVERTON SCHOOL DISTRICT

C3.2
74-18109-00
03/14/19
REVISIONS

DLR Group
Architecture Planning Interiors

© 2019, DLR Group Architecture & Planning Inc., an Oregon corporation. ALL RIGHTS RESERVED

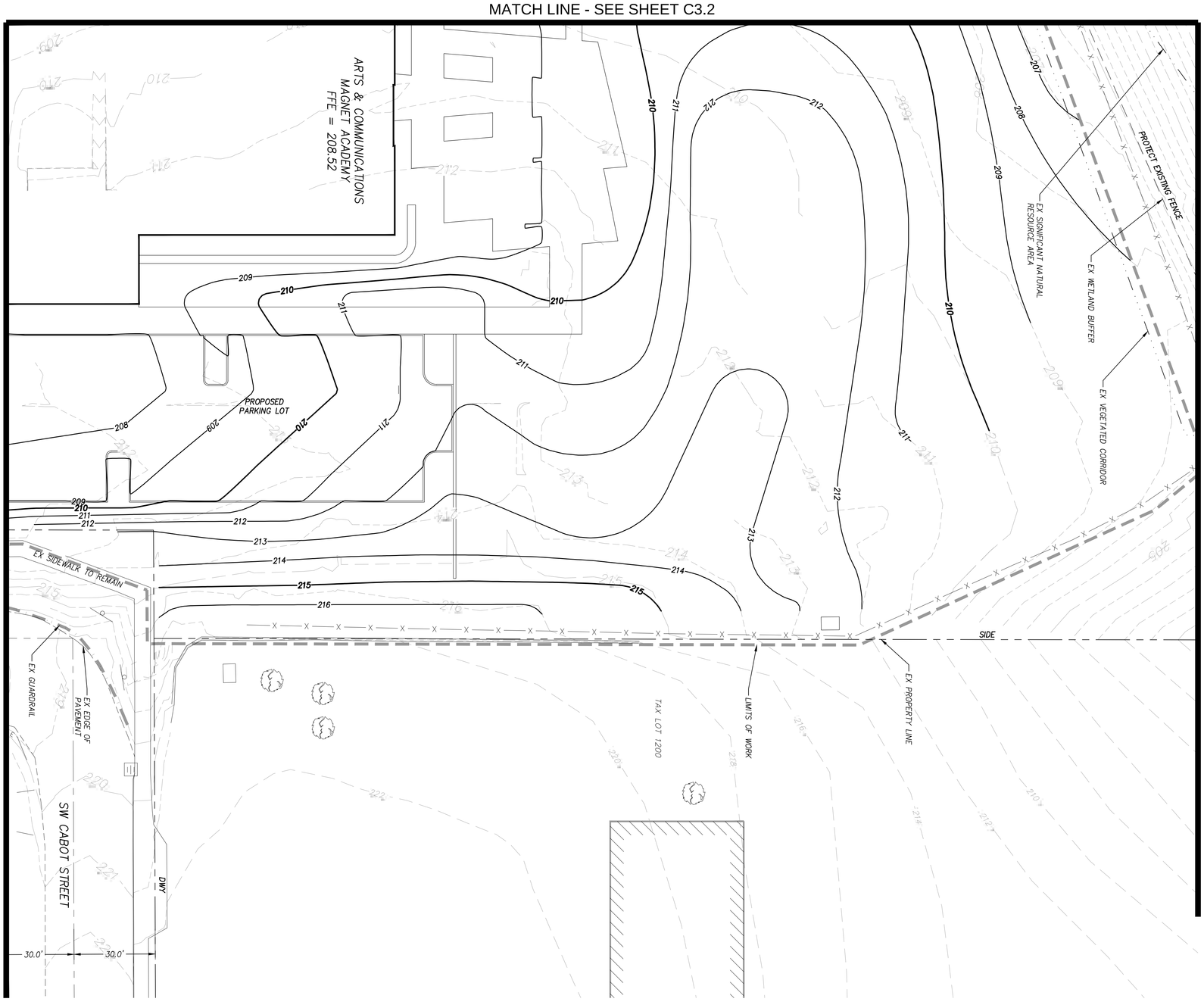

Harper Houf Peterson Righellis Inc.
ENGINEERS | SURVEYORS | PLANNERS | LANDSCAPE ARCHITECTS
205 SE Spokane Street, Suite 200, Portland, OR 97202
phone: 503.221.1131 www.hhpr.com fax: 503.221.1171

DLR Group
Architecture Planning Interiors

© 2018, DLR Group Architecture & Planning inc., an Oregon corporation, ALL RIGHTS RESERVED

C3.3
74-18109-00
03/14/19
REVISIONS

MASS GRADING PLAN
ACMA
BEAVERTON SCHOOL DISTRICT

REGISTERED PROFESSIONAL ENGINEER
OREGON
JULY 11, 2008
JANELLE LYNN BRANNAN
EXPIRES: 12/31/2019

BID/PERMIT SET

CONDITIONAL USE NUMBER: CU2018-0016
DESIGN REVIEW NUMBER: DR2018-0114
SITE DEVELOPMENT PERMIT NUMBER: TBD
BUILDING PERMIT NUMBER: TBD

MATCH LINE - SEE SHEET C3.2

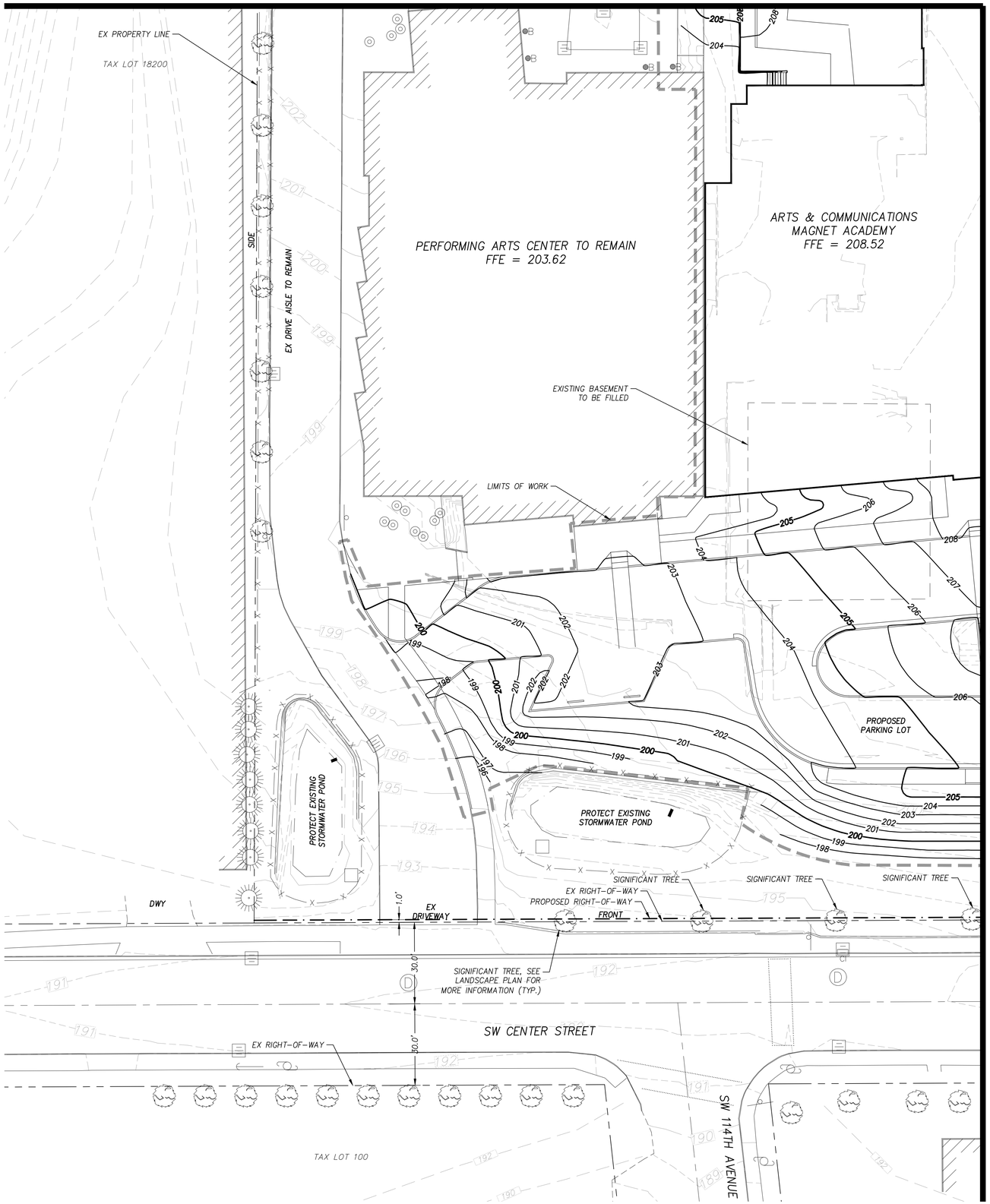

MATCH LINE - SEE SHEET C3.5

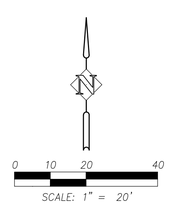

HHPR Harper Houf Peterson Righellis Inc.
ENGINEERS•PLANNERS
LANDSCAPE ARCHITECTS • SURVEYORS
205 SE Spokane Street, Suite 200, Portland, OR 97202
phone: 503.221.1131 www.hhpr.com fax: 503.221.1171

BID/PERMIT SET

CONDITIONAL USE NUMBER: CU2018-0016
DESIGN REVIEW NUMBER: DR2018-0114
SITE DEVELOPMENT PERMIT NUMBER: TBD
BUILDING PERMIT NUMBER: TBD

REGISTERED PROFESSIONAL ENGINEER
59,971
OREGON
JUNE 11, 2005
JANELLE LYNN BRAINMAN

EXPIRES: 12/31/2019

MASS GRADING PLAN
ACMA
BEAVERTON SCHOOL DISTRICT

C3.4
74-18109-00
03/14/19
REVISIONS

DLR Group
Architecture Planning Interiors

© 2018, DLR Group Architecture & Planning Inc., an Oregon corporation, ALL RIGHTS RESERVED

MATCH LINE - SEE SHEET C3.3

MATCH LINE - SEE SHEET C3.4

ARTS & COMMUNICATIONS
MAGNET ACADEMY
FFE = 208.52

PROPOSED PARKING LOT

SIDE

40.0'

45.0'

SW 113TH AVENUE

TAX LOT 1301

TAX LOT 1302

TAX LOT 1300

TAX LOT 1303

TAX LOT 1307

DWY

SEE DRIVEWAY GRADING DETAIL ON THIS SHEET

CONSTRUCT SIDEWALK PER CITY OF BEAVERTON STANDARD DETAIL 215

PROPOSED DRIVEWAY

CONSTRUCT DRIVEWAY PER CITY OF BEAVERTON STANDARD DETAIL 210

PROPOSED PARKING LOT

LIMITS OF WORK

CONSTRUCT SIDEWALK PER CITY OF BEAVERTON STANDARD DETAIL 216 AND CURB AND GUTTER PER CITY OF BEAVERTON STANDARD DETAIL 205

PROTECT EX TVWD PRESSURE REDUCING STATION

SIGNIFICANT TREE

SIGNIFICANT TREE, SEE LANDSCAPE PLAN FOR MORE INFORMATION (TYP.)

FRONT

1.0'

30.0'

30.0'

EX RIGHT-OF-WAY

PROPOSED RIGHT-OF-WAY

0 10 20 40

SCALE: 1" = 20'

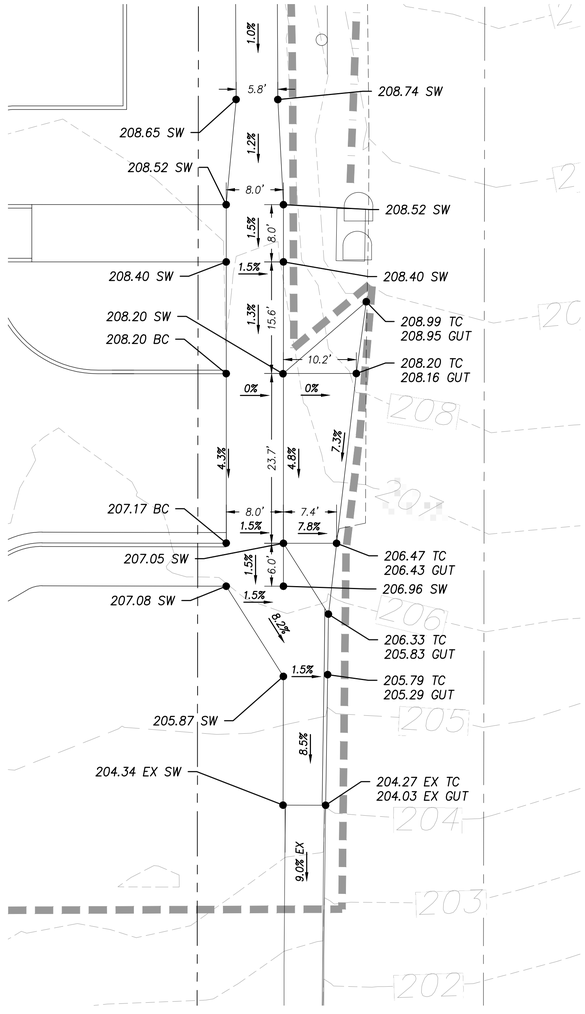

DRIVEWAY GRADING DETAIL

HHPR Harper Houf Peterson Righellis Inc.
ENGINEERS • PLANNERS
LANDSCAPE ARCHITECTS • SURVEYORS
205 SE Spokane Street, Suite 200, Portland, OR 97202
phone: 503.221.1131 www.hhpr.com fax: 503.221.1171

BID/PERMIT SET

CONDITIONAL USE NUMBER: CU2018-0016
DESIGN REVIEW NUMBER: DR2018-0114
SITE DEVELOPMENT PERMIT NUMBER: TBD
BUILDING PERMIT NUMBER: TBD

REGISTERED PROFESSIONAL ENGINEER
59,971
OREGON
JUNE 11, 2005
JANELLE LYNN BRAWNAN
EXPIRES: 12/31/2019

MASS GRADING PLAN
ACMA
BEAVERTON SCHOOL DISTRICT

C3.5
74-18109-00
03/14/19
REVISIONS

DLR Group
Architecture Planning Interiors

© 2019, DLR Group Architecture & Planning Inc., an Oregon corporation, ALL RIGHTS RESERVED

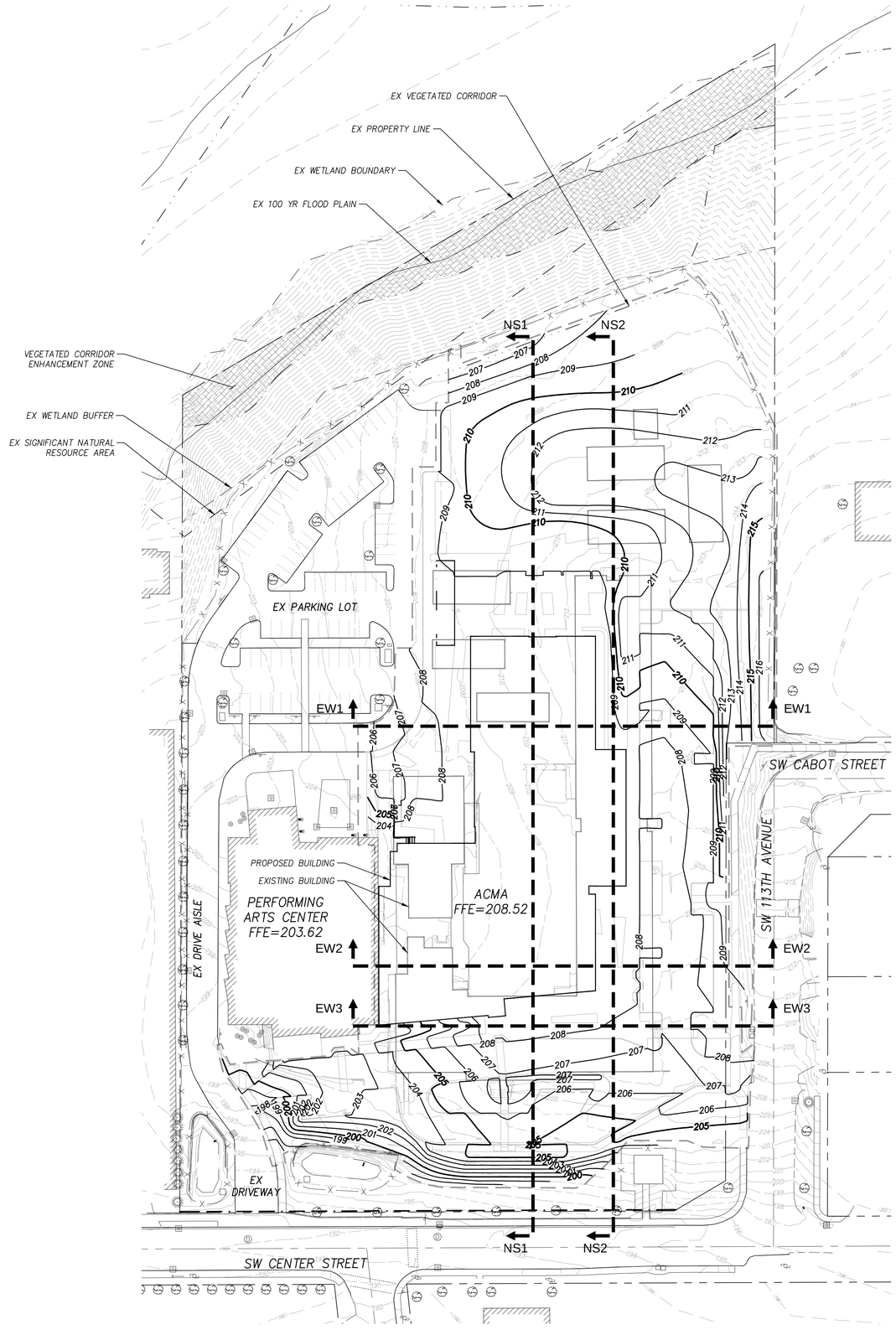

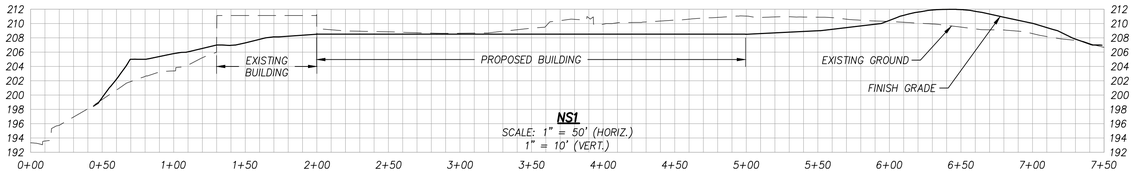

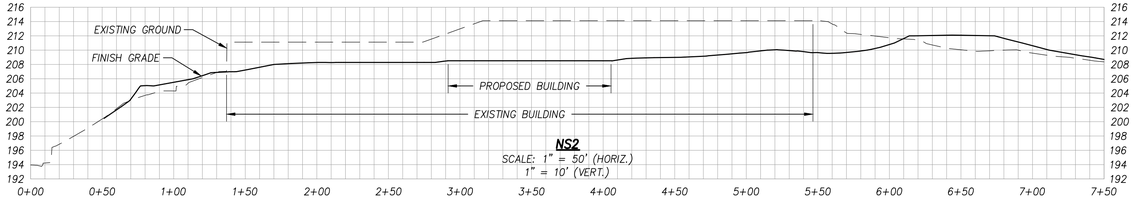

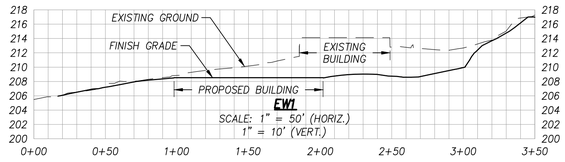

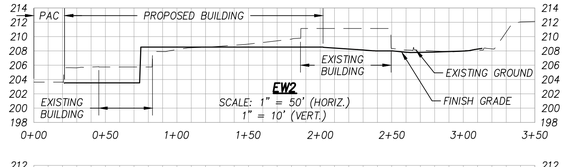

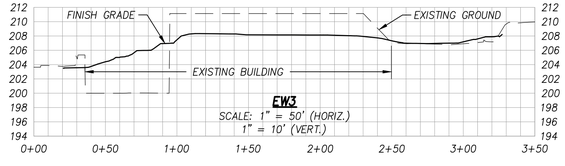

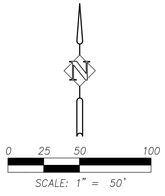

Harper
Houf **P**eterson
Righellis **I**nc.
ENGINEERS•PLANNERS
LANDSCAPE ARCHITECTS • SURVEYORS
205 SE Spokane Street, Suite 200, Portland, OR 97202
phone: 503.221.1131 www.hhpr.com fax: 503.221.1171

BID/PERMIT SET

CONDITIONAL USE NUMBER: CU2018-0016
DESIGN REVIEW NUMBER: DR2018-0114
SITE DEVELOPMENT PERMIT NUMBER: TBD
BUILDING PERMIT NUMBER: TBD

REGISTERED PROFESSIONAL ENGINEER 59,971 OREGON JUNE 11, 2005 JANELLE LYNN BRANNAN

EXPIRES: 12/31/2019

SITE GRADING SECTIONS
ACMA
BEAVERTON SCHOOL DISTRICT

C3.6
74-18105-00
03/14/19
REVISIONS

DLR Group
Architecture Planning Interiors

© 2018, DLR Group Architecture & Planning Inc., an Oregon corporation. ALL RIGHTS RESERVED

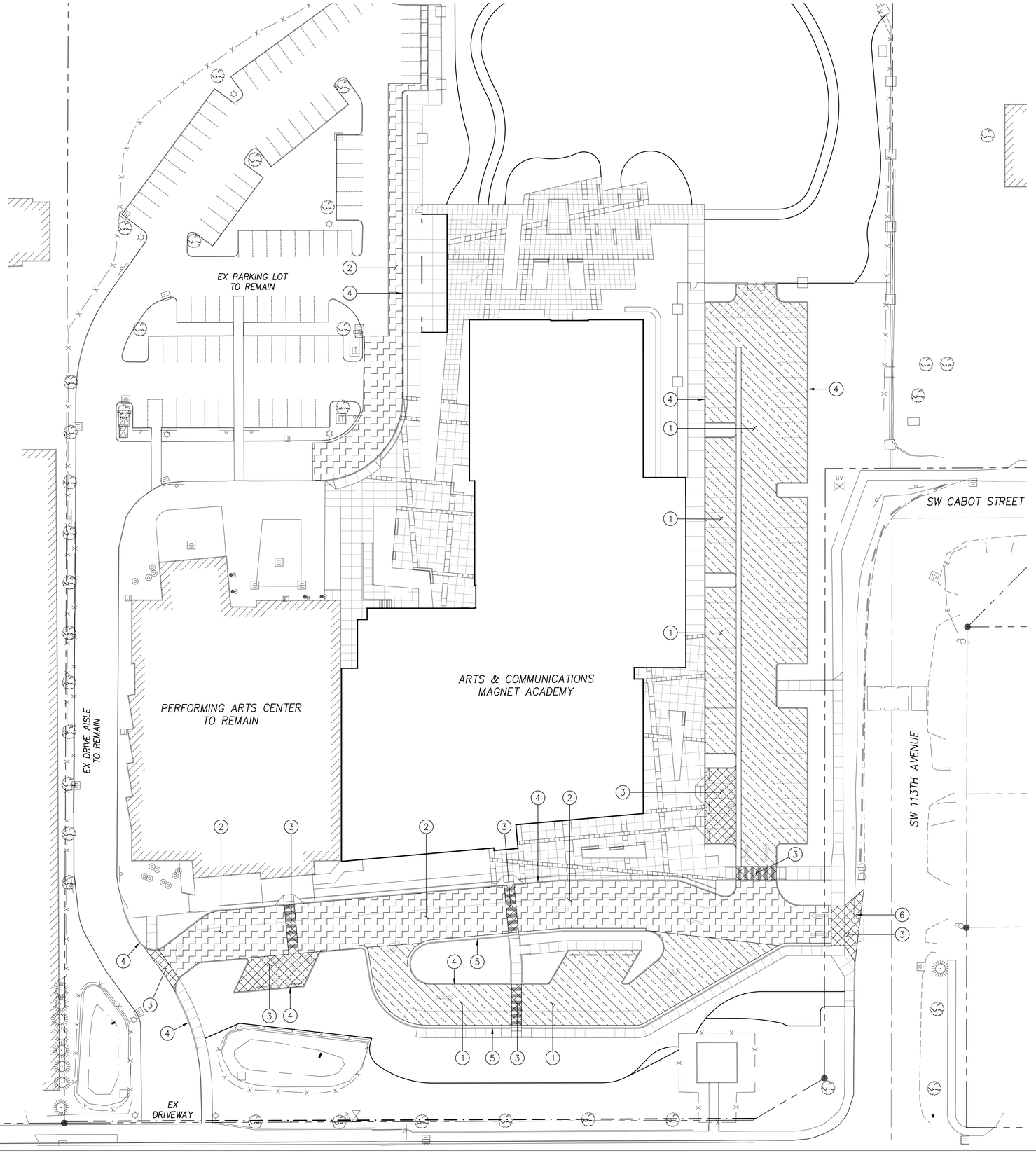

LEGEND

- PARKING LOT ASPHALT PAVEMENT
- HEAVY VEHICLE ASPHALT PAVEMENT
- VEHICLE CONCRETE

SEE LANDSCAPE ARCHITECT PLANS FOR DETAILED GRADING, CURB DETAILS, VALLEY GUTTER DETAILS, AND DIMENSIONS.

SEE LANDSCAPE ARCHITECT PLANS FOR CONCRETE SIDEWALK SECTIONS.

CONSTRUCTION NOTES

1. CONSTRUCT ASPHALT PAVEMENT PARKING LOT. SEE SECTION DETAIL THIS SHEET.
2. CONSTRUCT HEAVY VEHICLE ASPHALT PAVEMENT SECTION.SEE SECTION DETAIL THIS SHEET.
3. CONSTRUCT VEHICLE CONCRETE SECTION. SEE SECTION DETAIL THIS SHEET.
4. STANDARD CURB
5. CURB AND GUTTER
6. RECONSTRUCT DRIVEWAY

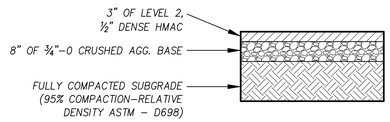

PARKING LOT ASPHALT SECTION
NTS

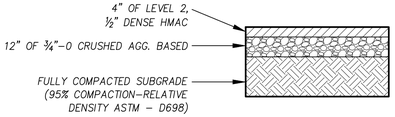

HEAVY VEHICLE ASPHALT SECTION
NTS

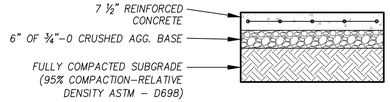

VEHICLE CONCRETE SECTION
NTS

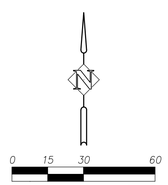

Harper
Houf **P**eterson
Righellis **I**nc.
ENGINEERS•PLANNERS
LANDSCAPE ARCHITECTS • SURVEYORS
205 SE Spokane Street, Suite 200, Portland, OR 97202
phone: 503.221.1131 www.hhpr.com fax: 503.221.1171

BID/PERMIT SET

CONDITIONAL USE NUMBER: CU2018-0016
DESIGN REVIEW NUMBER: DR2018-0114
SITE DEVELOPMENT PERMIT NUMBER: TBD
BUILDING PERMIT NUMBER: TBD

REGISTERED PROFESSIONAL ENGINEER
59,971
OREGON
JUNE 11, 2005
JANELLE LYNN BRANNAN

EXPIRES: 12/31/2019

PAVING PLAN
ACMA
BEAVERTON SCHOOL DISTRICT

C4.0
74-18109-00
03/14/19
REVISIONS

DLR Group
Architecture Planning Interiors

© 2018, DLR Group Architecture & Planning Inc., an Oregon corporation. ALL RIGHTS RESERVED

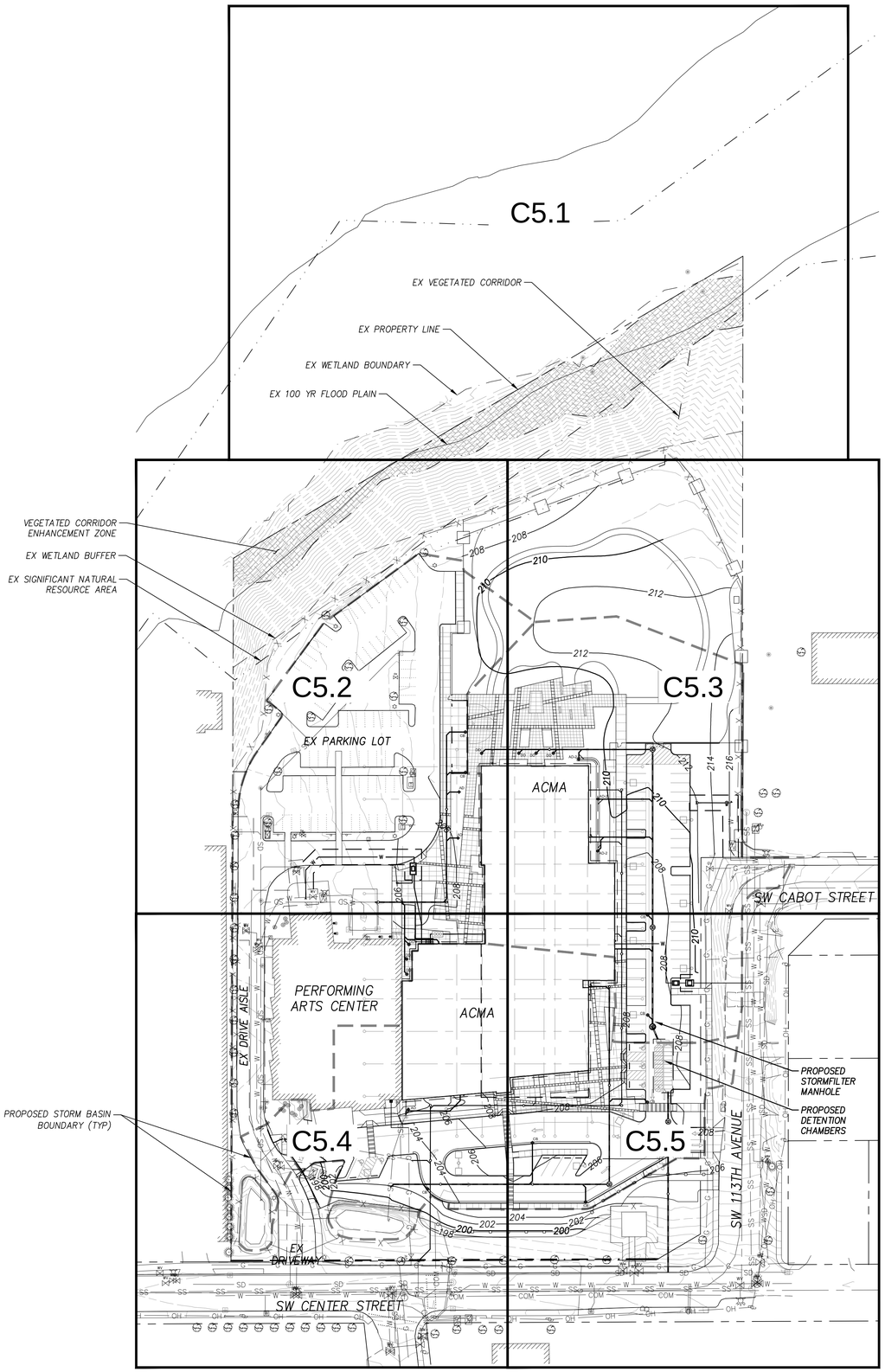

EXISTING LEGEND

- POWER POLE
- GUY WIRE
- BOLLARD
- CATCH BASIN
- CURB INLET
- DITCH INLET
- CLEANOUT
- JUNCTION BOX
- STREET LIGHT
- MAILBOX
- STORM MANHOLE
- SIGN
- SANITARY MANHOLE
- WATER VALVE
- ELECTRICAL VAULT
- ELECTRICAL PEDESTAL
- ELECTRICAL METER
- TRANSFORMER
- RAIN DRAIN
- SIGN
- DECIDUOUS TREE
- EVERGREEN TREE
- ELECTRICAL METER
- TELEPHONE MANHOLE
- HEAT PUMP
- TELEPHONE PEDESTAL
- TELEPHONE VAULT
- WATER MANHOLE
- WATER VAULT
- IRRIGATION CONTROL VALVE
- FIRE HYDRANT
- WATER BLOWOFF
- OVERHANG POST SUPPORT
- GAS VALVE
- JUNCTION BOX
- EDGE OF PAVEMENT
- FENCELINE
- 5 FOOT INTERVAL CONTOUR
- 1 FOOT INTERVAL CONTOUR
- EDGE OF WATER
- PAINT STRIPING
- OVERHEAD POWER
- STORM SEWER
- SANITARY SEWER
- WATER LINE
- GAS LINE
- ELECTRICAL LINE
- COMMUNICATIONS LINE

PROPOSED LEGEND

- CONCRETE
- ASPHALT CONCRETE
- LANDSCAPING
- SWALE
- RIGHT-OF-WAY
- UTILITY EASEMENT
- SAWCUT
- CURB AND GUTTER
- STORM SEWER LINE
- PERFORATED STORM PIPE
- SANITARY SEWER LINE
- WATER LINE
- GAS LINE
- TELECOM LINE
- SANITARY SEWER MANHOLE
- CLEANOUT
- STORM SEWER MANHOLE
- CATCH BASIN / DITCH INLET
- BEEHIVE INLET
- WATER VALVE
- FIRE HYDRANT
- FIRE DEPT. CONNECTION
- WATER METER
- WATER VAULT
- ELECTRICAL VAULT
- TELECOM VAULT
- MAILBOX

SEE LANDSCAPE SHEETS FOR TREE PROTECTION PLAN.

SEE MASS GRADING SHEETS FOR FINISH GRADE CONTOURS.

0 30 60 120

SCALE: 1" = 60'

Harper
Houf **P**eterson
Righellis **I**nc.
ENGINEERS•PLANNERS
LANDSCAPE ARCHITECTS • SURVEYORS
205 SE Spokane Street, Suite 200, Portland, OR 97202
phone: 503.221.1131 www.hhpr.com fax: 503.221.1171

BID/PERMIT SET

CONDITIONAL USE NUMBER: CU2018-0016
DESIGN REVIEW NUMBER: DR2018-0114
SITE DEVELOPMENT PERMIT NUMBER: TBD
BUILDING PERMIT NUMBER: TBD

REGISTERED PROFESSIONAL ENGINEER
59,971
OREGON
JUN. 11, 2005
JANELLE LYNN BRANNAN
EXPIRES: 12/31/2019

OVERALL UTILITY PLAN
ACMA
BEAVERTON SCHOOL DISTRICT

C5.0
74-18109-00
03/14/19
REVISIONS

DLR Group
Architecture Planning Interiors

© 2018, DLR Group Architecture & Planning Inc., an Oregon corporation, ALL RIGHTS RESERVED

Harper
Houf **P**eterson
Righellis **I**nc.
ENGINEERS•PLANNERS
LANDSCAPE ARCHITECTS • SURVEYORS
205 SE Spokane Street, Suite 200, Portland, OR 97202
phone: 503.221.1131 www.hhpr.com fax: 503.221.1171

BID/PERMIT SET

CONDITIONAL USE NUMBER: CU2018-0016
DESIGN REVIEW NUMBER: DR2018-0114
SITE DEVELOPMENT PERMIT NUMBER: TBD
BUILDING PERMIT NUMBER: TBD

REGISTERED PROFESSIONAL ENGINEER
59,971
OREGON
JUNE 11, 2005
JANELLE LYNN BRANNAN
EXPIRES: 12/31/2019

BEAVERTON SCHOOL DISTRICT
ACMA
UTILITY PLAN

C5.1
74-18109-00
03/14/19
REVISIONS

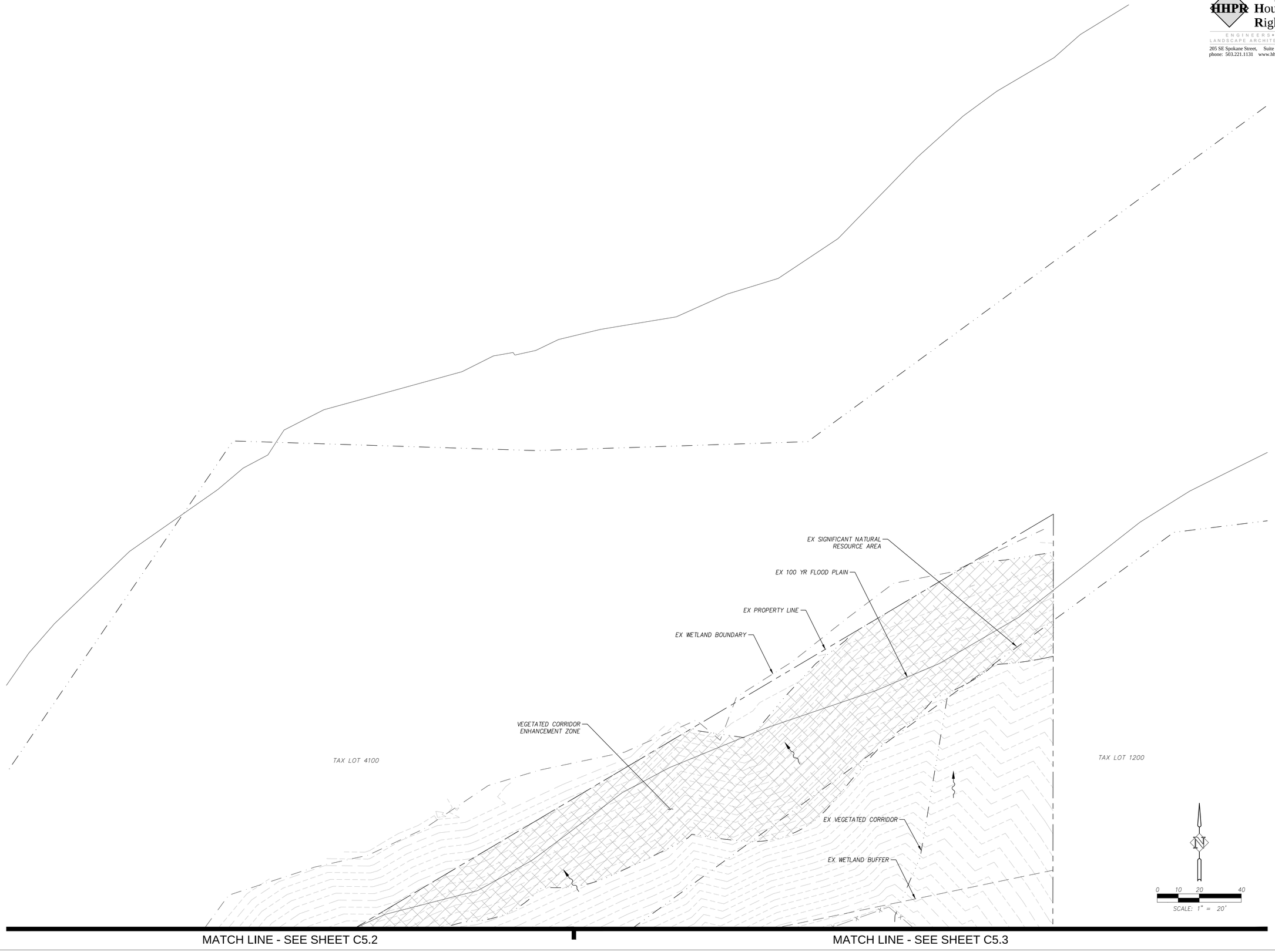

DLR Group
Architecture Planning Interiors

© 2018. DLR Group Architecture & Planning inc., an Oregon corporation. ALL RIGHTS RESERVED

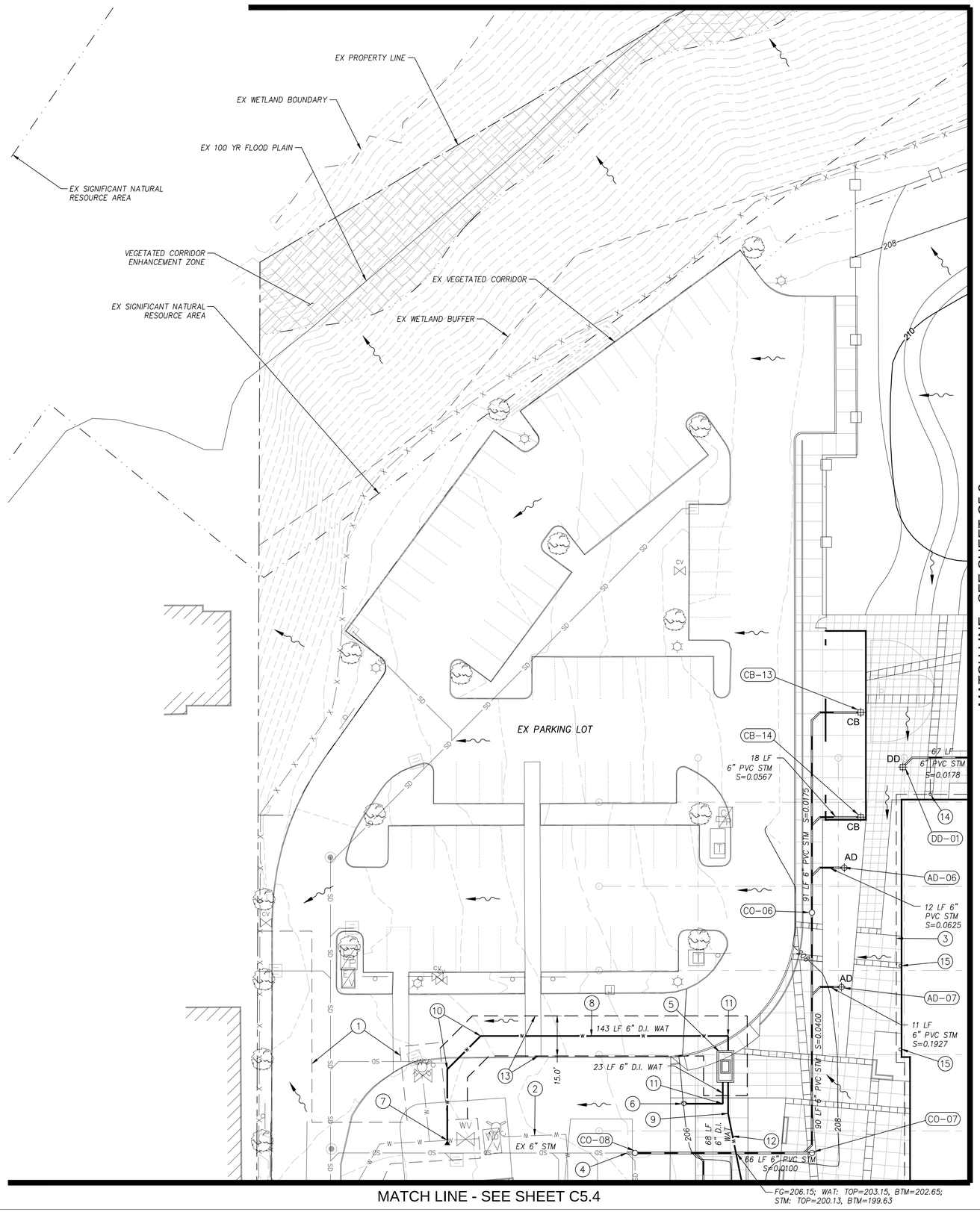

STORM CONSTRUCTION NOTES

CO-06 — PRIVATE CLEANOUT PER CITY OF BEAVERTON STANDARD DETAIL 340
RIM: 208.50
6" IE: 203.51

CO-07 — PRIVATE CLEANOUT PER CITY OF BEAVERTON STANDARD DETAIL 340
RIM: 207.84
6" IE: 199.91

CO-08 — PRIVATE CLEANOUT PER CITY OF BEAVERTON STANDARD DETAIL 340
RIM: 205.10
6" IE: 199.25± (MATCH EXISTING STORM INVERT)

DD-01 — STEEL CATCH BASIN PER DETAIL ON SHEET C5.10 WITH IRONSMITH VERTIGO 12" DRAIN GRATE PER DETAIL ON SHEET C5.9
RIM: 208.32
6" IE OUT (NE): 204.82

CB-13 — PRIVATE TRAPPED CATCH BASIN PER DETAIL ON SHEET C5.10
RIM: 208.60
6" IE OUT (W): 205.10

CB-14 — PRIVATE TRAPPED CATCH BASIN PER DETAIL ON SHEET C5.10
RIM: 208.60
6" IE OUT (W): 205.10

AD-06 — PRIVATE LANDSCAPE AREA DRAIN WITH FLAT GRATE PER DETAIL SHEET C5.10
RIM: 208.00
6" IE OUT (W): 204.50

AD-07 — PRIVATE LANDSCAPE AREA DRAIN WITH FLAT GRATE PER DETAIL SHEET C5.10
RIM: 207.90
6" IE OUT (W): 204.40

CONSTRUCTION NOTES

1. EXISTING PUBLIC WATER EASEMENT.
2. PROTECT EXISTING WATER SERVICE.
3. INSTALL 6" PERFORATED PIPE PVC PIPE ADJACENT TO BOTTOM OF FOOTING AT PERIMETER OF BUILDING. PERFORATED PIPE SHALL HAVE MINIMUM 6" DRAIN ROCK AT SIDES AND TOP OF PIPE.
4. CONNECT TO EXISTING STORM LINE PER CONNECTION DETAIL ON SHEET C5.10. EX IE=199.25±. POTHOLE EXISTING STORM LINE TO CONFIRM LOCATION AND DEPTH OF PIPE PRIOR TO CONSTRUCTION.
5. INSTALL 6" PRIVATE FIRE SERVICE VAULT WITH FDC PER CITY OF BEAVERTON STANDARD DETAIL 690-5A.
6. INSTALL FDC PER DETAIL ON SHEET C5.10.
7. CONNECT TO EXISTING 8" WATER MAIN WITH TAPPING SLEEVE PER CITY OF BEAVERTON STANDARD DETAIL 630-2. COORDINATE WITH CITY OF BEAVERTON.
8. INSTALL 6" DUCTILE IRON CLASS 52 THICKNESS WATERLINE WITH POLYETHYLENE ENCASEMENT CONFORMING TO CITY OF BEAVERTON DESIGN MANUAL PER DETAIL 680-3. WATERLINE SHALL BE FULLY RESTRAINED WITH PUSH-ON RESTRAINING GASKETS. TRENCH BACKFILL PER CITY OF BEAVERTON STANDARD DETAIL 620-1. MINIMUM 36" COVER OVER WATERLINE.
9. INSTALL 6" – 11.25° BEND WITH MECHANICAL RESTRAINTS.
10. INSTALL 6" – 45° BEND WITH MECHANICAL RESTRAINTS.
11. INSTALL 6" – 90° BEND WITH MECHANICAL RESTRAINTS.
12. INSTALL 6" DUCTILE IRON CLASS 52 THICKNESS WATERLINE WITH POLYETHYLENE ENCASEMENT CONFORMING TO CITY OF BEAVERTON DESIGN MANUAL PER DETAIL 680-3. WATERLINE SHALL BE FULLY RESTRAINED WITH PUSH-ON RESTRAINING GASKETS. TRENCH BACKFILL PER CITY OF BEAVERTON STANDARD DETAIL 620-1. MINIMUM 36" COVER OVER WATERLINE.
13. PROPOSED 15' WATERLINE EASEMENT.
14. CONNECT FOUNDATION DRAIN TO STORM LINE. INSTALL ACCESSIBLE BACKWATER FLAPPER VALVE PRIOR TO CONNECTION TO SOLID PIPE.
15. ROOF DRAIN OVERFLOW. REFER TO PLUMBING PLANS FOR OVERFLOW DOWNSPOUT NOZZLE.

HHPR Harper Houf Peterson Righellis Inc.
ENGINEERS • PLANNERS
LANDSCAPE ARCHITECTS • SURVEYORS
205 SE Spokane Street, Suite 200, Portland, OR 97202
phone: 503.221.1131 www.hhpr.com fax: 503.221.1171

BID/PERMIT SET

CONDITIONAL USE NUMBER: CU2018-0016
DESIGN REVIEW NUMBER: DR2018-0114
SITE DEVELOPMENT PERMIT NUMBER: TBD
BUILDING PERMIT NUMBER: TBD

REGISTERED PROFESSIONAL ENGINEER
59,971
OREGON
JUNE 11, 2005
JANELLE LYNN BRAHMAN
EXPIRES: 12/31/2019

BEAVERTON SCHOOL DISTRICT
ACMA
UTILITY PLAN

C5.2
74-18109-00
0314419
REVISIONS

DLR Group
Architecture Planning Interiors

© 2018, DLR Group Architecture & Planning Inc., an Oregon corporation. ALL RIGHTS RESERVED

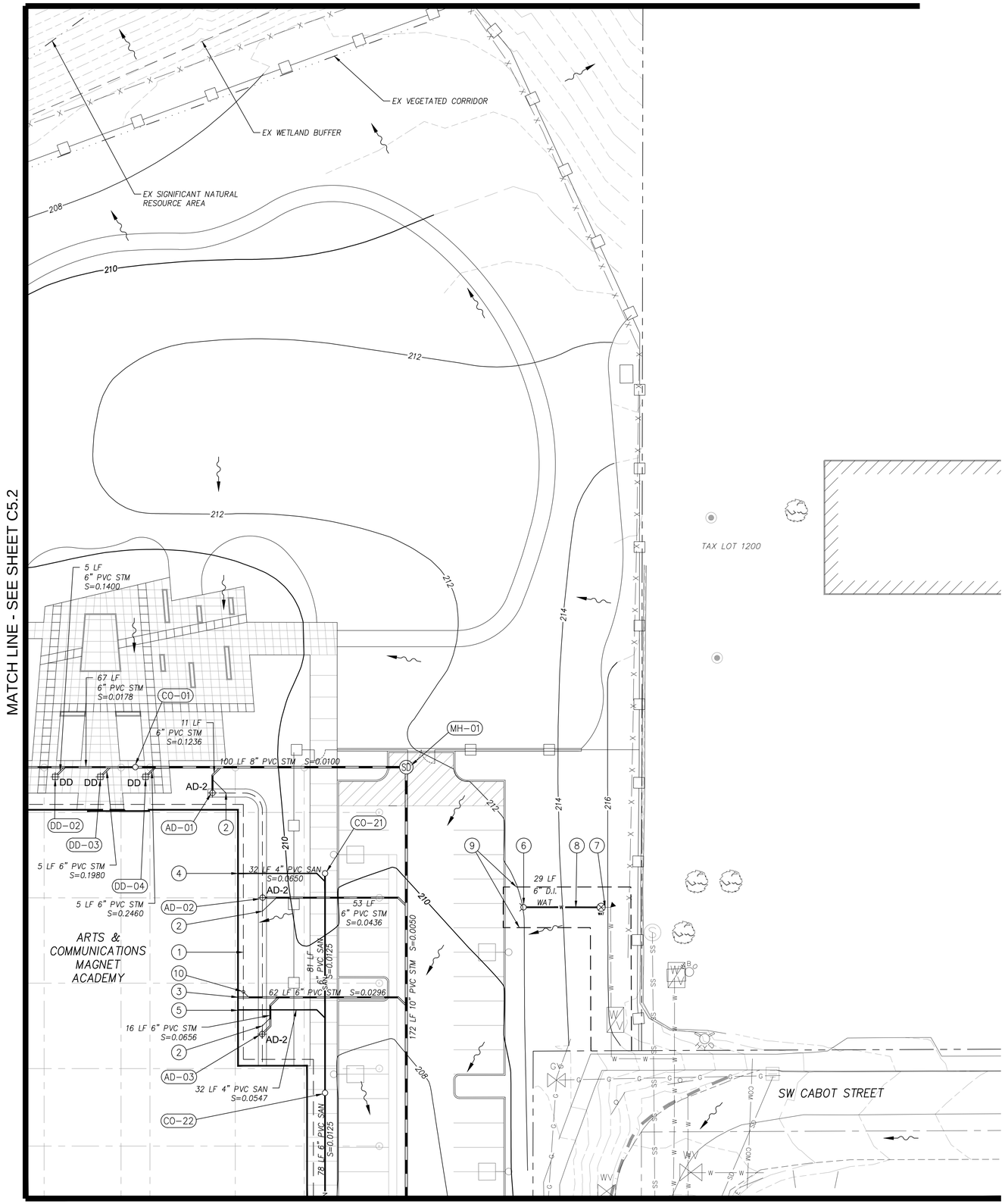

STORM CONSTRUCTION NOTES

MH-01 — 48" PRIVATE STORM MANHOLE PER CITY OF BEAVERTON STANDARD DRAWING 330
RIM: 211.65
8" IE IN (W): 202.55
10" IE OUT (S): 202.38

CO-01 — PRIVATE CLEANOUT PER CITY OF BEAVERTON STANDARD DETAIL 340
RIM: 208.35
6" IE: 203.63
8" IE: 203.55

DD-02 — STEEL CATCH BASIN PER DETAIL ON SHEET C5.10 WITH IRONSMITH VERTIGO 12" DRAIN GRATE PER DETAIL ON SHEET C5.9
RIM: 208.29
6" IE OUT (NE): 204.79

DD-03 — STEEL CATCH BASIN PER DETAIL ON SHEET C5.10 WITH IRONSMITH VERTIGO 12" DRAIN GRATE PER DETAIL ON SHEET C5.9
RIM: 208.29
6" IE OUT (NE): 204.79

DD-04 — STEEL CATCH BASIN PER DETAIL ON SHEET C5.10 WITH IRONSMITH VERTIGO 12" DRAIN GRATE PER DETAIL ON SHEET C5.9
RIM: 208.29
6" IE OUT (NE): 204.79

AD-01 — PRIVATE LANDSCAPE AREA DRAIN WITH ATRIUM GRATE PER DETAIL SHEET C5.10
RIM: 208.10
6" IE OUT (N): 204.60

AD-02 — PRIVATE LANDSCAPE AREA DRAIN WITH ATRIUM GRATE PER DETAIL SHEET C5.10
RIM: 208.10
6" IE OUT (E): 204.60

AD-03 — PRIVATE LANDSCAPE AREA DRAIN WITH ATRIUM GRATE PER DETAIL SHEET C5.10
RIM: 208.05
6" IE OUT (NE): 204.55

SANITARY CONSTRUCTION NOTES

CO-21 — PRIVATE CLEANOUT PER CITY OF BEAVERTON STANDARD DETAIL 340
RIM: 210.86
6" IE: 201.36

CO-22 — PRIVATE CLEANOUT PER CITY OF BEAVERTON STANDARD DETAIL 340
RIM: 208.38
6" IE: 200.34

CONSTRUCTION NOTES

1. INSTALL 6" PERFORATED PIPE PVC PIPE ADJACENT TO BOTTOM OF FOOTING AT PERIMETER OF BUILDING. PERFORATED PIPE SHALL HAVE MINIMUM 6" DRAIN ROCK AT SIDES AND TOP OF PIPE.
2. INSTALL 3" PERFORATED PIPE. CONNECT TO SITE STORM. SEE LANDSCAPE ARCHITECT PLANS.
3. STORM DRAIN CONNECTION. SEE PLUMBING PLANS FOR CONTINUATION. 6" IE = 203.94
4. SANITARY SEWER SERVICE CONNECTION TO BUILDING. SEE PLUMBING PLANS FOR CONTINUATION. 4" IE = 203.52
5. SANITARY SEWER SERVICE CONNECTION TO BUILDING. SEE PLUMBING PLANS FOR CONTINUATION. 4" IE = 202.52
6. INSTALL SALVAGED FIRE HYDRANT PER CITY OF BEAVERTON STANDARD DETAIL 650-2.
7. CONNECT PROPOSED HYDRANT SERVICE LINE TO EXISTING WATER STUB. CONTRACTOR TO POTHOLE EXISTING WATERLINE PRIOR TO CONSTRUCTION TO CONFIRM SIZE, DEPTH, AND LOCATION.
8. INSTALL 6" DUCTILE IRON CLASS 52 THICKNESS WATERLINE WITH POLYETHYLENE ENCASEMENT CONFORMING TO CITY OF BEAVERTON DESIGN MANUAL PER DETAIL 680-3. WATERLINE SHALL BE FULLY RESTRAINED WITH PUSH -ON RESTRAINING GASKETS. TRENCH BACKFILL PER CITY OF BEAVERTON STANDARD DETAIL 620-1. MINIMUM 36" COVER OVER WATERLINE. INSTALL SHUTOFF VALVE ON NEW WATERLINE.
9. PROPOSED 15' WATERLINE EASEMENT.
10. CONNECT FOUNDATION DRAIN TO STORM LINE. INSTALL ACCESSIBLE BACKWATER FLAPPER VALVE PRIOR TO CONNECTION TO SOLID PIPE.

Harper Houf Peterson Righellis Inc.
ENGINEERS • PLANNERS
LANDSCAPE ARCHITECTS • SURVEYORS
205 SE Spokane Street, Suite 200, Portland, OR 97202
phone: 503.221.1131 www.hhpr.com fax: 503.221.1171

BID/PERMIT SET

CONDITIONAL USE NUMBER: CU2018-0016
DESIGN REVIEW NUMBER: DR2018-0114
SITE DEVELOPMENT PERMIT NUMBER: TBD
BUILDING PERMIT NUMBER: TBD

REGISTERED PROFESSIONAL ENGINEER
59,971
OREGON
JUNE 11, 2005
JANELLE LYNN BRANNAN
EXPIRES: 12/31/2019

BEAVERTON SCHOOL DISTRICT
ACMA
UTILITY PLAN

C5.3
74-18109-00
03/14/19
REVISIONS

DLR Group
Architecture Planning Interiors

© 2018, DLR Group Architecture & Planning Inc., an Oregon corporation, ALL RIGHTS RESERVED

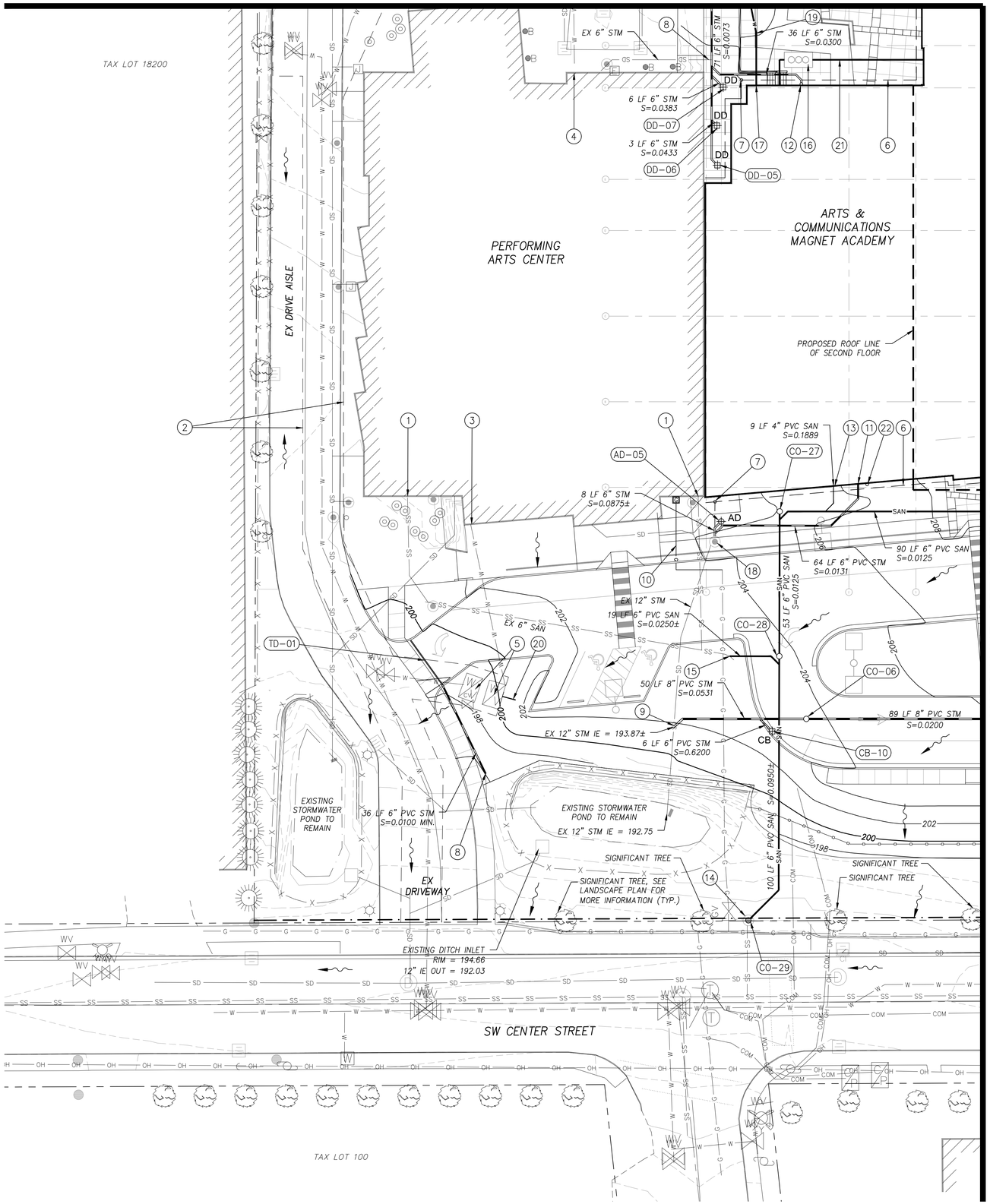

STORM CONSTRUCTION NOTES

CO-06 — PRIVATE CLEANOUT PER CITY OF BEAVERTON STANDARD DETAIL 340
RIM: 203.11
8" IE: 196.69

CB-10 — PRIVATE TRAPPED CATCH BASIN PER DETAIL ON SHEET C5.10
RIM: 203.00
6" IE OUT (NW): 199.50

DD-05 — STEEL CATCH BASIN PER DETAIL ON SHEET C5.10 WITH IRONSMITH VERTIGO 12" DRAIN GRATE PER DETAIL ON SHEET C5.9
RIM: 203.50
6" IE OUT (NW): 200.00

DD-06 — STEEL CATCH BASIN PER DETAIL ON SHEET C5.10 WITH IRONSMITH VERTIGO 12" DRAIN GRATE PER DETAIL ON SHEET C5.9
RIM: 203.50
6" IE OUT (NW): 200.00

DD-07 — STEEL CATCH BASIN PER DETAIL ON SHEET C5.10 WITH IRONSMITH VERTIGO 12" DRAIN GRATE PER DETAIL ON SHEET C5.9
RIM: 203.48
6" IE OUT (NW): 199.98

TD-01 — 20 LF PRIVATE ROADWAY TRENCH DRAIN PER DETAIL SHEET C5.10
RIM: 197.70 TO 199.05 (SEE LANDSCAPE ARCHITECT PLANS)
6" IE OUT (S): 194.20

AD-05 — PRIVATE LANDSCAPE AREA DRAIN WITH FLAT GRATE PER DETAIL SHEET C5.10
RIM: 203.30
6" IE OUT (SW): 199.80

SANITARY CONSTRUCTION NOTES

CO-27 — PRIVATE CLEANOUT PER CITY OF BEAVERTON STANDARD DETAIL 340
RIM: 204.00
6" IE: 195.20

CO-28 — PRIVATE CLEANOUT PER CITY OF BEAVERTON STANDARD DETAIL 340
RIM: 203.43
6" IE: 194.53

CO-29 — PRIVATE CLEANOUT PER CITY OF BEAVERTON STANDARD DETAIL 340
RIM: 193.85±
EX 6" IE: 185.00±

CONSTRUCTION NOTES

1. PROTECT EXISTING SANITARY SEWER SERVICE CONNECTION TO PAC.
2. EXISTING PUBLIC WATER EASEMENT.
3. PROTECT EXISTING DOMESTIC WATER SERVICE CONNECTION TO PAC.
4. PROTECT EXISTING FIRE WATER CONNECTION TO PAC.
5. PROTECT EXISTING DOMESTIC WATER METER AND BACKFLOW DEVICE. ADJUST LIDS TO FINISH GRADE.
6. INSTALL 6" PERFORATED PIPE PVC PIPE ADJACENT TO BOTTOM OF FOOTING AT PERIMETER OF BUILDING. PERFORATED PIPE SHALL HAVE MINIMUM 6" DRAIN ROCK AT SIDES AND TOP OF PIPE.
7. CONNECT FOUNDATION DRAIN TO STORM LINE. INSTALL ACCESSIBLE BACKWATER FLAPPER VALVE PRIOR TO CONNECTION TO SOLID PIPE.
8. CONNECT EXISTING 6" STORM LINE TO PROPOSED STORM LINE. POTHOLE EXISTING STORM LINE TO CONFIRM LOCATION AND DEPTH OF PIPE PRIOR TO CONSTRUCTION.
9. CONNECT EXISTING 12" STORM LINE TO PROPOSED STORM LINE. POTHOLE EXISTING STORM LINE TO CONFIRM LOCATION AND DEPTH OF PIPE PRIOR TO CONSTRUCTION.
10. GAS SERVICE TO PAC TO BE RELOCATED. RELOCATED GAS TO SERVE PAC AND NEW SCHOOL. COORDINATE ROUTING WITH PLUMBING. GAS METER LOCATION AND ADDITIONAL INFORMATION SHOWN ON PLUMBING PLANS.
11. STORM DRAIN CONNECTION. SEE PLUMBING PLANS FOR CONTINUATION.
6" IE = 199.94
12. STORM DOWNSPOUT CONNECTION FROM CANOPY. SEE DOWNSPOUT CONNECTION DETAIL ON SHEET C5.12.
6" IE = 200.80
13. SANITARY SEWER SERVICE CONNECTION TO BUILDING. SEE PLUMBING PLANS FOR CONTINUATION.
4" IE = 197.19
14. CONNECT TO EXISTING SANITARY SERVICE AT PROPERTY LINE. REMOVE EXISTING CLEANOUT AND INSTALL NEW CLEANOUT.
15. CONNECT EXISTING 6" SANITARY SERVICE TO PROPOSED SANITARY SERVICE. POTHOLE EXISTING SANITARY LINE TO CONFIRM LOCATION AND DEPTH OF PIPE PRIOR TO CONSTRUCTION.
IE = 195.00±
16. GREASE INTERCEPTOR. SEE PLUMBING PLANS.
17. FIRE WATER POINT OF CONNECTION. SEE FIRE PROTECTION PLANS FOR CONTINUATION.
18. CONNECT TO EXISTING STORM CLEANOUT. ADJUST CLEANOUT RIM TO FINISH GRADE.
EX 12" IE = 199.10±
19. INSTALL 6" – 11.25° BEND WITH MECHANICAL RESTRAINTS.
20. INSTALL 2" WATER STUB FOR IRRIGATION POINT OF CONNECTION. POTHOLE TO CONFIRM LOCATION OF EXISTING WATER LINE. SEE LANDSCAPE PLANS.
21. 4" SANITARY LINE FOR REFERENCE ONLY. SEE PLUMBING PLANS FOR MORE INFORMATION.
22. ROOF DRAIN OVERFLOW. REFER TO PLUMBING PLANS FOR OVERFLOW DOWNSPOUT NOZZLE.

HHPR Harper Houf Peterson Righellis Inc.
ENGINEERS • PLANNERS
LANDSCAPE ARCHITECTS • SURVEYORS
205 SE Spokane Street, Suite 200, Portland, OR 97202
phone: 503.221.1131 www.hhpr.com fax: 503.221.1171

BID/PERMIT SET

CONDITIONAL USE NUMBER: CUD2018-0016
DESIGN REVIEW NUMBER: DR2018-0114
SITE DEVELOPMENT PERMIT NUMBER: TBD
BUILDING PERMIT NUMBER: TBD

REGISTERED PROFESSIONAL ENGINEER 59,971 OREGON JANUARY 11, 2005 JANELLE LYNN BRANNAN
EXPIRES: 12/31/2019

BEAVERTON SCHOOL DISTRICT
ACMA
UTILITY PLAN

C5.4
74-18109-00
03/14/19
REVISIONS

DLR Group
Architecture Planning Interiors

© 2018, DLR Group Architecture & Planning Inc., an Oregon corporation. ALL RIGHTS RESERVED

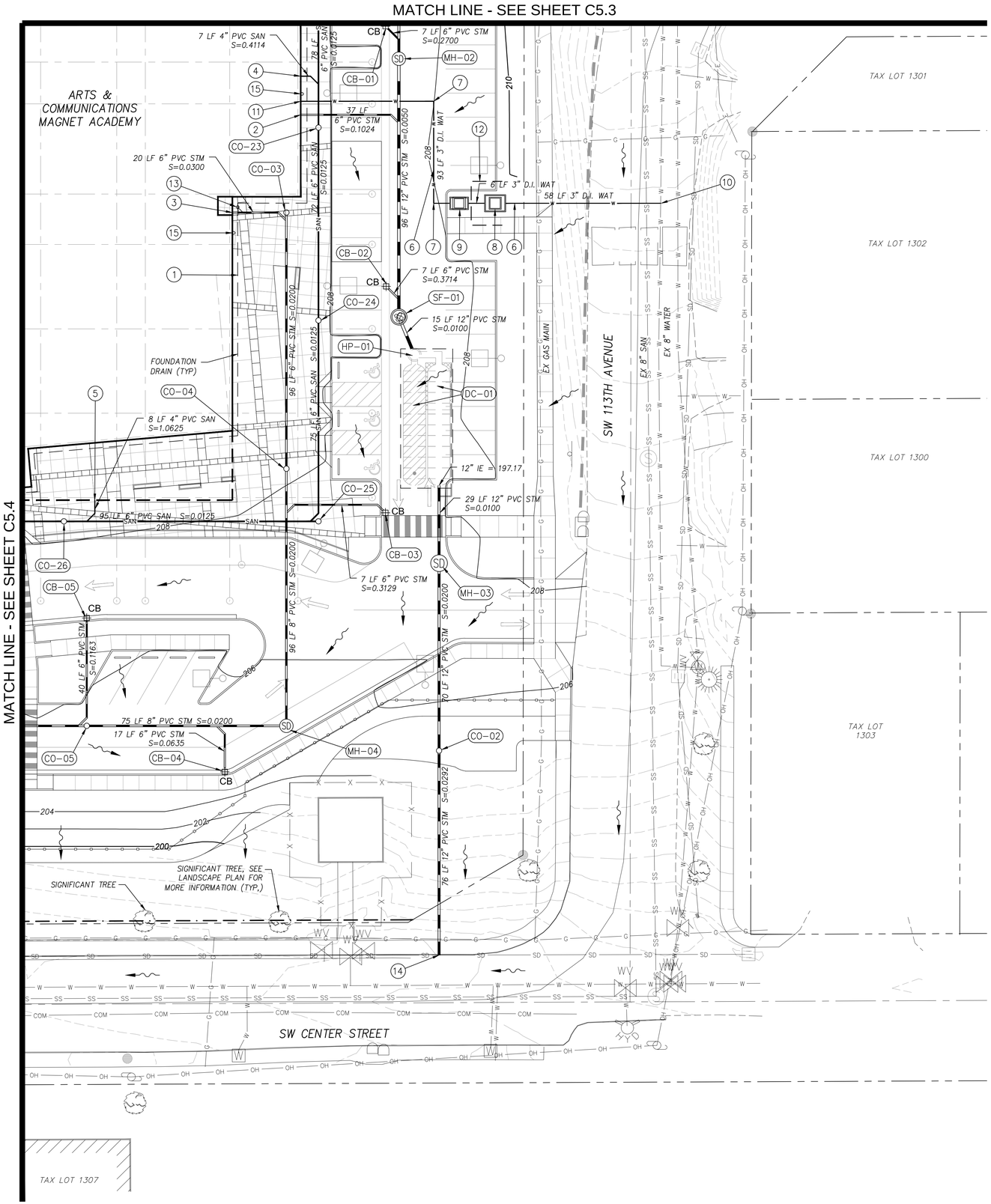

STORM CONSTRUCTION NOTES

(SF-01) INSTALL STORMFILTER MECHANICAL TREATMENT MANHOLE WITH 4 CARTRIDGES PER DETAIL SHEET C5.10
RIM: 207.15
12" IE IN (N) = 200.87
12" IE OUT (SE) = 197.82

(DC-01) INSTALL STORMWATER DETENTION CHAMBERS PER DETAIL SHEETS C5.11 & C5.12
2 ROWS AT 45° LONG EACH
SEE DETAILS FOR STRUCTURE AND INVERT ELEVATIONS

(HP-01) INSTALL 48" ADS TRIPLE WALL HP MANHOLE PER DETAIL ON SHEET C5.12
RIM: 207.35
12" IE IN (NW): 197.67
24" IE OUT (S): 197.23
24" IE OUT (E): 198.96

(MH-02) 48" PRIVATE STORM MANHOLE PER CITY OF BEAVERTON STANDARD DRAWING 330
RIM: 207.38
10" IE IN (N): 201.52
12" IE OUT (S): 201.35

(MH-03) PRIVATE 60" STORM FLOW-CONTROL MANHOLE PER CITY OF BEAVERTON STANDARD DRAWING 360
RIM: 207.19
12" IE IN (N): 196.88
12" IE OUT (S): 196.88

(MH-04) 48" PRIVATE STORM MANHOLE PER CITY OF BEAVERTON STANDARD DRAWING 330
RIM: 204.85
8" IE IN (N): 200.17
8" IE OUT (W): 199.97

(CO-02) PRIVATE CLEANOUT PER CITY OF BEAVERTON STANDARD DETAIL 340
RIM: 204.60
12" IE: 194.48

(CO-03) PRIVATE CLEANOUT PER CITY OF BEAVERTON STANDARD DETAIL 340
RIM: 208.33
6" IE: 204.09

(CO-04) PRIVATE CLEANOUT PER CITY OF BEAVERTON STANDARD DETAIL 340
RIM: 208.23
6" IE: 202.17
8" IE: 202.09

(CO-05) PRIVATE CLEANOUT PER CITY OF BEAVERTON STANDARD DETAIL 340
RIM: 205.66
8" IE: 198.47

(CB-01) PRIVATE TRAPPED CATCH BASIN PER DETAIL ON SHEET C5.10
RIM: 207.20
6" IE OUT (SE): 203.70

(CB-02) PRIVATE TRAPPED CATCH BASIN PER DETAIL ON SHEET C5.10
RIM: 207.00
6" IE OUT (SE): 203.50

(CB-03) PRIVATE TRAPPED CATCH BASIN PER DETAIL ON SHEET C5.10
RIM: 207.05
6" IE OUT (NW): 203.55

(CB-04) PRIVATE TRAPPED CATCH BASIN PER DETAIL ON SHEET C5.10
RIM: 204.10
6" IE OUT (N): 200.60

(CB-05) PRIVATE TRAPPED CATCH BASIN PER DETAIL ON SHEET C5.10
RIM: 206.70
6" IE OUT (S): 203.20

SANITARY CONSTRUCTION NOTES

(CO-23) PRIVATE CLEANOUT PER CITY OF BEAVERTON STANDARD DETAIL 340
RIM: 208.38
6" IE: 199.36

(CO-24) PRIVATE CLEANOUT PER CITY OF BEAVERTON STANDARD DETAIL 340
RIM: 208.33
6" IE: 198.46

(CO-25) PRIVATE CLEANOUT PER CITY OF BEAVERTON STANDARD DETAIL 340
RIM: 207.83
6" IE: 197.52

(CO-26) PRIVATE CLEANOUT PER CITY OF BEAVERTON STANDARD DETAIL 340
RIM: 208.11
6" IE: 196.33

CONSTRUCTION NOTES

1. INSTALL 6" PERFORATED PIPE PVC PIPE ADJACENT TO BOTTOM OF FOOTING AT PERIMETER OF BUILDING. PERFORATED PIPE SHALL HAVE MINIMUM 6" DRAIN ROCK AT SIDES AND TOP OF PIPE.
2. STORM DRAIN CONNECTION. SEE PLUMBING PLANS FOR CONTINUATION.
   6" IE = 205.27
3. STORM DRAIN CONNECTION. SEE PLUMBING PLANS FOR CONTINUATION.
   6" IE = 204.68
4. SANITARY SEWER SERVICE CONNECTION TO BUILDING. SEE PLUMBING PLANS FOR CONTINUATION.
   4" IE = 202.52
5. SANITARY SEWER SERVICE CONNECTION TO BUILDING. SEE PLUMBING PLANS FOR CONTINUATION.
   4" IE = 205.02
6. INSTALL 3" DUCTILE IRON CLASS 52 THICKNESS WATERLINE WITH POLYETHYLENE ENCASEMENT CONFORMING TO CITY OF BEAVERTON DESIGN MANUAL PER DETAIL 680-3. WATERLINE SHALL BE FULLY RESTRAINED WITH PUSH -ON RESTRAINING GASKETS. TRENCH BACKFILL PER CITY OF BEAVERTON STANDARD DETAIL 620-1. MINIMUM 36" COVER OVER WATERLINE.
7. INSTALL 3" - 90° BEND WITH MECHANICAL RESTRAINTS.
8. INSTALL 3" DOMESTIC WATER METER PER CITY OF BEAVERTON STANDARD DETAIL 670-3.
9. INSTALL 3" DOMESTIC WATER DOUBLE CHECK BACKFLOW DEVICE PER CITY OF BEAVERTON STANDARD DETAIL 690-4A.
10. CONNECT TO EXISTING 8" WATER MAIN. USE TAPPING SLEEVE PER CITY OF BEAVERTON STANDARD DETAIL 630-2. COORDINATE WITH CITY OF BEAVERTON.
11. DOMESTIC WATER SERVICE CONNECTION TO BUILDING. SEE PLUMBING PLANS.
12. PROPOSED WATER METER VAULT PUBLIC UTILITY EASEMENT. EASEMENT EXTENDS 5' BEYOND EXTENTS OF VAULT.
13. CONNECT FOUNDATION DRAIN TO STORM LINE. INSTALL ACCESSIBLE BACKWATER FLAPPER VALVE PRIOR TO CONNECTION TO SOLID PIPE.
14. CONNECT TO EXISTING PUBLIC STORM LINE PER CITY OF BEAVERTON STANDARDS. POTHOLE EXISTING STORM LINE TO CONFIRM LOCATION AND DEPTH OF PIPE PRIOR TO CONSTRUCTION. COORDINATE WITH CITY OF BEAVERTON.
    EX 12" IE = 192.28±
15. ROOF DRAIN OVERFLOW. REFER TO PLUMBING PLANS FOR OVERFLOW DOWNSPOUT NOZZLE.

HHPR Harper Houf Peterson Righellis Inc.
ENGINEERS • PLANNERS
LANDSCAPE ARCHITECTS • SURVEYORS
205 SE Spokane Street, Suite 200, Portland, OR 97202
phone: 503.221.1131 www.hhpr.com fax: 503.221.1171

BID/PERMIT SET

CONDITIONAL USE NUMBER: CU2018-0016
DESIGN REVIEW NUMBER: DR2018-0114
SITE DEVELOPMENT PERMIT NUMBER: TBD
BUILDING PERMIT NUMBER: TBD

REGISTERED PROFESSIONAL ENGINEER
59,971
OREGON
JANUARY 11, 2005
JANELLE LYNN BRANNAN
EXPIRES: 12/31/2019

BEAVERTON SCHOOL DISTRICT

ACMA

UTILITY PLAN

C5.5
74-18109-00
03/14/19
REVISIONS

DLR Group
Architecture Planning Interiors

© 2018, DLR Group Architecture & Planning Inc., an Oregon corporation. ALL RIGHTS RESERVED

Harper Houf Peterson Righellis Inc.
ENGINEERS • PLANNERS
LANDSCAPE ARCHITECTS • SURVEYORS
205 SE Spokane Street, Suite 200, Portland, OR 97202
phone: 503.221.1131 www.hhpr.com fax: 503.221.1171

BID/PERMIT SET

CONDITIONAL USE NUMBER: CUD2018-0016
DESIGN REVIEW NUMBER: DR2018-0114
SITE DEVELOPMENT PERMIT NUMBER: TBD
BUILDING PERMIT NUMBER: TBD

REGISTERED PROFESSIONAL ENGINEER
59,971
OREGON
JUNE 11, 2005
JANELLE LYNN BRANNAN
EXPIRES: 12/31/2019

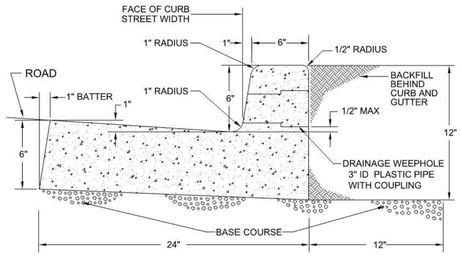

NOTES:

1. For use along medians, gutters may be reduced when preapproved by City Engineer.
2. Concrete to have compressive strength of 4,000 psi at 28 days.
3. Expansion joints to be provided at each:
   a. Point of tangency.
   b. Cold joint.
   c. Side of inlet structures.
   d. Side of driveways.
4. Expansion joint material to be pre-molded, asphalt impregnated, non-extruding, with a thickness of 1/2 inch.
5. Contraction Joints shall have:
   a. Spacing of not more than 15 feet.
   b. Depth of joint of at least 1½ inches.
6. Base rock 1½"-0 or 3/4"-0, 95% (*AASHTO* T-180) compaction. Base rock shall be to subgrade of street structure or 7.5 inches, whichever is greater, and shall extend 12 inches behind the curb.
7. Drainage weephole shall be:
   a. 3-inch diameter I.D. plastic pipe with coupling and beveled outlet end to match face of curb.
   b. Centered with contraction joints.
   c. Core-drilled through existing curbs for drainage access.
8. Proof roll subgrade and base rock section prior to placement of curb.

Beaverton Engineering	STANDARD MONOLITHIC CURB AND GUTTER	SCALE: NONE DATE: JUNE 2018	205

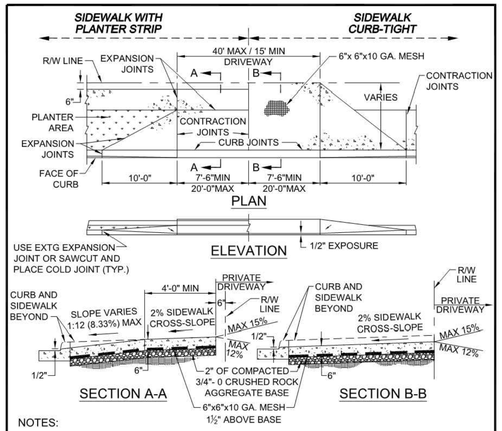

NOTES:

1. Section A-A may be used for curb-tight sidewalk driveway aprons if sidewalk's width is 10' or more.
2. Concrete shall have a minimum breaking strength of 4,000 psi after 28 days.
3. Curb joint shall be a troweled joint with a minimum 1/2 inch radius along back of curb.
4. Expansion joints shall be 1/2 inch pre-molded asphalt impregnated material, cedar or approved equal extending from top of base to finished grade.
5. For driveways 24 feet wide or greater, concrete to be increased to a 7 inch depth.
6. Finish with broom and edge all joints.
7. Weepholes not to be placed in wing.
8. If curbing is being removed to install a driveway and the gutter should become separated from the driving surface in excess of 1/16 inch, then the gutter shall also be removed and replaced.
9. Wings of the commercial driveway which are a portion of the sidewalk shall not exceed 8.333% (1:12).
10. ODOT Standard Drawings for driveways may be used when preapproved by City Engineer.
11. Slope of the driveway may be away from the curb when preapproved by City Engineer.

Beaverton Engineering	STANDARD COMMERCIAL DRIVEWAY	SCALE: NONE DATE: JUNE 2018	210

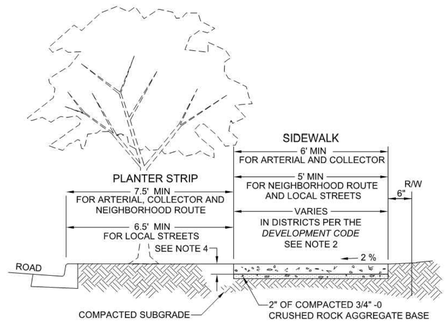

NOTES:

1. Concrete shall have a minimum compressive strength of 4,000 psi at 28 days. For slump see specifications.
2. Sidewalk panels shall be square with their length equal to the sidewalk's width, except that sidewalks in the Regional Center, Town Center, Station Area and Station Community districts may be wider than 6 feet, in which cases their panels may be 4 to 6 feet square, but all of equal size.
3. Expansion joints to be placed at sides of driveway approaches, utility vaults, sidewalk ramps and/or at points of tangency in curb as shown on the standard drawings for sidewalk ramps and at spacing not to exceed 45 feet.
4. Sidewalk shall have a minimum thickness of 4 inches, except that sidewalk that is intended as a portion of a driveway shall have a minimum thickness of 6 inches. See *Beaverton Standard Dwgs* 210 & 211.
5. Finish with broom and edge all joints.
6. Width of curb is included in planter strip width.
7. Street trees are required except where specifically modified or waived in writing by the City Engineer.
8. For sidewalk repairs, replacements and installations in existing developments, match existing width of sidewalks, and sidewalk panels' widths and lengths.

Beaverton Engineering	STANDARD SIDEWALK	SCALE: NONE DATE: JUNE 2018	215

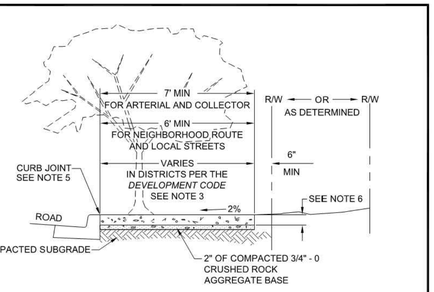

NOTES:

1. Curb tight sidewalks **REQUIRE PREAPPROVAL** by the City Engineer. They are used for sidewalk repairs, replacements and installations in existing developments. Match width of existing sidewalks, and widths and lengths of existing sidewalk panels.
2. Concrete shall have a minimum compressive strength of 4,000 psi at 28 days, For slump see specifications.
3. Sidewalk panels shall be square with their length equal to the sidewalk's width, except that sidewalks in the Regional Center, Town Center, Station Area and Station Community districts may be wider than 6 feet, in which cases their panels may be 4 to 6 feet square, but all of equal size.
4. Expansion joints to be placed at sides of driveway approaches, utility vaults, sidewalk ramps and/or at points of tangency in curb as shown on the standard drawings for sidewalk ramps and at spacing not to exceed 45 feet.
5. For sidewalks adjacent to the curb and poured at the same time as the curb, the joint between them shall be troweled with a minimum 1/2 inch radius.
6. Sidewalk shall have a minimum thickness of 4 inches, except that sidewalk that is intended as a portion of a driveway shall have a minimum thickness of 6 inches. See Drawings 210 & 211.
7. Where vehicular access across sidewalk is required by City, a 40 foot long section of sidewalk shall be provided in the access area, shall be 6-inches thick and shall be reinforced with 6"x6"x10 ga steel mesh. Location of 40 foot long section to be as directed by City Engineer.
8. Finish with broom and edge all joints.
9. Street trees, treewells and grates are required except where specifically modified or waived in writing by the City Engineer.
10. For sidewalk widths around grated treewells, and tree grate requirements, see *Beaverton Standard Dwg* 241.

Beaverton Engineering	CURB TIGHT SIDEWALK	SCALE: NONE DATE: JUNE 2018	216

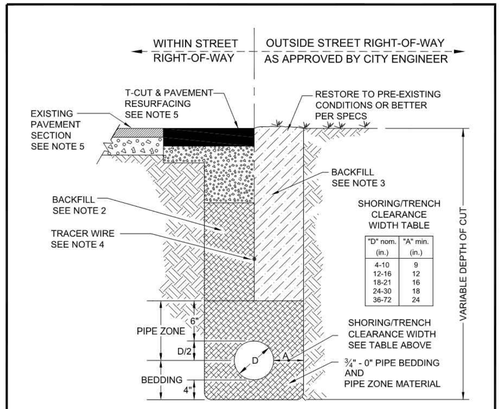

NOTES:

1. These trench backfill requirements apply to all public utility pipes. For additional requirements, see *CWS Design and Construction Standards* and City's *Engineering Design Manual* section 211.
2. For trenches 12" wide or less in streets with classifications higher than Residential, use controlled density fill (CDF) as per sec 210.19. For all other trenches, use 3/4" - 0" aggregate compacted to 95% of max density per *AASHTO* t-99 and *ODOT/APWA spec* 00405.
3. Use class 'A' backfill compacted to 90% of max density per *AASHTO* t-99 and *ODOT/APWA spec* 00405.
4. Tracer wire shall be placed above non-metalic pipe and 2 feet below finished grade when required by Oregon State Plumbing code. Reference City's EDM section 211.1.4.o. Storm and sanitary sewer services shall be marked with magnetic tape per CWS D&C section 5.09.4.c
5. Restore to original conditions or better. See specifications and drawing 302.
6. For conduit trench requirements see drawing 301.
7. The City reserves the right to require compaction testing of the bedding material when it exceeds the 4-inch base section beneath the pipe.

Beaverton Engineering	PIPE TRENCH BACKFILL	SCALE: NONE DATE: JUNE 2018	300

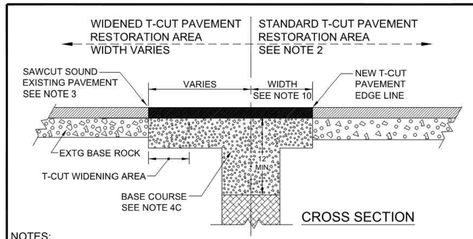

NOTES:

1. This drawing applies to trench cuts and other kinds of pavement cuts.
2. For width dimensions, see *Engineering Design Manual* and the notes that follow.
3. Sawcut existing AC pavement full depth. Sawcut existing PCC pavement according to Drawing 310
4. Restore existing pavement material(s) to pre-existing or better conditions. Thickness shall be as follows:
   a. For existing Portland Cement Concrete (PCC): existing pavement thickness plus 2 inches, but not less than 8 inches. On Arterial and Collector streets, concrete patching material shall be high early strength class 5,000 psi PCC approved by City Engineer.
   b. For existing Asphalt Concrete (AC): resurface to a minimum of 3½" of Level 2, ½" ACP or existing AC thickness plus 2 inches, whichever is greater, but do not exceed 6 inches. Compact AC in 2-inch maximum lifts to 91% of maximum density (*Rice*).
   c. Base course shall be 3/4"-0 aggregate compacted to 95% of max density as per *AASHTO* T-99 and *ODOT/APWA* Spec 00405. Minimum thickness shall be 8 inches under AC pavement and 2 inches under PCC pavement.
5. All cut edges of AC shall be sand sealed with CRS-1 or CRS-2 emulsified asphalt or equal.
6. If new edge of pavement is less than three feet from another patch, curb or edge of street, replace the pavement in between.
7. If any part of more than one pre-existing patch edge is within 3 feet of the T-cut, remove and restore the pavement to the far edge of the furthest pre-existing patch.
8. On longitudinal pavement cuts, the edge of the T-cut shall not lie in a wheel path. Width of T-cut shall be widened where necessary to move the edge out of the wheel path and either to parallel and 6 inches from the nearest lane line, or to the location required by note 6 or 7 above as applicable, whichever is the furthest from the pavement cut.
9. If an edge of a T-cut will be within 5 feet or less of an area of distressed existing pavement, the length and width of the pavement restoration shall be determined by City Engineer upon notification by the Contractor.
10. Width from edge of trench shall be 6 inches minimum for trenches that are 12 inches wide or less and 12 inches minimum for trenches wider than 12 inches. The width may be increased up to 10 feet on both sides of the pavement cut as approved by City Engineer.

Beaverton Engineering	PAVEMENT CUT RESTORATION	SCALE: NONE DATE: JUNE 2018	302

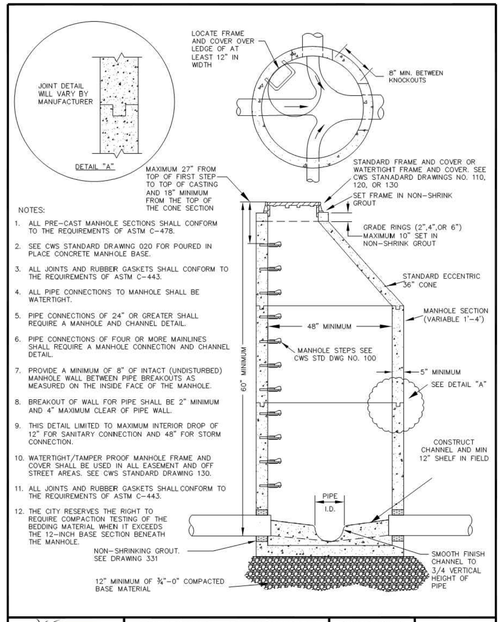

NOTES:

1. ALL PRE-CAST MANHOLE SECTIONS SHALL CONFORM TO THE REQUIREMENTS OF ASTM C-478.
2. SEE CWS STANDARD DRAWING 020 FOR POURED IN PLACE CONCRETE MANHOLE BASE.
3. ALL JOINTS AND RUBBER GASKETS SHALL CONFORM TO THE REQUIREMENTS OF ASTM C-443.
4. ALL PIPE CONNECTIONS TO MANHOLE SHALL BE WATERTIGHT.
5. PIPE CONNECTIONS OF 24" OR GREATER SHALL REQUIRE A MANHOLE AND CHANNEL DETAIL.
6. PIPE CONNECTIONS OF FOUR OR MORE MAINLINES SHALL REQUIRE A MANHOLE CONNECTION AND CHANNEL DETAIL.
7. PROVIDE A MINIMUM OF 8" OF INTACT (UNDISTURBED) MANHOLE WALL BETWEEN PIPE BREAKOUTS AS MEASURED ON THE INSIDE FACE OF THE MANHOLE.
8. BREAKOUT OF WALL FOR PIPE SHALL BE 2" MINIMUM AND 4" MAXIMUM CLEAR OF PIPE WALL.
9. THIS DETAIL LIMITED TO MAXIMUM INTERIOR DROP OF 12" FOR SANITARY CONNECTION AND 48" FOR STORM CONNECTION.
10. WATERTIGHT/TAMPER PROOF MANHOLE FRAME AND COVER SHALL BE USED IN ALL EASEMENT AND OFF STREET AREAS. SEE CWS STANDARD DRAWING 130.
11. ALL JOINTS AND RUBBER GASKETS SHALL CONFORM TO THE REQUIREMENTS OF ASTM C-443.
12. THE CITY RESERVES THE RIGHT TO REQUIRE COMPACTION TESTING OF THE BEDDING MATERIAL WHEN IT EXCEEDS THE 12-INCH BASE SECTION BENEATH THE MANHOLE.

Beaverton Engineering	CWS STANDARD MANHOLE WITH C.O.B. MODIFICATIONS	SCALE: NONE DATE: JUNE 2018	330

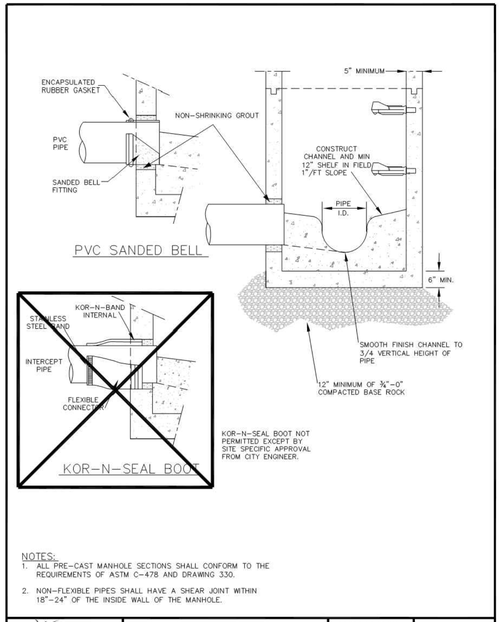

NOTES:

1. ALL PRE-CAST MANHOLE SECTIONS SHALL CONFORM TO THE REQUIREMENTS OF ASTM C-478 AND DRAWING 330.
2. NON-FLEXIBLE PIPES SHALL HAVE A SHEAR JOINT WITHIN 18"-24" OF THE INSIDE WALL OF THE MANHOLE.

Beaverton Engineering	MANHOLE CONNECTIONS	SCALE: NONE DATE: JUNE 2018	331

FILENAME: 300.dwg

UTILITY DETAILS
ACMA
BEAVERTON SCHOOL DISTRICT

C5.6
74-18109-00
03/14/19
REVISIONS

DLR Group
Architecture Planning Interiors

© 2018, DLR Group Architecture & Planning Inc., an Oregon corporation, ALL RIGHTS RESERVED

Harper Houf Peterson Righellis Inc.
ENGINEERS • PLANNERS
LANDSCAPE ARCHITECTS • SURVEYORS
205 SE Spokane Street, Suite 200, Portland, OR 97202
phone: 503.221.1131 www.hhpr.com fax: 503.221.1171

BID/PERMIT SET

CONDITIONAL USE NUMBER: CUD2018-0016
DESIGN REVIEW NUMBER: DR2018-0114
SITE DEVELOPMENT PERMIT NUMBER: TBD
BUILDING PERMIT NUMBER: TBD

REGISTERED PROFESSIONAL ENGINEER
59,971
OREGON
JUNE 11, 2005
JANELLE LYNN BRAHMAN
EXPIRES: 12/31/2019

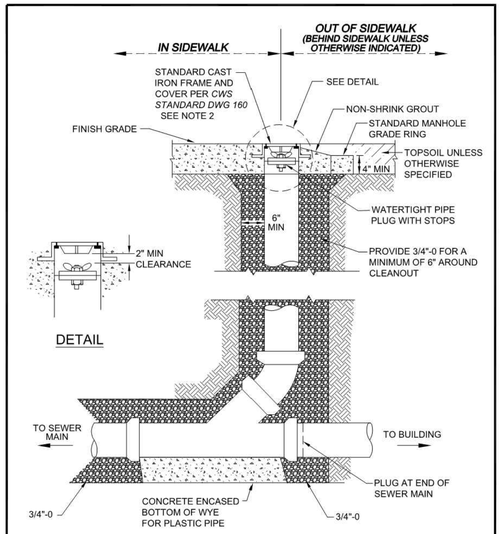

NOTES:
1. Concrete encase entire wye section and 45° bend if concrete pipe.
2. Cleanout in sidewalk to be centered in sidewalk width.

Beaverton Engineering	STANDARD CLEANOUT IN EXISTING STREET	SCALE: NONE DATE: JUNE 2018	340

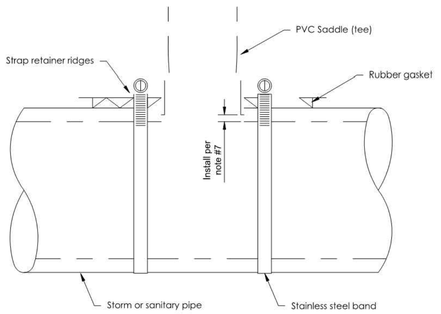

1. Indexed PVC gasketed saddle shall conform to ASTM 3034 SDR35.
2. PVC compounds shall conform to ASTM d1784 with cell class of 12454-B/C or 12364-C.
3. All elastomeric seals (rubber gaskets) shall conform to ASTM F477.
4. Indexed PVC gasketed saddle shall be installed with rubber gaskets approved for the sewer main wall configuration (profile or smooth wall).
5. Stainless steel bands shall be 300 series, 5/16" band width, cadmium plated, carbon steel, and attached with hex head, slotted screws.
6. Insertion hole shall be core drilled.
7. Indexed saddle shall be inserted a minimum of 1/4" from outside wall of host pipe and shall not protrude beyond the inside wall of the host pipe.

Beaverton Engineering	PVC GASKETED SADDLE	SCALE: NONE DATE: JUNE 2018	520

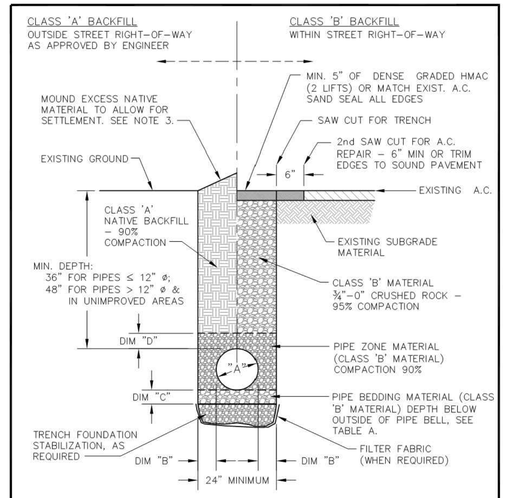

TABLE A			
"A" (IN)	"B" (IN)	"C" (IN)	"D" (IN)
4	10	4	8
6	9	4	8
8	8	6	10
12	8	6	10
16	8	6	12
24	8	6	12

NOTES:
1. "A" = NOMINAL PIPE DIAMETER
2. SEE "CITY OF BEAVERTON ENGINEERING DESIGN MANUAL" FOR ADDITIONAL REQUIREMENTS.
3. RESTORE LANDSCAPE TO PRE-EXISTING CONDITIONS OR BETTER.

Beaverton Engineering	TYPICAL WATER LINE TRENCH BACKFILL	SCALE: NONE DATE: JUNE 2018	620-1

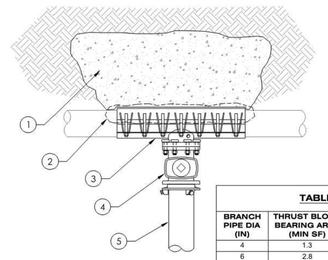

TABLE 1		
BRANCH PIPE DIA (IN)	THRUST BLOCK BEARING AREA (MIN SF)	THRUST BLOCK CONCRETE (MIN CY)
4	1.3	0.05
6	2.8	0.10
8	5.0	0.18
10	11.3	0.42
12	20.1	0.75
18	26.0	0.97

KEYNOTES:
1. CONCRETE THRUST BLOCK POURED AGAINST UNDISTURBED EARTH. THRUST BLOCK SIZE SHALL BE PER TABLE 1 AND SHALL NOT BE LESS THAN ONE FOOT IN ANY DIMENSION. CONCRETE SHALL BE CLASS 3000.
2. COVER TAPPING SLEEVE WITH 8 MIL PLASTIC MATERIAL AS SHOWN PRIOR TO POURING THRUST BLOCK AND BACKFILLING.
3. STAINLESS STEEL TAPPING SLEEVE WITH GASKET AND FLANGED CONNECTION.
4. GATE VALVES 10" AND LARGER WITH LESS THAN 24" BETWEEN THE OPERATING NUT AND FINISHED GRADE WILL REQUIRE A HORIZONTAL BEVEL GEAR ACTUATOR.
5. ALL JOINTS ON BRANCH PIPE SHALL BE RESTRAINED.

NOTES: (TAPPING CONTRACTOR ONLY)
1. BEFORE INSTALLING TAPPING SLEEVE, CONTRACTOR SHALL THOROUGHLY CLEAN PIPE TO REMOVE ALL DIRT, ROCKS, AND OTHER FOREIGN MATERIAL FROM PIPE WHERE SLEEVE WILL BE INSTALLED.
2. SLEEVE BOLTS SHALL BE TIGHTENED TO MANUFACTURER'S TORQUE SPECIFICATIONS.
3. CONTRACTOR SHALL ENSURE THAT GASKET IS PROPERLY ALIGNED AND FREE OF FOREIGN MATERIAL PRIOR TO TIGHTENING SLEEVE BOLTS.
4. SLEEVE LOCATION AND INSTALLATION SHALL BE APPROVED BY WATER OPERATIONS INSPECTOR PRIOR TO TAPPING.
5. CONTRACTOR SHALL AIR TEST SLEEVE TO 40 PSI PRIOR TO TAPPING.
6. CONTRACTOR SHALL FLUSH VALVE PRIOR TO PIPE CONNECTION.
7. EDGE OF TAPPING SLEEVE SHALL BE A MINIMUM OF 18" FROM BEND OR JOINT

Beaverton Engineering	TAPPING SLEEVE	SCALE: NONE DATE: JUNE 2018	630-2

(HORIZONTAL)
BEARING AREA OF THRUST BLOCKS IN SQ FT

FITTING SIZE	TEE	90° BEND	45° BEND	22 1/2° BEND	11 1/4° BEND
4	1.3	1.8	1.0	1.0	1.0
6	2.8	4.0	2.2	1.1	1.0
8	5.0	7.1	3.8	2.0	1.0
12	11.3	16.0	8.7	4.4	2.2
16	20.1	28.4	15.4	7.8	3.9
20	31.1	44.4	24.0	12.3	6.2
24	45.2	64.0	34.6	17.7	8.9

VOLUME OF THRUST BLOCK IN CU YDS (VERTICAL)

FITTING SIZE	BEND ANGLE		
	45°	22.5°	11.25°
4	1.1	0.4	0.2
6	2.7	1.0	0.4
8	4.0	1.5	0.6
12	8.5	3.2	1.3
16	14.8	5.6	2.3

VALUES BASED ON 200 PSI WATER PRESSURE AND 2000 PSF SOIL BEARING CAPACITY

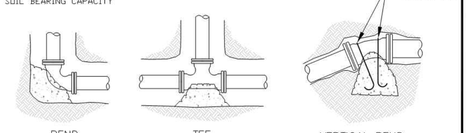

FITTING SIZE	REBAR SIZE	EMBEDMENT
4"-12"	#6	30"
14"-16"	#8	36"

NOTES:
1. ALL PIPE FITTING TEES, BENDS, AND DEAD ENDS SHALL BE RESTRAINED BY CONCRETE THRUST BLOCKING OR MECHANICAL PIPE JOINT RESTRAINTS.
2. CONCRETE THRUST BLOCKING OR STRADDLE BLOCKS SHALL BE USED ONLY ON EXISTING PIPES WITH NO MECHANICAL RESTRAINTS OR AT LOCATIONS WHERE MECHANICAL PIPE JOINT RESTRAINTS ARE NOT FEASIBLE. PRIOR APPROVAL BY WATER OPERATIONS IS REQUIRED. SEE DRAWING 630-8 FOR STRADDLE BLOCK REQUIREMENTS.
3. ALL CONCRETE THRUST BLOCKING SHALL BE POURED AGAINST UNDISTURBED EARTH.
4. ALL CONCRETE SHALL BE CLASS 3000.
5. INSTALL MINIMUM 8-MIL TOTAL THICKNESS POLYETHYLENE SHEET AROUND FITTING. SECURE SHEET ENDS TO PREVENT INFILTRATION OF DIRT BETWEEN SHEET AND PIPE FITTING PRIOR TO POURING CONCRETE.
6. PROTECT MECHANICAL JOINT FOLLOWERS AND BOLTS FROM CONCRETE WITH TEMPORARY FORMS AND POLYETHYLENE SHEETING - SEE NOTE 5.
7. ANY FIELD MIXING OF CONCRETE SHALL BE APPROVED BY WATER OPERATIONS.

Beaverton Engineering	THRUST BLOCKS	SCALE: NONE DATE: JUNE 2018	630-9

FILENAME: 630-9.dwg

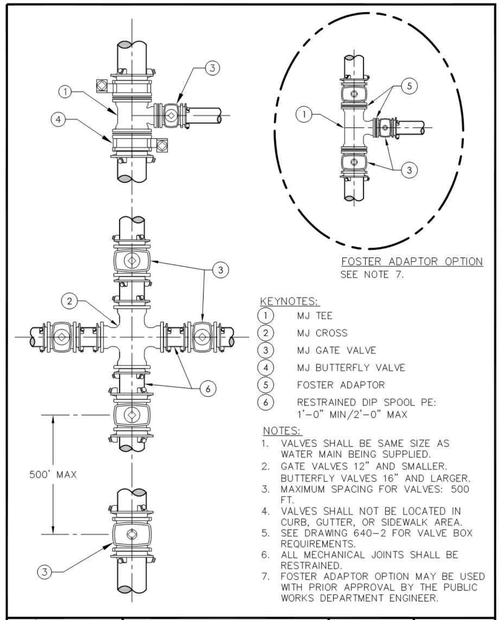

KEYNOTES:
1. MJ TEE
2. MJ CROSS
3. MJ GATE VALVE
4. MJ BUTTERFLY VALVE
5. FOSTER ADAPTOR
6. RESTRAINED DIP SPOOL PE: 1'-0" MIN/2'-0" MAX

NOTES:
1. VALVES SHALL BE SAME SIZE AS WATER MAIN BEING SUPPLIED.
2. GATE VALVES 12" AND SMALLER. BUTTERFLY VALVES 16" AND LARGER.
3. MAXIMUM SPACING FOR VALVES: 500 FT.
4. VALVES SHALL NOT BE LOCATED IN CURB, GUTTER, OR SIDEWALK AREA.
5. SEE DRAWING 640-2 FOR VALVE BOX REQUIREMENTS.
6. ALL MECHANICAL JOINTS SHALL BE RESTRAINED.
7. FOSTER ADAPTOR OPTION MAY BE USED WITH PRIOR APPROVAL BY THE PUBLIC WORKS DEPARTMENT ENGINEER.

Beaverton Engineering	TYPICAL WATER VALVE LOCATION	SCALE: NONE DATE: JUNE 2018	640-1

FILENAME: 640-1.dwg

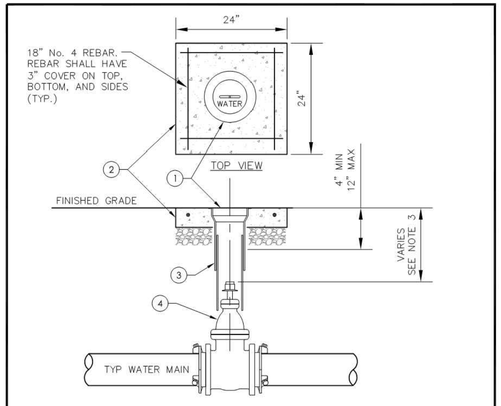

KEYNOTES :
1. OLYMPIC FOUNDRY VB910 VALVE BOX & COVER WITH "WATER" CAST IN THE TOP SURFACE.
2. UNPAVED AREAS ONLY: PROVIDE 24" SQUARE BY 5½" THICK CONCRETE PAD CENTERED ON VALVE BOX. INSTALL OVER 4" COMPACTED ¾"-0" CRUSHED ROCK.
3. 6" SCH 40 OR D3034 PVC PIPE RISER WITH END CUT TO FIT OVER VALVE HOUSING, LENGTH AS NECESSARY.
4. MJ GATE VALVE (BUTTERFLY VALVE SIMILAR, NOT SHOWN)

NOTES :
1. CENTER VALVE BOX ON AXIS OF OPERATING NUT AND SET PLUMB WITH FINISHED GRADE.
2. OPERATOR EXTENSION REQUIRED WHEN VALVE NUT IS DEEPER THAN 6 FEET FROM FINISHED GRADE. REFER TO DRAWING 640-4

Beaverton Engineering	TYPICAL STANDARD VALVE BOX SETTING	SCALE: NONE DATE: JUNE 2018	640-2

FILENAME: 640-2.dwg

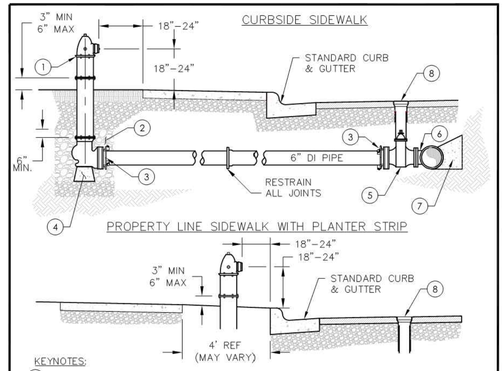

KEYNOTES:
1. APPROVED FIRE HYDRANT ASSEMBLY PER MANUFACTURER'S SPECIFICATIONS WITH STORZ HPHA50-45NH PERMANENT HYDRANT ADAPTER ON THE 4½" PORT.
2. DRAIN ROCK, 4 CU. FT. MINIMUM
3. TYPICAL 6" MEGALUG RETAINER OR EQUAL AT EACH PIPE FITTING
4. 12"x12"x8" CONCRETE PIER BLOCK PLACED ON UNDISTURBED NATIVE SOIL
5. 6" MJxMJ GATE VALVE.
6. WATER MAIN SIZE MJ x 6" MJ TAPPING SLEEVE, SEE DRAWING 630-2, SEE NOTE 4
7. CONCRETE THRUST BLOCK, SEE DRAWING 630-9
8. VALVE BOX, SEE DRAWING 640-2

NOTES:
1. REFER TO DRAWING 650-1 FOR HYDRANT CLEAR ZONE REQUIREMENTS
2. HYDRANT BURY DEPTH - 30" MIN., 6' MAX.
3. WHEN FINAL LIFT OF HMAC IS PLACED, CONTRACTOR TO SET A BLUE REFLECTOR BUTTON FOR THE FIRE DEPARTMENT. SEE DRAWING 650-4 FOR PLACEMENT
4. USE MJ OR FLG VALVE & TEE AS NEEDED TO PLACE VALVE BOX OUTSIDE OF WHEEL PATH.

Beaverton Engineering	FIRE HYDRANT ASSEMBLY INSTALLATION	SCALE: NONE DATE: JUNE 2018	650-2

FILENAME: 650-2.dwg

UTILITY DETAILS
ACMA
BEAVERTON SCHOOL DISTRICT

C5.7
74-18109-00
03/14/19
REVISIONS

DLR Group
Architecture Planning Interiors

© 2018, DLR Group Architecture & Planning Inc., an Oregon corporation, ALL RIGHTS RESERVED

Harper Houf Peterson Righellis Inc.
ENGINEERS • PLANNERS
LANDSCAPE ARCHITECTS • SURVEYORS
205 SE Spokane Street, Suite 200, Portland, OR 97202
phone: 503.221.1131 www.hhpr.com fax: 503.221.1171

BID/PERMIT SET

CONDITIONAL USE NUMBER: CU2018-0016
DESIGN REVIEW NUMBER: DR2018-0114
SITE DEVELOPMENT PERMIT NUMBER: TBD
BUILDING PERMIT NUMBER: TBD

REGISTERED PROFESSIONAL ENGINEER 59,971 OREGON JANUARY 11, 2005 JANELLE LYNN BRANNAN
EXPIRES: 12/31/2019

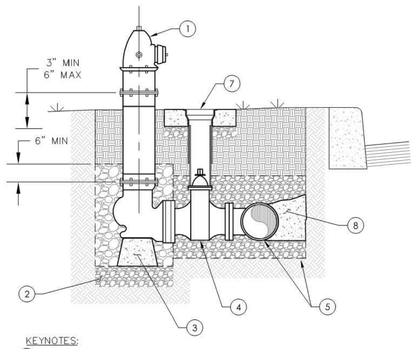

KEYNOTES:
1. APPROVED FIRE HYDRANT ASSEMBLY PER MANUFACTURER'S SPECIFICATIONS.
2. DRAIN ROCK, 4 CF MINIMUM
3. 12"x12"x8" CONCRETE PIER BLOCK PLACED ON UNDISTURBED NATIVE SOIL
4. 6" FLGxFLG GATE VALVE
5. WATER MAIN SIZE MJ x 6" FLG TEE OR TAPPING SLEEVE & BACKFILL, SEE DRAWING 630-2
6. VALVE BOX SETTING, SEE DRAWING 640-2
7. REFER TO TRENCH BACKFILL DRAWING 620-1
8. GRANULAR BACKFILL.

NOTES:
1. REFER TO DRAWING 650-1 FOR HYDRANT CLEAR ZONE REQUIREMENTS.
2. HYDRANT BURY DEPTH: 30" MINIMUM, 6 FT MAXIMUM.
3. FLANGE HYDRANT USE IS DEPENDENT ON SPACE CONSTRAINTS AND REQUIRES WATER DEPARTMENT APPROVAL.
4. WHEN FINAL LIFT OF HMAC IS PLACED, CONTRACTOR TO PLACE A BLUE REFLECTOR BUTTON FOR THE FIRE DEPARTMENT. SEE DRAWING 650-4 FOR PLACEMENT

Beaverton Engineering	FIRE HYDRANT ASSEMBLY FLANGE JOINT INSTALLATION	SCALE: NONE	DATE: JUNE 2018	650-3

FILENAME: 650-3.dwg

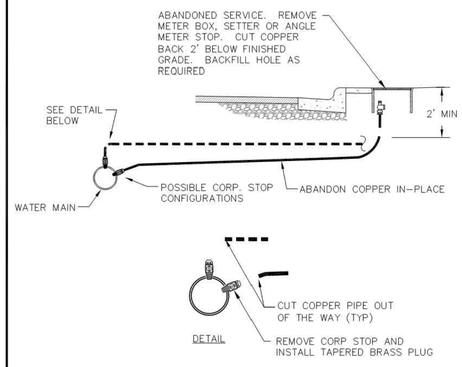

NOTE:
1. EXCAVATE A HOLE LARGE ENOUGH TO ACCESS CORP
2. TURN CORP OFF
3. SEVER COPPER AWAY FROM CORP STOP
4. REMOVE CORP STOP FROM MAIN AND INSTALL TAPERED BRASS PLUG
5. BACKFILL WITH 3/4 MINUS GRANULAR ROCK, FULL TRENCH DEPTH
6. ABANDONMENT TO BE DONE WITH THE WATER DEPT. INSPECTOR PRESENT

Beaverton Engineering	SERVICE ABANDONMENT	SCALE: NONE	DATE: JUNE 2018	660-1

FILENAME: 660-1.dwg

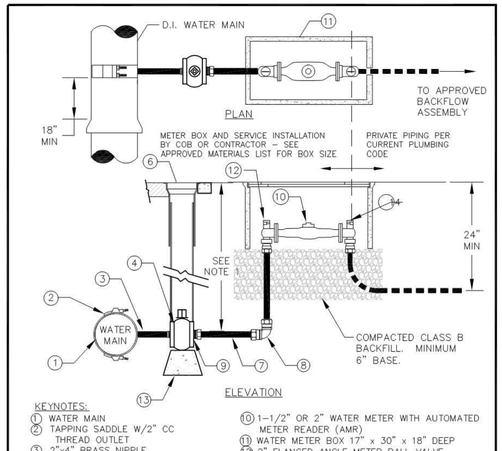

KEYNOTES:
1. WATER MAIN
2. TAPPING SADDLE W/2" CC THREAD OUTLET
3. 2"x4" BRASS NIPPLE
4. 2" GATE VALVE w/2" OPERATING NUT FIPT x FIPT
5. (2) 2" BRASS STREET ELLS
6. VALVE BOX PER 540-2
7. 2" TYPE K RIGID COPPER PIPE
8. 2" CTS x CTS 90° ELL
9. USE 2" CTS x MIPT COUPLING
10. 1-1/2" OR 2" WATER METER WITH AUTOMATED METER READER (AMR)
11. WATER METER BOX 17" x 30" x 18" DEEP
12. 2" FLANGED ANGLE METER BALL VALVE W/2" CTS INLET
13. 8"x8"x8" CONC. PIER BLOCK OR EQUIVALENT SUPPORT ON UNDISTURBED EARTH
14. 2" FLANGED ANGLE METER BALL VALVE W/2" FIPT OUTLET (CITY TO INSTALL WHEN METER IS PLACED)

NOTES:
1. SERVICE LINES BETWEEN THE WATER MAIN AND THE METER SHALL HAVE 30" OF COVER FOR IMPROVED AREAS AND 42" OF COVER FOR UNIMPROVED AREAS.
2. ALL FITTINGS SHOWN SHALL BE BRASS OR COPPER.
3. WATER OPERATIONS WILL INSTALL METER AFTER WATER MAIN HAS BEEN APPROVED FOR PUBLIC USE, REQUIRED FEES HAVE BEEN PAID, AND ALL BACKFLOW PREVENTION REQUIREMENTS HAVE BEEN MET.
4. ALL SERVICE LINES SHALL BE INSTALLED PRIOR TO PRESSURE TESTING.

Beaverton Engineering	1½" AND 2" IRRIGATION SERVICE CONNECTION	SCALE: NONE	DATE: JUNE 2018	660-4

FILENAME: 660-4.dwg

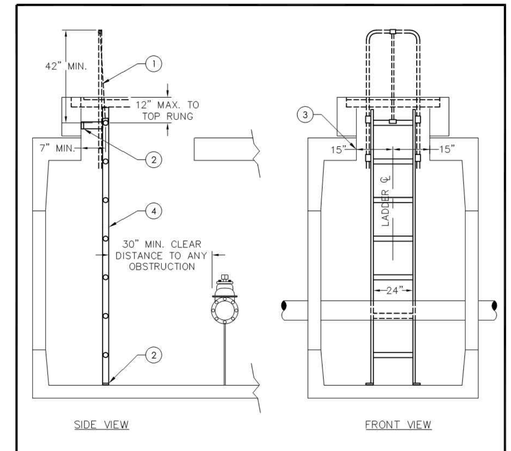

KEYNOTES:
1. LADDER EXTENSION SHALL BE ALUMINUM AND EXTEND 42" ABOVE THE TOP RUNG OF THE LADDER. EXTENSION SHALL BE BOLTED UP BEHIND LADDER RUNGS
2. ATTACH LADDER SUPPORT TO INSIDE FACE OF VAULT OPENING AND FLOOR OF VAULT WITH STAINLESS STEEL HARDWARE AS SHOWN. ℄ OF RUNG MUST BE SET 7" FROM FACE OF SURFACE BEHIND RUNG.
3. PROVIDE 15" MINIMUM LATERAL CLEARANCE ON EACH SIDE OF LADDER ℄
4. LADDER SHALL MEET THE REQUIREMENT OF OSHA AND SHALL BE HOT-DIPPED GALVANIZED AFTER FABRICATION

Beaverton Engineering	VAULT LADDER INSTALLATION	SCALE: NONE	DATE: JUNE 2018	670-1

FILENAME: 670-1.dwg

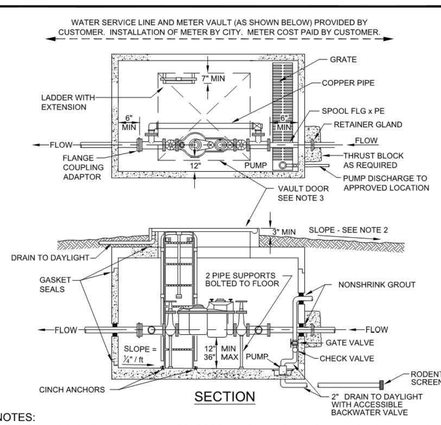

NOTES:
1. This is a public facility, governed by *UPC, SOPC* and *Oregon Dept. of Human Services*,as applicable.
2. Finished grade shall slope away from the vault cover to prevent ponding around the cover.
3. Vault door mechanisms shall not project below the ceiling of the vault interior.
4. Aluminum ladder with extension to be *O.S.H.A.* approved, (*Utility Vault Co.* 1672 or equal). Ladder to have clear access from vault door.
5. Seal pipe penetrations with nonshrink grout to achieve a water tight seal. Piping shall not be directly imbedded in concrete or masonry. Provide pipe straps for thrust resistance per *State of Oregon Plumbing Code (SOPC).*
6. Check valve to be union style (compression) or install union with check valve.
7. Slope interior toward end of floor for sump or gravity drain outlet. Trim floor drain grating as required for pump installation. For alternate floor center drain, see *Drawing 690-4A.*

METER SIZE	UTILITY VAULT CO. VAULT MODEL NO.	BILCO - VAULT DOOR MODEL NO.
3"	676-WA	J-5AL
4" & 6"	687-WA	J-5AL
8"	810-LA	JD-3AL

Beaverton Engineering	COMPOUND WATER METER VAULT	SCALE: NONE	DATE: JUNE 2018	670-3

FILENAME: 670-3.dwg

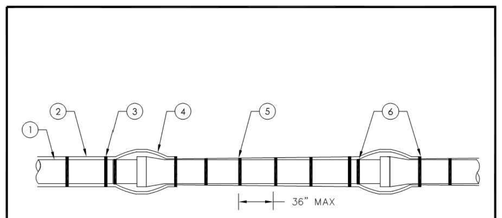

KEYNOTES:
1. TYPICAL DUCTILE IRON PIPE W/ PUSH-ON JOINT (SHOWN)
2. CROSS-LAMINATED POLYETHYLENE ENCASEMENT TUBE PER SPECIFICATIONS.
3. TYPICAL PVC OR POLYETHYLENE ADHESIVE TAPE OR PLASTIC TIE STRAPS
4. LONGITUDINAL OVERLAP POLYETHYLENE TUBE, 1 FT MINIMUM AT EACH PIPE JOINT
5. FOLD EXCESS TUBE MATERIAL SNUG AGAINST PIPE AND SECURE IN PLACE
6. SECURE EACH END OF POLYETHYLENE TUBE

NOTES:
1. INSTALL POLYETHYLENE TUBE IN ACCORDANCE WITH ANSI/WWA C105/A21.5 METHOD A
2. CLEAN PIPE SURFACE OF CLAY, MUD, DEBRIS, ETC. BEFORE INSTALLING POLYETHYLENE ENCASEMENT
3. PROTECT POLYETHYLENE-ENCASE PIPE WHEN LIFTING OR HANDLING
4. REPAIR ALL SMALL RIPS, TEARS, OR OTHER DAMAGE TO POLYETHYLENE TUBE WITH PVC OR POLYETHYLENE ADHESIVE TAPE, OR COVER THE DAMAGED AREA WITH A FULL CIRCUMFERENCE WRAP OF POLYETHYLENE SHEET AND SEAL THE EDGES WITH ADHESIVE TAPE
5. AVOID DAMAGE TO POLYETHYLENE DURING BACKFILLING AND COMPACTION WORK
6. PROVIDE UNDERLAYER OF 40 MIL GEOMEMBRANE AT JOINT TYPES OTHER THAN PUSH-ON JOINTS.

Beaverton Engineering	POLYETHYLENE ENCASEMENT FOR DIP	SCALE: NONE	DATE: JUNE 2018	680-3

FILENAME: 680-3.dwg

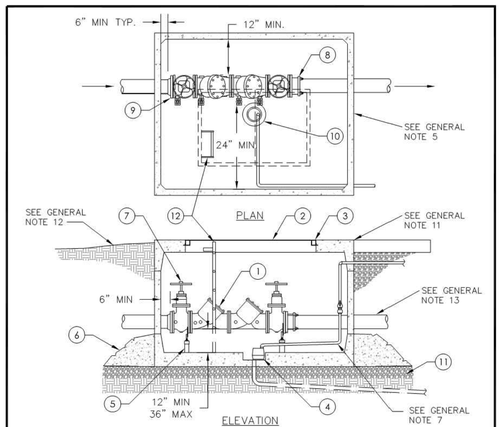

KEYNOTES:
1. APPROVED DOUBLE CHECK (DC) ASSEMBLY PER STANDARDS
2. CONCRETE VAULT WITH ACCESS HATCH DOORS
3. TYPICAL VAULT DOOR
4. SUMP PUMP INCLUDING 1-1/2" PVC DISCHARGE PIPING WITH CHECK VALVE, OR 4" PVC GRAVITY DRAIN WITH BACKWATER VALVE TO STORM SEWER. SEE BUILDING DEPT FOR REQUIRED PERMITS.
5. TYPICAL PIPE SUPPORTS – SEE NOTE 10, DRAWING 690-4B
6. TYPICAL CONCRETE BALLAST – SEE NOTE 8, DRAWING 690-4B
7. TYPICAL NON-RISING STEM (N.R.S.) GATE VALVES
8. FLANGE COUPLING ADAPTER
9. ADAPTER FLANGE
10. 12" DIA SUMP WITH PUMP OR GRAVITY DRAIN
11. COMPACTED CLASS B BACKFILL BASE 6" MINIMUM
12. OSHA-APPROVED LADDER – SEE DRAWING 670-1

Beaverton Engineering	3" AND LARGER DOUBLE CHECK VALVE ASSEMBLY (DC)	SCALE: NONE	DATE: JUNE 2018	690-4A

FILENAME: 690-4A.dwg

VAULT INFORMATION		
DCVA SIZE	OLDCASTLE VAULT NO.	DOOR MODEL NO.
3"	577-LA	57-T-2-332P
4"	577-LA	57-T-2-332P
6"	676-WA	676-T-2-332P
8"	687-WA	687-T-2-332P
10"	5106-WA	5106-3-T-2-332P
OR APPROVED EQUAL		

GENERAL NOTES:
1. PLACE DC ASSEMBLY WITHIN PROPERTY LINE AS CLOSE TO METER AS POSSIBLE WITH NO CONNECTIONS OR TEES BETWEEN METER AND DC.
2. THIS IS TO BE A PRIVATE FACILITY, GOVERNED BY OPSC AND OREGON HEALTH AUTHORITY, AS APPLICABLE.
3. ALL MJ JOINTS SHALL HAVE MECHANICAL JOINT RESTRAINTS.
4. CONTRACTOR TO SEAL ALL OPENINGS IN VAULT WITH NON-SHRINK GROUT OR "LINK-SEAL."
5. COAT ALL EXTERIOR VAULT SURFACES WITH CO-MA-SEAL OR APPROVED EQUAL.
6. PROVIDE POWER SOURCE AS REQUIRED FOR SUMP PUMP. SECURE POWER CORD TO DISCHARGE PIPING WITH NYLON CABLE TIES. SEE DRAWING 670-2 FOR SUMP PUMP INSTALLATION DETAILS.
7. PUMP DISCHARGE TO APPROVED LOCATION PER PLUMBING INSPECTOR.
8. IN AREAS PRONE TO HIGH GROUNDWATER POUR CONCRETE BALLAST (3 CUBIC YARDS MINIMUM); ENGINEER IS RESPONSIBLE TO ENSURE ADEQUATE BALLAST IS PROVIDED TO PREVENT FLOATING OF VAULT.
9. VAULT DOOR MECHANISMS SHALL NOT PROTRUDE BELOW THE CEILING OF THE VAULT INTERIOR.
10. ASSEMBLY IS TO BE SUPPORTED BY A SUBSTANTIAL RUST-RESISTANT PRODUCT SUCH AS "STANDON" OR APPROVED EQUAL TO PREVENT UNDUE STRESS OR STRAIN ON THE ASSEMBLY AND PIPING.
11. VAULT TOP SHALL BE SET LEVEL WITH ADJACENT HARD SURFACE (CONCRETE OR AC PAVEMENT).
12. FOR INSTALLATION IN LANDSCAPE AREA, PLACE VAULT TOP 3"-5" ABOVE GROUND SURFACE AND SLOPE GROUND AWAY AT ¼" PER FOOT TYPICAL. DO NOT BURY HATCH DRAIN.
13. EXTEND DUCTILE IRON PIPE 5' MINIMUM OUT OF VAULT TO PROTECT FROM BREAKING DUE TO VAULT SETTLEMENT.
14. SEE DRAWING 690-4A FOR PLAN AND ELEVATION VIEWS.
15. CONSULT WITH BUILDING DEPARTMENT FOR PROPER SIZING OF DC.
16. WHEN LOCATED IN PEDESTRIAN WALKWAY A NON-SLIP LID AND GROUTED PICK HOLES ARE REQUIRED.

Beaverton Engineering	3" AND LARGER DOUBLE CHECK VALVE ASSEMBLY (DETAIL NOTES)	SCALE: NONE	DATE: JUNE 2018	690-4B

FILENAME: 690-4B.dwg

UTILITY DETAILS
ACMA
BEAVERTON SCHOOL DISTRICT

C5.8
74-18109-00
03/14/19
REVISIONS

DLR Group
Architecture Planning Interiors

© 2018, DLR Group Architecture & Planning Inc., an Oregon corporation. ALL RIGHTS RESERVED

Harper
Houf **P**eterson
Righellis **I**nc.
ENGINEERS•PLANNERS
LANDSCAPE ARCHITECTS • SURVEYORS
205 SE Spokane Street, Suite 200, Portland, OR 97202
phone: 503.221.1131 www.hhpr.com fax: 503.221.1171

BID/PERMIT SET

CONDITIONAL USE NUMBER: CU2018-0016
DESIGN REVIEW NUMBER: DR2018-0114
SITE DEVELOPMENT PERMIT NUMBER: TBD
BUILDING PERMIT NUMBER: TBD

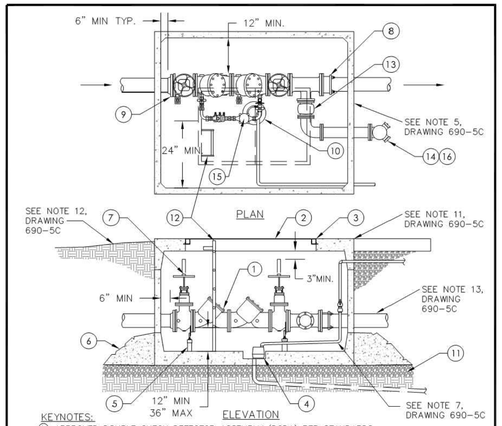

KEYNOTES:
1. APPROVED DOUBLE CHECK DETECTOR ASSEMBLY (DCDA) PER STANDARDS
2. CONCRETE VAULT WITH ACCESS HATCH DOORS
3. TYPICAL VAULT DOOR
4. SUMP PUMP INCLUDING 1 ½" PVC DISCHARGE PIPING WITH CHECK VALVE, OR 4" PVC GRAVITY DRAIN WITH BACKWATER VALVE TO STORM SEWER
5. TYPICAL PIPE SUPPORTS, SEE NOTE 10, DRAWING 690-5C
6. TYPICAL CONCRETE BALLAST – SEE NOTE 8, DRAWING 690-5C
7. TYPICAL OS&Y GATE VALVES FOR DCDA, 3" MINIMUM CLEARANCE IN OPEN POSITION
8. FLANGE COUPLING ADAPTER
9. ADAPTER FLANGE
10. 12" DIA SUMP WITH PUMP OR GRAVITY DRAIN
11. COMPACTED CLASS B BACKFILL BASE 6" MINIMUM
12. OSHA-APPROVED LADDER – SEE DRAWING 670-1
13. CHECK VALVE WITH BALL DRIP VALVE PER NFPA 13 AND NFPA 24 STANDARDS
14. F.D.C. PER OREGON FIRE CODE, OREGON STRUCTURAL SPECIALTY CODE, NFPA 13, 13R, 14 & 24 STANDARDS. LOCATION AS APPROVED BY THE FIRE CODE OFFICIAL.
15. DETECTOR METER – SEE NOTE 15, DRAWING 690-5C
16. F.D.C. SHALL BE PROVIDED WITH LOCKING FDC PLUGS.

Beaverton ENGINEERING	3" AND LARGER DOUBLE CHECK DETECTOR ASSEMBLY	SCALE: NONE DATE: JUNE 2018	690-5A

FILENAME: 690-5A.dwg

VAULT INFORMATION		
DCVA SIZE	OLDCASTLE VAULT NO.	DOOR MODEL NO.
4"	676-WA	676-T-2-332P
6"	687-WA	687-T-2-332P
8"	5106-WA	5106-3-T-2-332P
10"	5106-WA	5106-3-T-2-332P
OR APPROVED EQUAL		

GENERAL NOTES:

1. CONSULT WITH FIRE DEPARTMENT FOR SIZING OF DCDA.
2. THIS IS TO BE A PRIVATE FACILITY, GOVERNED BY OPSC, NFPA, OREGON HEALTH AUTHORITY, AND HILLSBORO FIRE MARSHAL, AS APPLICABLE.
3. ALL MJ JOINTS SHALL HAVE MECHANICAL JOINT RESTRAINTS.
4. CONTRACTOR TO SEAL ALL OPENINGS IN VAULT WITH NON-SHRINK GROUT OR "LINK-SEAL."
5. COAT ALL EXTERIOR VAULT SURFACES WITH CO-MA-SEAL, OR APPROVED EQUAL.
6. PROVIDE POWER SOURCE AS REQUIRED FOR SUMP PUMP. SECURE POWER CORD TO DISCHARGE PIPING WITH NYLON CABLE TIES. SEE DRAWING 670-2 FOR SUMP PUMP INSTALLATION DETAILS.
7. PLUMB PUMP DISCHARGE TO APPROVED LOCATION PER PLUMBING INSPECTOR.
8. IN AREAS PRONE TO HIGH GROUNDWATER POUR CONCRETE BALLAST (3 CUBIC YARDS MINIMUM); ENGINEER IS RESPONSIBLE TO ENSURE ADEQUATE BALLAST IS PROVIDED TO PREVENT FLOATING OF VAULT.
9. VAULT DOOR MECHANISMS SHALL NOT PROTRUDE BELOW THE CEILING OF THE VAULT INTERIOR.
10. ASSEMBLY IS TO BE SUPPORTED BY A SUBSTANTIAL RUST-RESISTANT PRODUCT SUCH AS "STANDON" OR APPROVED EQUAL TO PREVENT UNDUE STRESS OR STRAIN ON THE ASSEMBLY AND PIPING.
11. VAULT TOP SHALL BE SET LEVEL WITH ADJACENT HARD SURFACE (CONCRETE OR AC PAVEMENT).
12. FOR INSTALLATION IN LANDSCAPE AREA, PLACE VAULT TOP 3"-5" ABOVE GROUND SURFACE AND SLOPE GROUND AWAY AT ¼" PER FOOT TYPICAL. DO NOT BURY HATCH DRAIN.
13. EXTEND DUCTILE IRON PIPE 5' MINIMUM OUT OF VAULT TO PROTECT FROM BREAKING DUE TO VAULT SETTLEMENT.
14. SEE DRAWING 690-5A FOR PLAN AND ELEVATION VIEWS. TYPICAL LAYOUT SHOWN, MAY BE INSTALLED IN OPPOSITE CONFIGURATION TO CONFORM TO SITE CONDITION REQUIREMENTS.
15. DETECTOR METER SHALL BE MART & COMPATIBLE WITH SENSUS MX4.
16. WHEN LOCATED IN PEDESTRIAN WALKWAY A NON-SLIP LID AND GROUTED PICK HOLES ARE REQUIRED.

Beaverton ENGINEERING	3" AND LARGER DOUBLE CHECK DETECTOR ASSEMBLY (DETAIL NOTES)	SCALE: NONE DATE: JUNE 2018	690-5C

FILENAME: 690-5C.dwg

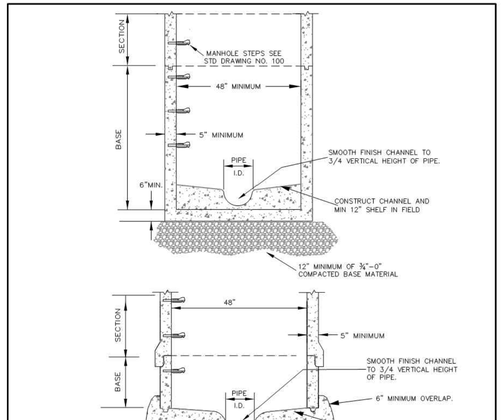

NOTES:
1. ALL MANHOLE SECTIONS SHALL CONFORM TO THE REQUIREMENTS OF ASTM C-478 AND APPLICABLE PROVISIONS OF STANDARD MANHOLE, DRAWING NO. 010.
2. ALL POURED IN PLACE CONCRETE SHALL HAVE A 28 DAY STRENGTH OF 3000 PSI AND A SLUMP OF 2" TO 4".

MANHOLE BASE	CleanWater Services
DRAWING NO. 020 REVISED 11-16	

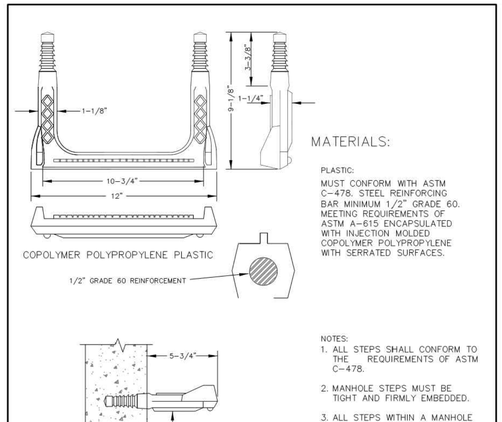

MATERIALS:

PLASTIC:
MUST CONFORM WITH ASTM C-478. STEEL REINFORCING BAR MINIMUM 1/2" GRADE 60. MEETING REQUIREMENTS OF ASTM A-615 ENCAPSULATED WITH INJECTION MOLDED COPOLYMER POLYPROPYLENE WITH SERRATED SURFACES.

NOTES:
1. ALL STEPS SHALL CONFORM TO THE REQUIREMENTS OF ASTM C-478.
2. MANHOLE STEPS MUST BE TIGHT AND FIRMLY EMBEDDED.
3. ALL STEPS WITHIN A MANHOLE SHALL BE OF THE SAME DESIGN, TYPE, AND SIZE. (MIXING OF UNMATCHED STEPS IS NOT PERMITTED).
4. STEPS ADJUSTED OR ADDED SHALL BE EPOXIED IN HOLES THAT ARE FREE OF MOISTURE AND DEBRIS. (EPOXY TO MEET ASTM C881).

MANHOLE STEP	CleanWater Services
DRAWING NO. 100 REVISED 12-16	

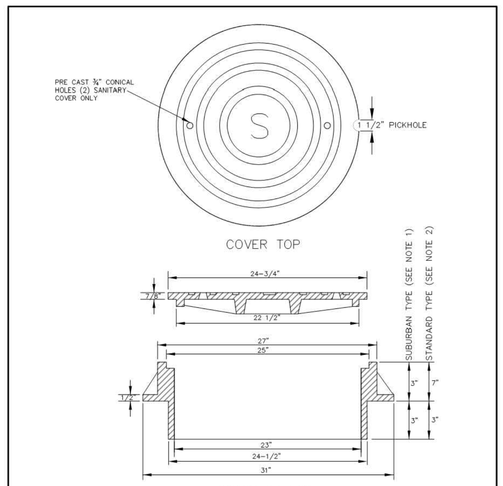

NOTES:
1. SUBURBAN TYPE FOR USE IN TRAFFIC AREAS OF LOCAL AND NEIGHBORHOOD STREETS.
2. STANDARD TYPE FOR USE IN TRAFFIC AREAS OF COLLECTOR AND ARTERIAL STREETS.
3. COVER AND FRAME SHALL BE GRAY CAST IRON ASTM A-48 CLASS 30.
4. COVER AND FRAME TO BE MACHINED TO A TRUE BEARING ALL AROUND.
5. 1 1/2" PICKHOLE IN LID FOR LIFTING HOOK.

SUBURBAN AND STANDARD MANHOLE FRAME AND COVER SANITARY	CleanWater Services
DRAWING NO. 110 REVISED 02-17	

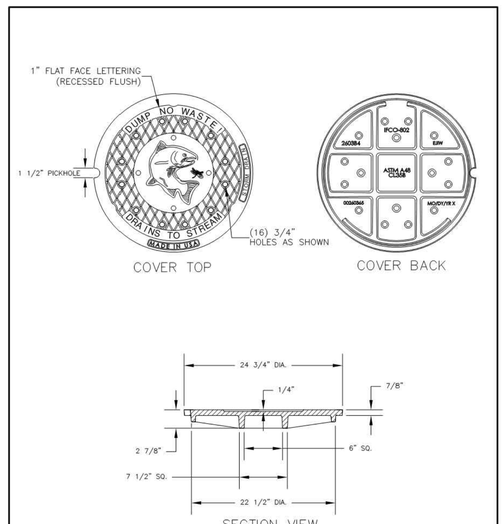

SEE DETAIL #110 FOR MANHOLE FRAME SPECIFICATIONS.

STORM WATER MANHOLE LID	CleanWater Services
DRAWING NO. 120 REVISED 12-06	

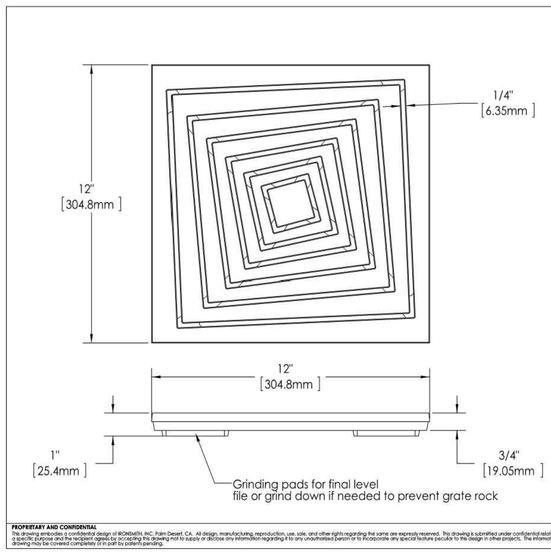

9090DR-12
Vertigo
12" Drain Grate

Drain Grate for Pedestrian loads only.

1/4" maximum slot opening for A.D.A. compliance and pedestrian safety.

Cast from Gray Iron, or Aluminum from 100% Recycled Materials. Or Brass alloy C854 yellow brass

Finish: Unfinished, or Black Dip, or Enamel Paint, or Polyurethane Paint, or Powder Coat. Zinc undercoat available.

Specify finish and color.

Use Frame Model: 9000FDR-12

Clear opening: 35 sq.in.

Weight per Each
Iron: 16lb./7.3Kg
Aluminum: 6lb/2.7Kg
Brass: 19lb./8.6Kg

DO NOT SCALE DRAWING

IRONSMITH
41-701 Corporate Way #3
Palm Desert, CA 92260
(800) 338-4766
(760) 776-5080 Fax

PROPRIETARY AND CONFIDENTIAL
This drawing embodies a confidential design of IRONSMITH, INC. Palm Desert, CA. All design, manufacturing, reproduction, use, sale, and other rights regarding the same are expressly reserved. This drawing is submitted under confidential relationships for a specific purpose and the recipient agrees by accepting this drawing not to supply or disclose any information regarding it to any unauthorized person or to incorporate any special feature peculiar to this design in other projects. The information in this drawing may be covered completely or in part by patent pending.

REGISTERED PROFESSIONAL ENGINEER 59,971 OREGON JUNE 11, 2005 JANELLE LYNN BRANNAN
EXPIRES: 12/31/2019

UTILITY DETAILS
ACMA
BEAVERTON SCHOOL DISTRICT

C5.9
74-18109-00
03/14/19
REVISIONS

DLR Group
Architecture Planning Interiors

© 2018, DLR Group Architecture & Planning Inc., an Oregon corporation, ALL RIGHTS RESERVED

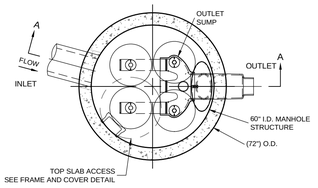

PLAN VIEW
STANDARD OUTLET RISER
FLOWKIT: 41A

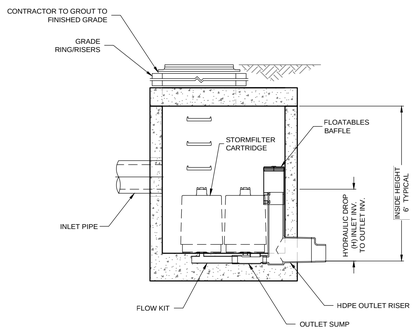

SECTION A-A

STORMFILTER DESIGN NOTES

STORMFILTER TREATMENTCAPACITY IS A FUNCTION OF THE CARTRIDGE SELECTION AND THE NUMBER OF CARTRIDGES. THE STANDARD MANHOLE STYLE IS SHOWN WITH THE MAXIMUM NUMBER OF CARTRIDGES (4). VOLUME SYSTEM IS ALSO AVAILABLE WITH MAXIMUM 4 CARTRIDGES.
Ø60" MANHOLE STORMFILTER PEAK HYDRAULIC CAPACITY IS 1.0 CFS. IF THE SITE CONDITIONS EXCEED 1.0 CFS AN UPSTREAM BYPASS STRUCTURE IS REQUIRED.

CARTRIDGE SELECTION

	27"		18"		LOW DROP	
CARTRIDGE HEIGHT	3.05'		2.3'		1.6'	
RECOMMENDED HYDRAULIC DROP (H)	2 gpm/ft²	1 gpm/ft²	2 gpm/ft²	1 gpm/ft²	2 gpm/ft²	1 gpm/ft²
SPECIFIC FLOW RATE (gpm/sf)	22.5	11.25	15	7.5	10	5
CARTRIDGE FLOW RATE (gpm)						

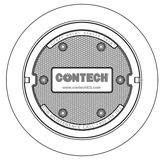

FRAME AND COVER
(DIAMETER VARIES)
N.T.S.

SITE SPECIFIC DATA REQUIREMENTS

STRUCTURE ID	SF1
WATER QUALITY FLOW RATE (cfs)	0.14
PEAK FLOW RATE (cfs)	1.45
RETURN PERIOD OF PEAK FLOW (yrs)	25
# OF CARTRIDGES REQUIRED	3
CARTRIDGE FLOW RATE	0.05 cfs
MEDIA TYPE (CSF, PERLITE, ZPG, GAC, PHS)	PERLITE

PIPE DATA:	I.E.	MATERIAL	DIAMETER
INLET PIPE #1	200.87'	PVC	12"
INLET PIPE #2	N/A	N/A	N/A
OUTLET PIPE	197.82'	PVC	12"

RIM ELEVATION	207.15'

ANTI-FLOTATION BALLAST	WIDTH	HEIGHT
	N/A	N/A

NOTES/SPECIAL REQUIREMENTS:

* PER ENGINEER OF RECORD

GENERAL NOTES
1. CONTECH TO PROVIDE ALL MATERIALS UNLESS NOTED OTHERWISE.
2. DIMENSIONS MARKED WITH ( ) ARE REFERENCE DIMENSIONS. ACTUAL DIMENSIONS MAY VARY.
3. FOR SITE SPECIFIC DRAWINGS WITH DETAILED VAULT DIMENSIONS AND WEIGHTS, PLEASE CONTACT YOUR CONTECH ENGINEERED SOLUTIONS LLC REPRESENTATIVE. www.ContechES.com
4. STORMFILTER WATER QUALITY STRUCTURE SHALL BE IN ACCORDANCE WITH ALL DESIGN DATA AND INFORMATION CONTAINED IN THIS DRAWING.
5. STRUCTURE SHALL MEET AASHTO HS20 LOAD RATING, ASSUMING EARTH COVER OF 0' - 5' AND GROUNDWATER ELEVATION AT, OR BELOW, THE OUTLET PIPE INVERT ELEVATION. ENGINEER OF RECORD TO CONFIRM ACTUAL GROUNDWATER ELEVATION. CASTINGS SHALL MEET AASHTO M306 AND BE CAST WITH THE CONTECH LOGO.
6. FILTER CARTRIDGES SHALL BE MEDIA-FILLED, PASSIVE, SIPHON ACTUATED, RADIAL FLOW, AND SELF CLEANING. RADIAL MEDIA DEPTH SHALL BE 7-INCHES. FILTER MEDIA CONTACT TIME SHALL BE AT LEAST 39 SECONDS.
7. SPECIFIC FLOW RATE IS EQUAL TO THE FILTER TREATMENT CAPACITY (gpm) DIVIDED BY THE FILTER CONTACT SURFACE AREA (sq ft).

INSTALLATION NOTES
1. ANY SUB-BASE, BACKFILL DEPTH, AND/OR ANTI-FLOTATION PROVISIONS ARE SITE-SPECIFIC DESIGN CONSIDERATIONS AND SHALL BE SPECIFIED BY ENGINEER OF RECORD.
2. CONTRACTOR TO PROVIDE EQUIPMENT WITH SUFFICIENT LIFTING AND REACH CAPACITY TO LIFT AND SET THE STORMFILTER STRUCTURE (LIFTING CLUTCHES PROVIDED).
3. CONTRACTOR TO INSTALL JOINT SEALANT BETWEEN ALL STRUCTURE SECTIONS AND ASSEMBLE STRUCTURE.
4. CONTRACTOR TO PROVIDE, INSTALL, AND GROUT INLET PIPE(S).
5. CONTRACTOR TO PROVIDE AND INSTALL CONNECTOR TO THE OUTLET RISER STUB. STORMFILTER EQUIPPED WITH A DUAL DIAMETER HDPE OUTLET STUB AND SAND COLLAR. IF OUTLET PIPE IS LARGER THAN 8 INCHES, CONTRACTOR TO REMOVE THE 8 INCH OUTLET STUB AT MOLDED IN CUT LINE. COUPLING BY FERNCO OR EQUAL AND PROVIDED BY CONTRACTOR.
6. CONTRACTOR TO TAKE APPROPRIATE MEASURES TO PROTECT CARTRIDGES FROM CONSTRUCTION-RELATED EROSION RUNOFF.

CONTECH ENGINEERED SOLUTIONS LLC
www.ContechES.com
9025 Centre Pointe Dr., Suite 400, West Chester, OH 45069
800-338-1122 513-645-7000 513-645-7993 FAX

SFMH60
STORMFILTER
STANDARD DETAIL

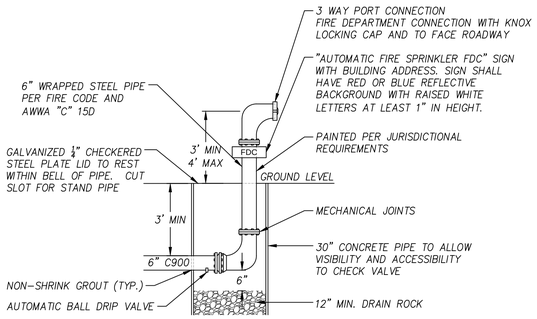

FIRE DEPARTMENT CONNECTION (FDC)
N.T.S.

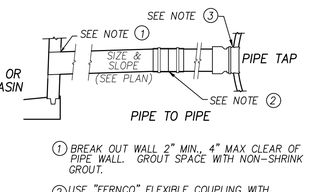

1. BREAK OUT WALL 2" MIN., 4" MAX CLEAR OF PIPE WALL. GROUT SPACE WITH NON-SHRINK GROUT.
2. USE "FERNCO" FLEXIBLE COUPLING WITH STAINLESS STEEL CLAMPS OR APPROVED EQUAL
3. CUT HOLE INTO PIPE AND INSTALL "FOWLER" SEWER BOOT TAP (OR APPROVED EQUAL).

PIPE CONNECTION DETAIL
N.T.S.

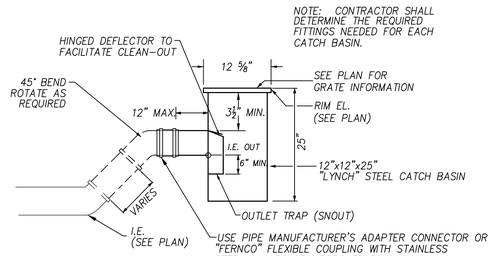

STEEL CATCH BASIN
N.T.S.

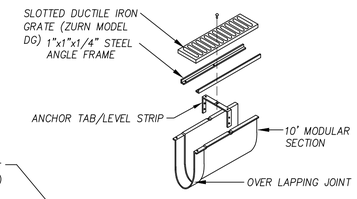

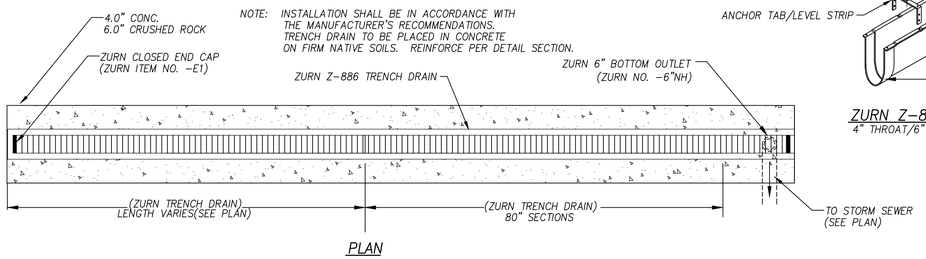

PLAN

ZURN Z-886 SECTION
4" THROAT/6" OVERALL WIDTH

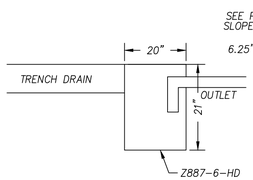

SUMP SECTION OUTLET

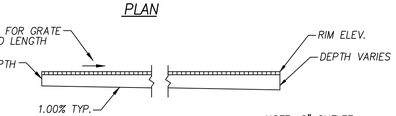

PROFILE

NOTE: 6" OUTLET UNLESS OTHERWISE NOTED ON PLAN

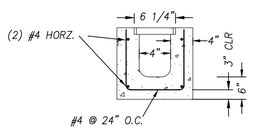

CONCRETE REINFORCEMENT

ROADWAY TRENCH DRAIN DETAIL
N.T.S.

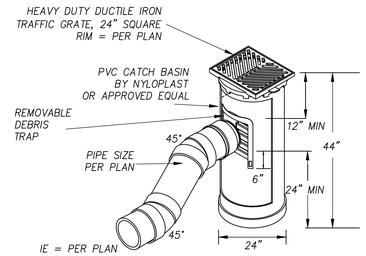

NOTES:
1. TRAP TO BE REMOVABLE TO ALLOW FOR FULL ACCESS TO OUTLET PIPE.
2. FRAMES, GRATES, HOODS, & BASE PLATES SHALL BE DUCTILE IRON PER ASTM A536 GRADE 70-50-05
3. THE BACKFILL MATERIAL SHALL BE CRUSHED STONE OR OTHER GRANULAR MATERIAL MEETING THE REQUIREMENTS OF CLASS II MATERIAL AS DEFINED IN ASTM D2321. BEDDING & BACKFILL FOR SURFACE DRAINAGE INLETS SHALL BE PLACED & COMPACTED UNIFORMLY IN ACCORDANCE WITH ASTM D2321.
4. PVC CATCH BASIN SHALL BE OREGON PLUMBING CODE, CWS & CITY OF BEAVERTON APPROVED.

TRAPPED CATCH BASIN
N.T.S.

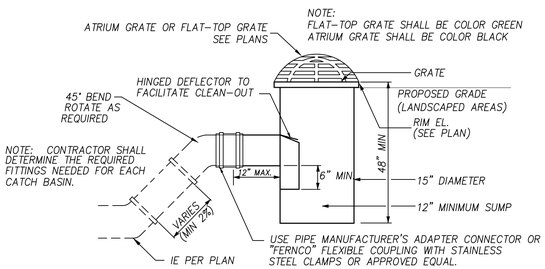

LANDSCAPE AREA DRAIN
N.T.S.

Harper Houf Peterson Righellis Inc.
ENGINEERS • PLANNERS
LANDSCAPE ARCHITECTS • SURVEYORS
205 SE Spokane Street, Suite 200, Portland, OR 97202
phone: 503.221.1131 www.hhpr.com fax: 503.221.1171

BID/PERMIT SET

CONDITIONAL USE NUMBER: CU2018-0016
DESIGN REVIEW NUMBER: DR2018-0114
SITE DEVELOPMENT PERMIT NUMBER: TBD
BUILDING PERMIT NUMBER: TBD

REGISTERED PROFESSIONAL ENGINEER
59,971
OREGON
JUNE 11, 2005
JANELLE LYNN BRAINMAN
EXPIRES: 12/31/2019

UTILITY DETAILS
ACMA
BEAVERTON SCHOOL DISTRICT

C5.10
74-18109-00
03714419
REVISIONS

DLR Group
Architecture Planning Interiors

© 2018, DLR Group Architecture & Planning Inc., an Oregon corporation. ALL RIGHTS RESERVED

PROJECT INFORMATION	
ENGINEERED PRODUCT MANAGER:	LEROY LUCERO 971-235-1569 LEROY.LUCERO@ADS-PIPE.COM
ADS SALES REP:	JOSEPH COTTON 360-601-2790 JOSEPH.COTTON@ADS-PIPE.COM
PROJECT NO:	S124306

ADVANCED DRAINAGE SYSTEMS, INC.

SiteASSIST by StormTech FOR STORMTECH INSTRUCTIONS, DOWNLOAD THE INSTALLATION APP

ACMA - BEAVERTON SCHOOL

BEAVERTON, OR

MC-4500 STORMTECH CHAMBER SPECIFICATIONS

1. CHAMBERS SHALL BE STORMTECH MC-4500.
2. CHAMBERS SHALL BE ARCH-SHAPED AND SHALL BE MANUFACTURED FROM VIRGIN, IMPACT-MODIFIED POLYPROPYLENE COPOLYMERS.
3. CHAMBERS SHALL MEET THE REQUIREMENTS OF ASTM F2418-16a, "STANDARD SPECIFICATION FOR POLYPROPYLENE (PP) CORRUGATED WALL STORMWATER COLLECTION CHAMBERS" CHAMBER CLASSIFICATION 60x101.
4. CHAMBER ROWS SHALL PROVIDE CONTINUOUS, UNOBSTRUCTED INTERNAL SPACE WITH NO INTERNAL SUPPORTS THAT WOULD IMPEDE FLOW OR LIMIT ACCESS FOR INSPECTION.
5. THE STRUCTURAL DESIGN OF THE CHAMBERS, THE STRUCTURAL BACKFILL, AND THE INSTALLATION REQUIREMENTS SHALL ENSURE THAT THE LOAD FACTORS SPECIFIED IN THE AASHTO LRFD BRIDGE DESIGN SPECIFICATIONS, SECTION 12.12, ARE MET FOR: 1) LONG-DURATION DEAD LOADS AND 2) SHORT-DURATION LIVE LOADS, BASED ON THE AASHTO DESIGN TRUCK WITH CONSIDERATION FOR IMPACT AND MULTIPLE VEHICLE PRESENCES.
6. CHAMBERS SHALL BE DESIGNED, TESTED AND ALLOWABLE LOAD CONFIGURATIONS DETERMINED IN ACCORDANCE WITH ASTM F2787, "STANDARD PRACTICE FOR STRUCTURAL DESIGN OF THERMOPLASTIC CORRUGATED WALL STORMWATER COLLECTION CHAMBERS". LOAD CONFIGURATIONS SHALL INCLUDE: 1) INSTANTANEOUS (<1 MIN) AASHTO DESIGN TRUCK LIVE LOAD ON MINIMUM COVER 2) MAXIMUM PERMANENT (75-YR) COVER LOAD AND 3) ALLOWABLE COVER WITH PARKED (1-WEEK) AASHTO DESIGN TRUCK.
7. REQUIREMENTS FOR HANDLING AND INSTALLATION:
   - TO MAINTAIN THE WIDTH OF CHAMBERS DURING SHIPPING AND HANDLING, CHAMBERS SHALL HAVE INTEGRAL, INTERLOCKING STACKING LUGS.
   - TO ENSURE A SECURE JOINT DURING INSTALLATION AND BACKFILL, THE HEIGHT OF THE CHAMBER JOINT SHALL NOT BE LESS THAN 3".
   - TO ENSURE THE INTEGRITY OF THE ARCH SHAPE DURING INSTALLATION, a) THE ARCH STIFFNESS CONSTANT AS DEFINED IN SECTION 6.2.8 OF ASTM F2418 SHALL BE GREATER THAN OR EQUAL TO 500 LBS/IN/IN. AND b) TO RESIST CHAMBER DEFORMATION DURING INSTALLATION AT ELEVATED TEMPERATURES (ABOVE 73° F / 23° C), CHAMBERS SHALL BE PRODUCED FROM REFLECTIVE GOLD OR YELLOW COLORS.
8. ONLY CHAMBERS THAT ARE APPROVED BY THE SITE DESIGN ENGINEER WILL BE ALLOWED. UPON REQUEST BY THE SITE DESIGN ENGINEER OR OWNER, THE CHAMBER MANUFACTURER SHALL SUBMIT A STRUCTURAL EVALUATION FOR APPROVAL BEFORE DELIVERING CHAMBERS TO THE PROJECT SITE AS FOLLOWS:
   - THE STRUCTURAL EVALUATION SHALL BE SEALED BY A REGISTERED PROFESSIONAL ENGINEER.
   - THE STRUCTURAL EVALUATION SHALL DEMONSTRATE THAT THE SAFETY FACTORS ARE GREATER THAN OR EQUAL TO 1.95 FOR DEAD LOAD AND 1.75 FOR LIVE LOAD, THE MINIMUM REQUIRED BY ASTM F2787 AND BY SECTIONS 3 AND 12.12 OF THE AASHTO LRFD BRIDGE DESIGN SPECIFICATIONS FOR THERMOPLASTIC PIPE.
   - THE TEST DERIVED CREEP MODULUS AS SPECIFIED IN ASTM F2418 SHALL BE USED FOR PERMANENT DEAD LOAD DESIGN EXCEPT THAT IT SHALL BE THE 75-YEAR MODULUS USED FOR DESIGN.
9. CHAMBERS AND END CAPS SHALL BE PRODUCED AT AN ISO 9001 CERTIFIED MANUFACTURING FACILITY.

IMPORTANT - NOTES FOR THE BIDDING AND INSTALLATION OF MC-4500 CHAMBER SYSTEM

1. STORMTECH MC-4500 CHAMBERS SHALL NOT BE INSTALLED UNTIL THE MANUFACTURER'S REPRESENTATIVE HAS COMPLETED A PRE-CONSTRUCTION MEETING WITH THE INSTALLERS.
2. STORMTECH MC-4500 CHAMBERS SHALL BE INSTALLED IN ACCORDANCE WITH THE "STORMTECH MC-3500/MC-4500 CONSTRUCTION GUIDE".
3. CHAMBERS ARE NOT TO BE BACKFILLED WITH A DOZER OR EXCAVATOR SITUATED OVER THE CHAMBERS. STORMTECH RECOMMENDS 3 BACKFILL METHODS:
   - STONESHOOTER LOCATED OFF THE CHAMBER BED.
   - BACKFILL AS ROWS ARE BUILT USING AN EXCAVATOR ON THE FOUNDATION STONE OR SUBGRADE.
   - BACKFILL FROM OUTSIDE THE EXCAVATION USING A LONG BOOM HOE OR EXCAVATOR.
4. THE FOUNDATION STONE SHALL BE LEVELED AND COMPACTED PRIOR TO PLACING CHAMBERS.
5. JOINTS BETWEEN CHAMBERS SHALL BE PROPERLY SEATED PRIOR TO PLACING STONE.
6. MAINTAIN MINIMUM 9" (230 mm) SPACING BETWEEN THE CHAMBER ROWS.
7. INLET AND OUTLET MANIFOLDS MUST BE INSERTED A MINIMUM OF 12" (300 mm) INTO CHAMBER END CAPS.
8. EMBEDMENT STONE SURROUNDING CHAMBERS MUST BE A CLEAN, CRUSHED, ANGULAR STONE MEETING THE AASHTO M43 DESIGNATION OF #3 OR #4.
9. STONE SHALL BE BROUGHT UP EVENLY AROUND CHAMBERS SO AS NOT TO DISTORT THE CHAMBER SHAPE. STONE DEPTHS SHOULD NEVER DIFFER BY MORE THAN 12" (300 mm) BETWEEN ADJACENT CHAMBER ROWS.
10. STONE MUST BE PLACED ON THE TOP CENTER OF THE CHAMBER TO ANCHOR THE CHAMBERS IN PLACE AND PRESERVE ROW SPACING.
11. THE CONTRACTOR MUST REPORT ANY DISCREPANCIES WITH CHAMBER FOUNDATION MATERIAL BEARING CAPACITIES TO THE SITE DESIGN ENGINEER.
12. ADS RECOMMENDS THE USE OF "FLEXSTORM CATCH IT" INSERTS DURING CONSTRUCTION FOR ALL INLETS TO PROTECT THE SUBSURFACE STORMWATER MANAGEMENT SYSTEM FROM CONSTRUCTION SITE RUNOFF.

NOTES FOR CONSTRUCTION EQUIPMENT

1. STORMTECH MC-4500 CHAMBERS SHALL BE INSTALLED IN ACCORDANCE WITH THE "STORMTECH MC-3500/MC-4500 CONSTRUCTION GUIDE".
2. THE USE OF EQUIPMENT OVER MC-4500 CHAMBERS IS LIMITED:
   - NO EQUIPMENT IS ALLOWED ON BARE CHAMBERS.
   - NO RUBBER TIRED LOADER, DUMP TRUCK, OR EXCAVATORS ARE ALLOWED UNTIL PROPER FILL DEPTHS ARE REACHED IN ACCORDANCE WITH THE "STORMTECH MC-3500/MC-4500 CONSTRUCTION GUIDE".
   - WEIGHT LIMITS FOR CONSTRUCTION EQUIPMENT CAN BE FOUND IN THE "STORMTECH MC-3500/MC-4500 CONSTRUCTION GUIDE".
3. FULL 36" (900 mm) OF STABILIZED COVER MATERIALS OVER THE CHAMBERS IS REQUIRED FOR DUMP TRUCK TRAVEL OR DUMPING.

USE OF A DOZER TO PUSH EMBEDMENT STONE BETWEEN THE ROWS OF CHAMBERS MAY CAUSE DAMAGE TO CHAMBERS AND IS NOT AN ACCEPTABLE BACKFILL METHOD. ANY CHAMBERS DAMAGED BY USING THE "DUMP AND PUSH" METHOD ARE NOT COVERED UNDER THE STORMTECH STANDARD WARRANTY.

CONTACT STORMTECH AT 1-888-892-2694 WITH ANY QUESTIONS ON INSTALLATION REQUIREMENTS OR WEIGHT LIMITS FOR CONSTRUCTION EQUIPMENT.

©2013 ADS, INC.

CONCEPTUAL LAYOUT

20	STORMTECH MC-4500 CHAMBERS
4	STORMTECH MC-4500 END CAPS
12	STONE ABOVE (in)
9	STONE BELOW (in)
40	% STONE VOID
4091	**INSTALLED SYSTEM VOLUME (CF) (PERIMETER STONE INCLUDED)**
1010	SYSTEM AREA (ft²)
143	SYSTEM PERIMETER (ft)

CONCEPTUAL ELEVATIONS

209.04	MAXIMUM ALLOWABLE GRADE (TOP OF PAVEMENT/UNPAVED)
204.54	MINIMUM ALLOWABLE GRADE (UNPAVED WITH TRAFFIC)
204.04	MINIMUM ALLOWABLE GRADE (UNPAVED NO TRAFFIC)
204.04	MINIMUM ALLOWABLE GRADE (BASE OF FLEXIBLE PAVEMENT)
204.04	MINIMUM ALLOWABLE GRADE (TOP OF RIGID PAVEMENT)
203.04	TOP OF STONE
202.04	TOP OF MC-4500 CHAMBER
198.96	24" TOP MANIFOLD INVERT
197.23	24" ISOLATOR ROW CONNECTION INVERT
197.17	12" BOTTOM CONNECTION INVERT
197.04	BOTTOM OF MC-4500 CHAMBER
196.29	UNDERDRAIN INVERT
196.29	BOTTOM OF STONE

NOTES

- MANIFOLD SIZE TO BE DETERMINED BY SITE DESIGN ENGINEER. SEE TECH SHEET #7 FOR MANIFOLD SIZING GUIDANCE.
- DUE TO THE ADAPTATION OF THIS CHAMBER SYSTEM TO SPECIFIC SITE AND DESIGN CONSTRAINTS, IT MAY BE NECESSARY TO CUT AND COUPLE ADDITIONAL PIPE TO STANDARD MANIFOLD COMPONENTS IN THE FIELD.
- THE SITE DESIGN ENGINEER MUST REVIEW ELEVATIONS AND IF NECESSARY ADJUST GRADING TO ENSURE THE CHAMBER COVER REQUIREMENTS ARE MET.
- THIS CHAMBER SYSTEM WAS DESIGNED WITHOUT SITE-SPECIFIC INFORMATION ON SOIL CONDITIONS OR BEARING CAPACITY. THE SITE DESIGN ENGINEER IS RESPONSIBLE FOR DETERMINING THE SUITABILITY OF THE SOIL AND PROVIDING THE BEARING CAPACITY OF THE INSITU SOILS. THE BASE STONE DEPTH MAY BE INCREASED OR DECREASED ONCE THIS INFORMATION IS PROVIDED.
- THE STORMTECH SYSTEM PROPOSED HAS BEEN PROVIDED AS AN EQUIVALENT LAYOUT TO THE CURRENT DESIGN PER THE SITE DESIGN ENGINEER'S PLAN. THE VOLUME, INVERTS, AND MANIFOLD CONNECTIONS WERE SIZED TO PROVIDE AN EQUIVALENT TO THE CURRENT DESIGN PER THE SITE DESIGN ENGINEER'S PLAN & MUST BE CONFIRMED/APPROVED BY THE SITE DESIGN ENGINEER.

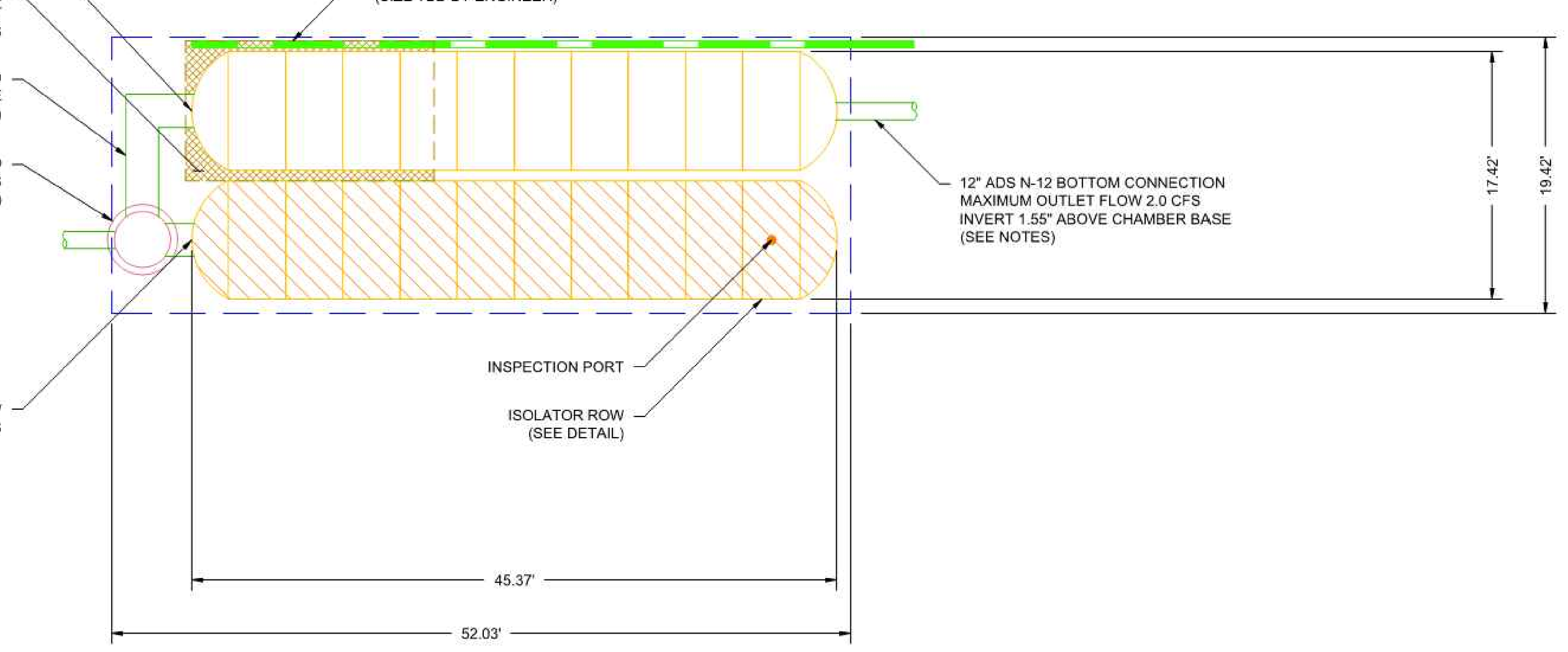

ACMA - BEAVERTON SCHOOL
BEAVERTON, OR
DATE: 03/11/19 DRAWN: SLV
PROJECT #: S124306 CHECKED: JPR

DATE	DRWN	CHKD	DESCRIPTION

StormTech Detention • Retention • Water Quality
70 INWOOD ROAD, SUITE 3 | ROCKY HILL | CT | 06067
860-529-8188 | 888-892-2694 | WWW.STORMTECH.COM

ADS ADVANCED DRAINAGE SYSTEMS, INC. 4640 TRUEMAN BLVD HILLIARD, OH 43026

0 10' 20'

THIS DRAWING HAS BEEN PREPARED BASED ON INFORMATION PROVIDED TO ADS UNDER THE DIRECTION OF THE SITE DESIGN ENGINEER OR OTHER PROJECT REPRESENTATIVE. THE SITE DESIGN ENGINEER SHALL REVIEW THIS DRAWING PRIOR TO CONSTRUCTION. IT IS THE ULTIMATE RESPONSIBILITY OF THE SITE DESIGN ENGINEER TO ENSURE THAT THE PRODUCT(S) DEPICTED AND ALL ASSOCIATED DETAILS MEET ALL APPLICABLE LAWS, REGULATIONS, AND PROJECT REQUIREMENTS.

SHEET 2 OF 6

ACCEPTABLE FILL MATERIALS: STORMTECH MC-4500 CHAMBER SYSTEMS

MATERIAL LOCATION		DESCRIPTION	AASHTO MATERIAL CLASSIFICATIONS	COMPACTION / DENSITY REQUIREMENT
D	**FINAL FILL:** FILL MATERIAL FOR LAYER 'D' STARTS FROM THE TOP OF THE 'C' LAYER TO THE BOTTOM OF FLEXIBLE PAVEMENT OR UNPAVED FINISHED GRADE ABOVE. NOTE THAT PAVEMENT SUBBASE MAY BE PART OF THE 'D' LAYER	ANY SOIL/ROCK MATERIALS, NATIVE SOILS, OR PER ENGINEER'S PLANS. CHECK PLANS FOR PAVEMENT SUBGRADE REQUIREMENTS.	N/A	PREPARE PER SITE DESIGN ENGINEER'S PLANS. PAVED INSTALLATIONS MAY HAVE STRINGENT MATERIAL AND PREPARATION REQUIREMENTS.
C	**INITIAL FILL:** FILL MATERIAL FOR LAYER 'C' STARTS FROM THE TOP OF THE EMBEDMENT STONE ('B' LAYER) TO 24" (600 mm) ABOVE THE TOP OF THE CHAMBER. NOTE THAT PAVEMENT SUBBASE MAY BE A PART OF THE 'C' LAYER.	GRANULAR WELL-GRADED SOIL/AGGREGATE MIXTURES, <35% FINES OR PROCESSED AGGREGATE. MOST PAVEMENT SUBBASE MATERIALS CAN BE USED IN LIEU OF THIS LAYER.	AASHTO M145[1] A-1, A-2-4, A-3 OR AASHTO M43[1] 3, 357, 4, 467, 5, 56, 57, 6, 67, 68, 7, 78, 8, 89, 9, 10	BEGIN COMPACTIONS AFTER 24" (600 mm) OF MATERIAL OVER THE CHAMBERS IS REACHED. COMPACT ADDITIONAL LAYERS IN 12" (300 mm) MAX LIFTS TO A MIN. 95% PROCTOR DENSITY FOR WELL GRADED MATERIAL AND 95% RELATIVE DENSITY FOR PROCESSED AGGREGATE MATERIALS.
B	**EMBEDMENT STONE:** FILL SURROUNDING THE CHAMBERS FROM THE FOUNDATION STONE ('A' LAYER) TO THE 'C' LAYER ABOVE.	CLEAN, CRUSHED, ANGULAR STONE	AASHTO M43[1] 3, 4	NO COMPACTION REQUIRED.
A	**FOUNDATION STONE:** FILL BELOW CHAMBERS FROM THE SUBGRADE UP TO THE FOOT (BOTTOM) OF THE CHAMBER.	CLEAN, CRUSHED, ANGULAR STONE	AASHTO M43[1] 3, 4	PLATE COMPACT OR ROLL TO ACHIEVE A FLAT SURFACE.[2,3]

PLEASE NOTE:
1. THE LISTED AASHTO DESIGNATIONS ARE FOR GRADATIONS ONLY. THE STONE MUST ALSO BE CLEAN, CRUSHED, ANGULAR. FOR EXAMPLE, A SPECIFICATION FOR #4 STONE WOULD STATE: "CLEAN, CRUSHED, ANGULAR NO. 4 (AASHTO M43) STONE".
2. STORMTECH COMPACTION REQUIREMENTS ARE MET FOR 'A' LOCATION MATERIALS WHEN PLACED AND COMPACTED IN 9" (230 mm) (MAX) LIFTS USING TWO FULL COVERAGES WITH A VIBRATORY COMPACTOR.
3. WHERE INFILTRATION SURFACES MAY BE COMPROMISED BY COMPACTION, FOR STANDARD DESIGN LOAD CONDITIONS, A FLAT SURFACE MAY BE ACHIEVED BY RAKING OR DRAGGING WITHOUT COMPACTION EQUIPMENT. FOR SPECIAL LOAD DESIGNS, CONTACT STORMTECH FOR COMPACTION REQUIREMENTS.
4. ONCE LAYER 'C' IS PLACED, ANY SOIL/MATERIAL CAN BE PLACED IN LAYER 'D' UP TO THE FINISHED GRADE. MOST PAVEMENT SUBBASE SOILS CAN BE USED TO REPLACE THE MATERIAL REQUIREMENTS OF LAYER 'C' OR 'D' AT THE SITE DESIGN ENGINEER'S DISCRETION.

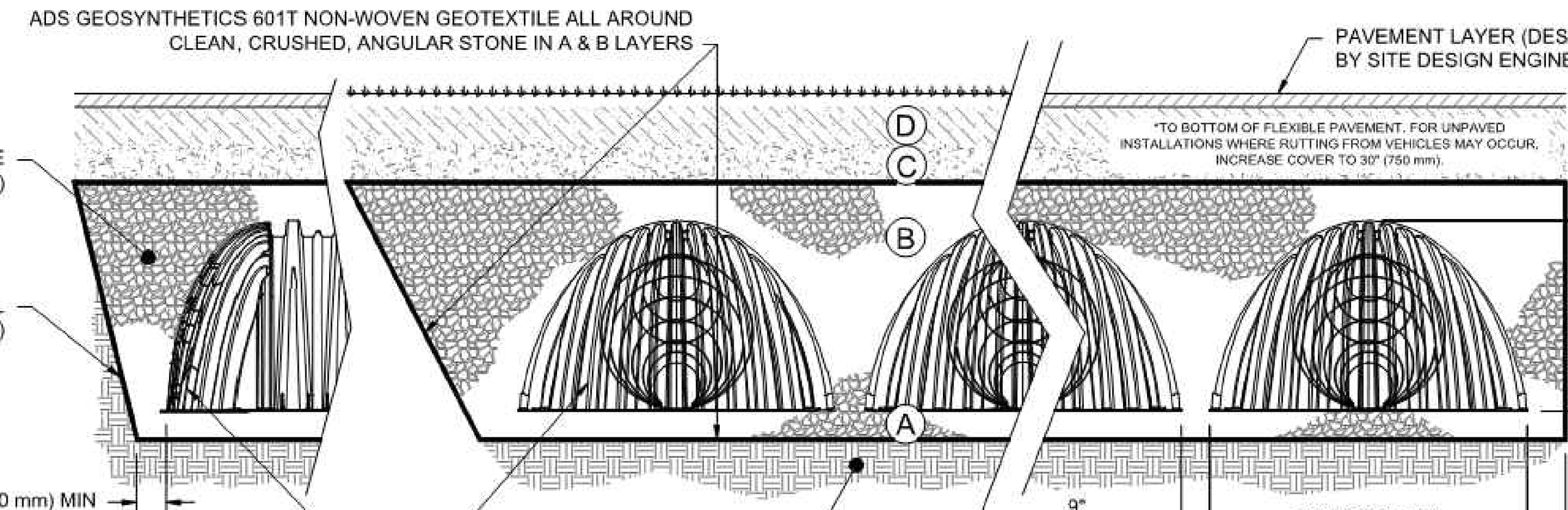

NOTES:

1. CHAMBERS SHALL MEET THE REQUIREMENTS OF ASTM F2418-16a, "STANDARD SPECIFICATION FOR POLYPROPYLENE (PP) CORRUGATED WALL STORMWATER COLLECTION CHAMBERS" CHAMBER CLASSIFICATION 60x101
2. MC-4500 CHAMBERS SHALL BE DESIGNED IN ACCORDANCE WITH ASTM F2787 "STANDARD PRACTICE FOR STRUCTURAL DESIGN OF THERMOPLASTIC CORRUGATED WALL STORMWATER COLLECTION CHAMBERS".
3. THE SITE DESIGN ENGINEER IS RESPONSIBLE FOR ASSESSING THE BEARING RESISTANCE (ALLOWABLE BEARING CAPACITY) OF THE SUBGRADE SOILS AND THE DEPTH OF FOUNDATION STONE WITH CONSIDERATION FOR THE RANGE OF EXPECTED SOIL MOISTURE CONDITIONS.
4. PERIMETER STONE MUST BE EXTENDED HORIZONTALLY TO THE EXCAVATION WALL FOR BOTH VERTICAL AND SLOPED EXCAVATION WALLS.
5. REQUIREMENTS FOR HANDLING AND INSTALLATION:
   - TO MAINTAIN THE WIDTH OF CHAMBERS DURING SHIPPING AND HANDLING, CHAMBERS SHALL HAVE INTEGRAL, INTERLOCKING STACKING LUGS.
   - TO ENSURE A SECURE JOINT DURING INSTALLATION AND BACKFILL, THE HEIGHT OF THE CHAMBER JOINT SHALL NOT BE LESS THAN 3".
   - TO ENSURE THE INTEGRITY OF THE ARCH SHAPE DURING INSTALLATION, a) THE ARCH STIFFNESS CONSTANT AS DEFINED IN SECTION 6.2.8 OF ASTM F2418 SHALL BE GREATER THAN OR EQUAL TO 500 LBS/IN/IN. AND b) TO RESIST CHAMBER DEFORMATION DURING INSTALLATION AT ELEVATED TEMPERATURES (ABOVE 73° F / 23° C), CHAMBERS SHALL BE PRODUCED FROM REFLECTIVE GOLD OR YELLOW COLORS.

SHEET 3 OF 6

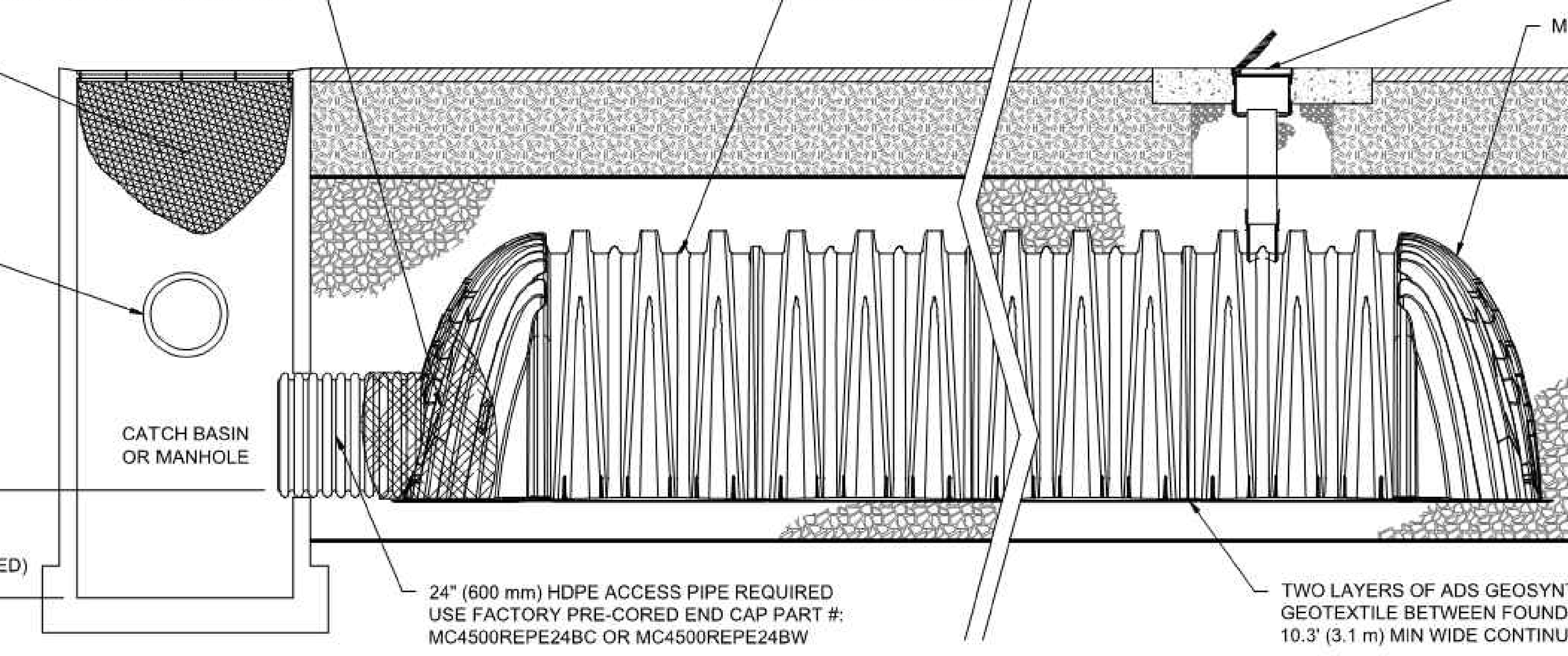

MC-4500 ISOLATOR ROW DETAIL
NTS

INSPECTION & MAINTENANCE

STEP 1) INSPECT ISOLATOR ROW FOR SEDIMENT
- A. INSPECTION PORTS (IF PRESENT)
  - A.1. REMOVE/OPEN LID ON NYLOPLAST INLINE DRAIN
  - A.2. REMOVE AND CLEAN FLEXSTORM FILTER IF INSTALLED
  - A.3. USING A FLASHLIGHT AND STADIA ROD, MEASURE DEPTH OF SEDIMENT AND RECORD ON MAINTENANCE LOG
  - A.4. LOWER A CAMERA INTO ISOLATOR ROW FOR VISUAL INSPECTION OF SEDIMENT LEVELS (OPTIONAL)
  - A.5. IF SEDIMENT IS AT, OR ABOVE, 3" (80 mm) PROCEED TO STEP 2. IF NOT, PROCEED TO STEP 3.
- B. ALL ISOLATOR ROWS
  - B.1. REMOVE COVER FROM STRUCTURE AT UPSTREAM END OF ISOLATOR ROW
  - B.2. USING A FLASHLIGHT, INSPECT DOWN THE ISOLATOR ROW THROUGH OUTLET PIPE
    - i) MIRRORS ON POLES OR CAMERAS MAY BE USED TO AVOID A CONFINED SPACE ENTRY
    - ii) FOLLOW OSHA REGULATIONS FOR CONFINED SPACE ENTRY IF ENTERING MANHOLE
  - B.3. IF SEDIMENT IS AT, OR ABOVE, 3" (80 mm) PROCEED TO STEP 2. IF NOT, PROCEED TO STEP 3.

STEP 2) CLEAN OUT ISOLATOR ROW USING THE JETVAC PROCESS
- A. A FIXED CULVERT CLEANING NOZZLE WITH REAR FACING SPREAD OF 45" (1.1 m) OR MORE IS PREFERRED
- B. APPLY MULTIPLE PASSES OF JETVAC UNTIL BACKFLUSH WATER IS CLEAN
- C. VACUUM STRUCTURE SUMP AS REQUIRED

STEP 3) REPLACE ALL COVERS, GRATES, FILTERS, AND LIDS; RECORD OBSERVATIONS AND ACTIONS.

STEP 4) INSPECT AND CLEAN BASINS AND MANHOLES UPSTREAM OF THE STORMTECH SYSTEM.

NOTES

1. INSPECT EVERY 6 MONTHS DURING THE FIRST YEAR OF OPERATION. ADJUST THE INSPECTION INTERVAL BASED ON PREVIOUS OBSERVATIONS OF SEDIMENT ACCUMULATION AND HIGH WATER ELEVATIONS.
2. CONDUCT JETTING AND VACTORING ANNUALLY OR WHEN INSPECTION SHOWS THAT MAINTENANCE IS NECESSARY.

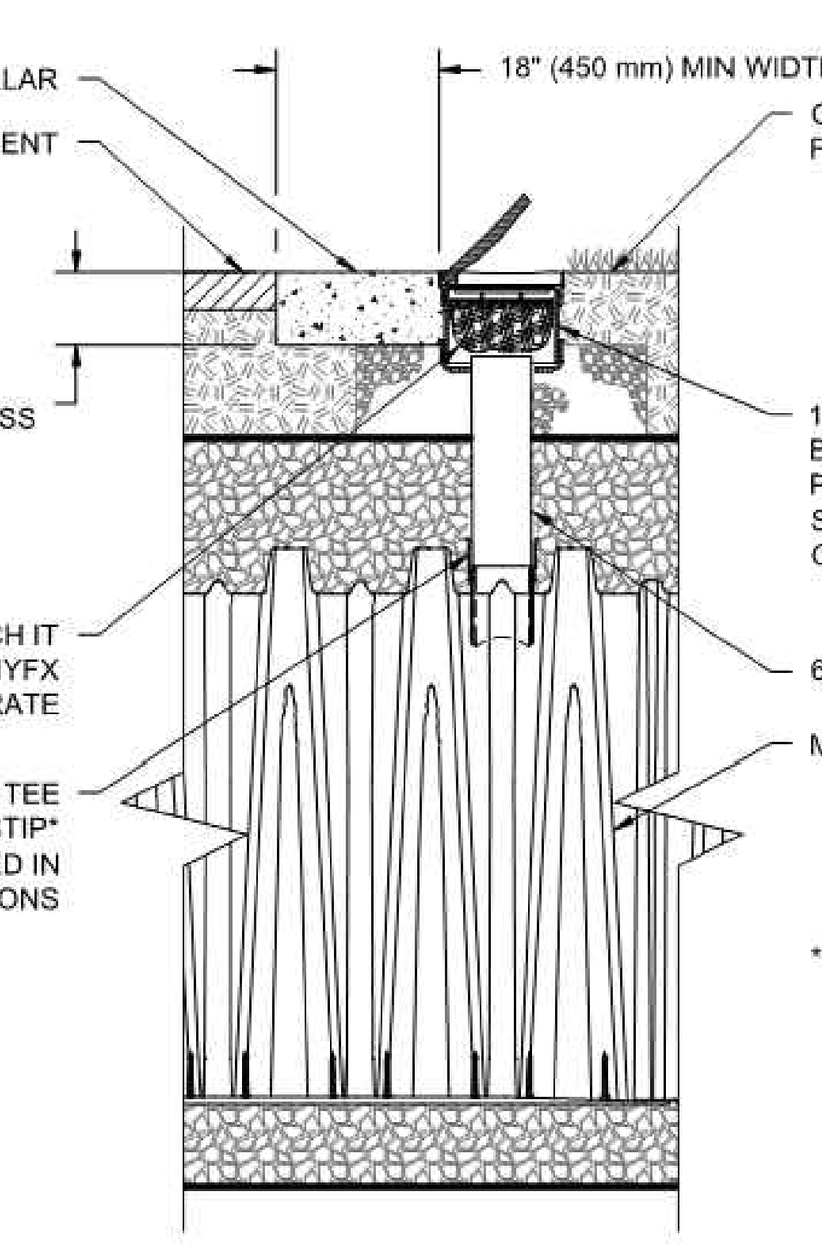

* THE PART# **2712AG6IPKIT** CAN BE USED TO ORDER ALL NECESSARY COMPONENTS FOR A SOLID LID INSPECTION PORT INSTALLATION

MC-4500 6" (150 mm) INSPECTION PORT DETAIL
NTS

SHEET 4 OF 6

HHPR Harper Houf Peterson Righellis Inc.
ENGINEERS • PLANNERS
LANDSCAPE ARCHITECTS • SURVEYORS
205 SE Spokane Street, Suite 200, Portland, OR 97202
phone: 503.221.1131 www.hhpr.com fax: 503.221.1171

BID/PERMIT SET

CONDITIONAL USE NUMBER: CU2018-0016
DESIGN REVIEW NUMBER: DR2018-0114
SITE DEVELOPMENT PERMIT NUMBER: TBD
BUILDING PERMIT NUMBER: TBD

REGISTERED PROFESSIONAL ENGINEER 59,971 OREGON JAN. 11, 2005 JANELLE LYNN BRANNAN
EXPIRES: 12/31/2019

UTILITY DETAILS
ACMA
BEAVERTON SCHOOL DISTRICT

C5.11
74-18109-00
03/14/19
REVISIONS

DLR Group Architecture Planning Interiors

© 2018, DLR Group Architecture & Planning inc., an Oregon corporation, ALL RIGHTS RESERVED

MC-4500 TECHNICAL SPECIFICATION

NTS

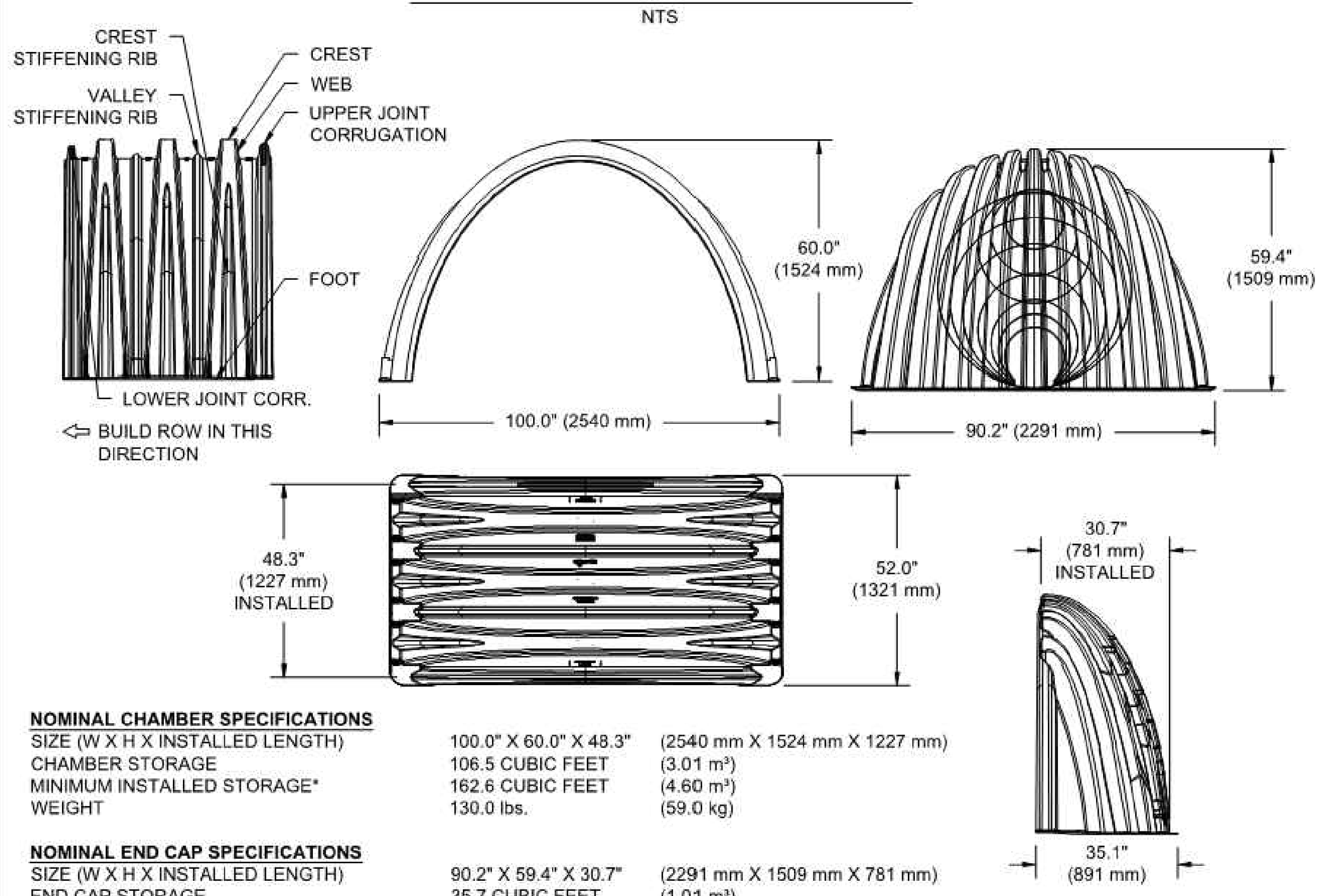

NOMINAL CHAMBER SPECIFICATIONS

SIZE (W X H X INSTALLED LENGTH)	100.0" X 60.0" X 48.3"	(2540 mm X 1524 mm X 1227 mm)
CHAMBER STORAGE	106.5 CUBIC FEET	(3.01 m³)
MINIMUM INSTALLED STORAGE*	162.6 CUBIC FEET	(4.60 m³)
WEIGHT	130.0 lbs.	(59.0 kg)

NOMINAL END CAP SPECIFICATIONS

SIZE (W X H X INSTALLED LENGTH)	90.2" X 59.4" X 30.7"	(2291 mm X 1509 mm X 781 mm)
END CAP STORAGE	35.7 CUBIC FEET	(1.01 m³)
MINIMUM INSTALLED STORAGE*	108.7 CUBIC FEET	(3.08 m³)
WEIGHT	135.0 lbs.	(61.2 kg)

*ASSUMES 12" (305 mm) STONE ABOVE, 9" (229 mm) STONE FOUNDATION AND BETWEEN CHAMBERS, 12" (305 mm) STONE PERIMETER IN FRONT OF END CAPS AND 40% STONE POROSITY.

STUBS AT BOTTOM OF END CAP FOR PART NUMBERS ENDING WITH "B"
STUBS AT TOP OF END CAP FOR PART NUMBERS ENDING WITH "T"
END CAPS WITH A WELDED CROWN PLATE END WITH "C"
END CAPS WITH A PREFABRICATED WELDED STUB END WITH "W"

PART #	STUB	B	C
MC4500REPE06T	6" (150 mm)	42.54" (1.081 m)	---
MC4500REPE06B		---	0.86" (22 mm)
MC4500REPE08T	8" (200 mm)	40.50" (1.029 m)	---
MC4500REPE08B		---	1.01" (26 mm)
MC4500REPE10T	10" (250 mm)	38.37" (975 mm)	---
MC4500REPE10B		---	1.33" (34 mm)
MC4500REPE12T	12" (300 mm)	35.69" (907 mm)	---
MC4500REPE12B		---	1.55" (39 mm)
MC4500REPE15T	15" (375 mm)	32.72" (831 mm)	---
MC4500REPE15B		---	1.70" (43 mm)
MC4500REPE18TC	18" (450 mm)	29.36" (746 mm)	---
MC4500REPE18TW			
MC4500REPE18BC		---	1.97" (50 mm)
MC4500REPE18BW			
MC4500REPE24TC	24" (600 mm)	23.05" (585 mm)	---
MC4500REPE24TW			
MC4500REPE24BC		---	2.26" (57 mm)
MC4500REPE24BW			
MC4500REPE30BC	30" (750 mm)	---	2.95" (75 mm)
MC4500REPE36BC	36" (900 mm)	---	3.25" (83 mm)
MC4500REPE42BC	42" (1050 mm)	---	3.55" (90 mm)

NOTE: ALL DIMENSIONS ARE NOMINAL

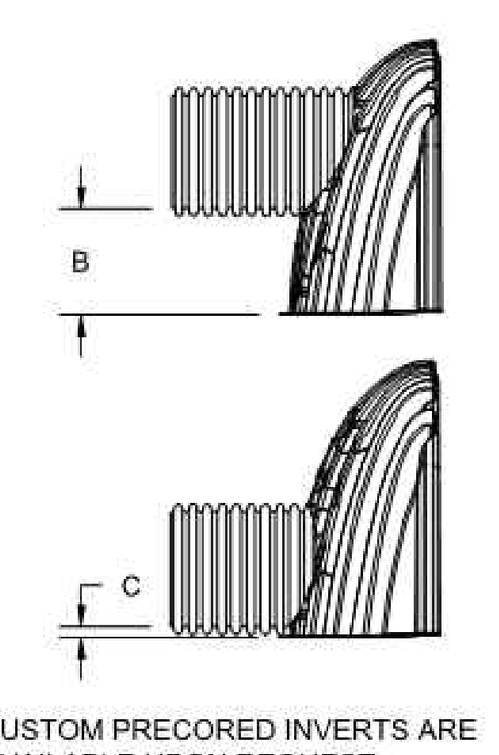

CUSTOM PRECORED INVERTS ARE AVAILABLE UPON REQUEST. INVENTORIED MANIFOLDS INCLUDE 12-24" (300-600 mm) SIZE ON SIZE AND 15-48" (375-1200 mm) ECCENTRIC MANIFOLDS. CUSTOM INVERT LOCATIONS ON THE MC-4500 END CAP CUT IN THE FIELD ARE NOT RECOMMENDED FOR PIPE SIZES GREATER THAN 10" (250 mm). THE INVERT LOCATION IN COLUMN 'B' ARE THE HIGHEST POSSIBLE FOR THE PIPE SIZE.

UNDERDRAIN DETAIL

NTS

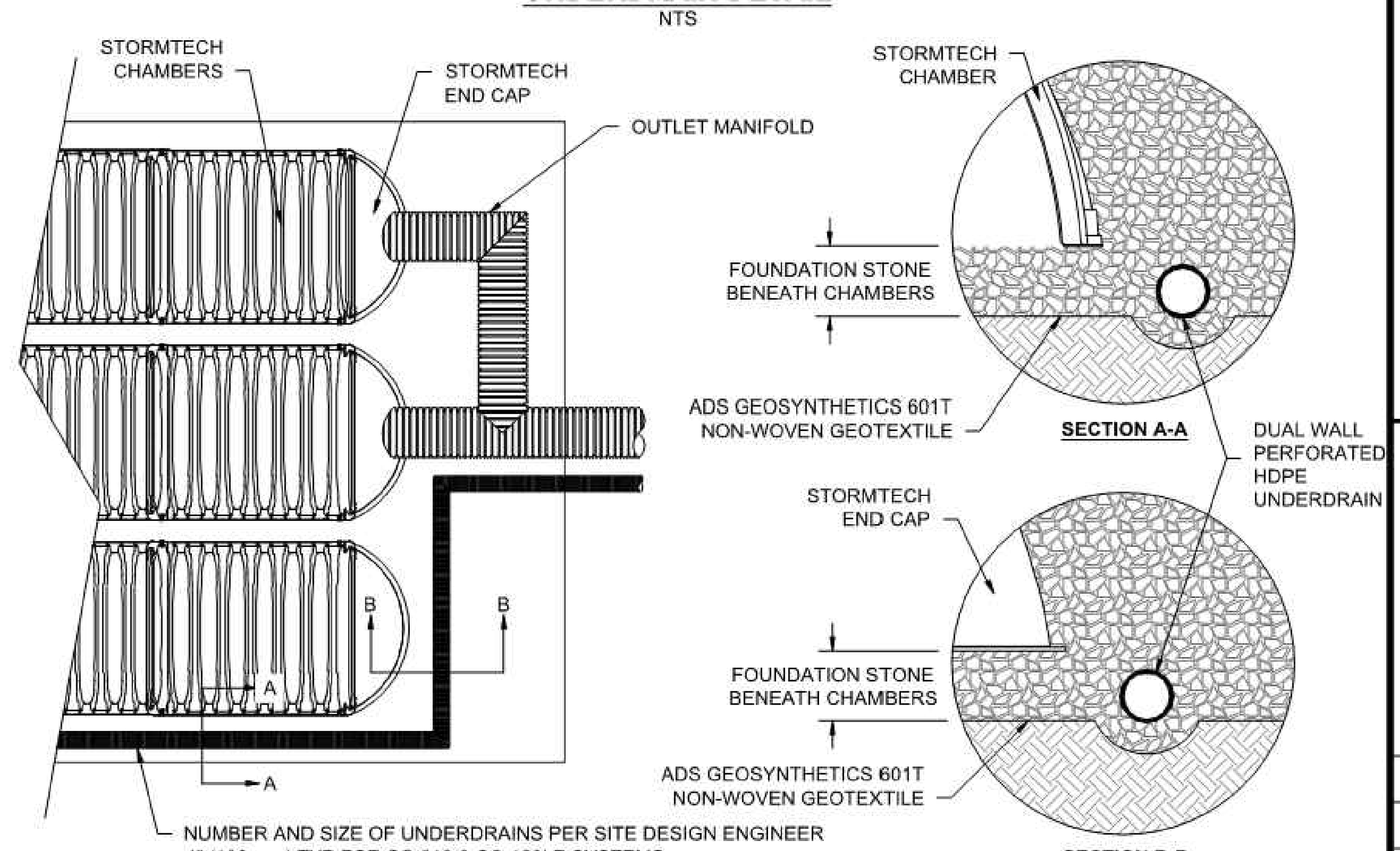

MC-SERIES END CAP INSERTION DETAIL

NTS

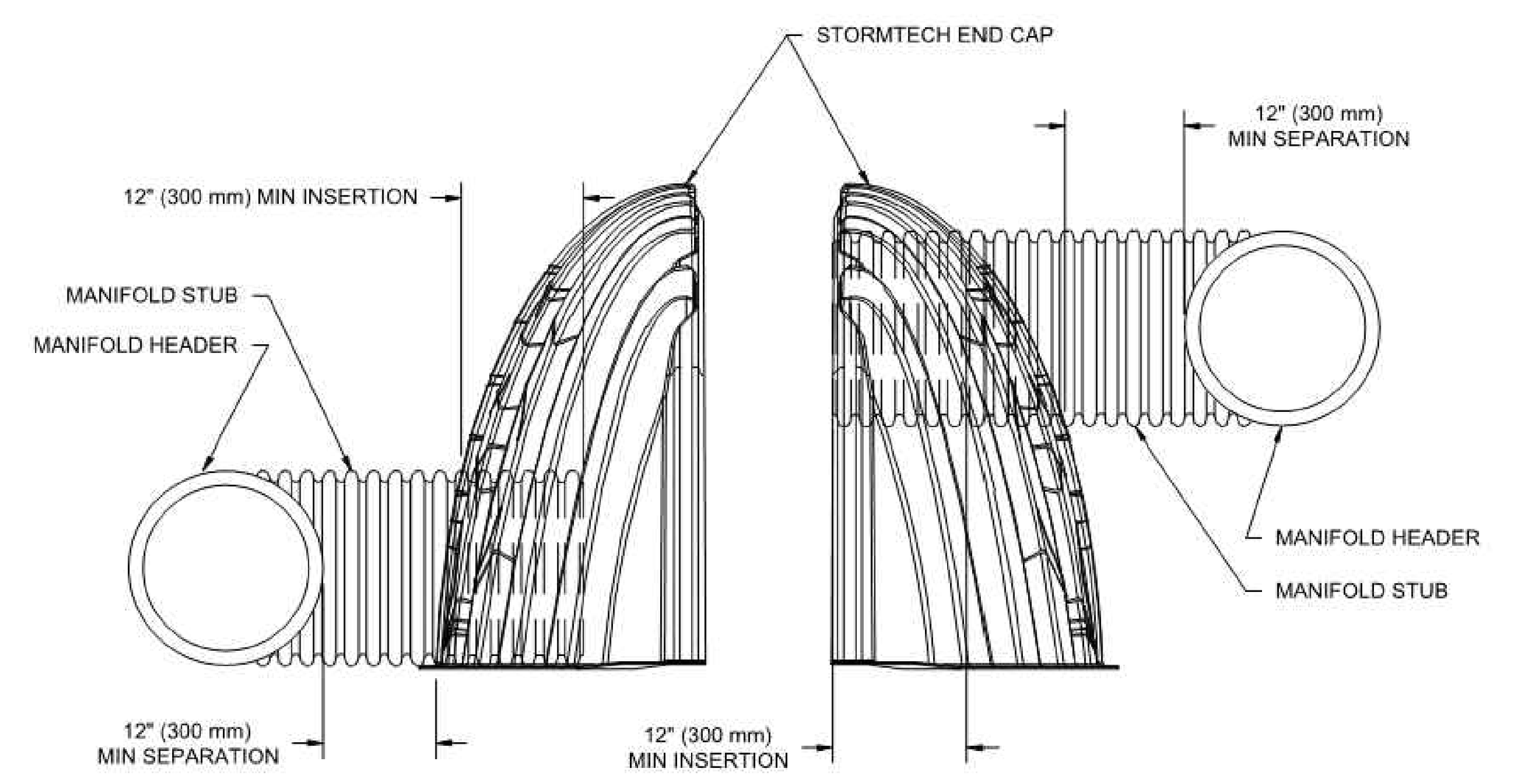

NOTE: MANIFOLD STUB MUST BE LAID HORIZONTAL FOR A PROPER FIT IN END CAP OPENING.

ACMA - BEAVERTON SCHOOL
BEAVERTON, OR

DATE:	03/11/19	DRAWN:	SLV
PROJECT #:	S124306	CHECKED:	JPR

DATE	DRWN	CHKD	DESCRIPTION

StormTech
Detention•Retention•Water Quality
70 INWOOD ROAD, SUITE 3 | ROCKY HILL | CT | 06067
860-529-8188 | 888-892-2694 | WWW.STORMTECH.COM

ADS
ADVANCED DRAINAGE SYSTEMS, INC.
4640 TRUEMAN BLVD
HILLIARD, OH 43026

THIS DRAWING HAS BEEN PREPARED BASED ON INFORMATION PROVIDED TO ADS UNDER THE DIRECTION OF THE SITE DESIGN ENGINEER OR OTHER PROJECT REPRESENTATIVE. THE SITE DESIGN ENGINEER SHALL REVIEW THIS DRAWING PRIOR TO CONSTRUCTION. IT IS THE ULTIMATE RESPONSIBILITY OF THE SITE DESIGN ENGINEER TO ENSURE THAT THE PRODUCT(S) DEPICTED AND ALL ASSOCIATED DETAILS MEET ALL APPLICABLE LAWS, REGULATIONS, AND PROJECT REQUIREMENTS.

SHEET 5 OF 6

HP MANHOLE INSTALLATION

NTS

NOTES:

1. FOR BURIAL DEPTHS GREATER THAN 15' (4.57 m), OR WHERE GROUND WATER WILL BE ENCOUNTERED, CONTACT ADS ENGINEERING SERVICES.
2. AVOID CONSTRUCTION LOADING ON STRUCTURE PRIOR TO CONCRETE COLLAR INSTALLATION.

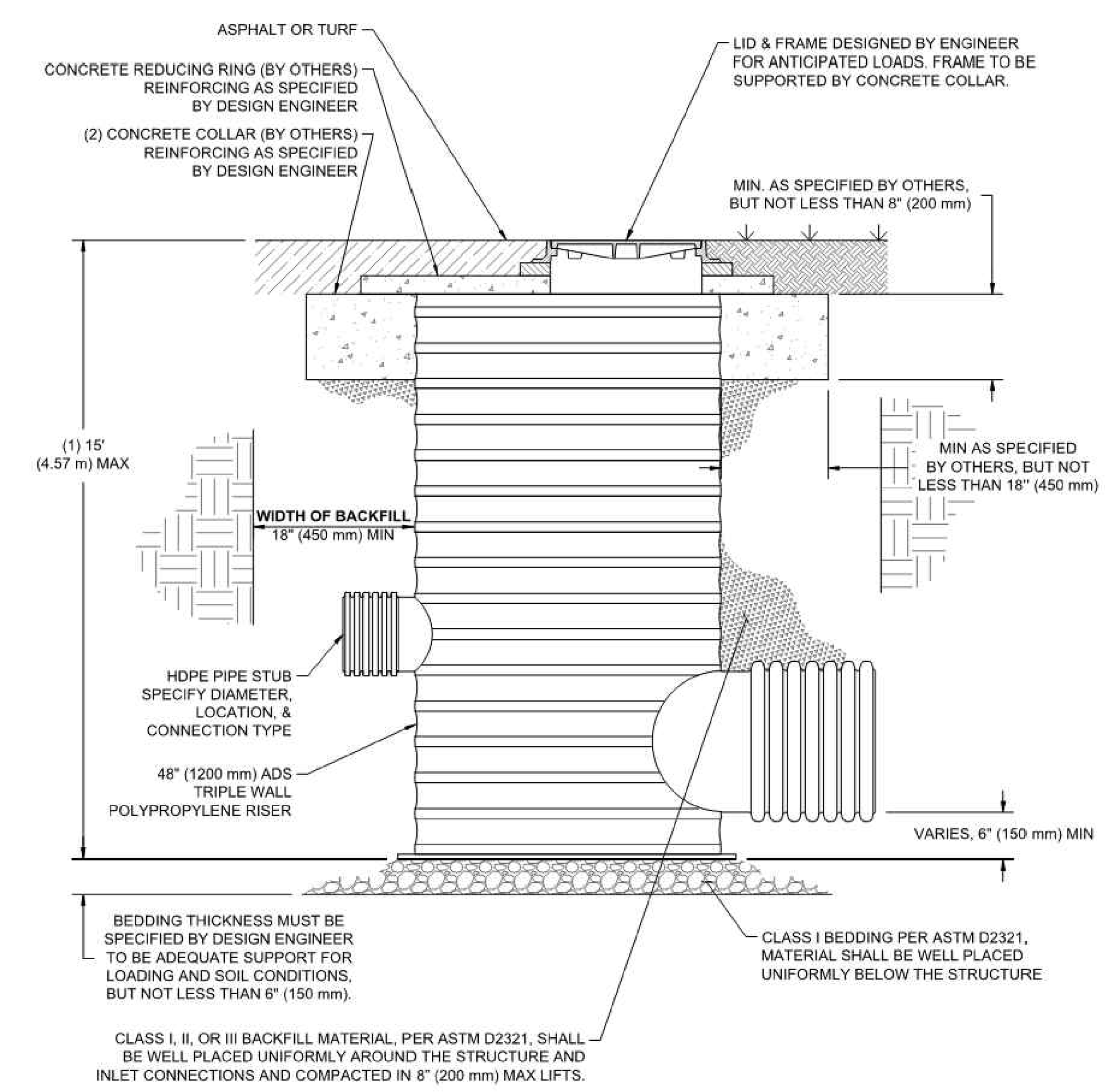

ACMA - BEAVERTON SCHOOL
BEAVERTON, OR

DATE:	03/11/19	DRAWN:	SLV
PROJECT #:	S124306	CHECKED:	JPR

DATE	DRWN	CHKD	DESCRIPTION

Nyloplast
3130 VERONA AVE
BUFORD, GA 30518
PHN (770) 932-2443
FAX (770) 932-2490
www.nyloplast-us.com

ADS
4640 TRUEMAN BLVD
HILLIARD, OH 43026

THIS DRAWING HAS BEEN PREPARED BASED ON INFORMATION PROVIDED TO ADS UNDER THE DIRECTION OF THE SITE DESIGN ENGINEER OR OTHER PROJECT REPRESENTATIVE. THE SITE DESIGN ENGINEER SHALL REVIEW THIS DRAWING PRIOR TO CONSTRUCTION. IT IS THE ULTIMATE RESPONSIBILITY OF THE SITE DESIGN ENGINEER TO ENSURE THAT THE PRODUCT(S) DEPICTED AND ALL ASSOCIATED DETAILS MEET ALL APPLICABLE LAWS, REGULATIONS, AND PROJECT REQUIREMENTS.

SHEET 6 OF 6

Figure 510.5 - Flow Control Detail

STORAGE FACILITY

Peak 100 Yr. Elev	200.81	Peak Volume	3,891 cf	PeakQ In	1.680 cfs
Peak 25 Yr. Elev	199.81	Peak Volume	3,083 cf	PeakQ In	1.372 cfs
Peak 10 Yr. Elev	198.94	Peak Volume	2,488 cf	PeakQ In	1.143 cfs
Peak 2 Yr. Elev	197.58	Peak Volume	1,413 cf	PeakQ In	0.678 cfs
Peak WQ Elev	N/A	Peak Volume	N/A	PeakQ In	N/A

Storage Facility

Pond Freeboard Elev N/A

Secondary Spillway Elev N/A

FLOW CONTROL STRUCTURE

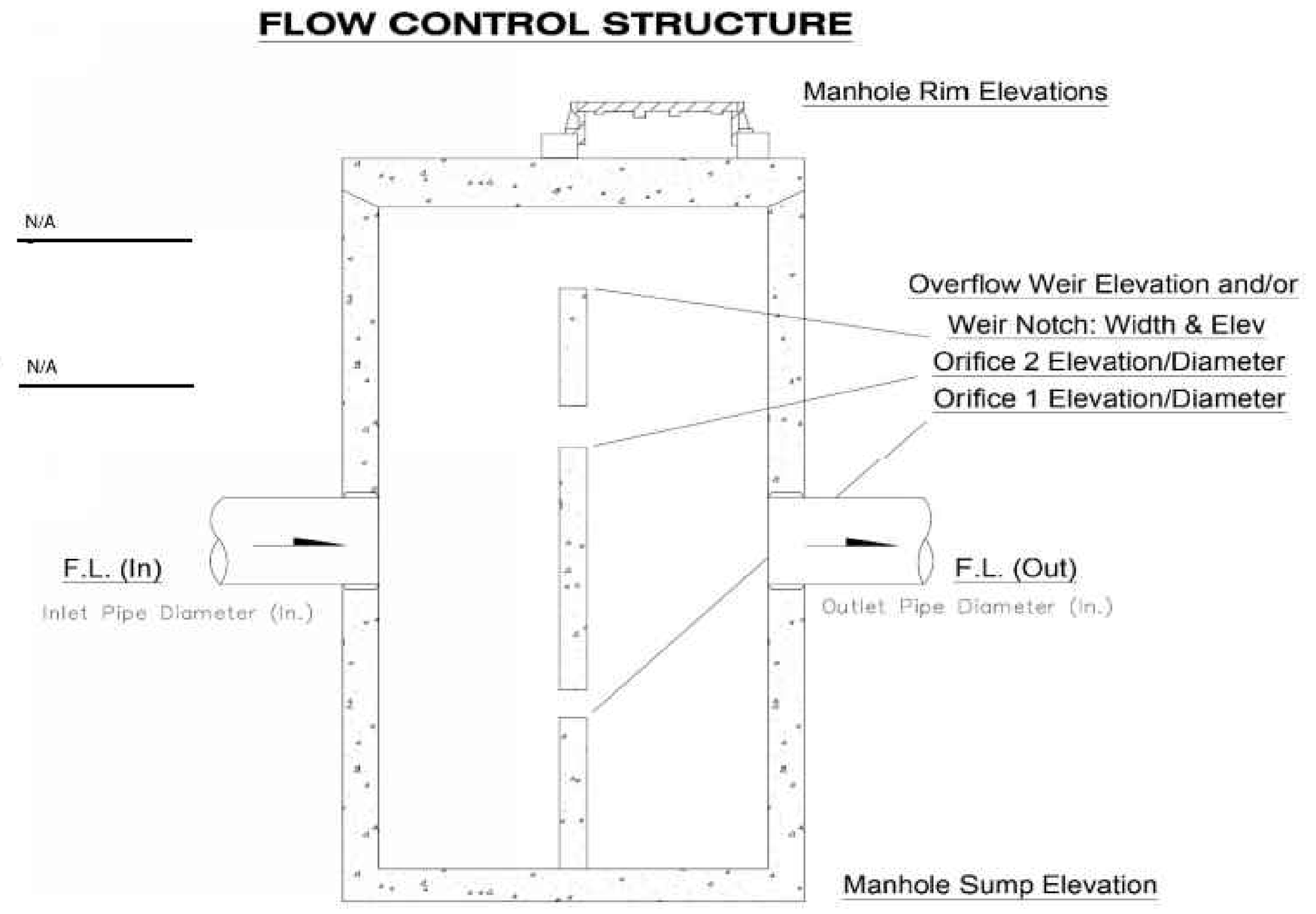

100 Yr.	PeakQ Out	0.692 cfs
25 Yr.	PeakQ Out	0.570 cfs
10 Yr.	PeakQ Out	0.488 cfs
2 Yr.	PeakQ Out	0.324 cfs
WQ	PeakQ Out	N/A

FLOW CONTROL STRUCTURE TABLE

Diameter of Manhole (In.)	60
F.L. (In)	196.88
F.L. (Out)	196.29
Inlet Pipe Diameter (In.)	12
Outlet Pipe Diameter (In.)	12
# Of Flow Control Orifices	1
Orifice 1 Elevation	194.29
Diameter of Orifice 1 (In.)	3.5
Orifice 2 Elevation	N/A
Diameter of Orifice 2 (In.)	N/A
Weir Notch Elevation	200.79
Weir Notch Width	N/A
Manhole Sump Elevation	192.29
Overflow Weir Elevation	200.79
Manhole Rim Elevation	207.06

Note to Facility Designer: This figure and table is to convey and confirm the storm water calculations match the actual design of the facility.

Beaverton
OREGON

Provided courtesy of DOWL Engineers

NOTES:

1. BAFFLE WALL SHALL HAVE #4 BAR AT 12" SPACING EACH WAY.
2. WATER TIGHT SEAL OF THE CONCRETE BAFFLE WALL AND MANHOLE WALL/FLOOR VIA INTEGRALLY CAST CONSTRUCTION BY THE MANHOLE MANUFACTURER OR EQUIVALENT.
3. UPPER FLOW ORIFICE SHALL BE ALUMINUM, ALUMINIZED STEEL OR TREATMENT 1 GALVANIZED STEEL.
4. FRAME AND LADDER OR STEPS ARE TO BE OFFSET SO THAT SHEAR GATE IS VISIBLE FROM THE TOP; CLIMB-DOWN SPACE IS CLEAR OF RISER AND GATE; FRAME IS CLEAR OF CURB.
5. MULTI-ORIFICE ELBOWS SHALL BE PRE-INSTALLED TO INSURE LADDER CLEARANCE.
6. RESTRICTOR PLATE WITH ORIFICE AS SPECIFIED IN THE CONTRACT. OPENING IS TO BE CUT ROUND AND SMOOTH. NEOPRENE GASKET SHALL BE INSTALLED BETWEEN THE ORIFICE PLATE AND CONCRETE BAFFLE TO PROVIDE A WATERTIGHT SEAL.
7. SHEAR GATE SHALL BE MADE OF ALUMINUM ALLOY IN ACCORDANCE WITH ASTM B 26M AND ASTM B 275, DESIGNATION Zg32A OR CAST IRON IN ACCORDANCE WITH ASTM A 48, CLASS 30B. LIFT HANDLE MAY BE SOLID ROD OR HOLLOW TUBING WITH ADJUSTABLE HOOK AS REQUIRED. NEOPRENE RUBBER GASKET REQUIRED BETWEEN RISER MOUNTING FLANGE AND GATE FLANGE. MATING SURFACES OF LID AND BODY SHALL BE MACHINED FOR PROPER FIT. FLANGE MOUNTING BOLTS SHALL BE....."DIAMETER STAINLESS STEEL.
8. SHEAR GATE MAXIMUM OPENING SHALL BE CONTROLLED BY LIMITED HINGE MOVEMENT, STOP TAB OR SOME OTHER DEVISE.
9. ALTERNATE SHEAR GATES DESIGNS ARE ACCEPTABLE, IF MATERIAL SPECIFICATIONS ARE MET AND FLANGE BOLT PATTERN MATCHES.
10. MANHOLE CERTIFICATION REQUIRED FOR TRAFFIC LOADING.

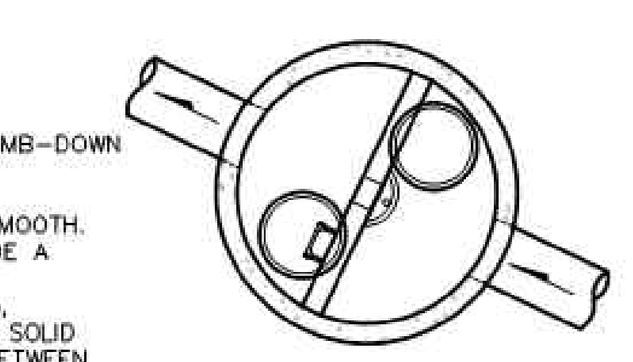

PLAN

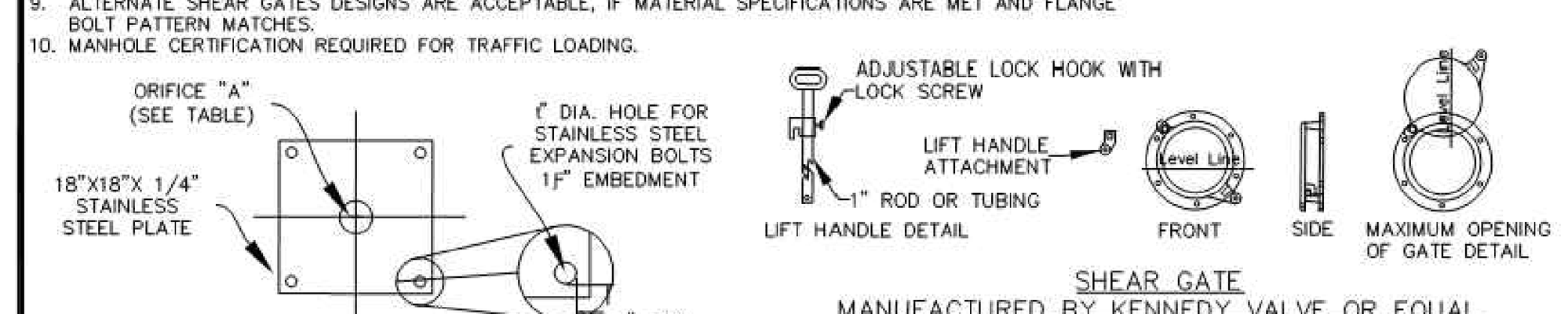

RESTRICTOR PLATE, ORIFICE

SHEAR GATE
MANUFACTURED BY KENNEDY VALVE OR EQUAL

INSTALLATION NOTE:

POSITION HOOD SUCH THAT BOTTOM FLANGE IS MIN 2" BELOW THE ORIFICE B INVERT.

ONE SNOUT MAY BE USE FOR BOTH ORIFICE C AND B.

IT MAY NEED BE NECESSARY TO USE TWO SNOUTS AND OFF SET ORIFICES TO MEET PLAN ELEVATION.

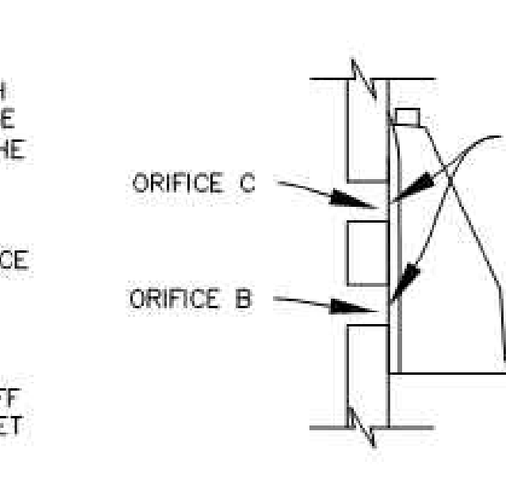

SNOUT DETAIL

FLOW CONTROL STRUCTURE TABLE

Diameter Of Manhole (In.)	60" MIN	60
F.L. (In)		196.88
F.L. (Out)		196.29
Outlet Pipe Diameter (In.)		12
Number Of Orifice		1
Orifice A Elevation		194.29
Diameter Of Orifice A (In.)		3.5
Orifice B Elevation		N/A
Diameter Of Orifice B (In.)		N/A
Orifice C Elevation		N/A
Diameter Of Orifice C (In)		N/A
Overflow Elevation		200.79
Rim Elevation		207.06

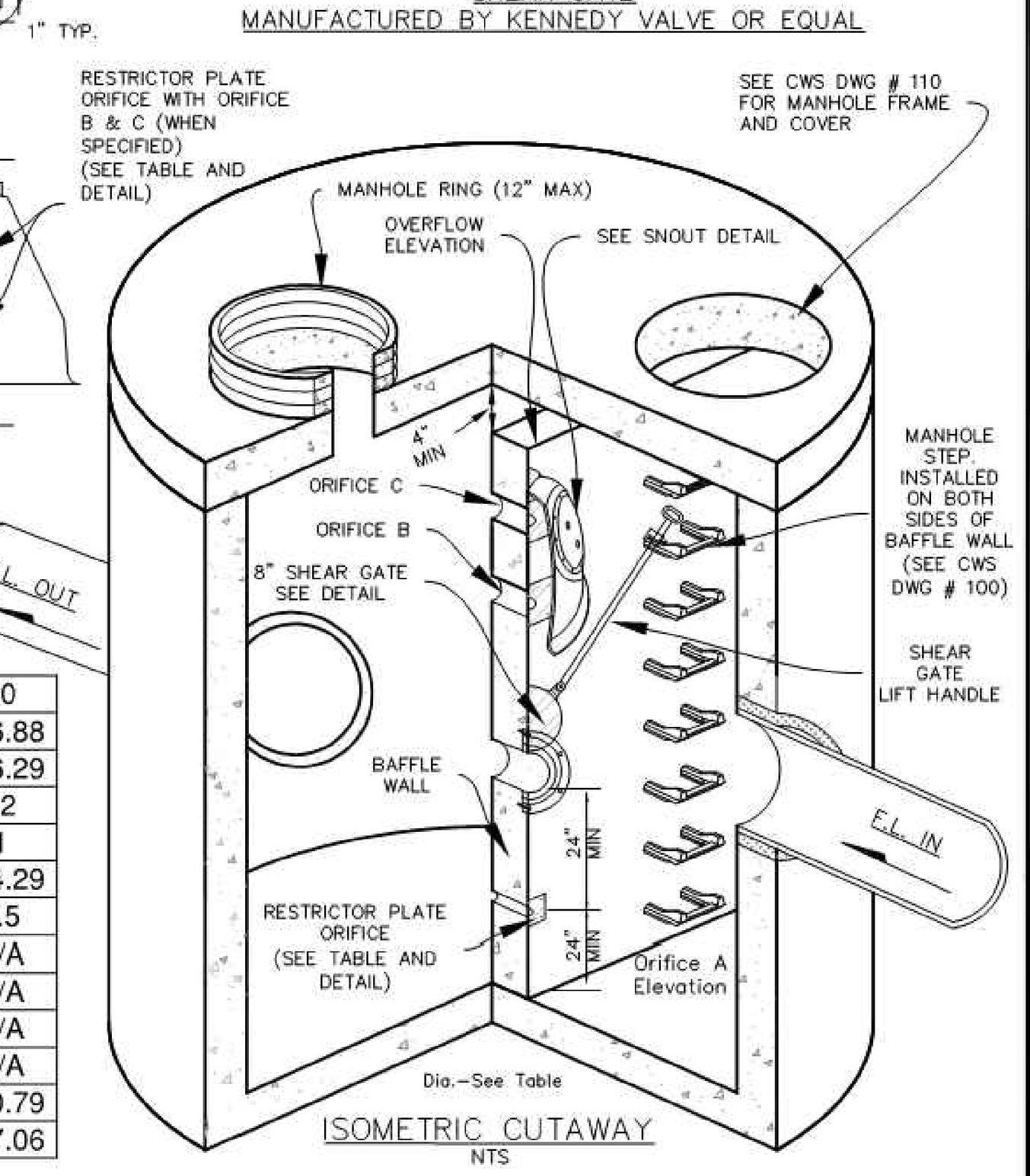

ISOMETRIC CUTAWAY
NTS

Beaverton ENGINEERING	CWS FLOW CONTROL STRUCTURE WITH C.O.B. MODIFICATIONS	SCALE: NONE / DATE: JUNE 2018	360

FILENAME: 360.dwg

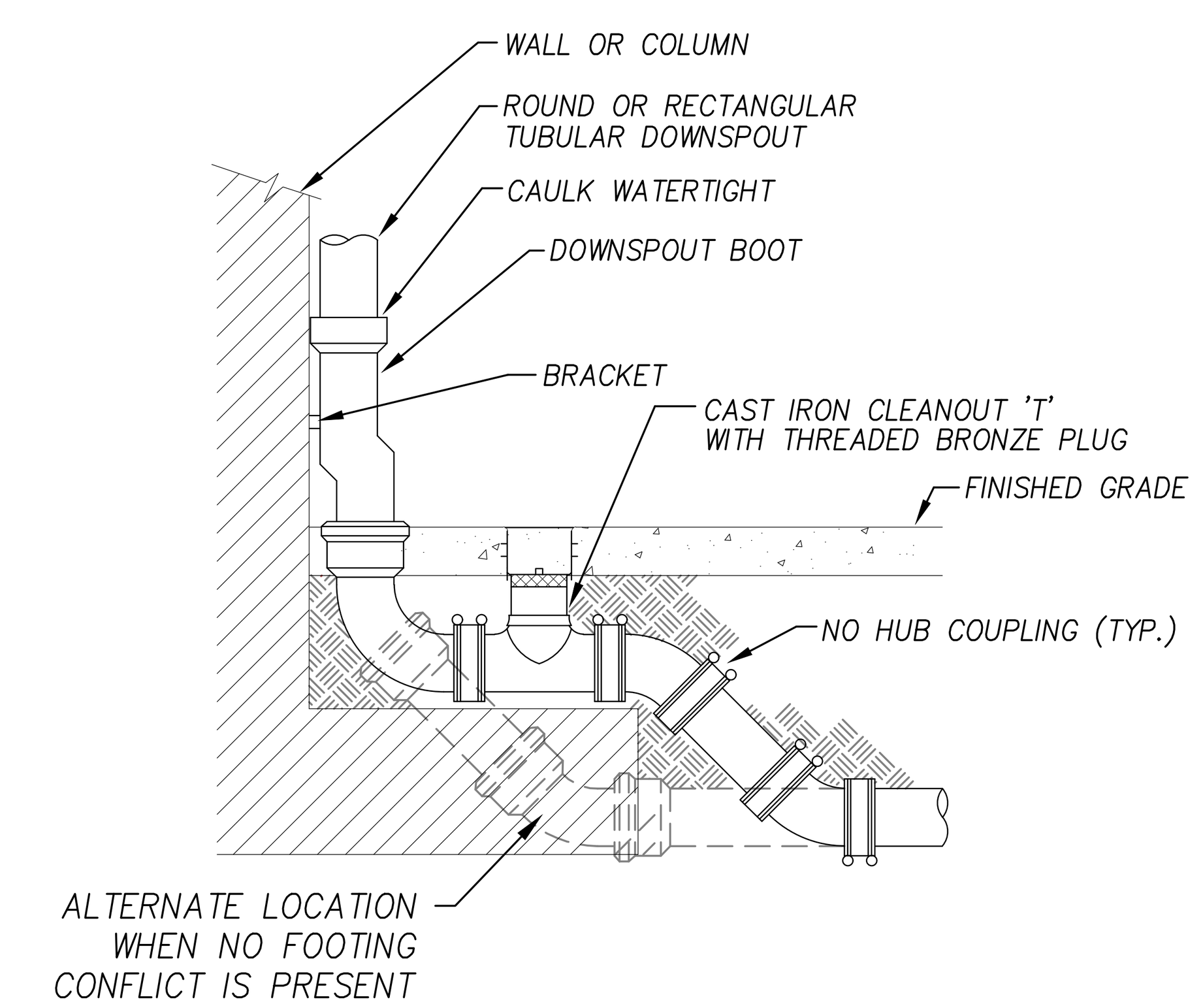

ROOF DRAIN DOWNSPOUT CONNECTION

N.T.S.

Harper **H**ouf **P**eterson **R**ighellis **I**nc.
ENGINEERS • PLANNERS
LANDSCAPE ARCHITECTS • SURVEYORS
205 SE Spokane Street, Suite 200, Portland, OR 97202
phone: 503.221.1131 www.hhpr.com fax: 503.221.1171

BID/PERMIT SET

CONDITIONAL USE NUMBER: CU2018-0016
DESIGN REVIEW NUMBER: DR2018-0114
SITE DEVELOPMENT PERMIT NUMBER: TBD
BUILDING PERMIT NUMBER: TBD

REGISTERED PROFESSIONAL ENGINEER
59,971
OREGON
JAN. 11, 2005
JANELLE LYNN BRANNAN
EXPIRES: 12/31/2019

UTILITY DETAILS
ACMA
BEAVERTON SCHOOL DISTRICT

C5.12
74-18109-00
03/14/19
REVISIONS

DLR Group
Architecture Planning Interiors

© 2018, DLR Group Architecture & Planning inc., an Oregon corporation, ALL RIGHTS RESERVED

ARTS & COMMUNICATION MAGNET SCHOOL
EROSION AND SEDIMENT CONTROL PLAN

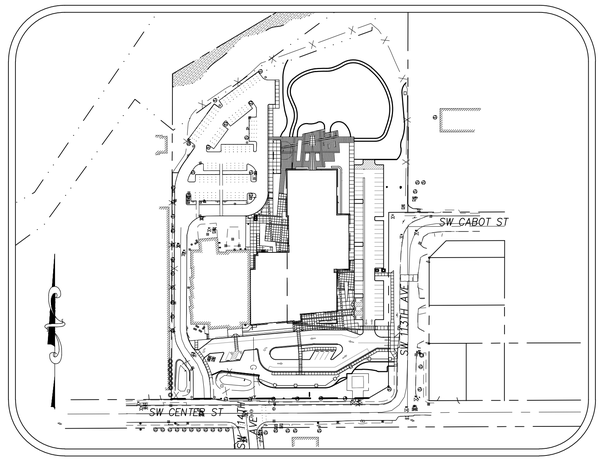

SITE MAP
NOT TO SCALE

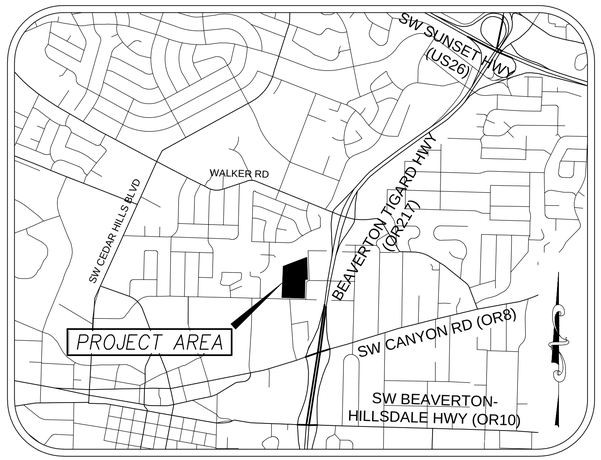

VICINITY MAP
NOT TO SCALE

SHEET INDEX

EROSION AND SEDIMENT CONTROL PLANS

EC1.0	ESC COVER SHEET
EC1.1	ESC NOTES
EC2.0	CLEARING AND DEMOLITION ESCP
EC3.0	CONSTRUCTION STAGING PLAN
EC4.0	GRADING, STREET AND UTILITY CONSTRUCTION ESCP
EC5.0	ESC DETAILS

OWNER

OWNER: BEAVERTON SCHOOL DISTRICT
CONTACT: LESLIE IMES
ADDRESS: 16550 SW MERLO RD, BEAVERTON, OR 97003
PHONE: 503-356-4575
EMAIL: LESLIE_IMES@BEAVERTON.K12.OR.US

PLANNING / ENGINEERING / SURVEYING FIRM

ENGINEERING FIRM: HARPER HOUF PETERSON RIGHELLIS INC.
CONTACT: JANELLE BRANNAN, P.E.
ADDRESS: 205 SE SPOKANE STREET STE 200
PORTLAND, OREGON 97202
PHONE: 503-221-1131
EMAIL: JANELLEB@HHPR.COM

NARRATIVE DESCRIPTIONS

EXISTING SITE CONDITIONS

* SCHOOL BUILDINGS, PARKING LOTS, PLAY FIELDS

DEVELOPED CONDITIONS

* SCHOOL BUILDINGS, PARKING LOTS, PLAY FIELDS

NATURE OF CONSTRUCTION ACTIVITY AND ESTIMATED TIME TABLE

* CLEARING (WEEK 1 – 6)
* MASS GRADING (WEEK 7 – 12)
* UTILITY INSTALLATION (WEEK 7 – 12)
* SITE CONSTRUCTION (WEEK 12 – 48)
* FINAL STABILIZATION (WEEK 49 – 54)

TOTAL SITE AREA = 9.09 ACRES
PUBLIC = 0.15 ACRES
PRIVATE = 8.94 ACRES

TOTAL DISTURBED AREA = 5.08 ACRES
PUBLIC = 0.09 ACRES
PRIVATE = 4.99 ACRES

SITE SOIL CLASSIFICATION:
PREDOMINATELY WOODBURN SILT LOAM AND ALOHA SILT LOAM.

THESE SOILS HAVE A LOW SUSCEPTIBILITY TO EROSION. EROSION CONTROL MEASURES WILL BE INSTALLED BEFORE CONSTRUCTION BEGINS.

RECEIVING WATER BODIES:

MESSINGER CREEK

PERMITTEE'S SITE INSPECTOR:

COMPANY/AGENCY: HARPER HOUF PETERSON RIGHELLIS
CONTACT: BOBBY JACOBSON
PHONE: 503-221-1131
E-MAIL: BOBBYJ@HHPR.COM
DESCRIPTION OF EXPERIENCE: 2 YEARS EXPERIENCE IN THE CONSTRUCTION INDUSTRY, INCLUDING 1 YEAR EXPERIENCE IN PROJECT MANAGEMENT AND CONSTRUCTION QA/QC; CESCL OR-101 ID #40711

PROJECT LOCATION:

11375 SW CENTER STREET
BEAVERTON, OREGON 97005
WASHINGTON COUNTY, OREGON
LATITUDE = N45-29-40, LONGITUDE = W122-47-39

PROPERTY DESCRIPTION:

TAX LOT AND MAP NO.:
TL 2000, MAP 1S 1 10 DB
EXISTING USE: MIDDLE & HIGH SCHOOL (ARTS)
EXISTING ZONE DESIGNATION: R2
SITE AREA: 8.94 AC.

ATTENTION EXCAVATORS:

OREGON LAW REQUIRES YOU TO FOLLOW RULES ADOPTED BY THE OREGON UTILITY NOTIFICATION CENTER. THOSE RULES ARE SET FORTH IN OAR 952-001-0010 THROUGH OAR 952-001-0090. YOU MAY OBTAIN COPIES OF THESE RULES FROM THE CENTER BY CALLING 503-232-1987. IF YOU HAVE ANY QUESTIONS ABOUT THE RULES, YOU MAY CONTACT THE CENTER. YOU MUST NOTIFY THE CENTER AT LEAST TWO BUSINESS DAYS, BEFORE COMMENCING AN EXCAVATION. CALL 503-246-6699.

STANDARD EROSION AND SEDIMENT CONTROL PLAN DRAWING NOTES:

1. ALL PERMIT REGISTRANTS MUST IMPLEMENT THE ESCP. FAILURE TO IMPLEMENT ANY OF THE CONTROL MEASURES OR PRACTICES DESCRIBED IN THE ESCP IS A VIOLATION OF THE PERMIT. (SCHEDULE A 8.A)
2. THE ESCP MEASURES SHOWN ON THIS PLAN ARE MINIMUM REQUIREMENTS FOR ANTICIPATED SITE CONDITIONS. DURING THE CONSTRUCTION PERIOD, UPGRADE THESE MEASURES AS NEEDED TO COMPLY WITH ALL APPLICABLE LOCAL, STATE, AND FEDERAL EROSION AND SEDIMENT CONTROL REGULATIONS. (SCHEDULE A.8.C.II.(1)(C))
3. SUBMISSION OF ALL ESCP REVISIONS IS NOT REQUIRED. SUBMITTAL OF THE ESCP REVISIONS IS ONLY UNDER SPECIFIC CONDITIONS. SUBMIT ALL NECESSARY REVISION TO DEQ OR AGENT. (SCHEDULE A.12.C.IV)
4. PHASE CLEARING AND GRADING TO THE MAXIMUM EXTENT PRACTICAL TO PREVENT EXPOSED INACTIVE AREAS FROM BECOMING A SOURCE OF EROSION. (SCHEDULE A 8.C.II.(1)(D))
5. IDENTIFY, MARK, AND PROTECT (BY FENCING OFF OR OTHER MEANS) CRITICAL RIPARIAN AREAS AND VEGETATION INCLUDING IMPORTANT TREES AND ASSOCIATED ROOTING ZONES, AND VEGETATION AREAS TO BE PRESERVED. IDENTIFY VEGETATIVE BUFFER ZONES BETWEEN THE SITE AND SENSITIVE AREAS (E.G., WETLANDS), AND OTHER AREAS TO BE PRESERVED, ESPECIALLY IN PERIMETER AREAS. (SCHEDULE A.8.C.I.(1) & (2))
6. PRESERVE EXISTING VEGETATION WHEN PRACTICAL AND RE-VEGETATE OPEN AREAS. RE-VEGETATE OPEN AREAS WHEN PRACTICABLE BEFORE AND AFTER GRADING OR CONSTRUCTION. IDENTIFY THE TYPE OF VEGETATIVE SEED MIX USED. (SCHEDULE A.7.A.V.(1) AND A.7.A.V.(3))
7. EROSION AND SEDIMENT CONTROL MEASURES INCLUDING PERIMETER SEDIMENT CONTROL MUST BE IN PLACE BEFORE VEGETATION IS DISTURBED AND MUST REMAIN IN PLACE AND BE MAINTAINED, REPAIRED, AND PROMPTLY IMPLEMENTED FOLLOWING PROCEDURES ESTABLISHED FOR THE DURATION OF CONSTRUCTION, INCLUDING PROTECTION FOR ACTIVE STORM DRAIN INLETS AND CATCH BASINS AND APPROPRIATE NON-STORMWATER POLLUTION CONTROLS. (SCHEDULE A.7.D.I AND A.8.C)
8. ESTABLISH CONCRETE TRUCK AND OTHER CONCRETE EQUIPMENT WASHOUT AREAS BEFORE BEGINNING CONCRETE WORK. DIRECT ALL WASH WATER INTO A PIT OR LEAK-PROOF CONTAINER. HANDLE WASH WATER AS WASTE, CONCRETE DISCHARGE TO WATERS OF THE STATE IS PROHIBITED. (SCHEDULE A.8.C.I.(6) AND A.8.C.II.(2))
9. APPLY TEMPORARY AND/OR PERMANENT SOIL STABILIZATION MEASURES IMMEDIATELY ON ALL DISTURBED AREAS AS GRADING PROGRESSES AND FOR ALL ROADWAYS INCLUDING GRAVEL ROADWAYS. (SCHEDULE A.8.C.II.(3))
10. ESTABLISH MATERIAL AND WASTE STORAGE AREAS, AND OTHER NON-STORMWATER CONTROLS. (SCHEDULE A.8.C.I.(7))
11. PREVENT TRACKING OF SEDIMENT ONTO PUBLIC OR PRIVATE ROADS USING BMPS SUCH AS: GRAVELED (OR PAVED) EXITS AND PARKING AREAS, GRAVEL ALL UNPAVED ROADS LOCATED ONSITE, OR USE AN EXIT TIRE WASH. THESE BMPS MUST BE IN PLACE PRIOR TO LAND-DISTURBING ACTIVITIES. (SCHEDULE A 7.D.II. AND A.8.C.I(4))
12. WHEN TRUCKING SATURATED SOILS FROM THE SITE, EITHER USE WATER-TIGHT TRUCKS OR DRAIN LOADS ON SITE. (SCHEDULE A.7.D.II.(5))
13. USE BMPS TO PREVENT OR MINIMIZE STORMWATER EXPOSURE TO POLLUTANTS FROM SPILLS; VEHICLE AND EQUIPMENT FUELING, MAINTENANCE, AND STORAGE; OTHER CLEANING AND MAINTENANCE ACTIVITIES; AND WASTE HANDLING ACTIVITIES. THESE POLLUTANTS INCLUDE FUEL, HYDRAULIC FLUID, AND OTHER OILS FROM VEHICLES AND MACHINERY, AS WELL AS DEBRIS, LEFTOVER PAINTS, SOLVENTS, AND GLUES FROM CONSTRUCTION OPERATIONS. (SCHEDULE A.7.E.I.(2))
14. IMPLEMENT THE FOLLOWING BMPS WHEN APPLICABLE: WRITTEN SPILL PREVENTION AND RESPONSE PROCEDURES, EMPLOYEE TRAINING ON SPILL PREVENTION AND PROPER DISPOSAL PROCEDURES, SPILL KITS IN ALL VEHICLES, REGULAR MAINTENANCE SCHEDULE FOR VEHICLES AND MACHINERY, MATERIAL DELIVERY AND STORAGE CONTROLS, TRAINING AND SIGNAGE, AND COVERED STORAGE AREAS FOR WASTE AND SUPPLIES. (SCH A 7.E.III.)
15. USE WATER, SOIL-BINDING AGENT OR OTHER DUST CONTROL TECHNIQUE AS NEEDED TO AVOID WIND-BLOWN SOIL. (SCHEDULE A 7.A.IV)
16. THE APPLICATION RATE OF FERTILIZERS USED TO REESTABLISH VEGETATION MUST FOLLOW MANUFACTURER'S RECOMMENDATIONS TO MINIMIZE NUTRIENT RELEASES TO SURFACE WATERS. EXERCISE CAUTION WHEN USING TIME-RELEASE FERTILIZERS WITHIN ANY WATERWAY RIPARIAN ZONE. (SCHEDULE A.9.B.III)
17. IF A STORMWATER TREATMENT SYSTEM (FOR EXAMPLE, ELECTRO-COAGULATION, FLOCCULATION, FILTRATION, ETC.) FOR SEDIMENT OR OTHER POLLUTANT REMOVAL IS EMPLOYED, SUBMIT AN OPERATION AND MAINTENANCE PLAN (INCLUDING SYSTEM SCHEMATIC, LOCATION OF SYSTEM, LOCATION OF INLET, LOCATION OF DISCHARGE, DISCHARGE DISPERSION DEVICE DESIGN, AND A SAMPLING PLAN AND FREQUENCY) BEFORE OPERATING THE TREATMENT SYSTEM. OBTAIN PLAN APPROVAL BEFORE OPERATING THE TREATMENT SYSTEM. OPERATE AND MAINTAIN THE TREATMENT SYSTEM ACCORDING TO MANUFACTURER'S SPECIFICATIONS. (SCHEDULE A.9.D)
18. TEMPORARILY STABILIZE SOILS AT THE END OF THE SHIFT BEFORE HOLIDAYS AND WEEKENDS, IF NEEDED. THE REGISTRANT IS RESPONSIBLE FOR ENSURING THAT SOILS ARE STABLE DURING RAIN EVENTS AT ALL TIMES OF THE YEAR. (SCHEDULE A 7.A.II)
19. AT THE END OF EACH WORKDAY SOIL STOCKPILES MUST BE STABILIZED OR COVERED, OR OTHER BMPS MUST BE IMPLEMENTED TO PREVENT DISCHARGES TO SURFACE WATERS OR CONVEYANCE SYSTEMS LEADING TO SURFACE WATERS. (SCHEDULE A 7.E.II.(2))
20. CONSTRUCTION ACTIVITIES MUST AVOID OR MINIMIZE EXCAVATION AND CREATION OF BARE GROUND DURING WET WEATHER. (SCHEDULE A.7.A.I)
21. SEDIMENT FENCE: REMOVE TRAPPED SEDIMENT BEFORE IT REACHES ONE THIRD OF THE ABOVE GROUND FENCE HEIGHT AND BEFORE FENCE REMOVAL. (SCHEDULE A.9.C.I)
22. OTHER SEDIMENT BARRIERS (SUCH AS BIOBAGS): REMOVE SEDIMENT BEFORE IT REACHES TWO INCHES DEPTH ABOVE GROUND HEIGHT. AND BEFORE BMP REMOVAL. (SCHEDULE A.9.C.II)
23. CATCH BASINS: CLEAN BEFORE RETENTION CAPACITY HAS BEEN REDUCED BY FIFTY PERCENT. SEDIMENT BASINS AND SEDIMENT TRAPS: REMOVE TRAPPED SEDIMENTS BEFORE DESIGN CAPACITY HAS BEEN REDUCED BY FIFTY PERCENT AND AT COMPLETION OF PROJECT. (SCHEDULE A.9.C.III & IV)
24. WITHIN 24 HOURS, SIGNIFICANT SEDIMENT THAT HAS LEFT THE CONSTRUCTION SITE, MUST BE REMEDIATED. INVESTIGATE THE CAUSE OF THE SEDIMENT RELEASE AND IMPLEMENT STEPS TO PREVENT A RECURRENCE OF THE DISCHARGE WITHIN THE SAME 24 HOURS. ANY IN-STREAM CLEAN UP OF SEDIMENT SHALL BE PERFORMED ACCORDING TO THE OREGON DIVISION OF STATE LANDS REQUIRED TIMEFRAME. (SCHEDULE A.9.B.I)
25. THE INTENTIONAL WASHING OF SEDIMENT INTO STORM SEWERS OR DRAINAGE WAYS MUST NOT OCCUR. VACUUMING OR DRY SWEEPING AND MATERIAL PICKUP MUST BE USED TO CLEANUP RELEASED SEDIMENTS. (SCHEDULE A.9.B.II)
26. THE ENTIRE SITE MUST BE TEMPORARILY STABILIZED USING VEGETATION OR A HEAVY MULCH LAYER, TEMPORARY SEEDING, OR OTHER METHOD SHOULD ALL CONSTRUCTION ACTIVITIES CEASE FOR 30 DAYS OR MORE. (SCHEDULE A.7.F.I)
27. PROVIDE TEMPORARY STABILIZATION FOR THAT PORTION OF THE SITE WHERE CONSTRUCTION ACTIVITIES CEASE FOR 14 DAYS OR MORE WITH A COVERING OF BLOWN STRAW AND A TACKIFIER, LOOSE STRAW, OR AN ADEQUATE COVERING OF COMPOST MULCH UNTIL WORK RESUMES ON THAT PORTION OF THE SITE. (SCHEDULE A.7.F.II)
28. PROVIDE PERMANENT EROSION CONTROL MEASURES ON ALL EXPOSED AREAS. DO NOT REMOVE TEMPORARY SEDIMENT CONTROL PRACTICES UNTIL PERMANENT VEGETATION OR OTHER COVER OF EXPOSED AREAS IS ESTABLISHED. HOWEVER, DO REMOVE ALL TEMPORARY EROSION CONTROL MEASURES AS EXPOSED AREAS BECOME STABILIZED, UNLESS DOING SO CONFLICTS WITH LOCAL REQUIREMENTS. PROPERLY DISPOSE OF CONSTRUCTION MATERIALS AND WASTE, INCLUDING SEDIMENT RETAINED BY TEMPORARY BMPS. (SCHEDULE A.7.A.V(2) AND A.8.C.III)
29. IF WATER OF THE STATE IS WITHIN THE PROJECT SITE OR WITHIN 50 FEET OF THE PROJECT BOUNDARY, MAINTAIN THE EXISTING NATURAL BUFFER WITHIN THE 50-FOOT ZONE FOR THE DURATION OF THE PERMIT COVERAGE, OR MAINTAIN LESS THAN THE ENTIRE EXISTING NATURAL BUFFER AND PROVIDE ADDITIONAL EROSION AND SEDIMENT CONTROL BMPS. (SCHEDULE A.7.B.I)

LOCAL AGENCY-SPECIFIC EROSION CONTROL NOTES:

1. IF VEGETATIVE SEED MIXES ARE SPECIFIED, SEEDING MUST TAKE PLACE NO LATER THAT SEPTEMBER 1; THE TYPE AND PERCENTAGES OF SEED IN THE MIX MUST BE IDENTIFIED ON THE PLANS.
2. ALL PUMPING OF SEDIMENT LADEN WATER SHALL BE DISCHARGED OVER AN UNDISTURBED, PREFERABLY VEGETATED AREA, AND THROUGH A SEDIMENT CONTROL BMP I.E. (FILTER BAG).
3. ALL EXPOSED SOILS MUST BE COVERED DURING THE WET WEATHER PERIOD, OCTOBER 01 – MAY 31.

THE PERMITTEE IS REQUIRED TO MEET ALL THE CONDITIONS OF THE 1200-C PERMIT. THIS ESCP AND GENERAL CONDITIONS HAVE BEEN DEVELOPED TO FACILITATE COMPLIANCE WITH THE 1200-C PERMIT REQUIREMENTS. IN CASES OF DISCREPANCIES OR OMISSIONS, THE 1200-C PERMIT REQUIREMENTS SUPERCEDE REQUIREMENTS OF THIS PLAN.

BMP MATRIX FOR CONSTRUCTION PHASES

REFER TO DEQ GUIDANCE MANUAL FOR A COMPREHENSIVE LIST OF AVAILABLE BMPs.

	CLEARING	MASS GRADING	UTILITY INSTALLATION	SITE CONSTRUCTION	FINAL STABILIZATION	WET WEATHER (OCT. 1 - MAY 31ST)
EROSION PREVENTION						
PRESERVE NATURAL VEGETATION	X	X	X	X	X	X
GROUND COVER					X	X
HYDRAULIC APPLICATIONS						
PLASTIC SHEETING						X
MATTING				X	X	X
DUST CONTROL	X	X	X	X	X	X
TEMPORARY/PERMANENT SEEDING		X	X	X	X	X
BUFFER ZONE						
OTHER:						
SEDIMENT CONTROL						
SEDIMENT FENCE (PERIMETER)	X	X	X	X	X	X
SEDIMENT FENCE (INTERIOR)			X	X	X	X
STRAW WATTLES						
FILTER BERM						
INLET PROTECTION	X	X	X	X	X	X
DEWATERING						
SEDIMENT TRAP						
NATURAL BUFFER ENCROACHMENT						
OTHER:						
RUN OFF CONTROL						
CONSTRUCTION ENTRANCE	X	X	X	X	X	X
PIPE SLOPE DRAIN						
OUTLET PROTECTION	X	X	X	X	X	X
SURFACE ROUGHENING						
CHECK DAMS						
OTHER:						
POLLUTION PREVENTION						
PROPER SIGNAGE	X	X	X	X	X	X
HAZ WASTE MGMT	X	X	X	X	X	X
SPILL KIT ON-SITE	X	X	X	X	X	X
CONCRETE WASHOUT AREA	X	X	X	X	X	X
OTHER:						

* SIGNIFIES ADDITIONAL BMPs REQUIRED FOR WORK WITHIN 50' OF WATER OF THE STATE.
** SIGNIFIES BMP THAT WILL BE INSTALLED PRIOR TO ANY GROUND DISTURBING ACTIVITY.

RATIONALE STATEMENT

A COMPREHENSIVE LIST OF AVAILABLE BEST MANAGEMENT PRACTICES (BMP) OPTIONS BASED ON DEQ'S GUIDANCE MANUAL HAS BEEN REVIEWED TO COMPLETE THIS EROSION AND SEDIMENT CONTROL PLAN. SOME OF THE ABOVE LISTED BMP'S WERE NOT CHOSEN BECAUSE THEY WERE DETERMINED TO NOT EFFECTIVELY MANAGE EROSION PREVENTION AND SEDIMENT CONTROL FOR THIS PROJECT BASED ON SPECIFIC SITE CONDITIONS, INCLUDING SOIL CONDITIONS TOPOGRAPHIC CONSTRAINTS, ACCESSIBILITY TO THE SITE, AND OTHER RELATED CONDITIONS, AS THE PROJECT PROGRESSES AND THERE IS A NEED TO REVISE THE ESC PLAN, AN ACTION PLAN WILL BE SUBMITTED.

INITIAL _____

INSPECTION FREQUENCY:

SITE CONDITION	MINIMUM FREQUENCY
1. ACTIVE PERIOD	DAILY WHEN STORMWATER RUNOFF, INCLUDING RUNOFF FROM SNOW MELT, IS OCCURING. AT LEAST ONCE EVERY FOURTEEN (14) CALENDAR DAYS REGARDLESS OF WHETHER STORMWATER RUNOFF IS OCCURING.
2. PRIOR TO THE SITE BECOMING INACTIVE OR IN ANTICIPATION OF SITE INACCESSIBILITY.	ONCE TO ENSURE THAT EROSION AND SEDIMENT CONTROL MEASURES ARE IN WORKING ORDER. ANY NECESSARY MAINTENANCE AND REPAIR MUST BE MADE PRIOR TO LEAVING THE SITE.
3. INACTIVE PERIODS GREATER THAN FOURTEEN (14) CONSECUTIVE CALENDAR DAYS.	ONCE EVERY MONTH.
4. PERIODS DURING WHICH THE SITE IS INACCESSIBLE DUE TO INCLEMENT WEATHER.	IF PRACTICAL, INSPECTIONS MUST OCCUR DAILY AT A RELEVANT AND ACCESSIBLE DISCHARGE POINT OR DOWNSTREAM LOCATION.
5. PERIODS DURING WHICH DISCHARGE IS UNLIKELY DUE TO FROZEN CONDITIONS.	MONTHLY, RESUME MONITORING IMMEDIATELY UPON MELT, OR WHEN WEATHER CONDITIONS MAKE DISCHARGES LIKELY.

* HOLD A PRE-CONSTRUCTION MEETING OF PROJECT CONSTRUCTION PERSONNEL THAT INCLUDES THE INSPECTOR TO DISCUSS EROSION AND SEDIMENT CONTROL MEASURES AND CONSTRUCTION LIMITS. (Schedule A.8.c.i.(3))
* ALL INSPECTIONS MUST BE MADE IN ACCORDANCE WITH DEQ 1200-C PERMIT REQUIREMENTS.
* INSPECTION LOGS MUST BE KEPT IN ACCORDANCE WITH DEQ'S 1200-C PERMIT REQUIREMENTS.
* RETAIN A COPY OF THE ESCP AND ALL REVISIONS ON SITE AND MAKE IT AVAILABLE ON REQUEST TO DEQ, AGENT, OR THE LOCAL MUNICIPALITY. DURING INACTIVE PERIODS OF GREATER THAN SEVEN (7) CONSECUTIVE CALENDAR DAYS, RETAIN THE ESCP AT THE CONSTRUCTION SITE OR AT ANOTHER LOCATION. (Schedule B.2.a)

Harper Houf Peterson Righellis Inc.
ENGINEERS • PLANNERS
LANDSCAPE ARCHITECTS • SURVEYORS
205 SE Spokane Street, Suite 200, Portland, OR 97202
phone: 503.221.1131 www.hhpr.com fax: 503.221.1171

BID/PERMIT SET

CONDITIONAL USE NUMBER: CU2018-0016
DESIGN REVIEW NUMBER: DR2018-0114
SITE DEVELOPMENT PERMIT NUMBERS: TBD
BUILDING PERMIT NUMBER: TBD

REGISTERED PROFESSIONAL ENGINEER
59,971
OREGON
JANUARY 11, 2005
JANELLE LYNN BRANNAN

EXPIRES: 12/31/2019

BEAVERTON SCHOOL DISTRICT
ACMA
ESC COVER SHEET

EC1.0
74-18109-00
03/14/19
REVISIONS

DLR Group
Architecture Planning Interiors

© 2018, DLR Group Architecture & Planning Inc., an Oregon corporation, ALL RIGHTS RESERVED

CITY OF BEAVERTON EROSION CONTROL NOTES:

1. CONTRACTOR SHALL INSTALL AND MAINTAIN EROSION / SEDIMENTATION CONTROL DURING CONSTRUCTION (ANY TIME OF THE YEAR), PER THE 'EROSION PREVENTION AND SEDIMENT CONTROL PLANNING AND DESIGN MANUAL: DATED DEC. 2000 AND CLEAN WATER SERVICES DESIGN AND CONSTRUCTION STANDARDS, R&O 07-20, CHAPTER 6.
2. APPROVAL OF THIS EROSION / SEDIMENTATION CONTROL (ESC) PLAN DOES NOT CONSTITUTE AN APPROVAL OF PERMANENT ROAD OR DRAINAGE DESIGN (E.G., SIZE AND LOCATION OF ROADS, PIPES, RESTRICTORS, CHANNELS, RETENTION FACILITIES, UTILITIES, ETC.)
3. THE IMPLEMENTATION OF THESE ESC PLANS AND CONSTRUCTION, MAINTENANCE, REPLACEMENT AND UPGRADING OF THESE ESC FACILITIES IS THE RESPONSIBILITY OF THE CONTRACTOR UNTIL ALL CONSTRUCTION IS COMPLETED AND APPROVED BY THE CITY OF BEAVERTON AND VEGETATION / LANDSCAPING IS ESTABLISHED. THE DEVELOPER SHALL BE RESPONSIBLE FOR MAINTENANCE OF ESC AFTER THE PROJECT IS APPROVED AND UNTIL THE LOTS ARE SOLD.
4. THE BOUNDARIES OF THE CLEARING LIMITS SHOWN ON THIS PLAN SHALL BE CLEARLY FLAGGED IN THE FIELD PRIOR TO CONSTRUCTION. DURING THE CONSTRUCTION PERIOD, NO DISTURBANCE BEYOND THE FLAGGED CLEARING SHALL BE PERMITTED. THE FLAGGING SHALL BE MAINTAINED BY THE APPLICANT / CONTRACTOR FOR THE DURATION OF THE CONSTRUCTION.
5. THE ESC FACILITIES SHOWN ON THIS PLAN MUST BE CONSTRUCTED IN CONJUNCTION WITH ALL CLEARING AND GRADING ACTIVITIES, AND IN SUCH A MANNER AS TO ENSURE THAT SEDIMENT AND SEDIMENT-LADEN WATER DOES NOT ENTER THE DRAINAGE SYSTEM, ROADWAYS, OR VIOLATE APPLICABLE WATER STANDARDS.
6. THE ESC FACILITIES SHOWN ON THIS PLAN ARE MINIMUM REQUIREMENTS FOR ANTICIPATED SITE CONDITIONS. DURING CONSTRUCTION PERIOD, THESE ESC FACILITIES SHALL BE UPGRADED AS NEEDED FOR UNEXPECTED STORM EVENTS AND TO ENSURE THAT SEDIMENT AND SEDIMENT-LADEN WATER DOES NOT LEAVE THE SITE.
7. THE ESC FACILITIES SHALL BE INSPECTED DAILY BY THE APPLICANT / CONTRACTOR AND MAINTAINED AS NECESSARY TO ENSURE THEIR CONTINUED FUNCTIONING.
8. THE ESC FACILITIES ON INACTIVE SITES SHALL BE INSPECTED AND MAINTAINED A MINIMUM OF ONCE EVERY TWO WEEKS OR WITHIN 24 HOURS FOLLOWING A STORM EVENT.
9. REMOVAL OF TRAPPED SEDIMENT IN A SEDIMENT BASIN OR SEDIMENT TRAP MUST OCCUR WHEN THE SEDIMENT RETENTION CAPACITY HAS BEEN REDUCED BY FIFTY (50) PERCENT AND AT COMPLETION OF PROJECT.
10. STABILIZED GRAVEL ENTRANCES SHALL BE INSTALLED AT THE BEGINNING OF CONSTRUCTION AND MAINTAINED FOR THE DURATION OF THE PROJECT. ADDITIONAL MEASURES MAY BE REQUIRED TO INSURE THAT ALL PAVED AREAS ARE KEPT CLEAN FOR THE DURATION OF THE PROJECT.
11. STORM DRAIN INLETS, BASINS AND AREA DRAINS SHALL BE PROTECTED UNTIL PAVEMENT SURFACES ARE COMPLETED AND / OR VEGETATION IS RE-ESTABLISHED.
12. PAVEMENT SURFACES AND VEGETATION ARE TO BE PLACED AS RAPIDLY AS POSSIBLE.
13. SEEDING SHALL BE PERFORMED NO LATER THAN SEPTEMBER 1ST FOR EACH PHASE OF CONSTRUCTION.
14. IF THERE ARE EXPOSED SOILS, OR SOILS ARE NOT FULLY ESTABLISHED FROM OCTOBER 1ST THROUGH MAY 31ST, THE WET WEATHER EROSION CONTROL MEASURES WILL BE IN EFFECT. SEE CHAPTER 6 OF THE EROSION PREVENTION AND SEDIMENT CONTROL PLANNING AND DESIGN MANUAL FOR REQUIREMENTS.
15. ESC MEASURES SHALL BE REMOVED BY THE DEVELOPER / OWNER WHEN VEGETATION IS FULLY ESTABLISHED.
16. NOTIFY CITY OF BEAVERTON CONSTRUCTION INSPECTOR 24 HOURS PRIOR TO ANY WORK ON THIS SITE.

WET WEATHER EROSION CONTROL NOTES:

ON SEPTEMBER 1ST OF EACH YEAR, IF THERE ARE EXPOSED SOILS, DISTURBED AREAS, OR GROUND-COVER VEGETATION NOT FULLY ESTABLISHED SUFFICIENT TO PREVENT EROSION, A SPECIFIC EROSION CONTROL PLAN SHALL BE PREPARED BASED ON THE EXISTING AND EXPECTED SITE CONDITIONS USING THE WET WEATHER EROSION PREVENTION MEASURES (SEE EROSION PREVENTION AND SEDIMENT CONTROL PLANNING AND DESIGN MANUAL CHAPTER 4 FOR REQUIREMENTS). FOR SURFACE WATER FACILITIES, FIBER MATTING SHALL BE INSTALLED IN ALL AREAS EXPOSED TO WATER FLOW OR INUNDATION; FREE-FLOATING MULCH SHALL NOT BE USED IN AREAS SUBJECT TO INUNDATION. FIBER MATTING SHALL EITHER BE SEEDED (PER THE DESIGN) OR PLACED PRIOR TO PLANTING OF THE PLUGS, CUTTINGS, REEDS, RUSHES, OR SHRUBS. ALL MEASURES AND SPECIFICATIONS FOR MATERIALS USED SHALL BE PER PLAN OR AS SPECIFICALLY APPROVED BY THE ENGINEER AND CITY INSPECTOR. IF ANY ADDITIONAL AREAS BECOME EXPOSED, DISTURBED, OR STRIPPED OF VEGETATION BETWEEN OCTOBER 1ST AND MAY 31ST, THE PLAN SHALL BE REVISED OR OTHERWISE EXPANDED PER THE STANDARDS AND AS DIRECTED BY THE ENGINEER AND CITY INSPECTOR. PRIOR TO OCTOBER 1ST OF EACH YEAR, WET WEATHER MEASURES SHALL BE INSTALLED AND FULLY FUNCTIONAL.

HHPR Harper Houf Peterson Righellis Inc.
ENGINEERS • PLANNERS
LANDSCAPE ARCHITECTS • SURVEYORS
205 SE Spokane Street, Suite 200, Portland, OR 97202
phone: 503.221.1131 www.hhpr.com fax: 503.221.1171

BID/PERMIT SET

CONDITIONAL USE NUMBER: CU2018-0016
DESIGN REVIEW NUMBER: DR2018-0114
SITE DEVELOPMENT PERMIT NUMBER: TBD
BUILDING PERMIT NUMBER: TBD

REGISTERED PROFESSIONAL ENGINEER
59,971
OREGON
JUNE 11, 2005
JANELLE LYNN BRANNAN

EXPIRES: 12/31/2019

BEAVERTON SCHOOL DISTRICT

ESC NOTES
ACMA

EC1.1
74-18109-00
03/14/19
REVISIONS

DLR Group
Architecture Planning Interiors

© 2018, DLR Group Architecture & Planning Inc., an Oregon corporation, ALL RIGHTS RESERVED

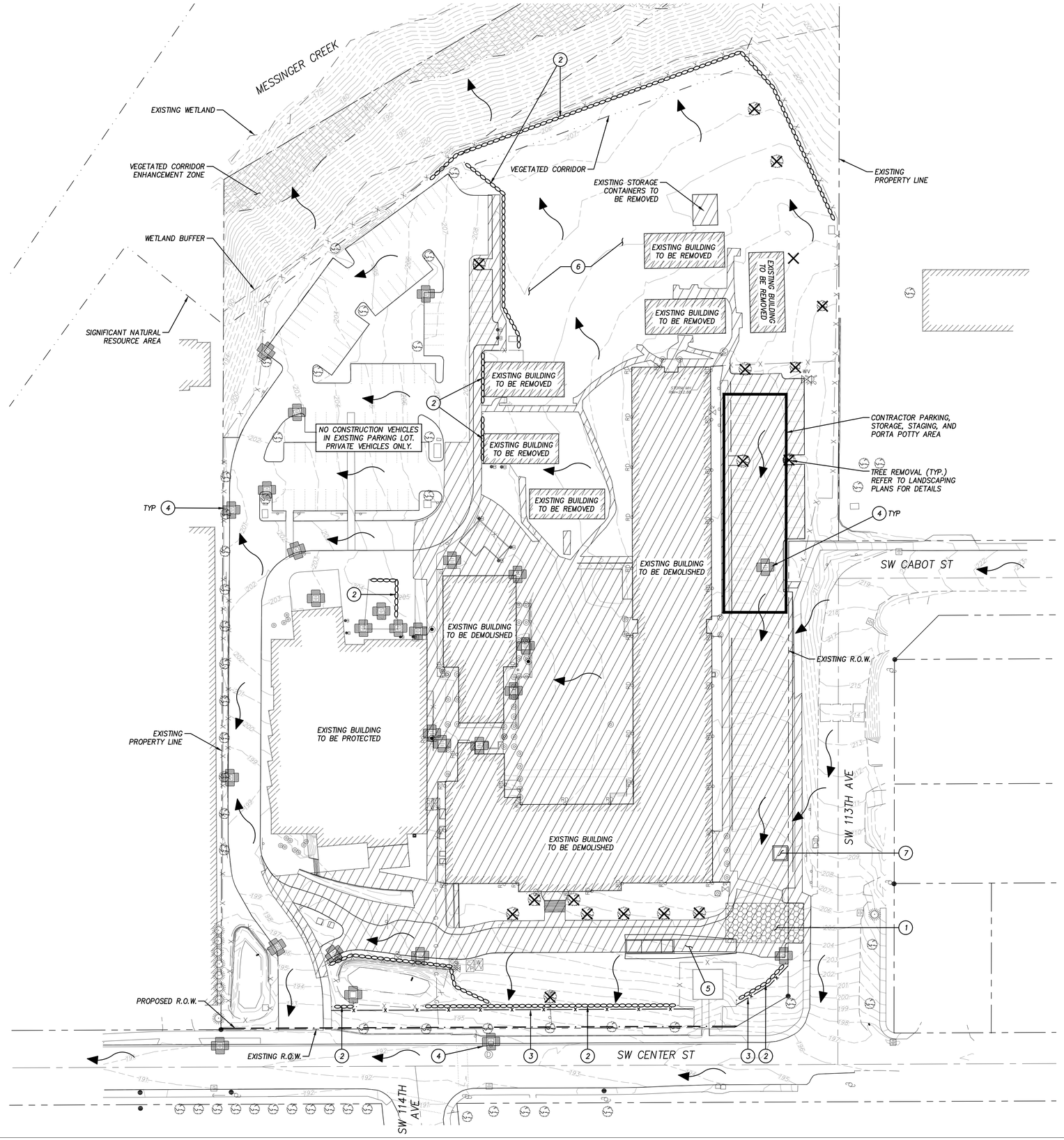

Harper
Houf **P**eterson
Righellis **I**nc.
ENGINEERS•PLANNERS
LANDSCAPE ARCHITECTS • SURVEYORS
205 SE Spokane Street, Suite 200, Portland, OR 97202
phone: 503.221.1131 www.hhpr.com fax: 503.221.1171

PRE-CONSTRUCTION, CLEARING, AND DEMOLITION NOTES:

1. ALL BASE ESC MEASURES (INLET PROTECTION, PERIMETER SEDIMENT CONTROL, GRAVEL CONSTRUCTION ENTRANCES, ETC.) MUST BE IN PLACE, FUNCTIONAL, AND APPROVED IN AN INITIAL INSPECTION, PRIOR TO COMMENCEMENT OF CONSTRUCTION ACTIVITIES.

2. SEDIMENT BARRIERS APPROVED FOR USE INCLUDE SEDIMENT FENCE, BERMS CONSTRUCTED OUT OF MULCH, CHIPPINGS, OR OTHER SUITABLE MATERIAL, STRAW WATTLES, OR OTHER APPROVED MATERIALS.

3. SENSITIVE RESOURCES INCLUDING, BUT NOT LIMITED TO, TREES, WETLANDS, AND RIPARIAN PROTECTION AREAS SHALL BE CLEARLY DELINEATED WITH ORANGE CONSTRUCTION FENCING OR CHAIN LINK FENCING IN A MANNER THAT IS CLEARLY VISIBLE TO ANYONE IN THE AREA. NO ACTIVITIES ARE PERMITTED TO OCCUR BEYOND THE CONSTRUCTION BARRIER.

4. CONSTRUCTION ENTRANCES SHALL BE INSTALLED AT THE BEGINNING OF CONSTRUCTION AND MAINTAINED FOR THE DURATION OF THE PROJECT. ADDITIONAL MEASURES INCLUDING, BUT NOT LIMITED TO, STREET SWEEPING, AND VACUUMING, MAY BE REQUIRED TO ENSURE THAT ALL PAVED AREAS ARE KEPT CLEAN FOR THE DURATION OF THE PROJECT.

5. RUN-ON AND RUN-OFF CONTROLS SHALL BE IN PLACE AND FUNCTIONING PRIOR TO BEGINNING SUBSTANTIAL CONSTRUCTION ACTIVITIES. RUN-ON AND RUN-OFF CONTROL MEASURES INCLUDE: SLOPE DRAINS (WITH OUTLET PROTECTION), CHECK DAMS, AND SURFACE ROUGHENING.

THESE EROSION AND SEDIMENT CONTROL PLANS ASSUME "DRY WEATHER" CONSTRUCTION. "WET WEATHER" CONSTRUCTION MEASURES NEED TO BE APPLIED BETWEEN OCTOBER 1ST AND MAY 31ST.

NOTE: STOCKPILING ON SITE

LEGEND:

- PERIMETER CONSTRUCTION FENCING
- FLOW ARROW
- INLET PROTECTION
- EXISTING TREE TO BE REMOVED
- CONSTRUCTION ENTRANCE
- BUILDING, ASPHALT, AND/OR CONCRETE REMOVAL
- SEDIMENT FENCE
- EXISTING CONTOUR

CONSTRUCTION NOTES:

1. INSTALL CONSTRUCTION ENTRANCE PER DETAIL 855 ON SHEET EC5.0.
2. INSTALL SEDIMENT FENCE PERIMETER CONTROL PER DETAIL 875 ON SHEET EC5.0.
3. INSTALL TEMPORARY CHAIN LINK CONSTRUCTION FENCING.
4. INSTALL INLET PROTECTION WITHIN R.O.W. PER DETAIL 920 ON SHEET EC5.0. INSTALL ALL OTHER CATCH BASIN INLET PROTECTION PER DETAIL 915 OR 920 ON SHEET EC5.0 PER CONTRACTOR'S DISCRETION.
5. INSTALL TIRE WASH FACILITY PER DETAIL 870 ON SHEET EC5.0.
6. SEED ALL DISTURBED AREAS WITHIN TWO WEEKS AND/OR PRIOR TO WET SEASON WITH TEMPORARY SEEDING.
7. INSTALL CONCRETE TRUCK WASHOUT BASIN PER DETAIL 900 ON SHEET EC5.0.

WET WEATHER NOTE:
DURING "WET WEATHER" PERIODS, STOCKPILES SHALL BE COVERED WITH PLASTIC SHEETING OR STRAW MULCH

0 20 40 80
SCALE: 1" = 40'

BID/PERMIT SET

CONDITIONAL USE NUMBER: CU2018-0016
DESIGN REVIEW NUMBER: DR2018-0114
SITE DEVELOPMENT PERMIT NUMBER: TBD
BUILDING PERMIT NUMBER: TBD

REGISTERED PROFESSIONAL ENGINEER
59,971
OREGON
JUNE 11, 2005
JANELLE LYNN BRANNAN
EXPIRES: 12/31/2019

CLEARING & DEMOLITION ESCP
ACMA
BEAVERTON SCHOOL DISTRICT

EC2.0
74-18109-00
03/14/19
REVISIONS

DLR Group
Architecture Planning Interiors

© 2018, DLR Group Architecture & Planning Inc., an Oregon corporation. ALL RIGHTS RESERVED

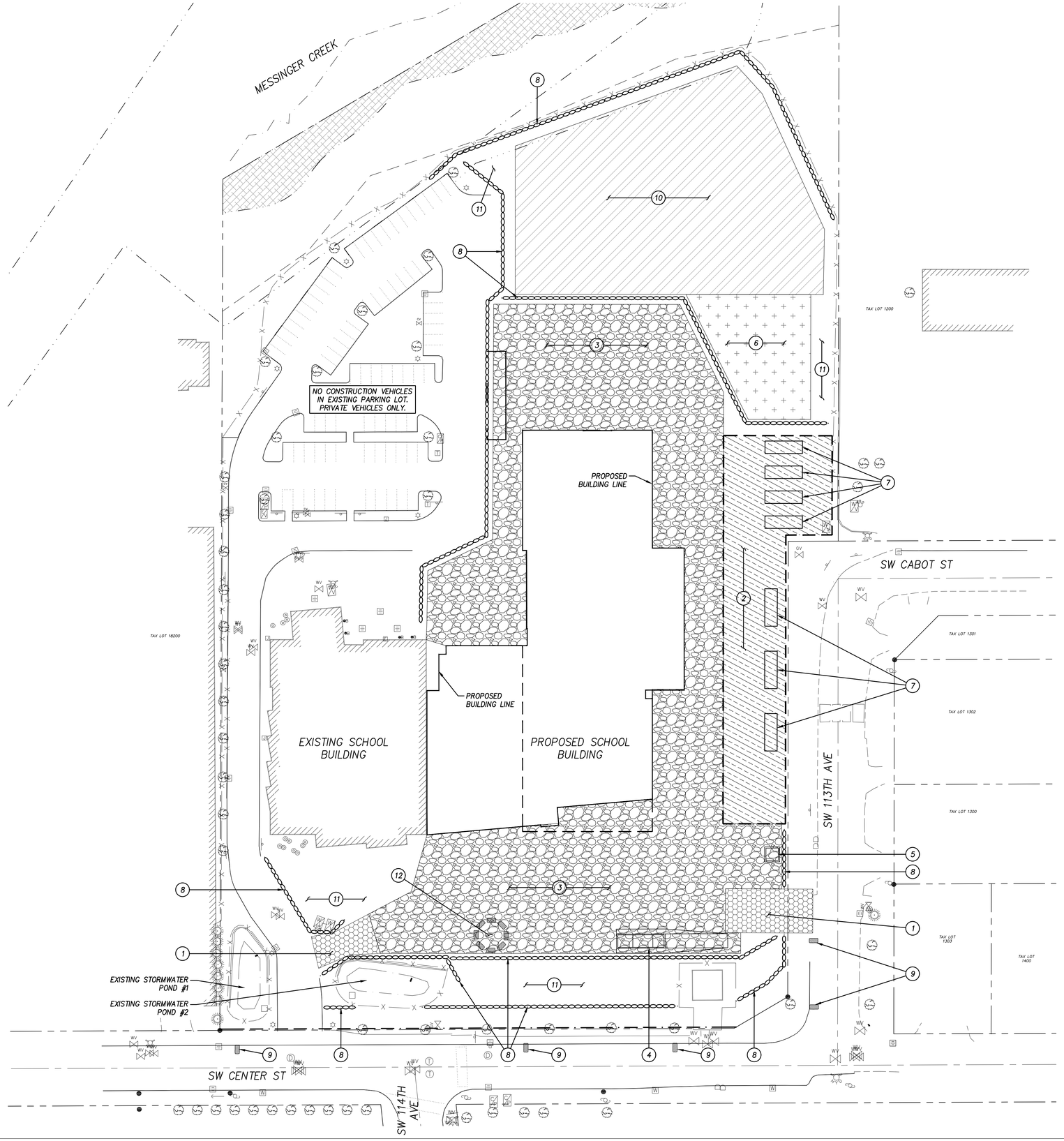

LEGEND

- CONTRACTOR PARKING AND STAGING AREA
- HAUL ROAD/STAGING AREA SURROUNDING PROPOSED BUILDING
- STOCKPILE AREA
- CONSTRUCTION ENTRANCE
- SHEETING AREA
- SEDIMENT FENCE

CONSTRUCTION NOTES:

1. INSTALL CONSTRUCTION ENTRANCE PER DETAIL 855 ON SHEET EC5.0.
2. CONSTRUCT PARKING AND STAGING AREA. INSTALL 12" CLEAN CRUSHED ROCK OVER WOVEN GEOTEXTILE FABRIC, OR AS RECOMMENDED BY GEOTECHNICAL ENGINEER.
3. CONSTRUCT HAUL ROAD. INSTALL 18" CLEAN CRUSHED ROCK OVER WOVEN GEOTEXTILE FABRIC, OR AS RECOMMENDED BY GEOTECHNICAL ENGINEER.
4. INSTALL TIRE WASH FACILITY PER DETAIL 870 ON SHEET EC5.0.
5. INSTALL CONCRETE TRUCK WASHOUT BASIN PER DETAIL ON SHEET EC5.0.
6. PROPOSED STOCKPILE LOCATION. COVER AS NECESSARY PER DETAIL 810 ON SHEET EC5.0.
7. PROPOSED LOCATION OF JOB TRAILERS.
8. INSTALL SEDIMENT FENCE PERIMETER CONTROL PER DETAIL 875 ON SHEET EC5.0.
9. INSTALL BIOBAGS IN EXISTING GUTTERLINE.
10. COVER EXPOSED SURFACE WITH SHEETING.
11. INSTALL SEEDING BETWEEN GRAVEL SURFACE AND SEDIMENT FENCE AROUND PERIMETER OF SITE. INSTALL STRAW ABOVE SEEDING DURING WET WEATHER.
12. INSTALL SEDIMENT POND AS NEEDED AT EXISTING LOW POINT.

WET WEATHER NOTE:
DURING "WET WEATHER" PERIODS, STOCKPILES SHALL BE COVERED WITH PLASTIC SHEETING OR STRAW MULCH

INSTALL TEMPORARY DRAINAGE SYSTEM AND DIRECT TOWARDS EXISTING STORMWATER POND #2 FOR RUNOFF TREATMENT DURING CONSTRUCTION

SEE SHEET EC2.0 FOR INLET PROTECTION

0 20 40 80
SCALE: 1" = 40'

Harper Houf Peterson Righellis Inc.
ENGINEERS • PLANNERS
LANDSCAPE ARCHITECTS • SURVEYORS
205 SE Spokane Street, Suite 200, Portland, OR 97202
phone: 503.221.1131 www.hhpr.com fax: 503.221.1171

BID/PERMIT SET

CONDITIONAL USE NUMBER: CU2018-0016
DESIGN REVIEW NUMBER: DR2018-0114
SITE DEVELOPMENT PERMIT NUMBER: TBD
BUILDING PERMIT NUMBER: TBD

REGISTERED PROFESSIONAL ENGINEER
59,971
OREGON
JUNE 11, 2005
JANELLE LYNN BRANNAN
EXPIRES: 12/31/2019

CONSTRUCTION STAGING PLAN
ACMA
BEAVERTON SCHOOL DISTRICT

EC3.0
74-18109-00
03/14/19
REVISIONS

DLR Group
Architecture Planning Interiors

© 2018, DLR Group Architecture & Planning Inc., an Oregon corporation, ALL RIGHTS RESERVED

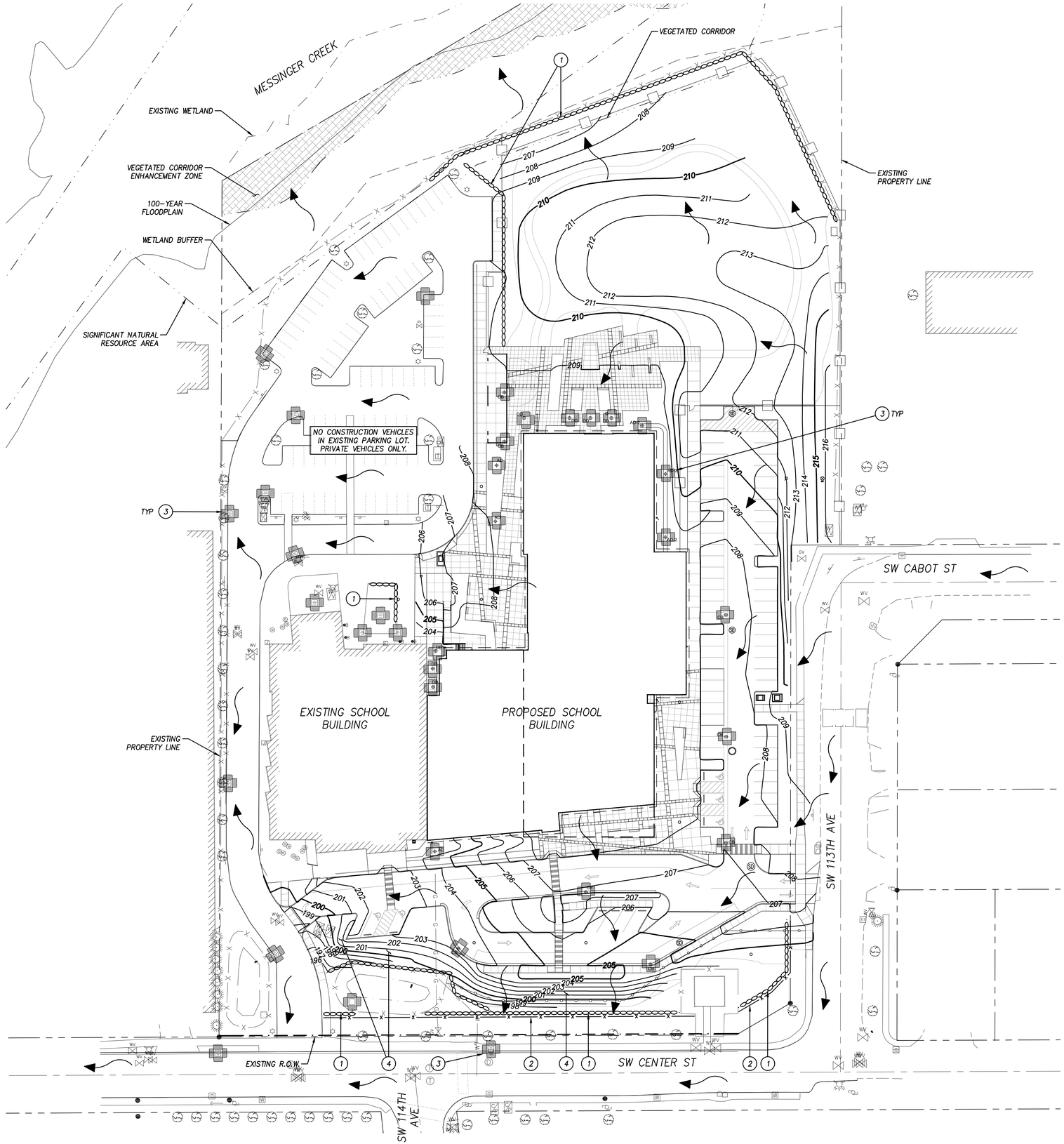

Harper
Houf **P**eterson
Righellis **I**nc.
ENGINEERS•PLANNERS
LANDSCAPE ARCHITECTS•SURVEYORS
205 SE Spokane Street, Suite 200, Portland, OR 97202
phone: 503.221.1131 www.hhpr.com fax: 503.221.1171

GRADING, STREET AND UTILITY EROSION AND SEDIMENT CONSTRUCTION NOTES:

1. SEED USED FOR TEMPORARY OR PERMANENT SEEDING SHALL BE COMPOSED OF ONE OF THE FOLLOWING MIXTURES, UNLESS OTHERWISE AUTHORIZED:
   - A. VEGETATED CORRIDOR AREAS REQUIRE NATIVE SEED MIXES. SEE RESTORATION PLAN FOR APPROPRIATE SEED MIX.
   - B. DWARF GRASS MIX (MIN. 100 LB./AC.)
     1. DWARF PERENNIAL RYEGRASS (80% BY WEIGHT)
     2. CREEPING RED FESCUE (20% BY WEIGHT)
   - C. STANDARD HEIGHT GRASS MIX (MIN. 100LB./AC.)
     1. ANNUAL RYEGRASS (40% BY WEIGHT)
     2. TURF-TYPE FESCUE (60% BY WEIGHT)
2. SLOPE TO RECEIVE TEMPORARY OR PERMANENT SEEDING SHALL HAVE THE SURFACE ROUGHENED BY MEANS OF TRACK-WALKING OR THE USE OF OTHER APPROVED IMPLEMENTS. SURFACE ROUGHENING IMPROVES SEED BEDDING AND REDUCES RUN-OFF VELOCITY.
3. LONG TERM SLOPE STABILIZATION MEASURES SHALL INCLUDE THE ESTABLISHMENT OF PERMANENT VEGETATIVE COVER VIA SEEDING WITH APPROVED MIX AND APPLICATION RATE.
4. TEMPORARY SLOPE STABILIZATION MEASURES SHALL INCLUDE: COVERING EXPOSED SOIL WITH PLASTIC SHEETING, STRAW MULCHING, WOOD CHIPS, OR OTHER APPROVED MEASURES.
5. STOCKPILED SOIL OR STRIPPINGS SHALL BE PLACED IN A STABLE LOCATION AND CONFIGURATION. DURING "WET WEATHER" PERIODS, STOCKPILES SHALL BE COVERED WITH PLASTIC SHEETING OR STRAW MULCH. SEDIMENT FENCE IS REQUIRED AROUND THE PERIMETER OF THE STOCKPILE.
6. EXPOSED CUT OR FILL AREAS SHALL BE STABILIZED THROUGH THE USE OF TEMPORARY SEEDING AND MULCHING, EROSION CONTROL BLANKETS OR MATS, MID-SLOPE SEDIMENT FENCES OR WATTLES, OR OTHER APPROPRIATE MEASURES. SLOPES EXCEEDING 25% MAY REQUIRE ADDITIONAL EROSION CONTROL MEASURES.
7. AREAS SUBJECT TO WIND EROSION SHALL USE APPROPRIATE DUST CONTROL MEASURES INCLUDING THE APPLICATION OF A FINE SPRAY OF WATER, PLASTIC SHEETING, STRAW MULCHING, OR OTHER APPROVED MEASURES.
8. CONSTRUCTION ENTRANCES SHALL BE INSTALLED AT THE BEGINNING OF CONSTRUCTION AND MAINTAINED FOR THE DURATION OF THE PROJECT. ADDITIONAL MEASURES INCLUDING, BUT NOT LIMITED TO, TIRE WASHES, STREET SWEEPING, AND VACUUMING MAY BE BE REQUIRED TO INSURE THAT ALL PAVED AREAS ARE KEPT CLEAN FOR THE DURATION OF THE PROJECT.
9. ACTIVE INLETS TO STORM WATER SYSTEMS SHALL BE PROTECTED THROUGH THE USE OF APPROVED INLET PROTECTION MEASURES. ALL INLET PROTECTION MEASURES ARE TO BE REGULARLY INSPECTED AND MAINTAINED AS NEEDED.
10. SATURATED MATERIALS THAT ARE HAULED OFF-SITE MUST BE TRANSPORTED IN WATER-TIGHT TRUCKS TO ELIMINATE SPILLAGE OF SEDIMENT AND SEDIMENT-LADEN WATER.
11. AN AREA SHALL BE PROVIDED FOR THE WASHING OUT OF CONCRETE TRUCKS IN A LOCATION THAT DOES NOT PROVIDE RUN-OFF THAT CAN ENTER THE STORM WATER SYSTEM. IF THE CONCRETE WASH-OUT AREA CAN NOT BE CONSTRUCTED GREATER THAN 50' FROM ANY DISCHARGE POINT, SECONDARY MEASURES SUCH AS BERMS OR TEMPORARY SETTLING PITS MAY BE REQUIRED. THE WASH-OUT SHALL BE LOCATED WITHIN SIX FEET OF TRUCK ACCESS AND BE CLEANED WHEN IT REACHES 50% OF THE CAPACITY.
12. SWEEPINGS FROM EXPOSED AGGREGATE CONCRETE SHALL NOT BE TRANSFERRED TO THE STORM WATER SYSTEM. SWEEPINGS SHALL BE PICKED UP AND DISPOSED IN THE TRASH.
13. AVOID PAVING IN WET WEATHER WHEN PAVING CHEMICALS CAN RUN-OFF INTO THE STORM WATER SYSTEM.
14. USE BMPs SUCH AS CHECK-DAMS, BERMS, AND INLET PROTECTION TO PREVENT RUN-OFF FROM REACHING DISCHARGE POINTS.
15. COVER CATCH BASINS, MANHOLES, AND OTHER DISCHARGE POINTS WHEN APPLYING SEAL COAT, TACK COAT, ETC. TO PREVENT INTRODUCING THESE MATERIALS TO THE STORM WATER SYSTEM.

EROSION AND SEDIMENT CONTROL BMP IMPLEMENTATION:

1. ALL BASE ESC MEASURES (INLET PROTECTION, PERIMETER SEDIMENT CONTROL, GRAVEL CONSTRUCTION ENTRANCES, ETC.) MUST BE IN PLACE, FUNCTIONAL, AND APPROVED IN AN INITIAL INSPECTION, PRIOR TO COMMENCEMENT OF CONSTRUCTION ACTIVITIES.
2. ALL SEDIMENT BARRIERS SHALL BE INSTALLED IMMEDIATELY FOLLOWING ESTABLISHMENT OF FINISHED GRADE AS SHOWN ON THESE PLANS.
3. LONG TERM SLOPE STABILIZATION MEASURES INCLUDING MATTING SHALL BE IN PLACE OVER ALL EXPOSED SOILS BY OCTOBER 1.
4. INLET PROTECTION SHALL BE IN-PLACE IMMEDIATELY FOLLOWING PAVING ACTIVITIES.

LEGEND:

- PERIMETER CONSTRUCTION FENCING
- FLOW ARROW
- INLET PROTECTION
- XXX — PROPOSED CONTOUR
- SEDIMENT FENCE

CONSTRUCTION NOTES:

1. INSTALL SEDIMENT FENCE PER DETAIL 875 ON SHEET EC5.0.
2. INSTALL TEMPORARY CHAIN LINK CONSTRUCTION FENCING.
3. INSTALL INLET PROTECTION WITHIN R.O.W. PER DETAIL 920 ON SHEET EC5.0. INSTALL ALL OTHER CATCH BASIN INLET PROTECTION PER DETAIL 915 OR 920 ON SHEET EC5.0.
4. INSTALL JUTE NETTING ON SLOPE.

N

0 20 40 80

SCALE: 1" = 40'

BID/PERMIT SET

CONDITIONAL USE NUMBER: CU2018-0016
DESIGN REVIEW NUMBER: DR2018-0114
SITE DEVELOPMENT PERMIT NUMBER: TBD
BUILDING PERMIT NUMBER: TBD

REGISTERED PROFESSIONAL ENGINEER
59,971
OREGON
JUNE 11, 2005
JANELLE LYNN BRANNAN
EXPIRES: 12/31/2019

GRADING, STREET, AND UTILITY ESCP
ACMA
BEAVERTON SCHOOL DISTRICT

EC4.0
74-18109-00
03/14/19
REVISIONS

DLR Group
Architecture Planning Interiors

© 2018, DLR Group Architecture & Planning Inc., an Oregon corporation. ALL RIGHTS RESERVED

Harper Houf Peterson Righellis Inc.
ENGINEERS • PLANNERS
LANDSCAPE ARCHITECTS • SURVEYORS
205 SE Spokane Street, Suite 200, Portland, OR 97202
phone: 503.221.1131 www.hhpr.com fax: 503.221.1171

FOR FURTHER INFORMATION ON DESIGN CRITERIA SEE CHAPTER 4 OF CLEAN WATER SERVICES EROSION PREVENTION AND SEDIMENT CONTROL PLANNING AND DESIGN MANUAL.

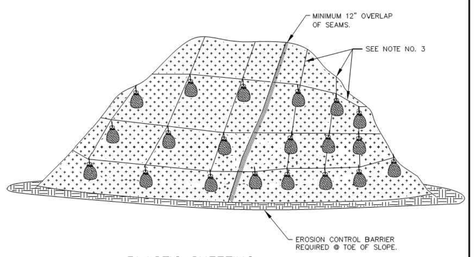

PLASTIC SHEETING

NOTES:

1. MINIMUM 12" OVERLAP OF ALL SEAMS REQUIRED.
2. BARRIER REQUIRED @ TOE OF 4 ROCK PILE.
3. COVERING MAINTAINED TIGHTLY IN PLACE BY USING SANDBAGS OR APPROVED EQUAL ON ROPES WITH A MAXIMUM 10' GRID SPACING IN ALL DIRECTIONS.
4. PLASTIC TO EXTEND MINIMUM 1' BEYOND TOE OF SLOPE

PLASTIC SHEETING
DRAWING NO. 810 REVISED 12-16
CleanWater Services

FOR FURTHER INFORMATION ON DESIGN CRITERIA SEE CHAPTER 4 OF CLEAN WATER SERVICES EROSION PREVENTION AND SEDIMENT CONTROL PLANNING AND DESIGN MANUAL.

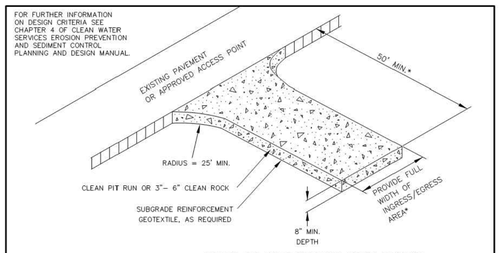

*20' MIN. FOR SINGLE FAMILY AND DUPLEX RESIDENTIAL

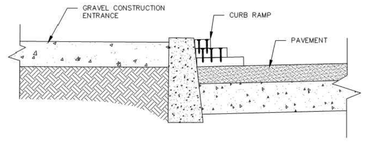

NOTES:

1. THE ENTRANCE SHALL BE MAINTAINED IN A CONDITION THAT WILL PREVENT TRACKING OR FLOWING OF SEDIMENT ONTO PUBLIC RIGHT-OF-WAYS. THIS MAY REQUIRE TOP DRESSING, REPAIR AND/OR CLEAN OUT OF ANY MEASURES USED TO TRAP SEDIMENT.
2. WHEN NECESSARY, WHEELS SHALL BE CLEANED PRIOR TO ENTRANCE ONTO PUBLIC RIGHT-OF- WAY.
3. WHEN WASHING IS REQUIRED, IT SHALL BE DONE ON AN AREA STABILIZED WITH CRUSHED STONE THAT DRAINS INTO AN APPROVED SEDIMENT TRAP OR SEDIMENT BASIN.
4. WHERE RUNOFF CONTAINING SEDIMENT LADEN WATER IS LEAVING THE SITE VIA THE CONSTRUCTION ENTRANCE, OTHER MEASURES SHALL BE IMPLEMENTED TO DIVERT RUNOFF THROUGH AN APPROVED FILTERING SYSTEM.
5. DIMENSIONS
   SINGLE FAMILY
   20' LONG BY 20' WIDE 8" DEEP OF ¾" MINUS CLEAN ROCK.
   COMMERCIAL
   50' LONG BY 20' WIDE 3-6" CLEAN ROCK, GOVERNING AUTHORITY MAY REQUIRE GEOTEXTILE FABRIC TO PREVENT SUB-SOIL PUMPING.

CONSTRUCTION ENTRANCE
DRAWING NO. 855 REVISED 12-16
CleanWater Services

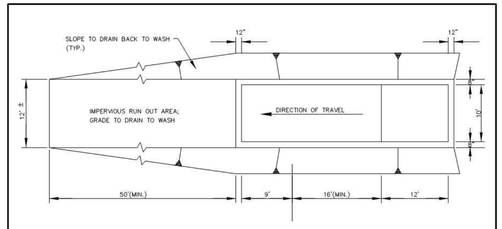

PLAN VIEW

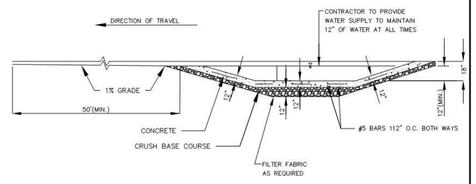

PROFILE

NOTES:

1. CONTRACTOR TO REMOVE ACCUMULATED SEDIMENT AS NEEDED TO PREVENT TRACKING FROM TIRE WASH; SEDIMENT LADEN WATER MAY BE PIPED TO AN APPROVED SEDIMENT TRAP.
2. USE GEOTEXTILE FABRIC WITH AGGREGATE FOR A TEMPORARY TIRE WASH.

FOR FURTHER INFORMATION ON DESIGN CRITERIA SEE CHAPTER 4 OF CLEAN WATER SERVICES EROSION PREVENTION AND SEDIMENT CONTROL PLANNING AND DESIGN MANUAL.

TIRE WASH-(DRIVE-THROUGH)
DRAWING NO. 870 REVISED 12-16
CleanWater Services

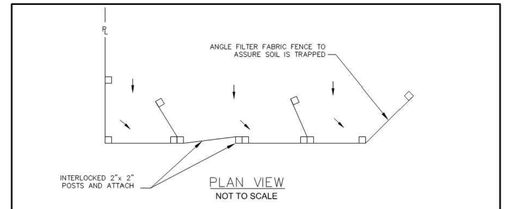

PLAN VIEW
NOT TO SCALE

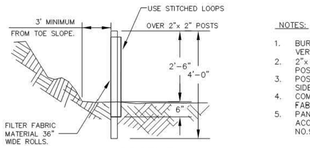

PROFILE
NOT TO SCALE

NOTES:

1. BURY BOTTOM OF FILTER FABRIC 6" VERTICALLY BELOW FINISHED GRADE.
2. 2"x 2" FIR, PINE OR STEEL FENCE POSTS.
3. POSTS TO BE INSTALLED ON UPHILL SIDE OF SLOPE.
4. COMPACT BOTH SIDES OF FILTER FABRIC TRENCH.
5. PANELS MUST BE PLACED ACCORDING TO SPACING ON DETAIL NO.940

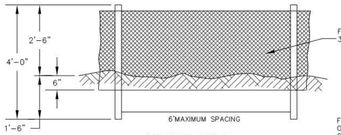

FRONT VIEW
NOT TO SCALE

FOR FURTHER INFORMATION ON DESIGN CRITERIA SEE CHAPTER 4 OF CLEAN WATER SERVICES EROSION PREVENTION AND SEDIMENT CONTROL PLANNING AND DESIGN MANUAL.

SEDIMENT FENCE
DRAWING NO. 875 REVISED 12-16
CleanWater Services

NOTES:

1. WASHOUT FACILITIES SHALL BE MAINTAINED TO PROVIDE ADEQUATE HOLDING CAPACITY WITH A MINIMUM FREEBOARD OF 12 INCHES.
2. WASHOUT FACILITIES MUST BE CLEANED, OR NEW FACILITIES MUST BE CONSTRUCTED AND READY FOR USE ONCE THE WASHOUT IS 75% FULL.
3. IF THE WASHOUT IS NEARING CAPACITY, VACUUM AND DISPOSE OF THE WASTE MATERIAL IN AN APPROVED MANNER.
4. TEMPORARY CONCRETE WASHOUT FACILITIES SHALL BE LOCATED A MINIMUM OF 50 FT FROM SENSITIVE AREAS INCLUDING OPEN DRAINAGE FACILITIES AND WATERSOURSES.
5. CONCRETE WASHOUT FACILITIES SHALL BE CONSTRUCTED AND MAINTAINED IN SUFFICIENT QUANTITY AND SIZE TO CONTAIN ALL LIQUID AND CONCRETE WASTE GENERATED BY WASHOUT OPERATIONS.
6. INSTALL CONCRETE WASHOUT SIGN WITHIN 30 FEET OF TEMPORARY CONCRETE WASHOUT FACILITY.
7. TEMPORARY CONCRETE WASHOUTS MAY BE A PREFABRICATED CONTAINER THAT IS PORTABLE AND REUSABLE.

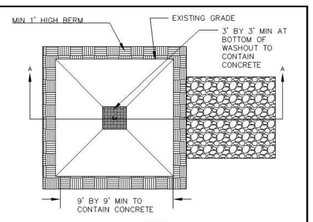

PLAN
NOT TO SCALE

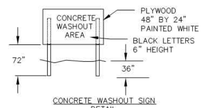

CONCRETE WASHOUT SIGN DETAIL
(OR EQUIVALENT)
NOT TO SCALE

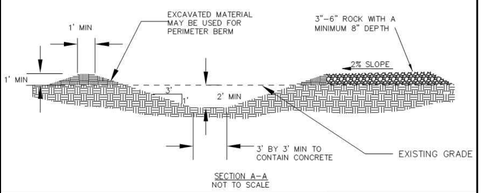

SECTION A-A
NOT TO SCALE

CONCRETE WASHOUT
DRAWING NO. 900 REVISED 12-16
CleanWater Services

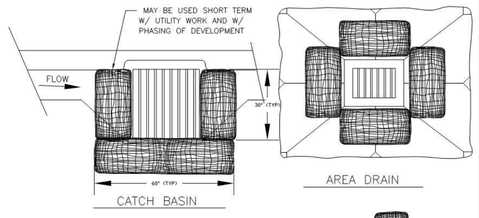

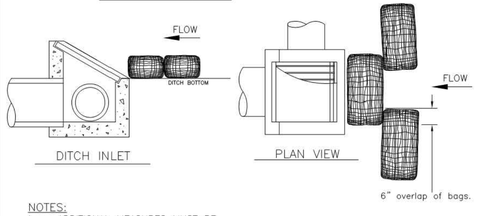

NOTES:

1. ADDITIONAL MEASURES MUST BE CONSIDERED DEPENDING ON SOIL TYPES.
2. BIO-FILTER BAGS SHOULD BE STAKED WHERE APPLICABLE USING (2) 1"x2" WOODEN STAKES OR APPROVED EQUAL PER BAG.
3. WHEN USING 30" BIO-BAGS TO PROTECT A CATCH BASIN YOU MUST HAVE 4 BAGS AND THEY SHALL BE OVERLAPPED BY 6".

FOR FURTHER INFORMATION ON DESIGN CRITERIA SEE CHAPTER 4 OF CLEAN WATER SERVICES EROSION PREVENTION AND SEDIMENT CONTROL PLANNING AND DESIGN MANUAL.

INLET PROTECTION TYPE 4
DRAWING NO. 915 REVISED 12-16
CleanWater Services

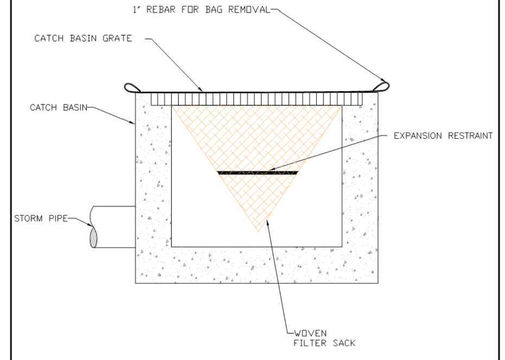

CATCH BASIN INSERT

NOTE:

1. RECESSED CURB INLET CATCH BASINS MUST BE BLOCKED WHEN USING FILTER FABRIC INLET SACKS. SIZE OF FILTER FABRIC INLET SACKS TO BE DETERMINED BY MANUFACTURER.

FOR FURTHER INFORMATION ON DESIGN CRITERIA SEE CHAPTER 4 OF CLEAN WATER SERVICES EROSION PREVENTION AND SEDIMENT CONTROL PLANNING AND DESIGN MANUAL.

INLET PROTECTION TYPE 5
DRAWING NO. 920 REVISED 12-16
CleanWater Services

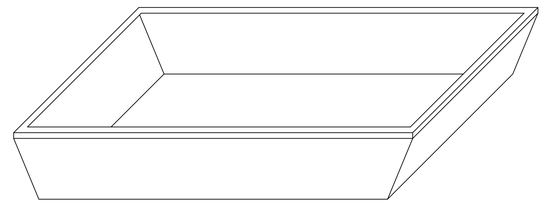

NOTES:
1. COLLECT AND RETAIN ALL THE CONCRETE WASHOUT WATER AND SOLIDS IN A LEAK PROOF BASIN.
2. INSPECT FREQUENTLY. DO NOT OVERFILL BASIN. CLEAN OUT ONCE BASIN IS APPROX. HALF FULL.
3. RECYCLE MATERIALS.
   A. WASHWATER RECYCLING: WASHWATER SHOULD BE PASSED THROUGH A FILTER AND TREATMENT SYSTEM TO REMOVE SOLIDS REDUCE PH. WASHWATER MAY BE REUSED FOR CONCRETE WASHOUT WATER. DISPOSAL OF WASHWATER SHALL BE AT AN APPROVED DISPOSAL FACILITY. DO NOT DRAIN TO STORM OR SANITARY SYSTEM.
   B. SOLIDS RECYCLING: COURSE AGGREGATE MATERIALS THAT ARE SEPARATED FROM WASHWATER MAY BE RETURN TO READY MIX PLANT. COORDINATE WITH READY MIX PLANT PRIOR TO CONSTRUCTION.
   C. HARDENED CONCRETE RECYCLING: ALLOW CONCRETE WASHOUT TO HARDEN IN BASIN. THE HARDEN CONCRETE MAY BE DELIVERED TO RECYCLING PLANTS.

CONCRETE TRUCK WASHOUT BASIN
N.T.S.

BID/PERMIT SET

CONDITIONAL USE NUMBER: CU2018-0016
DESIGN REVIEW NUMBER: DR2018-0114
SITE DEVELOPMENT PERMIT NUMBER: TBD
BUILDING PERMIT NUMBER: TBD

REGISTERED PROFESSIONAL ENGINEER 59,971 OREGON JANUARY 11, 2005 JANELLE LYNN BRANNAN

EXPIRES: 12/31/2019

BEAVERTON SCHOOL DISTRICT

ESC DETAILS
ACMA

EC5.0
74-18109-00
0314419
REVISIONS

DLR Group
Architecture Planning Interiors

© 2018, DLR Group Architecture & Planning Inc., an Oregon corporation. ALL RIGHTS RESERVED

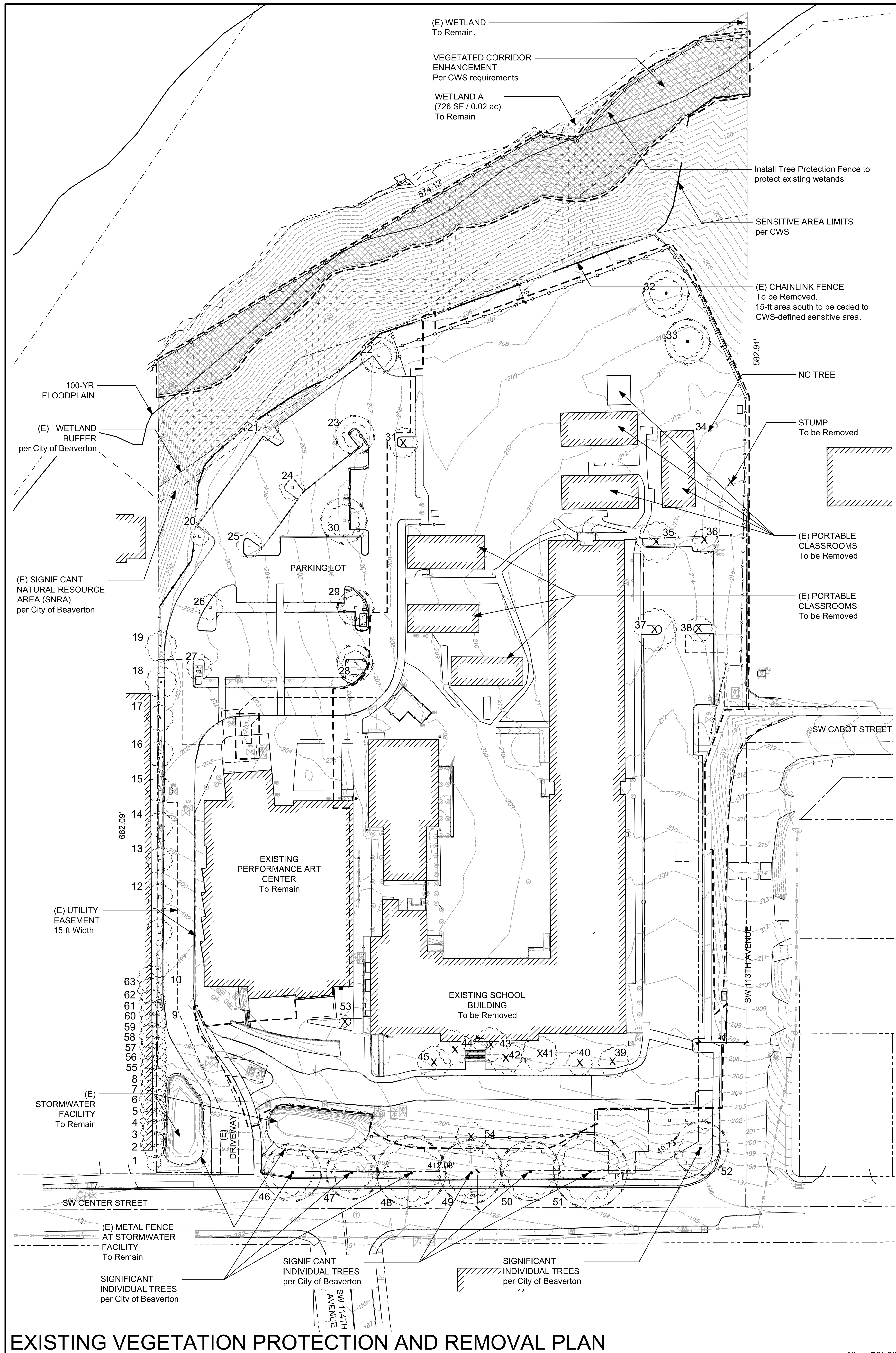

EXISTING VEGETATION PROTECTION AND REMOVAL PLAN

0' 25' 50' 100'
1" = 50'-0"
NORTH

TREE INVENTORY/ANALYSIS

Plan ID	Genus & Species	Common Name	DBH	Canopy (Dia.)	Health/ Condition *	Arborist Notes	within 10' of Structure	Co-dominant Leader	Surface Roots	% Deadwood	History of Being Topped	Suckers	Protect/Remove
1	Picea	Spruce	6"	13-ft	3	canopy is crowded by neighboring tree							Protect
2	Thuja occidentalis	Western Red Cedar	20"	22-ft	3		X			10%			Protect
3	Thuja occidentalis	Western Red Cedar	20"	22-ft	3		X			10%			Protect
4	Thuja occidentalis	Western Red Cedar	16"	22-ft	3		X			10%			Protect
5	Thuja occidentalis	Western Red Cedar	16"	22-ft	3		X	X		10%			Protect
6	Thuja occidentalis	Western Red Cedar	16"	22-ft	3		X	X		10%			Protect
7	Thuja occidentalis	Western Red Cedar	16"	22-ft	3		X			10%			Protect
8	Thuja occidentalis	Western Red Cedar	(2) 12"	22-ft	3		X	X		10%			Protect
9	Acer platanoides	Norway Maple	3"	7-ft	3		X						Protect
10	Acer platanoides	Norway Maple	3"	16-ft	4		X						Protect
11	Acer platanoides	Norway Maple	4"	22-ft	4		X		X				Protect
12	Acer platanoides	Norway Maple	4"	22-ft	4		X		X			X	Protect
13	Acer platanoides	Norway Maple	4"	22-ft	4		X		X				Protect
14	Acer platanoides	Norway Maple	4"	22-ft	3		X		X			X	Protect
15	Acer platanoides	Norway Maple	4"	22-ft	4		X		X				Protect
16	Acer platanoides	Norway Maple	4"	22-ft	4		X		X				Protect
17	Acer platanoides	Norway Maple	6"	22-ft	3		X		X			X	Protect
18	Acer platanoides	Norway Maple	6"	25-ft	4				X				Protect
19	Acer platanoides	Norway Maple	6"	25-ft	3				X			X	Protect
20	Nyssa sylvatica	Black Tupelo	4"	16-ft	3	string damage on base of trunk						X	Protect
21	Nyssa sylvatica	Black Tupelo	6"	20-ft	4	string damage on base of trunk							Protect
22	Nyssa sylvatica	Black Tupelo	4"	20-ft	3	exposed wood at base of trunk				5%			Protect
23	Nyssa sylvatica	Black Tupelo	4"	20-ft	4	ivy @ base							Protect
24	Nyssa sylvatica	Black Tupelo	4"	20-ft	4								Protect
25	Nyssa sylvatica	Black Tupelo	4"	20-ft	4	ivy @ base							Protect
26	Nyssa sylvatica	Black Tupelo	4"	20-ft	4								Protect
27	Nyssa sylvatica	Black Tupelo	4"	20-ft	4								Protect
28	Nyssa sylvatica	Black Tupelo	4"	20-ft	4	ivy @ base							Protect
29	Nyssa sylvatica	Black Tupelo	4"	20-ft	4	ivy @ base							Protect
30	Nyssa sylvatica	Black Tupelo	4"	26-ft	3	ivy @ base							Protect
31	Nyssa sylvatica	Black Tupelo	4"	20-ft	4								Remove
32	Acer rubrum	Red Maple	8"	28-ft	4	exposed dead wood							Protect
33	Acer rubrum	Red Maple	8"	28-ft	4	extruded bark, exposed dead wood							Protect
34	TREE REMOVED												
35	Betula pendula 'Laciniata'	Cutleaf European White Birch	8"	35-ft	3								Remove
36	Betula pendula 'Laciniata'	Cutleaf European White Birch	26"	20-ft	3	woodpecker / birch borer damage on trunk			X				Remove
37	Gleditsia triacanthos	Honeylocust	10"	36-ft	3			X		10%		X	Remove
38	Gleditsia triacanthos	Honeylocust	(4) 6"	21-ft	2	Inosculation; poor form				10%			Remove
39	Acer platanoides	Norway Maple	10"	26-ft	2	exposed dead wood, woodpecker damage, sunscalding on trunk, uneven canopy			X	10%			Remove
40	Acer platanoides 'Deborah'	Norway Maple	8"	20-ft	3				X	5%			Remove
41	Acer platanoides	Norway Maple	8"	30-ft	2	exposed wood			X				Remove
42	Acer platanoides 'Deborah'	Norway Maple	8"	28-ft	3	exposed wood, uneven canopy		X	X				Remove
43	Acer palmatum	Japanese Maple	12"	30-ft	3	exposed wood	X		X				Remove
44	Acer palmatum	Japanese Maple	10"	30-ft	3	exposed wood	X		X				Remove
45	Acer platanoides 'Deborah'	Norway Maple	10"	28-ft	3			X	X				Remove
53	Styrax japonicus	Japanese Snowbell	5"	10-ft	4							X	Remove
54	Prunus sp.	Cherry	8"	24-ft	3	uneven canopy		X		5%		X	Remove
55	Thuja occidentalis	Western Red Cedar	20"	22-ft	3		X			10%			Protect
56	Thuja occidentalis	Western Red Cedar	20"	22-ft	3		X			10%			Protect
57	Thuja occidentalis	Western Red Cedar	20"	22-ft	3		X			10%			Protect
58	Thuja occidentalis	Western Red Cedar	20"	22-ft	3		X	X		10%			Protect
59	Thuja occidentalis	Western Red Cedar	20"	22-ft	3		X			10%			Protect
60	Thuja occidentalis	Western Red Cedar	20"	22-ft	3		X	X		10%			Protect
61	Thuja occidentalis	Western Red Cedar	20"	22-ft	3		X	X		10%			Protect
62	Thuja occidentalis	Western Red Cedar	20"	22-ft	3		X			10%			Protect
63	Thuja occidentalis	Western Red Cedar	20"	22-ft	3		X			10%			Protect
Trees within R.O.W.													
46	Betula pendula 'Laciniata'	Cutleaf European White Birch	(2) 16"	38-ft	3			X		5%			Protect
47	Betula pendula 'Laciniata'	Cutleaf European White Birch	22"	34-ft	3				X	5%			Protect
48	Betula pendula 'Laciniata'	Cutleaf European White Birch	22"	48-ft	3				X	5%			Protect
49	Betula pendula 'Laciniata'	Cutleaf European White Birch	24"	43-ft	3				X				Protect
50	Betula pendula 'Laciniata'	Cutleaf European White Birch	24"	40-ft	3				X	5%			Protect
51	Betula pendula 'Laciniata'	Cutleaf European White Birch	24"	52-ft	3				X	5%			Protect
52	Betula pendula 'Laciniata'	Cutleaf European White Birch	20"	35-ft	3			X		10%			Protect

*Condition		
5 =	excellent	perfect form, little to no deadwood, all limbs have good attachments, no sign of decay
4 =	very good	good form, multi-leader, but with good attachment, 10% or less large deadwood
3 =	good	unbalanced or incomplete crown, tight limb angles, 15-20% larger deadwood
2 =	poor	Evidence of some decay, 20-30% larger deadwood, history of being topped.
1 =	very poor	Structurally unsound, extensive decay, dieback, poor form, unbalanced or greatly reduced crown.

LEGEND

- 582.91' — PROPERTY LINE, Dimensions shown
- CENTERLINE OF STREET per Survey
- LIMIT OF WORK
- 35 — EXISTING TREES (6" DBH or greater) To Remain. Refer to Tree Inventory/Analysis table
- 34 X — EXISTING TREES (6" DBH or greater) To be Removed. Refer to Tree Inventory/Analysis table
- CRZ — EXISTING TREE PROTECTION ZONE, 5-ft offset from tree canopy edge
- VEGETATION PROTECTION FENCE, See Note 2
- EXISTING LAWN/LANDSCAPE To be Removed. Grub out and remove stumps. See Civil, Electrical, and Architectural for additional work.
- SENSITIVE AREA per CWS To Remain
- VEGETATED CORRIDOR ENHANCEMENT To be Remain. See Note 6
- (E) — DENOTES EXISTING ELEMENT

NOTES

1. All survey information provided by:
   Emerio Design
   8285 SW Nimbus Ave, Suite 180
   Beaverton, OR 97008
   Phone: 503-746-8812

2. Tree Protection Fence - Install fence during initial mobilization at the site and maintain until substantial completion. Fence shall be a four foot (4') tall orange plastic fence, secured to six foot (6') tall metal posts, driven two feet (2') into ground. Heavy 12-gauge wire shall be strung between each post and attached to top and mid-point of each post. Colored tree flagging indicating that this area is a tree protection zone is to be placed every five linear feet (5 LF) on the fence to alert Contractor to the protection zone.

3. Zone of Protection - Boundaries as indicated on plan and as directed by Owner's Representative. Enclose areas with Tree Protection Fencing. Obtain advance written authorization from the Owner's Representative for removal or modification of fencing. There shall be no work conducted in the enclosed area, no storage, no traffic nor other activity not previously approved.

4. Work allowed within Zone of Protection - Where indicated on plans only trench-less boring at pre-authorized depths, "air spade" or hand digging. Fill placement allowed at specific locations shown on plan, as allowed by Project Arborist. Do not cut roots larger than 1.5 inches diameter without approval. Cut roots and protect exposed roots as required.

5. Barricade and protect trunks, limbs, roots and root zones beyond dripline of existing trees and plant materials to remain as directed by Owner's Representative. Cut no limbs or roots larger than 2" in diameter without approval of Owner's Representative. Notify Owner's Representative prior to performing any excavation within protection areas.

6. At Vegetated Corridor Enhancement area, invasive, non-native understory vegetation to be removed. Work to be performed by hand and as per Clean Water Services (CWS) requirements. No trees to be removed, except where determined to be hazardous to invasive understory removal and installation of native vegetation enhancement.

7. Refer to Arborist Report for additional tree inventory information.

BID/PERMIT SET

CONDITIONAL USE NUMBER: CU2018-0016
DESIGN REVIEW NUMBER: DR2018-0114
SITE DEVELOPMENT PERMIT NUMBER: TBD
BUILDING PERMIT NUMBER: TBD

CAMERON McCARTHY
LANDSCAPE ARCHITECTURE & PLANNING
160 East Broadway • Eugene Oregon 97401 • v 541.485.7385
www.cameronmccarthy.com • f 541.485.7389

REGISTERED LANDSCAPE ARCHITECT
538
MATTHEW S. KOEHLER
OREGON
11/21/03

EXISTING VEGETATION PROTECTION AND REMOVAL PLAN
ACMA BEAVERTON SCHOOL DISTRICT

L0.0
74-18109-00
1/31/2019
REVISIONS

DLR Group
Architecture Engineering Planning Interiors

© 2018, DLR Group Architecture & Engineering inc., an Oregon corporation, ALL RIGHTS RESERVED

C:\Revit\74-18109-00_ACMA_AR_2018_Central_jgooding@dlrgroup.com.rvt
2/23/2018 12:12:44 PM

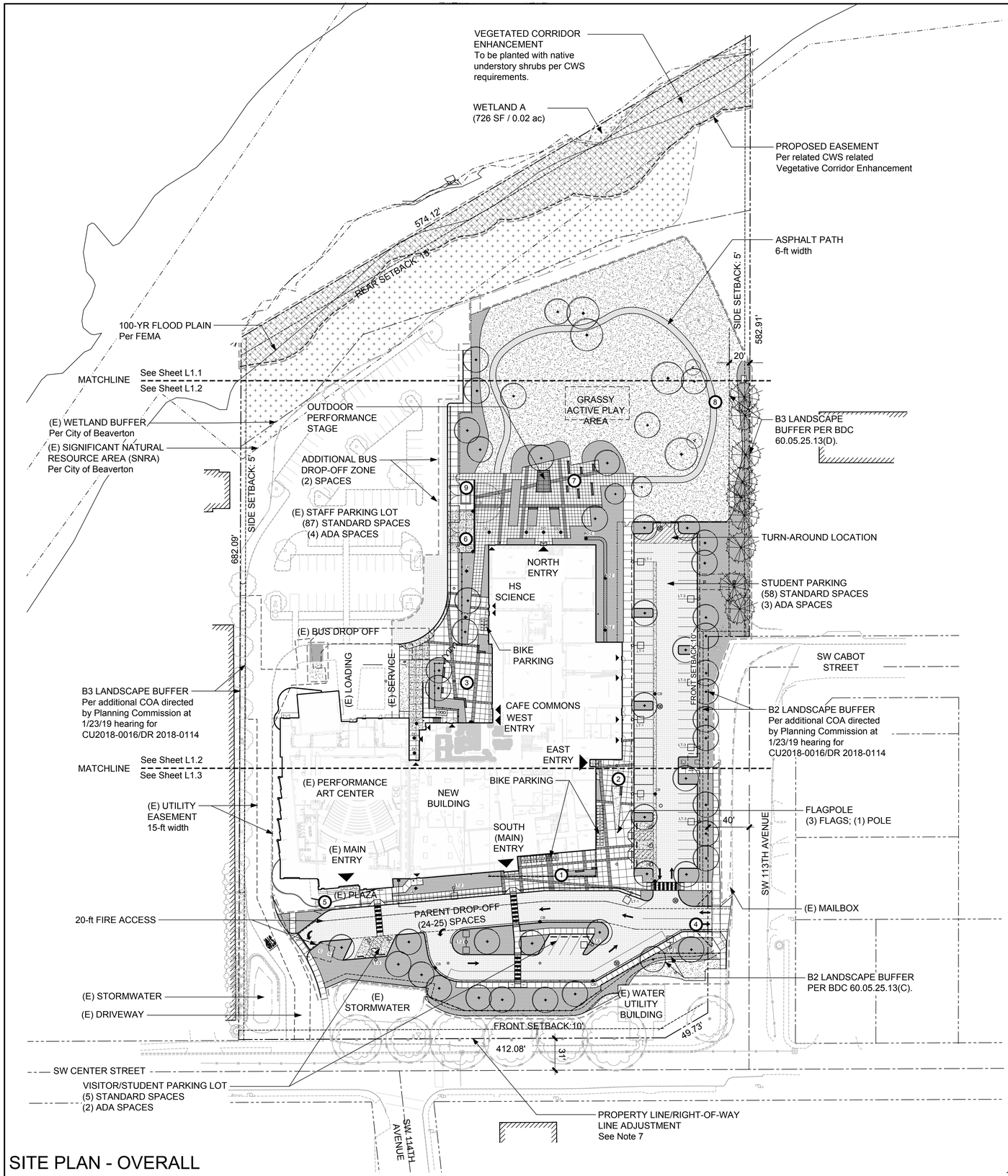

SITE PLAN - OVERALL

1" = 50'-0"

0' 25' 50' 100'

NORTH

NOTES

1. All survey information provided by:
   Emerio Design
   8285 SW Nimbus Ave, Suite 180
   Beaverton, OR 97008
   Phone: 503-746-8812
2. Verify exact locations and routing of existing underground utilities prior to starting excavation. Repair any damage to existing pipes, utilities or related facilities at Contractor's expense in a manner approved by Owner's Representative.
3. Barricade and protect trunks, limbs, roots and root zones beyond dripline of existing trees and plant materials to remain as directed by Owner's Representative. Cut no limbs or roots larger than 2" in diameter without approval of Owner's Representative. Notify Owner's Representative prior to performing any excavation within protection areas.
4. Install new utilities so that rim elevations are flush with finish grades at pavement, lawn and plant beds. Adjust rim elevations of existing utilities accordingly.
5. All accessible components including, but not limited to signs, ramps, tactile warning, markings, etc. shall conform to all Oregon State Standards for parking and access for the disabled. Obtain Owner's Representative approval prior to installing any related work.
6. Verify existing elevations where new work abuts existing to remain. Notify Owner's Representative of any discrepancies.
7. Per Condition of Approval #20 of the ACMA High School Rebuild - Facilities Review report CU2018-0016/DR2018-0014/SDM2018-0012 an additional one (1) foot of right-of-way along SW Center Street is dedicated to provide a minimum of 31 feet from centerline to meet the City's two lane collector street standard.

KEY NOTES

1. SOUTH (MAIN) ENTRY PLAZA: STANDARD CONCRETE PAVING WITH DECORATIVE CONCRETE PAVING BANDS, CONCRETE SEAT WALLS, BIKE PARKING, LAWN AND LANDSCAPE.
2. EAST ENTRY PLAZA: STANDARD CONCRETE PAVING WITH DECORATIVE CONCRETE PAVING BANDS, CONCRETE SEAT WALLS, BENCHES AND LANDSCAPE, AND FLAGPOLE.
3. WEST ENTRY PLAZA/OUTDOOR DINING: STANDARD CONCRETE PAVING WITH COLORED CONCRETE PAVING BANDS, CONCRETE SEAT WALLS, BIKE PARKING, DECORATIVE METAL FENCING, LAWN AND LANDSCAPE.
4. PARENT AND VISITOR ENTRY DRIVE: EXPANDED EXISTING DRIVEWAY. LOCATION SHIFTED NORTH.
5. PERFORMANCE ART CENTER PLAZA: ASPHALT FIRE TRUCK ACCESS AND PARENT DROP OFF, STANDARD CONCRETE PAVING, CONCRETE DRIVE APRON, RAISED LANDSCAPE PLANTER, LANDSCAPE.
6. TRASH/RECYCLING/DISPOSAL AREA: ENCLOSED BY CHAIN LINK VINYL-COATED FENCE, GATES, AND WALL.
7. OUTDOOR PERFORMANCE AREA: CONCRETE STAGE, CONCRETE PAVING, CONCRETE SEAT WALLS AND LANDSCAPE.
8. COMPACTED GRAVEL PATH: 6-FT WIDE PATH ON AGGREGATE BASE.
9. GENERATOR: ENCLOSED BY CHAIN LINK VINYL-COATED FENCE AND WALL.

PARKING COUNTS

EXISTING VEHICLE PARKING SPACES	160 TOTAL (7 ADA)*
PROPOSED VEHICLE PARKING SPACES	160 TOTAL (9 ADA)*
PROPOSED NEW BIKE PARKING SPACES	58 TOTAL (29 racks)

*ADA PARKING QUANTITIES INCLUDED IN TOTAL.

LEGEND

- 582.91' — PROPERTY LINE, Dimension Shown
- EASEMENT LINE
- LIMIT OF WORK
- (E) TREE (6" DBH or greater) To Remain
- (E) TREE PROTECTION
- PROPOSED TREE
- (E) EXISTING ELEMENT
- CWS CLEAN WATER SERVICES
- CONCRETE - VEHICLE-RATED See Civil for profile
- DECORATIVE PAVING BANDS See Civil for profile
- ASPHALT PAVING
- DETECTABLE PAVING ADA diamond score pattern; colored concrete
- PLANT BED With bark mulch
- LAWN
- SENSITIVE AREA As defined by CWS Beyond Limits of Work
- ASPHALT PATH
- RIVER ROCK TRENCH
- VEGETATED CORRIDOR ENHANCEMENT Per CWS
- BUILDING DOORS
- NEW BIKE RACKS (29) racks; (58) spaces

BID/PERMIT SET

CONDITIONAL USE NUMBER: CU2018-0016
DESIGN REVIEW NUMBER: DR2018-0114
SITE DEVELOPMENT PERMIT NUMBER: TBD
BUILDING PERMIT NUMBER: TBD

CAMERON McCARTHY
LANDSCAPE ARCHITECTURE & PLANNING
www.cameronmccarthy.com

REGISTERED LANDSCAPE ARCHITECT
538
MATTHEW S. KOEHLER
OREGON
11/21/03

SITE PLAN - OVERALL
ACMA
BEAVERTON SCHOOL DISTRICT

L1.0
74-18109-00
1/31/2019
REVISIONS

DLR Group
Architecture Engineering Planning Interiors

© 2018, DLR Group Architecture & Engineering Inc., an Oregon corporation. ALL RIGHTS RESERVED

C:\Revit\74-18109-00_ACMA_AR_2018_Central_jgooding@dlrgroup.com.rvt
2/23/2018 12:12:44 PM

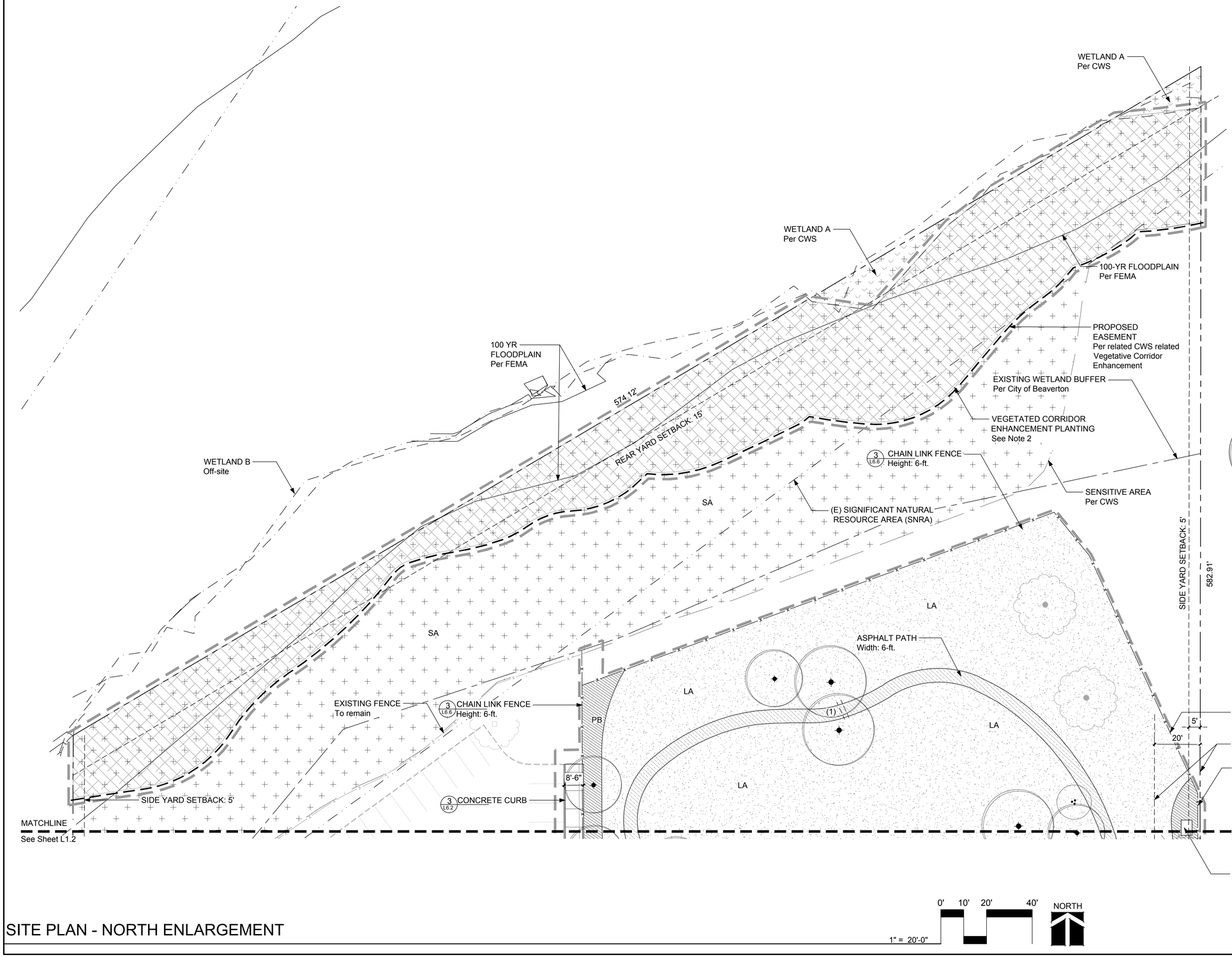

NOTES

1. See Sheet L1.0 for Site Plan notes.
2. At Vegetated Corridor Enhancement, area to be cleared of invasive, non-native understory vegetation. Native understory planting to be provided after clearing using CWS-approved plants and planting densities. Access provided by church property east of school property.
3. Chainlink fence to include slats once fence begins to run along property line.

LEGEND

- 582.91' — PROPERTY LINE
- LIMIT OF WORK
- (E) FENCE — To remain
- PROPOSED VINYL CLAD CHAINLINK FENCE (6-ft height)
- EASEMENT LINE
- PB — PLANT BED — With bark mulch (1 L6.1) (2 L6.1)
- LA — LAWN
- SA — SENSITIVE AREA — As defined by CWS
- ASPHALT PATH — 6-ft width — 3" asphalt over 8" aggregate, over geotextile fabric. See Civil.
- RIVER ROCK TRENCH (5 L6.4)
- WETLAND — Per CWS
- VEGETATED CORRIDOR ENHANCEMENT — Per CWS — See Note 2.
- PROPOSED TREE (5 L6.1) (6 L6.1) (7 L6.1)
- EXISTING TREE — (6" DBH or greater) — To Remain
- EXISTING TREE — (less than 6" DBH) — To Remain

SITE PLAN - NORTH ENLARGEMENT

BID/PERMIT SET

CONDITIONAL USE NUMBER: CU2018-0016
DESIGN REVIEW NUMBER: DR2018-0114
SITE DEVELOPMENT PERMIT NUMBER: TBD
BUILDING PERMIT NUMBER: TBD

CAMERON McCARTHY
LANDSCAPE ARCHITECTURE & PLANNING
920 SW Broadway • Suite Oregon 97205 • t 541.485.7555
www.cameronmccarthy.com • f 541.485.7555

REGISTERED 538 MATTHEW S. KOEHLER OREGON 11/21/03 LANDSCAPE ARCHITECT

ACMA
BEAVERTON SCHOOL DISTRICT

L1.1
74-18109-00
1/31/2019
REVISIONS

DLR Group
Architecture Engineering Planning Interiors

© 2018, DLR Group Architecture & Engineering Inc., an Oregon corporation. ALL RIGHTS RESERVED

C:\Revit\74-18109-00_ACMA_AR_2018_Central_jgooding@dlrgroup.com.rvt
2/23/2018 12:12:44 PM

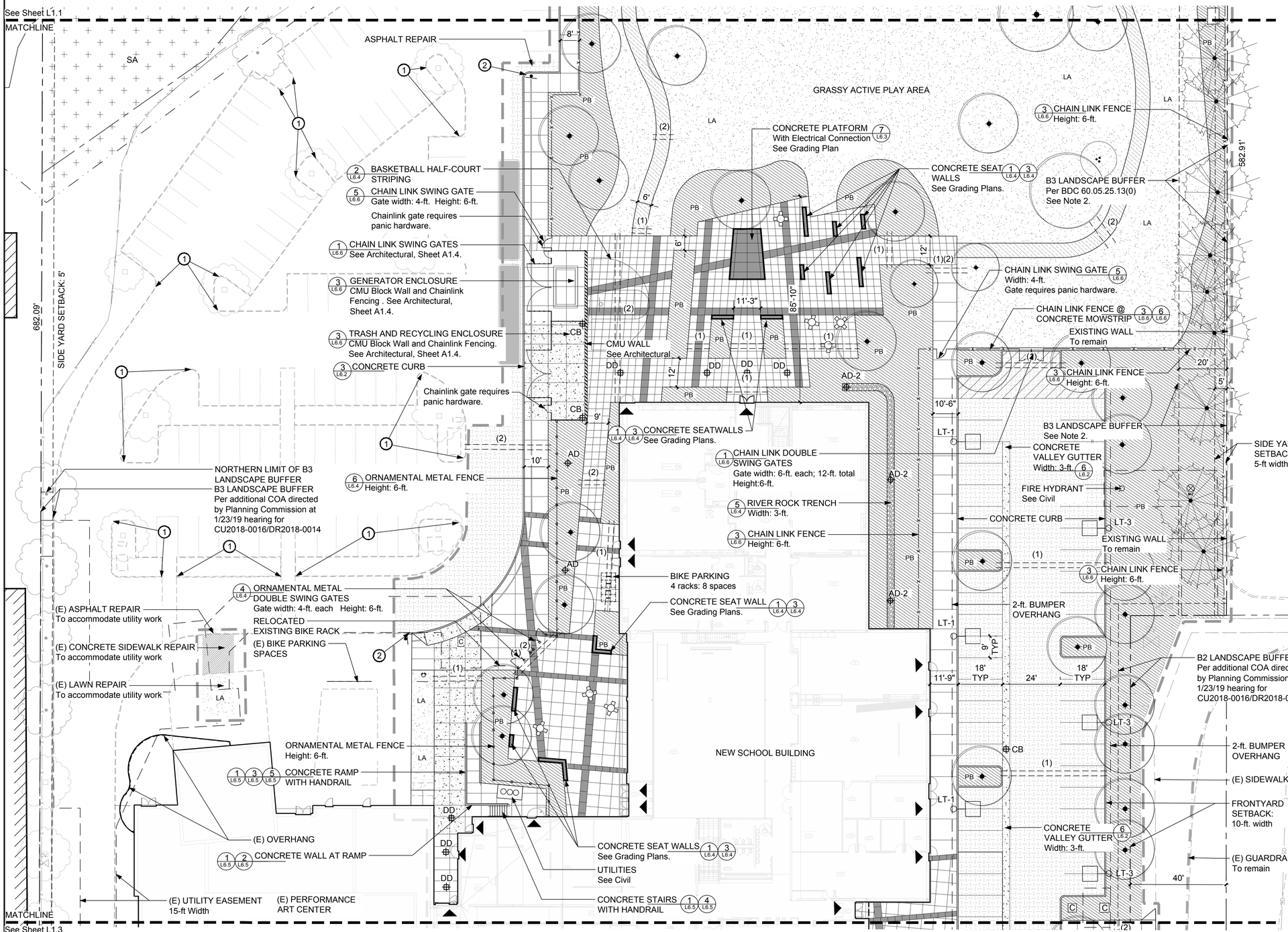

NOTES

1. See Sheet L1.0 for Site Plan notes.
2. B3 landscape buffer to include fully site-obscuring fence, 1 tree/30 feet, evergreen shrubs, and ground cover. Per BDC 60.05.25.13(D).

LEGEND

- 582.91' — PROPERTY LINE
- CENTERLINE OF STREET Per Survey
- LIMIT OF WORK
- (E) FENCE To remain
- PROPOSED VINYL CLAD CHAINLINK FENCE (6-ft height)
- PROPOSED ORNAMENTAL METAL FENCE (6-ft height)
- EASEMENT LINE
- (E) TREE (6" DBH or greater) To remain
- PROPOSED TREE See Tree Plan 5 L6.1 6 L6.1 7 L6.1
- CONCRETE PAVING 1 L6.2
- CONCRETE - VEHICLE-RATED 2 L6.2 See Civil for profile
- CONCRETE PAVING BANDS Finish: acid wash w/ black sand; Color: Davis Dark Gray 1 L6.2 2 L6.2
- ASPHALT PAVING See Civil for profile and paving plan
- DETECTABLE PAVING 5 L6.3 ADA diamond score pattern; colored concrete (Davis dark gray)
- PB — PLANT BED With bark mulch 1 L6.1 2 L6.1
- LA — LAWN
- ASPHALT PATH 6-ft width 3" asphalt over 8" aggregate, over geotextile fabric. See Civil.
- RIVER ROCK TRENCH 5 L6.4
- CONCRETE SEATWALL Finish: Acid wash w/ black sand; 1 L6.4 Color: Davis Dark Gray
- NEW BIKE RACKS (29) racks; (58) spaces 3 L6.3
- SEATING ELEMENTS Owner-furnished
- (E) EXISTING ELEMENT
- CB AD DD — CATCH BASIN, AREA DRAIN, DECK DRAIN DD cover: 12" sq. Vertigo by Ironsmith
- SIGN See Sheet L7.0 for Signage Diagram 4 L6.7 1 L6.8 2 L6.8 3 L6.8
- 15' / 15' — VISION CLEARANCE ZONE Per City of Beaverton standard
- C SD — UTILITIES See Civil or Electrical
- LT-1 LT-2 LT-3 — SITE LIGHTING 1 L6.3 2 L6.3 See Electrical
  - LT-1: FOOTING TYPE 1
  - LT-2: FOOTING TYPE 2
  - LT-3: FOOTING TYPE 3
- (#) — IRRIGATION SLEEVE 1 L6.0 6" Sleeve at quantity shown in (#)

KEY NOTES

1. CONCRETE CURB PAINTED RED WITH "NO PARKING FIRE LANE" TEXT.
2. CONCRETE CURB PAINTED YELLOW.

0' 10' 20' 40' NORTH

1" = 20'-0"

SITE PLAN - CENTRAL ENLARGEMENT

BID/PERMIT SET

CONDITIONAL USE NUMBER: CU2018-0016
DESIGN REVIEW NUMBER: DR2018-0014
SITE DEVELOPMENT PERMIT NUMBER: TBD
BUILDING PERMIT NUMBER: TBD

CAMERON McCARTHY
LANDSCAPE ARCHITECTURE & PLANNING

185 East Broadway • Eugene, Oregon 97401 • t 541.485.7500
www.cameronmccarthy.com • f 541.485.7505

REGISTERED 538 MATTHEW S. KOEHLER OREGON 11/21/03 LANDSCAPE ARCHITECT

SCHOOL DISTRICT
CENTRAL ENLARGEMENT
ACMA
BEAVERTON SCHOOL DISTRICT

L1.2
74-18109-00
1/31/2019
REVISIONS

DLR Group
Architecture Engineering Planning Interiors

© 2018, DLR Group Architecture & Engineering Inc., an Oregon corporation. ALL RIGHTS RESERVED

C:\Revit\74-18109-00_ACMA_AR_2018_Central_jgooding@dlrgroup.com.rvt
2/23/2018 12:12:44 PM

See Sheet L1.2
MATCHLINE

682.09'

(E) PERFORMANCE ART CENTER

NEW SCHOOL BUILDING

B3 LANDSCAPE BUFFER
Per additional COA directed by Planning Commission at 1/23/19 hearing for CU2018-0016/DR2018-0014

EXISTING OVERHANG

CONCRETE CHEEK WALL WITH HANDRAIL @ EXISTING STAIRS

END OF LOADING ZONE SIGN

RELOCATED EXISTING BIKE RACKS

2 FT BUMPER OVERHANG

37'-2"

9' TYP

CB

LT-1

18' TYP

24'

18' TYP

(E) GUARDRIAL To Remain

2 FT BUMPER OVERHANG

40'

1 L6.4 3 L6.4 CONCRETE SEAT WALL See Grading Plans.

4 L6.3 FLAGPOLE (3) flags on (1) pole

3 L6.3 BIKE PARKING 13 racks: 26 spaces

BUILDING OVERHANG

1 L6.4 3 L6.4 CONCRETE SEAT WALL See Grading Plans.

3 L6.3 BIKE PARKING 12 racks: 24 spaces

40'-6"

6'

ADA PARKING AND SIGNAGE

CONCRETE CURB

CARPOOL PARKING SIGNS (5) spaces

AT-GRADE CROSSING WITH PAVEMENT MARKINGS

B3 LANDSCAPE BUFFER
Per additional COA directed by Planning Commission at 1/23/19 hearing for CU2018-0016/DR2018-0014

LT-2

LT-3

AD

23'-1"

8'

10'

20'

12'

16'

6'

9' TYP

18'-2"

3 L6.2 CONCRETE CURB

AT-GRADE CROSSING WITH CROSS WALK STRIPING 3 L6.7

REVISED PARENT DROP-OFF LANE: (24-25) POTENTIAL SPACES

LOADING ZONE SIGN

STOP SIGN

582.91'

UTILITIES See Civil

20' FIRE

24'

8'

ENTRY DRIVE LOCATION
Drive location shifted north from existing location

2 L6.7 1 L6.8 2 L6.8 ADA PARKING AND SIGNAGE

STOP SIGN
To control vehicle passage from existing north parking lot

FIRE LANE/EMERGENCY ACCESS
20-ft width

STOP SIGN

TURN SIGNAGE
"Left turns prohibited between the hours of 7am-8am and 1:30pm-2:30pm, Mon-Fri, when school is in session."

3 L6.2 CONCRETE CURB

4 L6.2 CONCRETE CURB AND GUTTER

UTILITY VAULTS
See Civil

(E) STORMWATER

EXISTING UTILITY EASEMENT
15-ft width

(E) FENCE & WALL
To remain

(E) STORMWATER

DO NOT ENTER SIGN

(E) FENCE
To remain

(E) UTILITY

(E) WALK
To Remain

SW 113TH AVENUE

(E) DRIVEWAY

49.73'

412.08'

B2 LANDSCAPE BUFFER
Per BDC 60.05.25.13 (C)
5-ft. width
See Note 2.

3'1"

SW CENTER STREET

SIGNIFICANT INDIVIDUAL TREE

FRONT YARD SETBACK
Width: 10-ft.

4-ft HEIGHT VINYL COATED BLACK

SIGNIFICANT INDIVIDUAL TREE

SIGNIFICANT INDIVIDUAL TREE

TURN SIGNAGE
"Left turns prohibited (except buses) between the hours of 7am-8am and 1:30pm-2:30pm, Mon-Fri, when school is in session."

SW 114TH AVE.

PROPOSED MONUMENT SIGN
Coordinate with Electrical.
See Architecture.

PROPERTY LINE/RIGHT-OF-WAY LINE ADJUSTMENT
See Note 3.

0' 10' 20' 40' NORTH

1" = 20'-0"

SITE PLAN - SOUTH ENLARGEMENT

KEY NOTES

1. CONCRETE CURB PAINTED RED WITH "NO PARKING FIRE LANE" TEXT.
2. CONCRETE CURB PAINTED YELLOW.

NOTES

1. See Sheet L1.0 for Site Plan notes.
2. B2 landscape buffer to include 1 tree/30 feet, evergreen shrubs, and ground cover. Per BDC 60.05.25.13(C).
3. Per Condition of Approval #20 of the ACMA High School Rebuild - Facility Review report CU2018-0016/DR2018-0012 an additional one (1) foot of right-of-way along SW Center Street is dedicated to provide a minimum of 31 feet from centerline to meet the City's two-lane collector street standard.

LEGEND

582.91' PROPERTY LINE

LIMIT OF WORK

(E) FENCE
To remain

PROPOSED VINYL CLAD CHAINLINK FENCE (6-ft height)

PROPOSED ORNAMENTAL METAL FENCE (6-ft height)

EASEMENT LINE

(E) TREE
To remain
(6" DBH or greater)
5 ft protection offset shown

PROPOSED TREE
See Tree Plan 5 L6.1 6 L6.1 7 L6.1

CONCRETE PAVING 1 L6.2

CONCRETE - VEHICLE-RATED 2 L6.2
See Civil for profile

CONCRETE PAVING BANDS
Finish: acid wash w/ black sand;
Color: Davis Dark Gray 1 L6.2 2 L6.2

ASPHALT PAVING
See Civil for profile and paving plan

DETECTABLE PAVING 5 L6.3
ADA diamond score pattern; colored concrete (Davis dark gray)

PLANT BED
With bark mulch 1 L6.1 2 L6.1

LAWN

CONCRETE SEATWALL
Finish: Acid wash w/ black sand; 1 L6.4
Color: Davis Dark Gray

NEW BIKE RACKS
(29) racks; (58) spaces 3 L6.3

(E)
EXISTING ELEMENT

CB AD DD
CATCH BASIN, AREA DRAIN, DECK DRAIN
DD cover: 12" sq.
Vertigo by Ironsmith

SIGN
See Sheet L7.0 for 4 L6.7 1 L6.8 2 L6.8 3 L6.8
Signage Diagram

15' 15'
VISION CLEARANCE ZONE
Per City of Beaverton standard

C SD
UTILITIES
See Civil or Electrical

SITE LIGHTING 1 L6.3 2 L6.3
See Electrical
LT-1: FOOTING TYPE 1
LT-2: FOOTING TYPE 2
LT-3: FOOTING TYPE 3
LT-1 LT-2 LT-3

(#)
IRRIGATION SLEEVE 1 L6.0
6" Sleeve at quantity shown in (#)

BID/PERMIT SET

CONDITIONAL USE NUMBER: CU2018-0016
DESIGN REVIEW NUMBER: DR2018-0014
SITE DEVELOPMENT PERMIT NUMBER: TBD
BUILDING PERMIT NUMBER: TBD

CAMERON McCARTHY
LANDSCAPE ARCHITECTURE & PLANNING

185 East Broadway • Eugene, Oregon 97401 • t 541.485.7500
www.cameronmccarthy.com • f 541.485.7505

REGISTERED 538 MATTHEW S. KOEHLER OREGON 11/21/03 LANDSCAPE ARCHITECT

SITE PLAN - SOUTH ENLARGEMENT

ACMA
BEAVERTON SCHOOL DISTRICT

L1.3

74-18109-00
1/31/2019
REVISIONS

DLR Group
Architecture Engineering Planning Interiors

© 2018, DLR Group Architecture & Engineering Inc., an Oregon corporation, ALL RIGHTS RESERVED

C:\Revit\74-18109-00_ACMA_AR_2018_Central_jgooding@dlrgroup.com.rvt
2/23/2018 12:12:44 PM

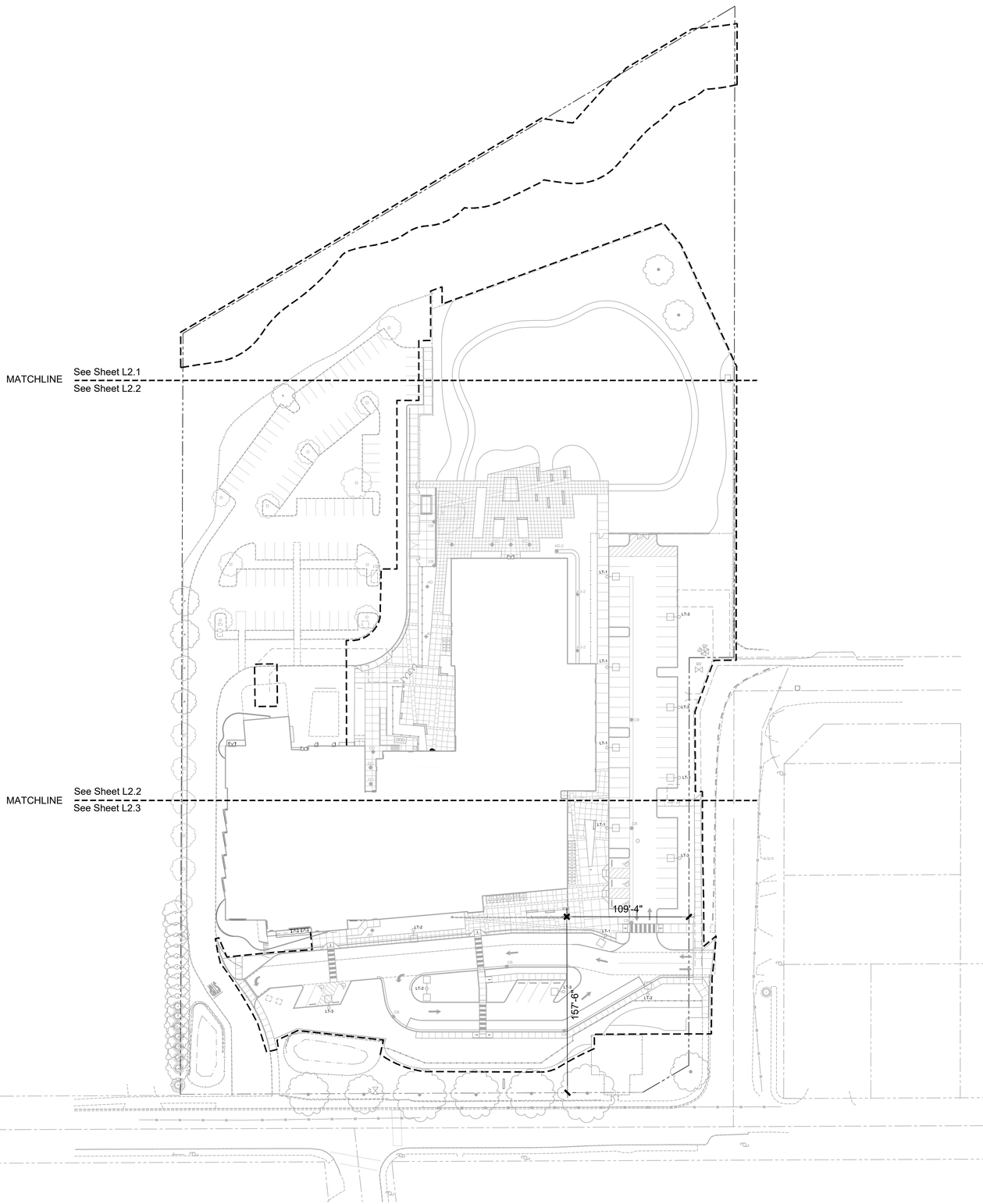

SITE LAYOUT POINT SCHEDULE

See Sheet L2.6 for Site and Paving Layout Point Schedules.

SITE CONTROL POINT SCHEDULE

See Sheet L2.6 for Control Point Schedule.

NOTES

1. All Survey Information Provided by:
   Emerio Design
   8285 SW Nimbus Ave, Suite 180
   Beaverton, OR, 97008
   Ph: 503-746-8812 Fax: 503-639-9592
2. Verify exact locations and routing of existing and proposed underground utilities prior to starting any excavation. Any damage to existing pipes, underground utilities or related facilities to be repaired at contractor's expense in a manner approved by owner's representative.
3. Cease layout work and notify owner's representative of any discrepancies in benchmarks, control points, coordinates, dimensions, degrees, locations, stakes, etc. Obtain approval prior to executing any layout work different from that shown or specified.
4. All concrete paving joints not specifically dimensioned shall be equally spaced between shown or noted limits.
5. All coordinates and dimensions are at face of element (curb, walk, building, or wall) unless noted otherwise.
6. Equally space chainlink fence posts between gate or end posts as shown on the drawings. Spacing not to exceed 8'-0" between posts.
7. All curb radii in parking lots to be 2' unless dimensioned otherwise.
8. See civil drawings for all work within the right-of-way.

0' 25' 50' 100'
1" = 50'-0"
NORTH

LAYOUT PLAN - OVERALL

BID/PERMIT SET

CONDITIONAL USE NUMBER: CU2018-0016
DESIGN REVIEW NUMBER: DR2018-0114
SITE DEVELOPMENT PERMIT NUMBER: TBD
BUILDING PERMIT NUMBER: TBD

CAMERON McCARTHY
LANDSCAPE ARCHITECTURE & PLANNING
165 East Broadway • Eugene Oregon 97401 • t 541.485.7500
www.cameronmccarthy.com • f 541.485.7500

REGISTERED
538
MATTHEW S. KOEHLER
OREGON
11/21/03
LANDSCAPE ARCHITECT

LAYOUT PLAN - OVERALL
ACMA
BEAVERTON SCHOOL DISTRICT

L2.0
74-18109-00
1/31/2019
REVISIONS

DLR Group
Architecture Engineering Planning Interiors

© 2018, DLR Group Architecture & Engineering inc., an Oregon corporation, ALL RIGHTS RESERVED

C:\Revit\74-18109-00_ACMA_AR_2018_Central_jgooding@dlrgroup.com.rvt
2/23/2018 12:12:44 PM

NOTES

1. See Sheet L2.0 for Layout Plan notes.
2. See Sheet L2.0 for Coordinate Point Schedule

LEGEND

- PROPERTY LINE
- LIMIT OF WORK
- CENTERLINE
- EQUAL (EQ. EQ.)
- ALIGN WITH ELEMENT (ALIGN)
- DIMENSION (15')
- DIMENSION From Baseline or Building Face (15')
- RADIUS DIMENSION (R15')
- NORTHING/EASTING COORDINATE POINT See Sheet L2.6 for Coordinate Point Schedules (##)
- SURVEY CONTROL POINT See Sheet L2.6 for Control Point Schedule (##)
- CATCH BASIN, AREA DRAIN, DECK DRAIN See Civil (CB AD DD)
- SITE LIGHTING See Site Plan and Electrical

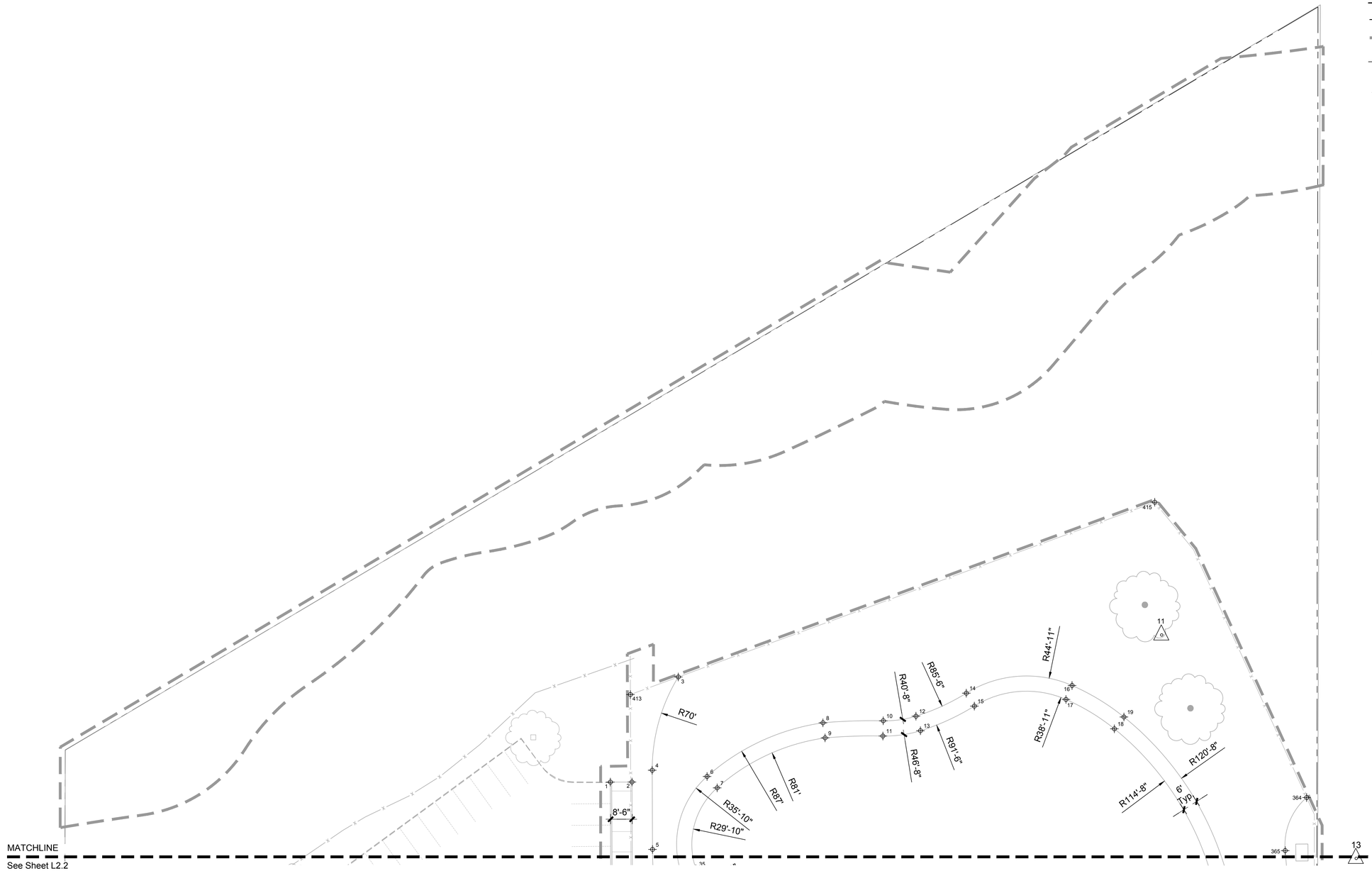

0' 10' 20' 40' NORTH

1" = 20'-0"

LAYOUT PLAN - NORTH ENLARGEMENT

BID/PERMIT SET

CONDITIONAL USE NUMBER: CU2018-0016
DESIGN REVIEW NUMBER: DR2018-0114
SITE DEVELOPMENT PERMIT NUMBER: TBD
BUILDING PERMIT NUMBER: TBD

CAMERON McCARTHY
LANDSCAPE ARCHITECTURE & PLANNING

REGISTERED LANDSCAPE ARCHITECT
538
MATTHEW S. KOEHLER
OREGON
1/12/03

LAYOUT PLAN - NORTH ENLARGEMENT

ACMA
BEAVERTON SCHOOL DISTRICT

L2.1
74-18109-00
1/31/2019
REVISIONS
.

DLR Group
Architecture Engineering Planning Interiors

© 2018, DLR Group Architecture & Engineering inc., an Oregon corporation, ALL RIGHTS RESERVED

C:\Revit\74-18109-00_ACMA_AR_2018_Central_jgooding@dlrgroup.com.rvt
2/23/2018 12:12:44 PM

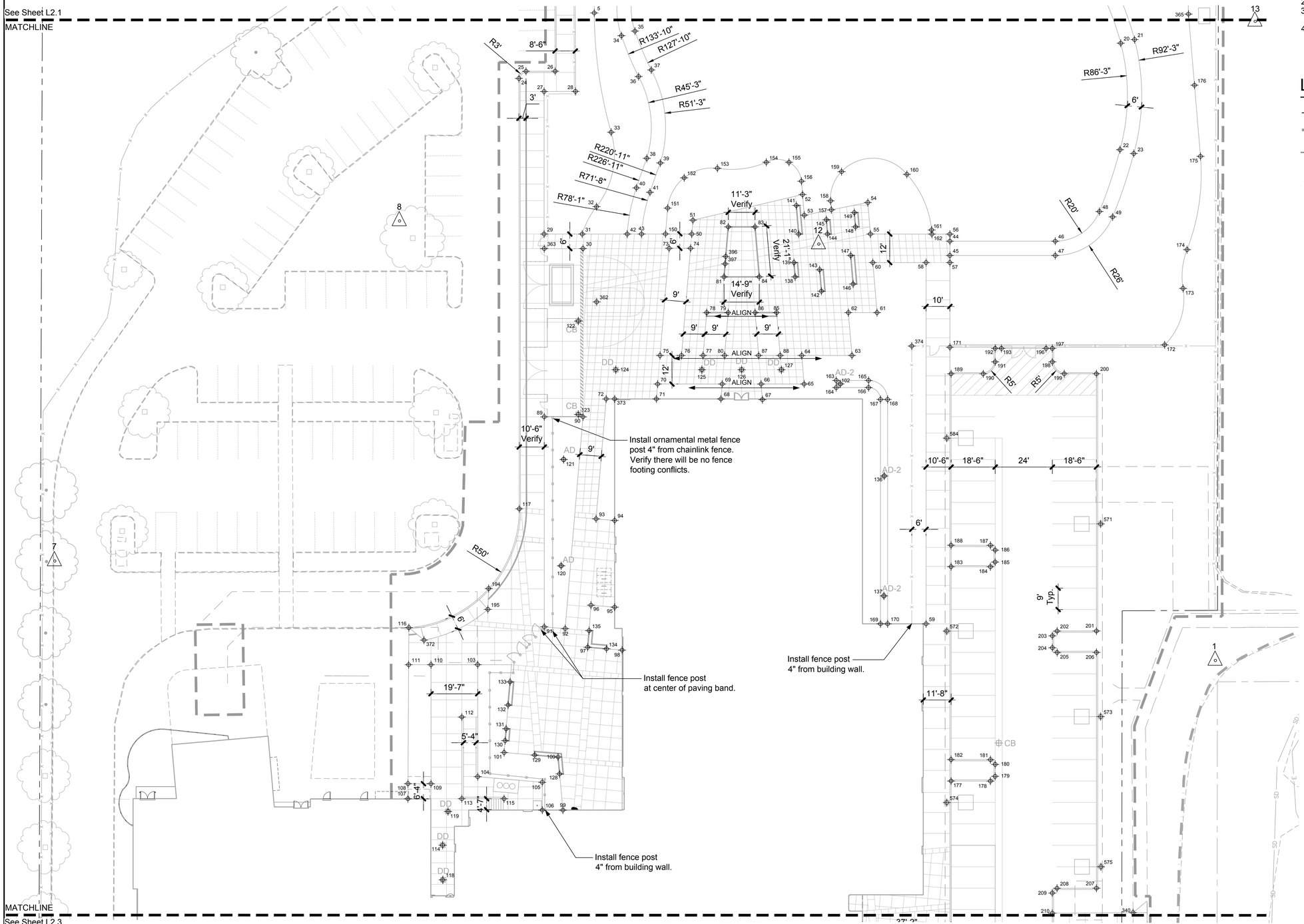

NOTES

1. See Sheet L2.0 for Layout Plan notes.
2. See Sheet L2.0 for Coordinate Point Schedule
3. See Sheets L2.4 and L2.5 for Concrete Scoring Enlargements
4. All radii 2-ft. unless otherwise noted.

LEGEND

	PROPERTY LINE
	LIMIT OF WORK
	CENTERLINE
EQ. EQ.	EQUAL
ALIGN	ALIGN WITH ELEMENT
15'	DIMENSION
15'	DIMENSION From Baseline or Building Face
R15'	RADIUS DIMENSION
##	NORTHING/EASTING COORDINATE POINT See Sheet L2.6 for Coordinate Point Schedules
##	SURVEY CONTROL POINT See Sheet L2.6 for Control Point Schedule
CB AD DD	CATCH BASIN, AREA DRAIN, DECK DRAIN See Civil
	SITE LIGHTING See Site Plan and Electrical

0' 10' 20' 40'
1" = 20'-0"
NORTH

LAYOUT PLAN - CENTRAL ENLARGEMENT

BID/PERMIT SET

CONDITIONAL USE NUMBER: CU2018-0016
DESIGN REVIEW NUMBER: DR2018-0114
SITE DEVELOPMENT PERMIT NUMBER: TBD
BUILDING PERMIT NUMBER: TBD

CAMERON McCARTHY
LANDSCAPE ARCHITECTURE & PLANNING
100 East Broadway • Eugene Oregon 97401 • t 541.485.7555
www.cameronmccarthy.com • f 541.485.7559

REGISTERED
538
MATTHEW S. KOEHLER
OREGON
11/21/03
LANDSCAPE ARCHITECT

LAYOUT PLAN - CENTRAL ENLARGEMENT
ACMA
BEAVERTON SCHOOL DISTRICT

L2.2
74-18109-00
1/31/2019
REVISIONS

DLR Group
Architecture Engineering Planning Interiors

© 2018, DLR Group Architecture & Engineering Inc., an Oregon corporation. ALL RIGHTS RESERVED

C:\Revit\74-18109-00_ACMA_AR_2018_Central_jgooding@dlrgroup.com.rvt
2/23/2018 12:12:44 PM

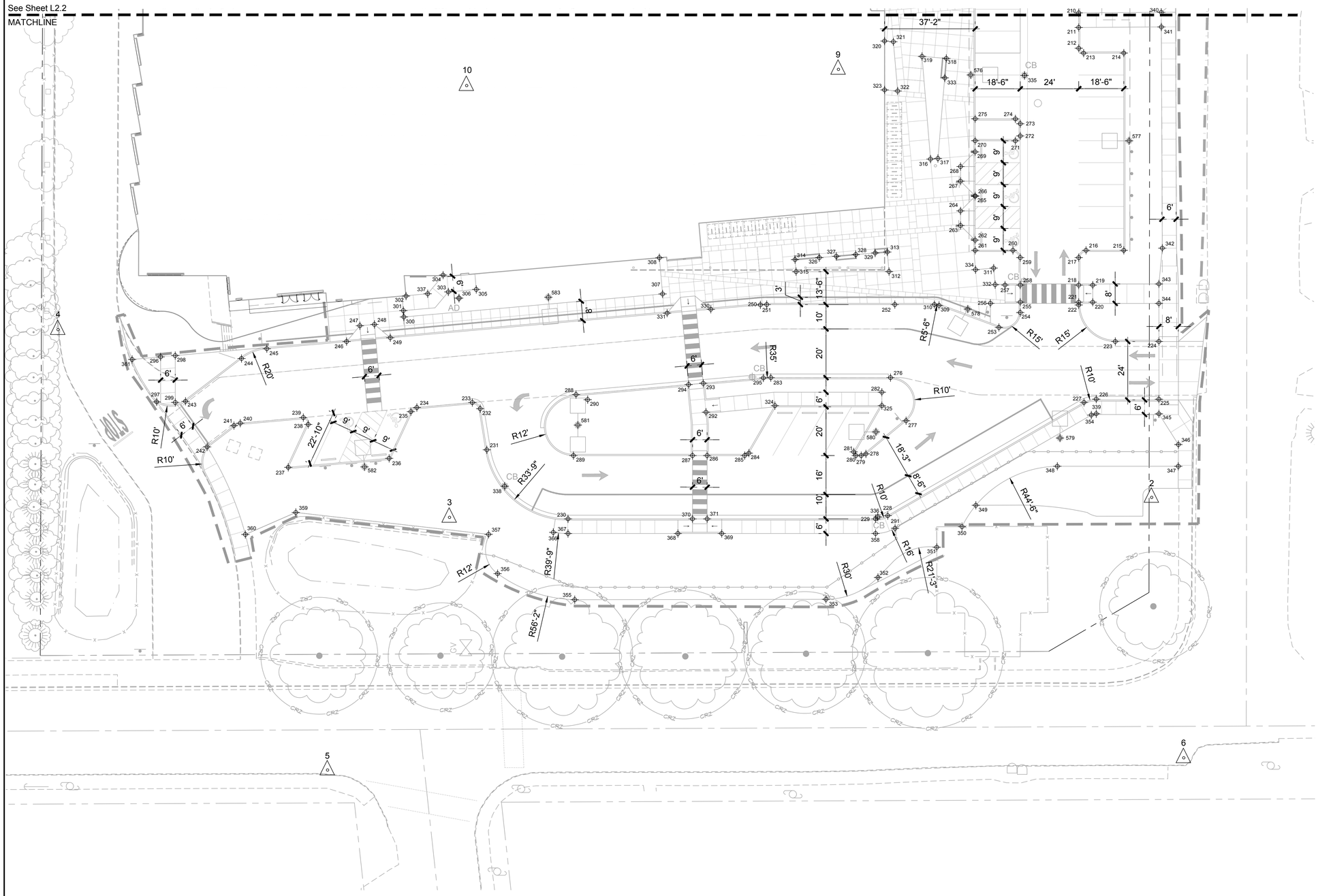

NOTES

1. See Sheet L2.0 for Layout Plan notes.
2. See Sheet L2.0 for Coordinate Point Schedule
3. See Sheets L2.4 and L2.5 for Concrete Scoring Enlargements
4. All radii 2-ft. unless otherwise noted.

LEGEND

- PROPERTY LINE
- LIMIT OF WORK
- CENTERLINE
- EQUAL (EQ. — EQ.)
- ALIGN WITH ELEMENT (ALIGN)
- DIMENSION (15')
- DIMENSION From Baseline or Building Face (15')
- RADIUS DIMENSION (R15')
- NORTHING/EASTING COORDINATE POINT See Sheet L2.6 for Coordinate Point Schedules (##)
- SURVEY CONTROL POINT See Sheet L2.6 for Control Point Schedule (##)
- CATCH BASIN, AREA DRAIN, DECK DRAIN See Civil (CB AD DD)

LAYOUT PLAN - SOUTH ENLARGEMENT

0' 10' 20' 40'
1" = 20'-0"
NORTH

BID/PERMIT SET

CONDITIONAL USE NUMBER: CUD18-0016
DESIGN REVIEW NUMBER: DR2018-0114
SITE DEVELOPMENT PERMIT NUMBER: TBD
BUILDING PERMIT NUMBER: TBD

CAMERON McCARTHY
LANDSCAPE ARCHITECTURE & PLANNING
www.cameronmccarthy.com
REGISTERED LANDSCAPE ARCHITECT
538
MATTHEW S. KOEHLER
OREGON
1/12/03

LAYOUT PLAN - SOUTH ENLARGEMENT

ACMA
BEAVERTON SCHOOL DISTRICT

L2.3
74-18109-00
1/31/2019
REVISIONS

DLR Group
Architecture Engineering Planning Interiors

© 2018, DLR Group Architecture & Engineering Inc., an Oregon corporation. ALL RIGHTS RESERVED

C:\Revit\74-18109-00_ACMA_AR_2018_Central_jgooding@dlrgroup.com.rvt
2/23/2018 12:12:44 PM

NOTES

1. See Sheet L2.0 for Layout Plan notes.
2. See Sheet L2.0 for Coordinate Point Schedule
3. Provide score joints at locations and alignments shown. Provide shop drawings with dimensions for approval from Owner's Representative for any adjustments.

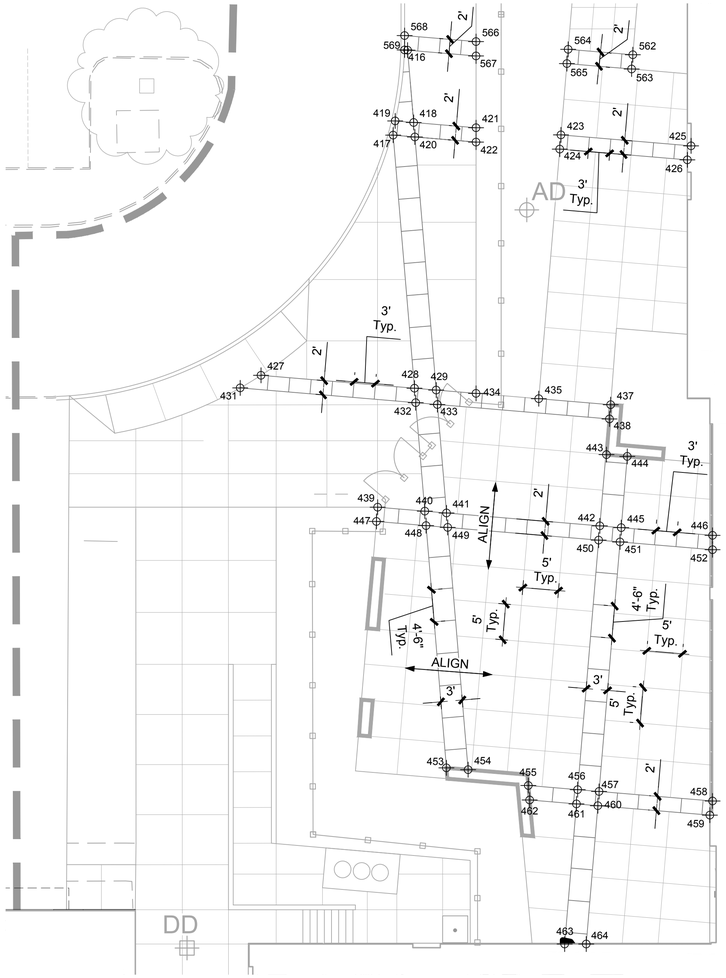

PAVING LAYOUT PLAN - ENLARGEMENT

0' 5' 10' 20' NORTH

1" = 10'-0"

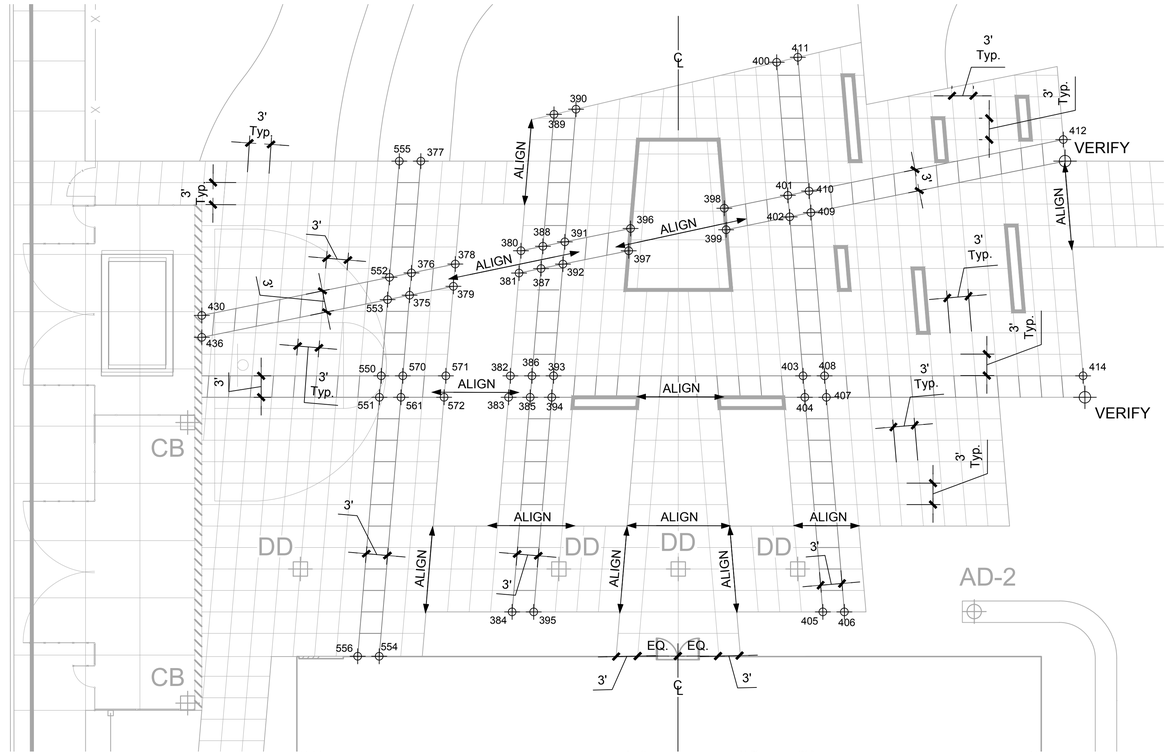

PAVING LAYOUT PLAN - ENLARGEMENT

0' 5' 10' 20' NORTH

1" = 10'-0"

BID/PERMIT SET

CONDITIONAL USE NUMBER: CU2018-0016
DESIGN REVIEW NUMBER: DR2018-0114
SITE DEVELOPMENT PERMIT NUMBER: TBD
BUILDING PERMIT NUMBER: TBD

CAMERON McCARTHY
LANDSCAPE ARCHITECTURE & PLANNING
100 East Broadway • Eugene Oregon 97401 • v 541.485.7555
www.cameronmccarthy.com • f 541.485.7555

REGISTERED LANDSCAPE ARCHITECT
538
MATTHEW S. KOEHLER
OREGON
11/21/03

PAVING LAYOUT PLAN - ENLARGEMENT

ACMA
BEAVERTON SCHOOL DISTRICT

L2.4

74-18109-00
1/31/2019
REVISIONS

DLR Group
Architecture Engineering Planning Interiors

© 2018, DLR Group Architecture & Engineering Inc., an Oregon corporation. ALL RIGHTS RESERVED

C:\Revit\74-18109-00_ACMA_AR_2018_Central_jgooding@dlrgroup.com.rvt
2/23/2018 12:12:44 PM

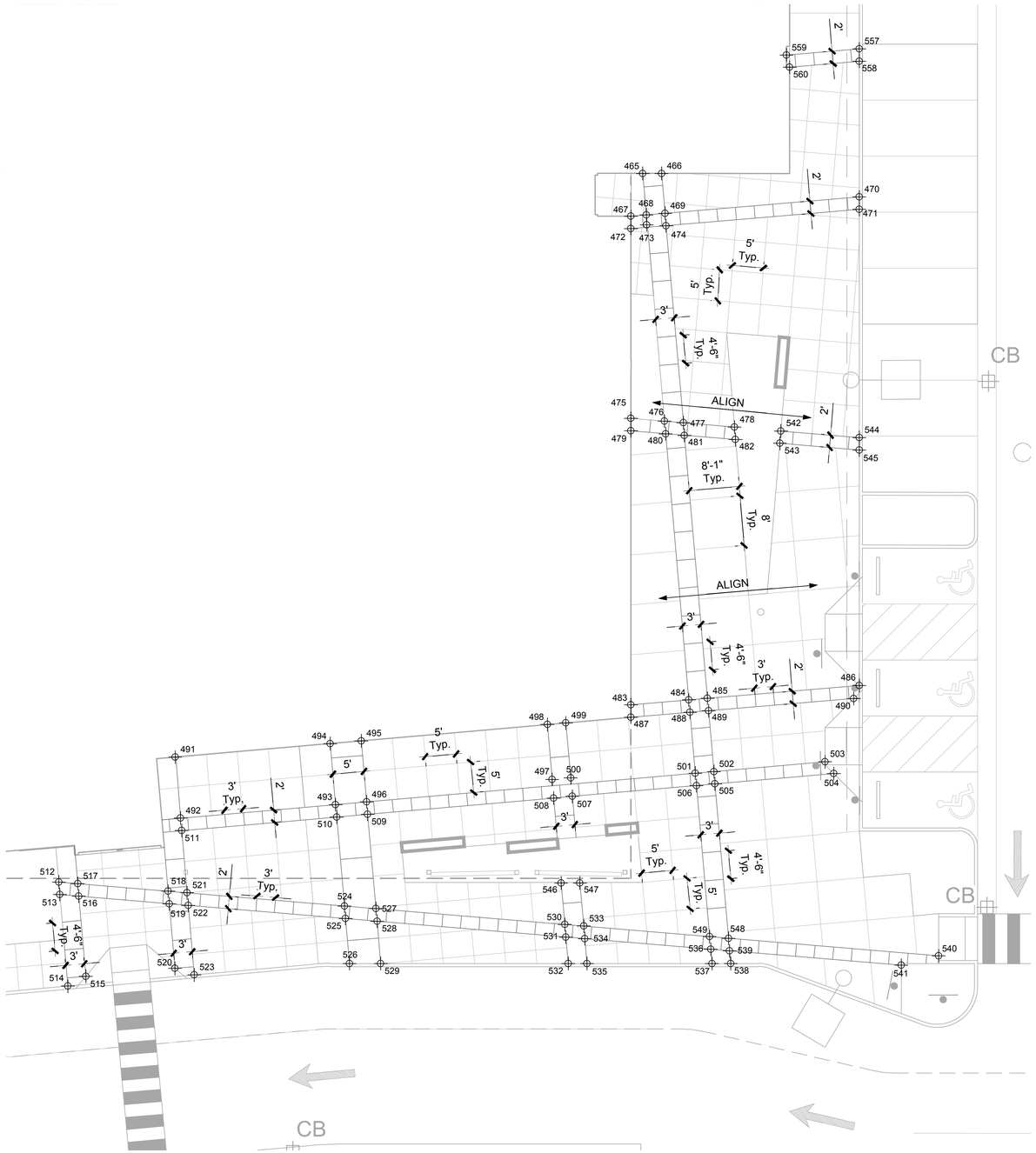

NOTES

1. See Sheet L2.0 for Layout Plan notes.
2. See Sheet L2.0 for Coordinate Point Schedule.
3. Provide score joints at locations and alignments shown. Provide shop drawings with dimensions for approval from Owner's Representative for any adjustments.

PAVING LAYOUT PLAN - ENLARGEMENT

1" = 10'-0"

BID/PERMIT SET

CONDITIONAL USE NUMBER: CU2018-0016
DESIGN REVIEW NUMBER: DR2018-014
SITE DEVELOPMENT PERMIT NUMBER: TBD
BUILDING PERMIT NUMBER: TBD

CAMERON McCARTHY
LANDSCAPE ARCHITECTURE & PLANNING
100 East Broadway • Eugene, Oregon 97401 • t 541.485.7500
www.cameronmccarthy.com • f 541.485.7505

REGISTERED LANDSCAPE ARCHITECT
538
MATTHEW S. KOEHLER
OREGON
11/2/03

PAVING LAYOUT PLAN - ENLARGEMENT

ACMA
BEAVERTON SCHOOL DISTRICT

L2.5

74-18109-00
1/31/2019
REVISIONS
.

DLR Group
Architecture Engineering Planning Interiors

© 2018, DLR Group Architecture & Engineering Inc., an Oregon corporation. ALL RIGHTS RESERVED

C:\Revit\74-18109-00_ACMA_AR_2018_Central_jpooding@dlrgroup.com.rvt
2/23/2018 12:12:44 PM