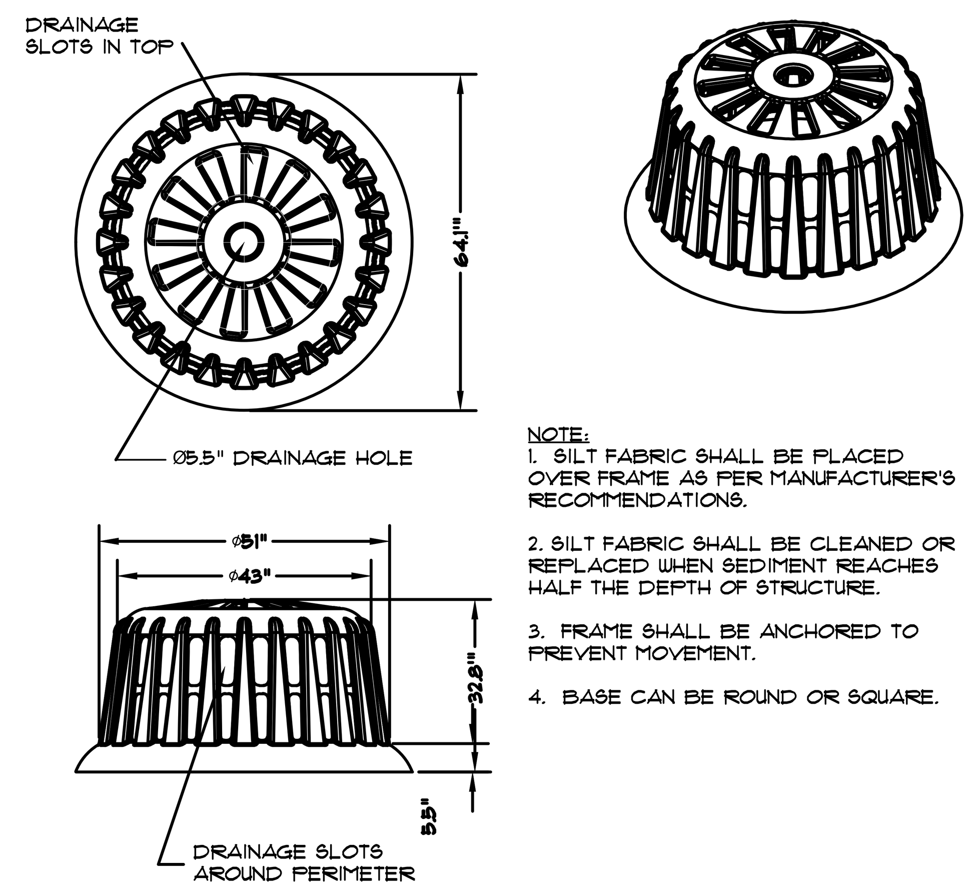

NOTE:
1. SILT FABRIC SHALL BE PLACED OVER FRAME AS PER MANUFACTURER'S RECOMMENDATIONS.
2. SILT FABRIC SHALL BE CLEANED OR REPLACED WHEN SEDIMENT REACHES HALF THE DEPTH OF STRUCTURE.
3. FRAME SHALL BE ANCHORED TO PREVENT MOVEMENT.
4. BASE CAN BE ROUND OR SQUARE.

Sd2-SS TEMPORARY SEDIMENT TRAP

NOT TO SCALE

CONCRETE WASHOUT AREA

1. SITING:
CONCRETE WASHOUT FACILITIES SHALL NOT BE PLACED WITHIN 50 FT. OF STORM DRAINS, OPEN DITCHES, OR STATE WATERS. THE CONCRETE WASHOUT FACILITIES SHALL BE PLACED IN A LOCATION THAT ALLOWS CONVENIENT ACCESS FOR CONCRETE TRUCKS. APPROPRIATE GRAVEL OR ROCK SHALL COVER PATHS TO CONCRETE WASHOUT FACILITIES, UNLESS THEY ARE LOCATED IN DEVELOPED AREAS. THE NUMBER OF FACILITIES SHALL BE DETERMINED BY THE ENGINEER AND SHOWN ACCORDINGLY ON PLANS.

2. INSPECTION:
ALL CONCRETE WASHOUT FACILITIES SHALL BE INSPECTED DAILY TO DETERMINE IF THEY HAVE BEEN FILLED TO 75 (SEVENTY-FIVE) PERCENT CAPACITY, ENSURE THAT PLASTIC LININGS ARE INTACT AND SIDEWALLS AND/OR HAY BALES HAVE NOT BEEN DAMAGED TO DAILY CONSTRUCTION ACTIVITIES.

3. MATERIAL REMOVAL:
a. CONCRETE WASHOUT FACILITIES ARE DESIGNED TO PROMOTE EVAPORATION WHERE FEASIBLE. HOWEVER, IF STORED LIQUIDS HAVE NOT EVAPORATED AND THE WASHOUT IS NEARING CAPACITY, VACUUM AND DISPOSE IN AN APPROVED MANNER - CHECK WITH THE LOCAL SANITARY SEWER AUTHORITY TO DETERMINE IF THERE ARE SPECIAL DISPOSAL REQUIREMENTS FOR CONCRETE WASH WATER. REMOVE LIQUIDS OR COVER THE STRUCTURES BEFORE ANTICIPATED RAINSTORMS TO PREVENT OVERFLOWS OR DURING NON-CONSTRUCTION ACTIVITIES.

b. REMOVE HARDENED SOLIDS WHOLE OR BREAK THEM UP DEPENDING ON THE TYPE OF EQUIPMENT AVAILABLE AT THE SITE. REUSE THE SOLIDS ON-SITE OR HAUL THEM AWAY FOR RECYCLING. CHECK WITH THE LOCAL RECYCLING AGENCY TO DETERMINE IF THE SOLIDS CAN BE USED.

c. WHEN MATERIALS ARE REMOVED FROM THE CONCRETE WASHOUT FACILITIES, BUILD A NEW STRUCTURE OR, IF THE PREVIOUS STRUCTURE IS STILL INTACT, INSPECT THE STRUCTURE FOR SIGNS OF WEAKENING OR DAMAGE AND MAKE ANY NECESSARY REPAIRS. LINE THE STRUCTURE WITH NEW LINING THAT IS FREE OF HOLES OR TEARS AND REPLACE SIGNAGE IF NECESSARY.

4. AT NO TIME SHALL LIQUIDS BE PUMPED INTO STORM DRAINS, OPEN DITCHES, OR STATE WATERS.

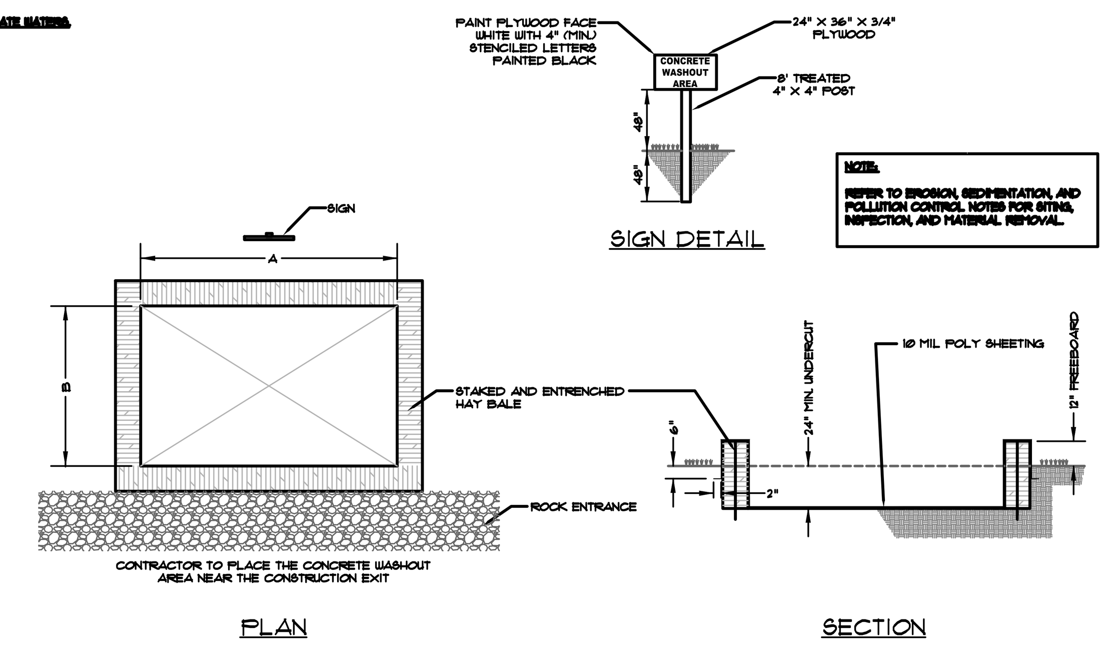

NOTE:
REFER TO EROSION, SEDIMENTATION, AND POLLUTION CONTROL NOTES FOR SITING, INSPECTION, AND MATERIAL REMOVAL.

MINIMUM SIZES FOR CONCRETE WASHOUT

SIZE OF BUILDING (S.F.)	A	B
0-5,000	5 FT.	5 FT.
5,001-50,000	8 FT.	8 FT.
50,001 AND OVER **	12 FT.	12 FT.

** TWO CONCRETE WASHOUTS REQUIRED. ONE SHOULD BE PLACED NEAR MASONRY ACTIVITIES.

CWO TEMPORARY WASH-OUT

NOT TO SCALE

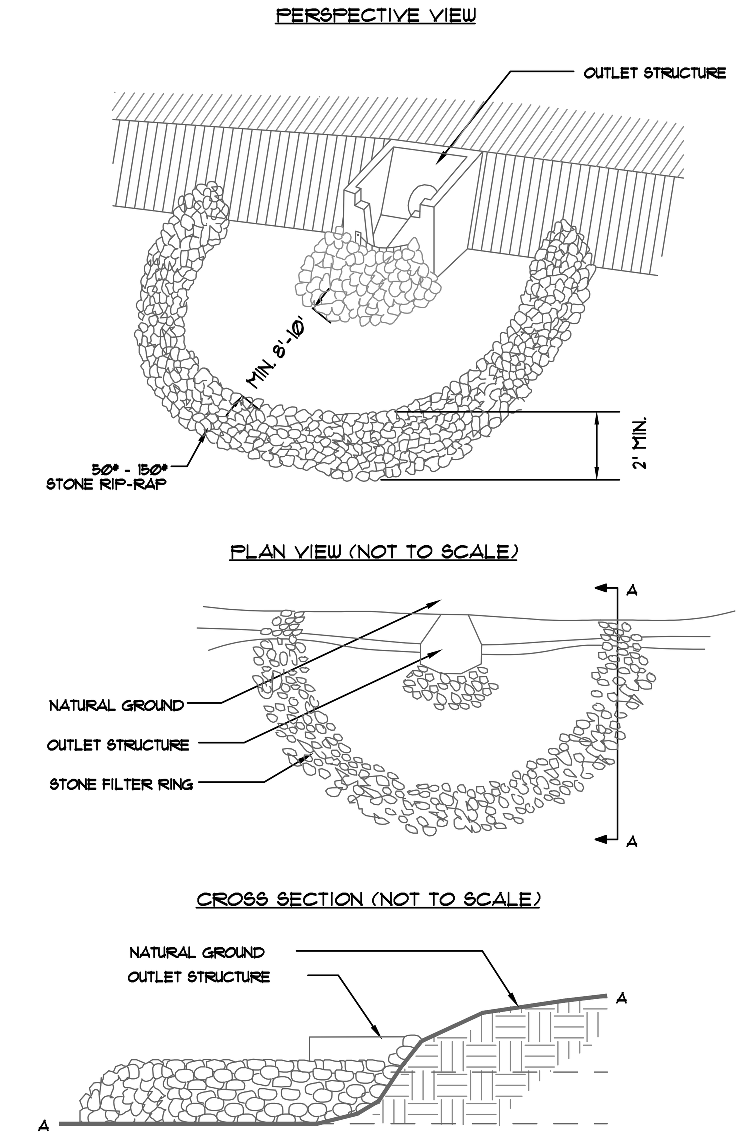

Fr STONE FILTER RING

NOT TO SCALE

TYPICAL INSTALLATION GUIDELINES FOR ROLLED EROSION CONTROL PRODUCTS (RECP)

BLANKET AND MATTING CROSS-SECTIONS

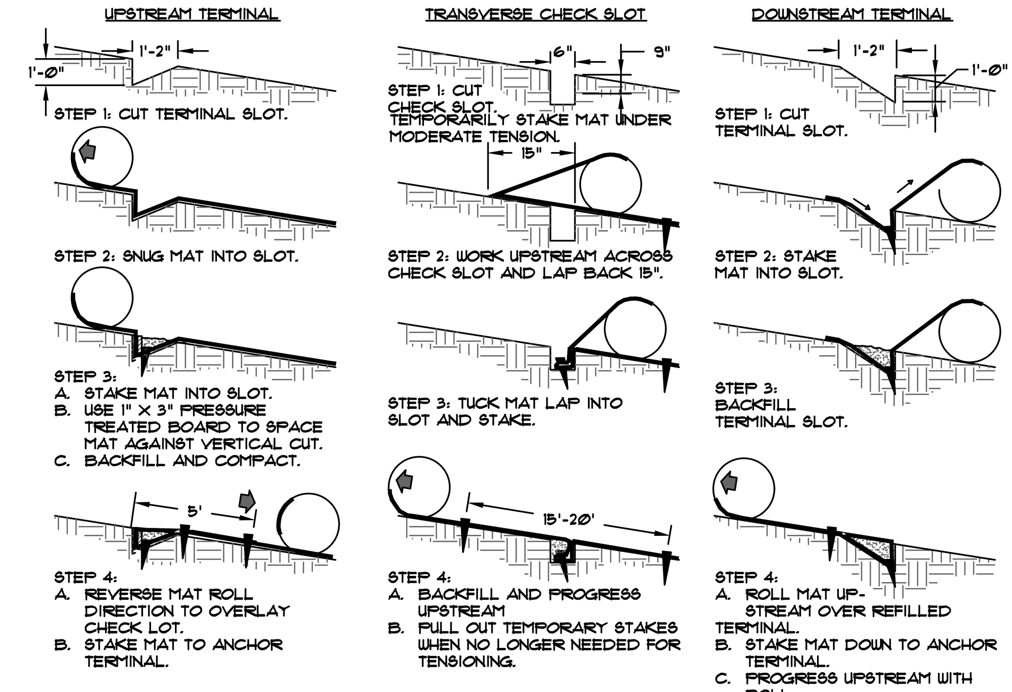

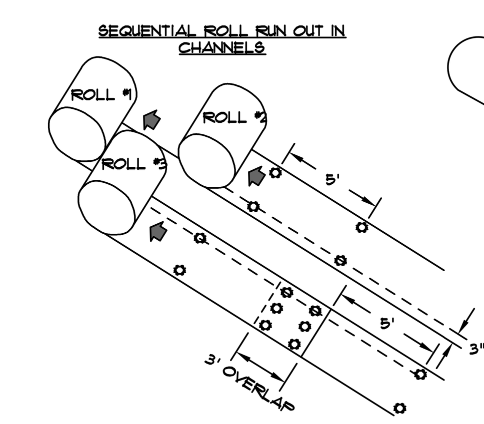

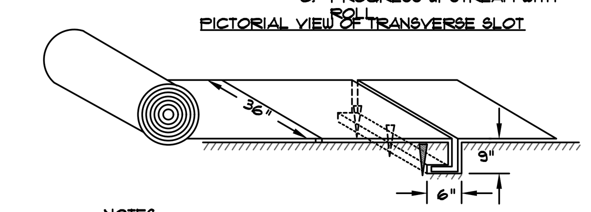

NOTES:
1. START AT DOWNSTREAM TERMINAL AND PROGRESS UPSTREAM.
2. FIRST ROLL IS CENTERED LONGITUDINALLY IN MID-CHANNEL AND PINNED WITH TEMPORARY STAKES TO MAINTAIN ALIGNMENT.
3. SUBSEQUENT ROLLS FOLLOW IN STAGGERED SEQUENCE BEHIND THE FIRST ROLL. USE THE CENTER ROLL FOR ALIGNMENT TO THE CHANNEL CENTER.
4. WORK OUTWARDS FROM THE CHANNEL CENTER TO THE EDGE.
5. USE 3" OVERLAPS AND STAKE AT 5' INTERVALS ALONG THE SEAMS.
6. USE 3' OVERLAPS AND SHINGLE DOWNSTREAM TO CONNECT THE LINING AT THE ROLL ENDS.

Ss SLOPE STABILIZATION

NOT TO SCALE

PIPE OUTLET TO FLAT AREA -- NO WELL DEFINED CHANNEL

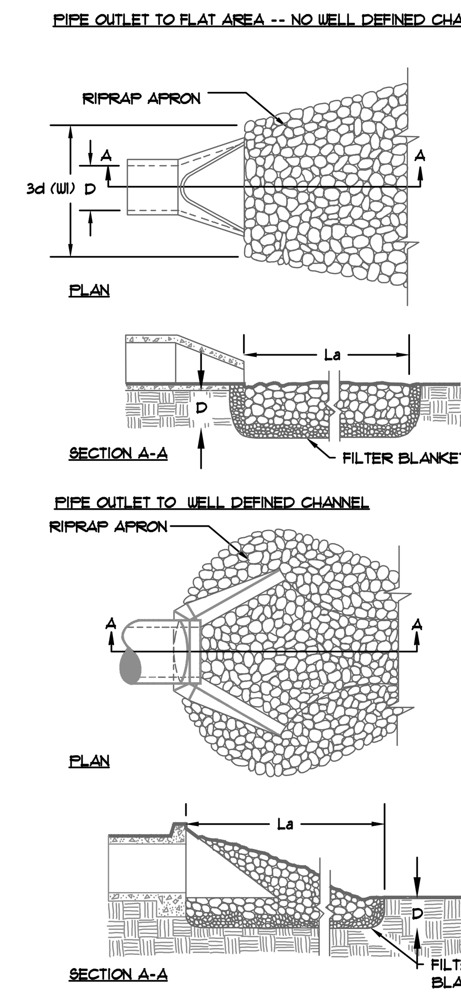

NOTES:
1. La IS THE LENGTH OF THE RIPRAP APRON.
2. D = 1.5 TIMES THE MAXIMUM STONE DIAMETER BUT NOT LESS THAN 6".
3. IN A WELL-DEFINED CHANNEL, EXTEND THE APRON UP THE CHANNEL BANKS TO AN ELEVATION OF 6" ABOVE THE MAXIMUM TAILWATER DEPTH OR TO THE TOP OF THE BANK (WHICHEVER IS LESS).
4. A FILTER BLANKET OR FILTER FABRIC SHOULD BE INSTALLED BETWEEN THE RIPRAP AND THE SOIL FOUNDATION.

GRADED RIP-RAP STONE

FLOW VELOCITY (ft/sec)	N.S.A. *1	SIZE INCHES (SQ. OPENING) MAX	AVG	MIN	PARTICLE WEIGHT (lbs.) *2
2.5	R-1	1 1/2	3/4	NO.8	--
4.5	R-2	3	1 1/2	1	--
6.5	R-3	6	3	2	20
9.0	R-4	12	6	3	60
11.5	R-5	18	9	5	150
13.0	R-6	24	12	7	300
14.5	R-7	30	15	12	700
--	R-8	48	24	15	1500

*1. NATIONAL STONE ASSOCIATION
*2. AT LEAST 50% OF ALL THE INDIVIDUAL STONE PARTICLES MUST WEIGH AT LEAST THE LISTED AMOUNT.

OUTLET PROTECTION CHART

	STRUCT. ID (OUTLET)	D (FT)	Q (CFS)	V (FPS)	Tw (MIN/MAX)	La (FT)	3D (WI) (FT)	W2 (FT)	d50 (FT)	Dmax (FT)	D(depth) (FT)
St#1	D6	2.5	16.79	5.48	MAX	21	7.5	15	1.0	1.5	1.0
St#2	D3	1.5	1.20	3.51	MAX	15	4.5	9	1.0	1.5	1.0
St#3	D1	1.5	7.21		MAX	15	4.5	9	1.0	1.5	1.0
St#4	D57	1.0	3.09	2.75	MAX	12	3.0	6	1.0	1.5	1.0
St#5	D12	2.0	12.42	5.00	MAX	21	6.0	12	1.0	1.5	1.0
St#6	D19	2.0	6.76	4.41	MAX	21	6.0	12	1.0	1.5	1.0
St#7	D21	1.5	5.65	4.11	MAX	18	4.5	9	1.0	1.5	1.0
St#8	D58	1.0	1.03	3.53	MAX	12	3.0	6	1.0	1.5	1.0
St#9	D25	1.5	5.68		MAX	18	4.5	9	1.0	1.5	1.0
St#10	D27	2.0	9.94	4.80	MAX	21	6.0	12	1.0	1.5	1.0
St#11	D31	1.5	5.22		MAX	18	4.5	9	1.0	1.5	1.0
St#12	D35	2.5	11.64	5.03	MAX	21	7.5	15	1.0	1.5	1.0
St#13	D61	1.0	1.07	3.57	MAX	12	3.0	6	1.0	1.5	1.0
St#14	D33	1.5	1.71	3.95	MAX	15	4.5	9	1.0	1.5	1.0
St#15	D70	1.5	4.59	5.16	MAX	15	4.5	9	1.0	1.5	1.0
St#16	D64	2.0	8.35	4.64	MAX	21	6.0	12	1.0	1.5	1.0
St#17	D72	1.5	2.00	4.14	MAX	18	4.5	9	1.0	1.5	1.0
St#18	D38	3.0	27.68	6.23	MAX	21	9.0	18	1.0	1.5	1.0
St#19	D74	2.0	9.84		MAX	21	6.0	12	1.0	1.5	1.0
St#20	D52	2.5	14.68	5.32	MAX	21	7.5	15	1.0	1.5	1.0
St#21	D55	2.5	14.58	5.31	MAX	21	7.5	15	1.0	1.5	1.0
St#22	D50	1.5	1.15	2.75	MAX	18	4.5	9	1.0	1.5	1.0
St#23	D51	1.5	1.15	2.75	MAX	18	4.5	9	1.0	1.5	1.0
St#24	D77	1.5	4.52	6.4	MAX	18	4.5	9	1.0	1.5	1.0
St#25	D78	1.5	4.52	6.4	MAX	18	4.5	9	1.0	1.5	1.0

St RIP RAP OUTLET PROTECTION

NOT TO SCALE

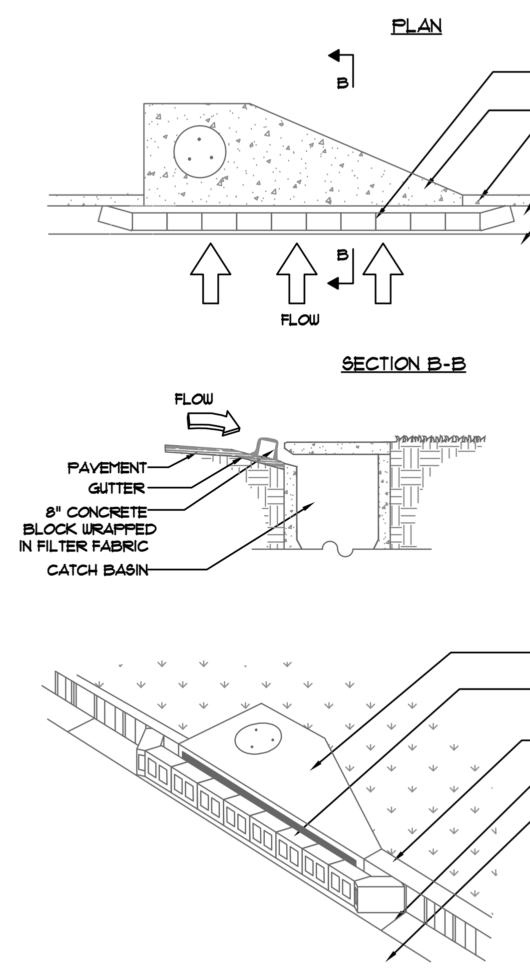

NOTES:
1. INSTALL FILTER AFTER ANY ASPHALT PAVEMENT INSTALLATION.
2. WRAP 8" CONCRETE BLOCKS IN FILTER FABRIC AND SPAN ACROSS CATCH BASIN INLET.
3. FACE OPENINGS IN BLOCKS OUTWARD.
4. LEAVE A GAP OF APPROXIMATELY 4 INCHES BETWEEN THE CURB AND THE FILTERS TO ALLOW FOR OVERFLOW TO PREVENT HAZARDOUS PONDING.
5. INSTALL OUTLET PROTECTION BELOW STORM DRAIN OUTLETS.

Sd2-P CURB INLET FILTER

NOT TO SCALE

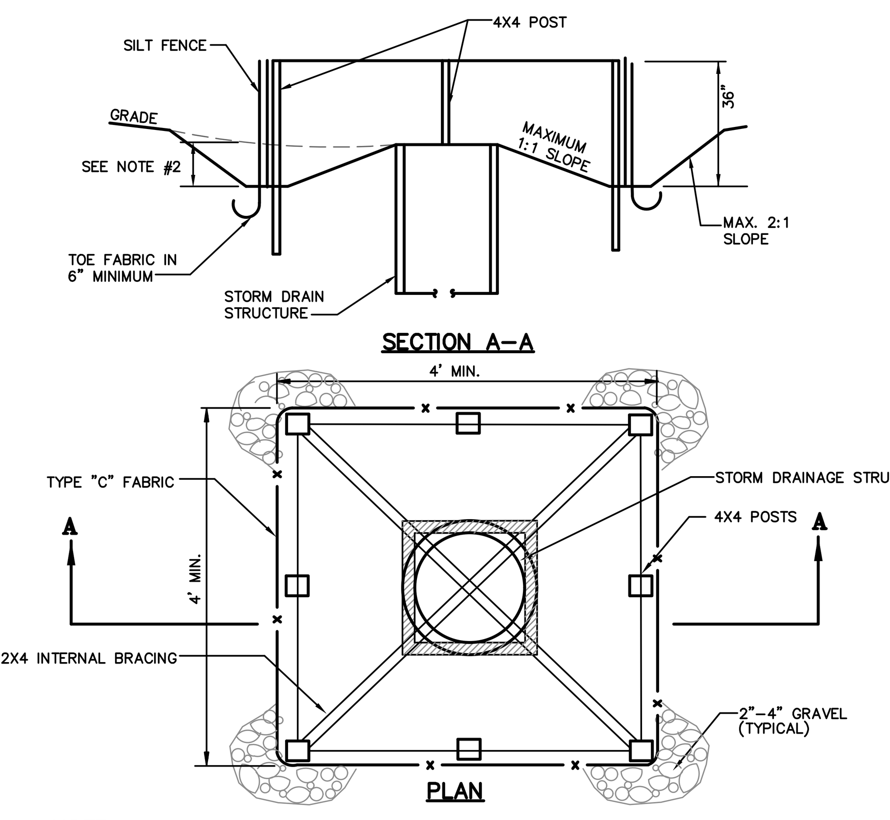

NOTE:
1. CONSTRUCTION OF SEDIMENT TRAP SHALL CONFORM TO THE "MANUAL FOR EROSION AND SEDIMENT CONTROL IN GEORGIA" – CHAPTER 6.
2. FOR MINIMUM EXCAVATION DEPTH SEE STORM DRAINAGE SCHEDULE.

Sd2-F TEMPORARY SEDIMENT TRAP FILTER FABRIC WITH FRAME

NOT TO SCALE

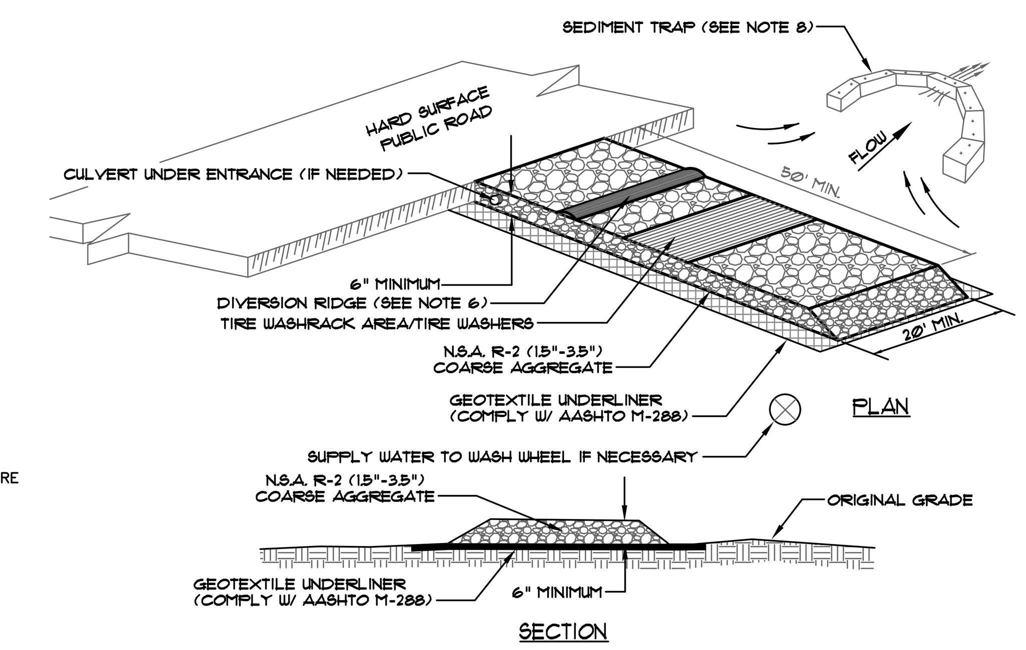

NOTES:
1. AVOID LOCATING ON STEEP SLOPES OR AT CURVES ON PUBLIC ROADS.
2. REMOVE ALL VEGETATION AND OTHER UNSUITABLE MATERIAL FROM THE FOUNDATION AREA, GRADE, AND CROWN FOR POSITIVE DRAINAGE.
3. AGGREGATE SIZE SHALL BE IN ACCORDANCE WITH NATIONAL STONE ASSOCIATION R-2 (1.5"-3.5" STONE).
4. GRAVEL PAD SHALL HAVE A MINIMUM THICKNESS OF 6".
5. PAD WIDTH SHALL BE EQUAL FULL WIDTH AT ALL POINTS OF VEHICULAR EGRESS, BUT NO LESS THAN 20'.
6. A DIVERSION RIDGE SHOULD BE CONSTRUCTED WHEN GRADE TOWARD PAVED AREA IS GREATER THAN 2%.
7. INSTALL PIPE UNDER THE ENTRANCE IF NEEDED TO MAINTAIN DRAINAGE DITCHES.
8. WHEN WASHING IS REQUIRED, IT SHOULD BE DONE ON AN AREA STABILIZED WITH CRUSHED STONE THAT DRAINS INTO AN APPROVED SEDIMENT TRAP OR SEDIMENT BASIN (DIVERT ALL SURFACE RUNOFF AND DRAINAGE FROM THE ENTRANCE TO A SEDIMENT CONTROL DEVICE).
9. WASHRACKS AND/OR TIRE WASHERS MAY BE REQUIRED DEPENDING ON SCALE AND CIRCUMSTANCE. IF NECESSARY, WASHRACK DESIGN MAY CONSIST OF ANY MATERIAL SUITABLE FOR TRUCK TRAFFIC THAT REMOVE MUD AND DIRT.
10. MAINTAIN AREA IN A WAY THAT PREVENTS TRACKING AND/OR FLOW OF MUD ONTO PUBLIC RIGHT-OF-WAYS. THIS MAY REQUIRE TOP DRESSING, REPAIR AND/OR CLEANOUT OF ANY MEASURES USED TO TRAP SEDIMENT.
11. CONTRACTOR SHALL LIMIT CONSTRUCTION TRAFFIC TO DESIGNATED CONSTRUCTION EXITS. IF CONTRACTOR ADDS ADDITIONAL EXITS NOT DESIGNATED ON PLANS, CONTRACTOR IS RESPONSIBLE FOR INSTALLING CONSTRUCTION EXITS PER DETAIL AT EVERY LOCATION USED FOR CONSTRUCTION TRAFFIC.

Co CONSTRUCTION EXIT

NOT TO SCALE

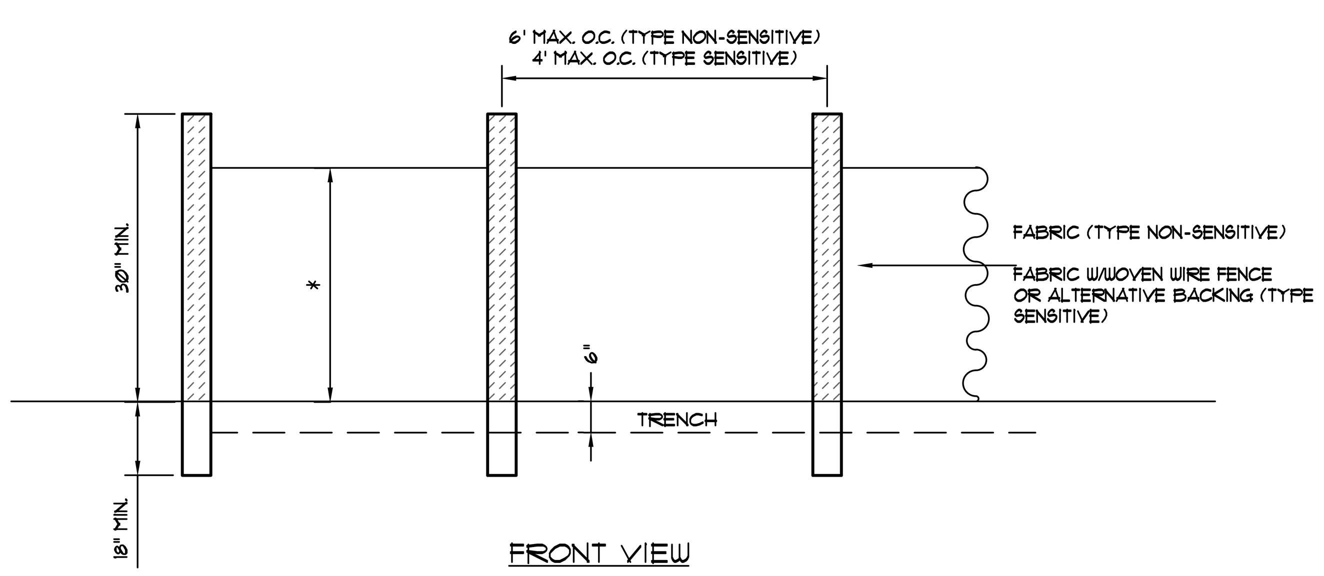

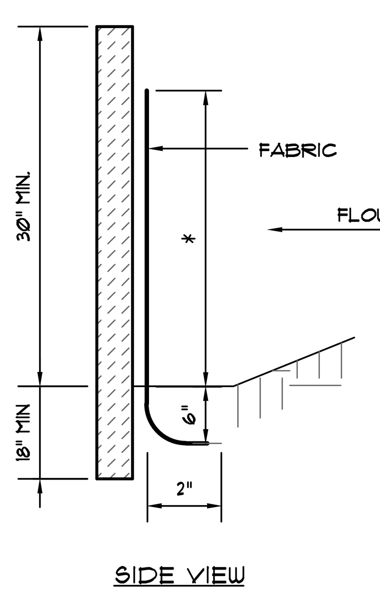

NOTE
1. USE STEEL OR WOOD POSTS OR AS SPECIFIED BY THE EROSION, SEDIMENTATION, AND POLLUTION CONTROL PLAN.
2. HEIGHT (*) IS TO BE SHOWN ON THE EROSION, SEDIMENTATION, AND POLLUTION CONTROL PLAN.
3. THE FABRIC AND WIRE SHOULD BE SECURELY FASTENED TO POSTS AND FABRIC ENDS MUST BE OVERLAPPED A MINIMUM OF 18" OR WRAPPED TOGETHER AROUND A POST TO PROVIDE A CONTINUOUS FABRIC BARRIER AROUND THE INLET.

POST SIZE

TYPE	MIN. LENGTH	TYPE OF POST	SIZE OF POST
NS	4'	SOFT WOOD, OAK, STEEL	3" DIA. OR 2x4, 1.5"x1.5", 1.3lb/ft. MIN.
S	4'	OAK, STEEL	2x2, 1.3lb/ft. MIN.

FASTENERS FOR WOOD POSTS

	GAUGE	CROWN	LEGS	STAPLES/POST
WIRE STAPLES	17 MIN.	3/4" WIDE	1/2" LONG	5 MIN.
	GAUGE	LENGTH	BUTTON HEADS	NAIL/POST
NAILS	14 MIN.	1"	3/4"	4 MIN.

NOTE: FILTER FABRIC MAY ALSO BE ATTACHED TO THE POST BY WIRE, CHORS, AND POCKETS OR ANY OTHER METHOD PROVIDED MINIMUM P-FACTOR, AS REQUIRED BY GSWCC, IS MET.

Sd1 SILT FENCE DETAIL

NOT TO SCALE

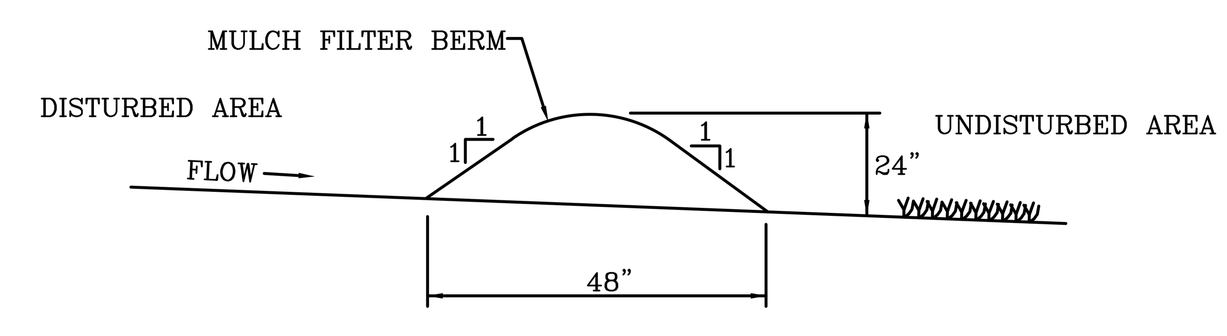

MULCH FILTER BERM

NOT TO SCALE

NOTES:
1. TO BE INSTALLED UPSLOPE OF PERIMETER SILT FENCE.

HAMMOND CREEK MIDDLE SCHOOL
DALTON GEORGIA
DALTON BOARD OF EDUCATION
SCHOOL CODE: 772-0380

JAMES W. BUCKLEY & ASSOCIATES INC. - ARCHITECTS, CIVIL ENGINEERS
SWAINSBORO, ALBANY, ROME, AND SAVANNAH GEORGIA

WARNING: Contractors, subcontractors, vendors and suppliers are advised that the contract documents consist of Architect-reproduced printed, bound, and numbered specifications, Architect-reproduced printed, bound and numbered blue or black line prints, addenda, post-bid addenda, and change orders only. Documents reproduced by parties other than Architect, whether in hard copy or electronic format shall not be considered part of contact documents and do not supersede the provisions of the contact documents. The contractor, subcontractor, vendors, and suppliers solely responsible for verification that information utilized in bidding, development of shop drawings and construction of facility are identical to contact documents.

EROSION CONTROL DETAILS

GEORGIA REGISTERED No. 29636 PROFESSIONAL ENGINEER MATTHEW L. RENAULT

GSWCC LEVEL II
CERT.# 0000008762

UTILITIES PROTECTION CENTER 1-800-282-7411 CALL BEFORE YOU DIG

ISSUED FOR
BID
REVISED: 9/21/18
REVISED: 11/7/18
REVISED: 11/21/18

JAM
DRAWN BY
JJS
CHECKED BY
MLR
APPROVED BY
09/01/18
DATE
22317
PROJECT NO.

SHEET NUMBER
SE2.1

COPYRIGHT (c) 2010. ALL RIGHTS RESERVED