Barton Malow

Design/Construction Services

Troy School District
2004 Bond Program
Troy, MI

Phase I – Three Middle Schools Remodeling & Addition
(Boulan Park, Larson & Smith)
Bid Package # 9361

PROJECT MANUAL

Issue Date: November 20, 2006
Pre-Bid Conference: November 21, 2006 @ 3:30PM
Bid Due Date: December 19, 2006 @ 3PM

SECTION 00010
PROJECT MANUAL
TABLE OF CONTENTS

INTRODUCTORY INFORMATION		ISSUE DATE
00001	Project Manual Cover	November 20, 2006
00010	Table of Contents	November 20, 2006
00015	List of Drawings	November 20, 2006
00030	Information and Identities	November 20, 2006

BIDDING REQUIREMENTS*		
00100	Advertisement to Bid	November 20, 2006
00200	Instructions to Bidders	November 20, 2006
00210	Description of Work/Special Provisions	November 20, 2006
00220	Work Scopes	November 20, 2006
00230	Schedule and Phasing	November 20, 2006
00400	Bid Proposal Form	November 20, 2006
00410	Familial Relationship Disclosure Form	November 20, 2006
00430	Bid Form Supplements (Affidavit of Bidder – Compliance with School Safety Initiative Legislation)	November 20, 2006

CONTRACTING REQUIREMENTS		ISSUE DATE
00500	Agreement Form (Contract)	November 20, 2006
00610	Bonds	November 20, 2006
00620	Insurance	November 20, 2006
00700	General Conditions of the Contract	November 20, 2006
00800	Supplementary General Conditions	November 20, 2006
00810	On-Site Project Safety and Loss Control Program	November 20, 2006
00840	Hazardous Materials	November 20, 2006
00870	Labor Relations	November 20, 2006
00880	Regulatory Requirements	November 20, 2006
00890	Permits	November 20, 2006

DIVISION 1 GENERAL REQUIREMENTS		ISSUE DATE
01140	Use of Premises	November 20, 2006
01210	Allowances	November 20, 2006
01250	Changes in the Work	November 20, 2006
01290	Payment Procedures	November 20, 2006
01310	Meetings	November 20, 2006
01320	Communications	November 20, 2006
01330	Submittals	November 20, 2006
01360	Coordination (General)	November 20, 2006
01400	Quality Requirements	November 20, 2006
01450	Testing and Inspection Services	November 20, 2006
01510	Fire Precautions and Protection	November 20, 2006
01520	Temporary Construction Facilities & Controls	November 20, 2006
01530	Field Engineering and Layout	November 20, 2006

01540	Cutting and Patching	November 20, 2006
01550	Clean-up and Final Cleaning	November 20, 2006
01600	Forms	November 20, 2006
01630	Product Substitutions	November 20, 2006
01700	Contract Close-out	November 20, 2006
01720	Project Record Documents	November 20, 2006
01730	Operations and Maintenance Data	November 20, 2006
01740	Warrantees and Guarantees	November 20, 2006
01750	Systems Demonstration, Operational Instructions and Start-up	November 20, 2006

DIVISIONS 2 THROUGH 16 TECHNICAL SPECIFICATIONS

Prepared by Kingscott Architects, Engineering, Interior Design are issued under a separate Cover

DOCUMENTS ISSUED FOR BID PACKAGE NUMBER # 9361

Kingscott Architects, Engineering, Interior Design Specifications dated **November 8, 2006**

Construction Documents for Boulan Park MS Remodeling prepared by Kingscott Architects, Engineering, Interior Design Dated **November 8, 2006**

Construction Documents for Larson MS Remodeling prepared by Kingscott Architects, Engineering, Interior Design Dated **November 8, 2006**

Construction Documents for Smith MS Remodeling and Additions prepared by Kingscott Architects, Engineering, Interior Design Dated **November 8, 2006**

Barton Malow Company Project Manual dated **November 20, 2006**

Professional Service Industries, Inc. Geotechnical Exploration and Engineering Report dated **September 20, 2006** (included behind Specification Section 02300 – Earthwork)

SECTION 00030
PROJECT MANUAL
INFORMATION AND IDENTITIES

This Project Manual contains the Bidding and Contract Requirements for Troy School District – Phase I – Three Middle Schools Remodeling and Addition (Boulan Park, Larson & Smith), Bid Package No. 9361 in Troy, Michigan. Review of this Manual is important in fulfilling the Contract Requirements. Any questions regarding this Manual or any of the Bidding or Contract Requirements should be directed to the Barton Malow Company.

PROJECT:	**Troy School District** **2004 Bond Program** **Phase I – Three Middle Schools Remodeling & Addition** **(Boulan Park, Larson and Smith)** **Bid Package No. 9361**
OWNER:	**Troy School District** **4400 Livernois Road** **Troy, MI 48098**
Construction Manager:	**BARTON MALOW COMPANY** **1301 Boyd** **Troy, MI 48083** **Leah Bossert, Project Manager** **Phone: 248-823-4631** **Fax: 248-823-4672** **Email: leah.bossert@bartonmalow.com**
ARCHITECT:	**Kingscott Architecture, Engineering, Interior Design** **229 East Michigan, Suite 335** **Kalamazoo, MI 49007-6403**

SECTION 00015
PROJECT MANUAL
LIST OF DRAWINGS
BOULAN PARK MIDDLE SCHOOL

T1	11/08/06	TITLE SHEET
T2	11/08/06	DATA SHEET
SITE		
C1.0	11/08/06	SURVEY OF EXISTING CONDITIONS
C1.1	11/08/06	SITE DEMOLITION PLAN/SITE LAYOUT PLAN
C1.2	11/08/06	SITE GRADING PLAN AND EROSION CONTROL PLAN, SITE DETAILS
ARCHITECTURAL		
A0.0	11/08/06	CODE COMPLIANCE PLAN
D1.1	11/08/06	DEMOLITION PLAN – UNIT 100
D1.1a	11/08/06	DEMOLITION PLAN – UNIT 100A
D1.2	11/08/06	DEMOLITION PLAN – UNIT 200
D1.2a	11/08/06	DEMOLITION PLAN – UNIT 200A
D1.3	11/08/06	DEMOLITION PLAN – UNIT 300
D1.3a	11/08/06	DEMOLITION PLAN – UNIT 300A
A1.1	11/08/06	FLOOR PLAN – UNIT 100
A1.2	11/08/06	FLOOR PLAN – UNIT 200
A1.2a	11/08/06	FLOOR PLAN – UNIT 200A
A2.1	11/08/06	REFLECTED CEILING PLAN - UNIT 100
A2.1a	11/08/06	REFLECTED CEILING PLAN – UNIT 100A
A2.2	11/08/06	REFLECTED CEILING PLAN – UNIT 200
A2.2a	11/08/06	REFLECTED CEILING PLAN – UNIT 200A
A2.3	11/08/06	REFLECTED CEILING PLAN – UNIT 300
A2.3a	11/08/06	REFLECTED CEILING PLAN – UNIT 300A
A5.1	11/08/06	BUILDING DETAILS
A6.1	11/08/06	DOOR SCHEDULE AND DETAILS
MECHANICAL		
FS1.1	11/08/06	FIRE SUPPRESSION COMPOSITE PLAN
M0.1	11/08/06	HVAC DEMOLITION PLAN – UNIT 100
M0.1a	11/08/06	HVAC DEMOLITION PLAN – UNIT 100A
M0.2	11/08/06	HVAC DEMOLITION PLAN – UNIT 200
M0.2a	11/08/06	HVAC DEMOLITION PLAN – UNIT 200A
M0.3	11/08/06	HVAC DEMOLITION PLAN – UNIT 300
M0.3a	11/08/06	HVAC DEMOLITION PLAN – UNIT 300A
M2.1	11/08/06	HYDRONIC PLAN – UNIT 100
M2.1a	11/08/06	HYDRONIC PLAN – UNIT 100A
M3.1	11/08/06	HVAC PLAN – UNIT 100
M3.1a	11/08/06	HVAC PLAN – UNIT 100A
M3.2	11/08/06	HVAC PLAN – UNIT 200
M3.2a	11/08/06	HVAC PLAN – UNIT 200A
M3.3	11/08/06	HVAC PLAN – UNIT 300
M3.3a	11/08/06	HVAC PLAN – UNIT 300A

M4.1	11/08/06	MECHANICAL ENLARGEMENT PLANS
M4.2	11/08/06	MECHANICAL ENLARGEMENT PLANS
ME1.1	11/08/06	MECHANICAL/ELECTRICAL SCHEDULES AND DETAILS

ELECTRICAL

E1.1	11/08/06	LIGHTING AND POWER PLAN – UNIT 100
E1.1a	11/08/06	LIGHTING AND POWER PLAN – UNIT 100
E1.2	11/08/06	LIGHTING AND POWER PLAN – UNIT 200
E1.2a	11/08/06	LIGHTING AND POWER PLAN – UNIT 200
E1.3	11/08/06	LIGHTING AND POWER PLAN – UNIT 300
E1.3a	11/08/06	LIGHTING AND POWER PLAN – UNIT 300
E3.1	11/08/06	ELECTRICAL DETAILS
E3.2	11/08/06	ELECTRICAL DETAILS & FIXTURE SCHEDULE

SECTION 00015
PROJECT MANUAL
LIST OF DRAWINGS
LARSON MIDDLE SCHOOL

T1	11/08/06	TITLE PAGE
T2	11/08/06	DATA SHEET

ARCHITECTURAL

A0.0	11/08/06	CODE COMPLIANCE PLAN
D1.1	11/08/06	DEMOLITION PLAN – UNIT 100
D1.1a	11/08/06	DEMOLITION PLAN – UNIT 100A
D1.2	11/08/06	DEMOLITION PLAN – UNIT 200
D1.2a	11/08/06	DEMOLITION PLAN – UNIT 200A
D1.3	11/08/06	DEMOLITION PLAN – UNIT 300
D1.3a	11/08/06	DEMOLITION PLAN – UNIT 300A
A1.1	11/08/06	FLOOR PLAN – UNIT 100
A1.2	11/08/06	FLOOR PLAN – UNIT 200
A1.2a	11/08/06	FLOOR PLAN – UNIT 200A
A2.1	11/08/06	REFLECTED CEILING PLAN - UNIT 100
A2.1a	11/08/06	REFLECTED CEILING PLAN – UNIT 100A
A2.2	11/08/06	REFLECTED CEILING PLAN – UNIT 200
A2.2a	11/08/06	REFLECTED CEILING PLAN – UNIT 200A
A2.3	11/08/06	REFLECTED CEILING PLAN – UNIT 300
A2.3a	11/08/06	REFLECTED CEILING PLAN – UNIT 300A
A5.1	11/08/06	DETAILS
A6.1	11/08/06	DOOR SCHEDULE AND DETAILS

MECHANICAL

FS1.1	11/08/06	FIRE SUPPRESSION COMPOSITE PLAN
M0.1	11/08/06	HVAC DEMOLITION PLAN – UNIT 100
M0.1a	11/08/06	HVAC DEMOLITION PLAN – UNIT 100A
M0.2	11/08/06	HVAC DEMOLITION PLAN – UNIT 200
M0.2a	11/08/06	HVAC DEMOLITION PLAN – UNIT 200A
M0.3	11/08/06	HVAC DEMOLITION PLAN – UNIT 300
M0.3a	11/08/06	HVAC DEMOLITION PLAN – UNIT 300A
M2.1	11/08/06	HYDRONIC PLAN – UNIT 100
M2.1a	11/08/06	HYDRONIC PLAN – UNIT 100A
M3.1	11/08/06	HVAC PLAN – UNIT 100
M3.1a	11/08/06	HVAC PLAN – UNIT 100A
M3.2	11/08/06	HVAC PLAN – UNIT 200
M3.2a	11/08/06	HVAC PLAN – UNIT 200A
M3.3	11/08/06	HVAC PLAN – UNIT 300
M3.3a	11/08/06	HVAC PLAN – UNIT 300A
M4.1	11/08/06	MECHANICAL ENLARGEMENT PLANS
M4.2	11/08/06	MECHANICAL ENLARGEMENT PLANS
ME1.1	11/08/06	MECHANICAL/ELECTRICAL SCHEDULES

ELECTRICAL

E1.1	11/08/06	LIGHTING AND POWER PLAN – UNIT 100

E1.1a	11/08/06	LIGHTING AND POWER PLAN – UNIT 100
E1.2	11/08/06	LIGHTING AND POWER PLAN – UNIT 200
E1.2a	11/08/06	LIGHTING AND POWER PLAN – UNIT 200
E1.3	11/08/06	LIGHTING AND POWER PLAN – UNIT 300
E1.3a	11/08/06	LIGHTING AND POWER PLAN – UNIT 300
E3.1	11/08/06	ELECTRICAL DETAILS
E3.2	11/08/06	ELECTRICAL DETAILS & FIXTURE SCHEDULE

SECTION 00015
PROJECT MANUAL
LIST OF DRAWINGS
SMITH MIDDLE SCHOOL

T1	11/08/06	TITLE SHEET
T2	11/08/06	DATA SHEET
SITE		
C1.0	11/08/06	SURVEY OF EXISTING CONDITIONS
C1.1	11/08/06	SITE DEMOLITION PLAN/SITE LAYOUT PLAN
C1.2	11/08/06	SITE GRADING PLAN AND EROSION CONTROL PLAN, SITE DETAILS
ARCHITECTURAL		
A0.0	11/08/06	CODE COMPLIANCE PLAN
D1.1	11/08/06	DEMOLITION PLAN – UNIT 100
D1.2	11/08/06	DEMOLITION PLAN – UNIT 200
D1.3	11/08/06	DEMOLITION PLAN – UNIT 300
D1.4	11/08/06	DEMOLITION PLAN – UNIT 400
A1.1	11/08/06	FLOOR PLAN – UNIT 100
A1.2	11/08/06	FLOOR PLAN – UNIT 200
A1.3	11/08/06	FLOOR PLAN – UNIT 300
A1.4	11/08/06	FLOOR PLAN – UNIT 400
A1.10	11/08/06	ROOF PLAN
A1.12	11/08/06	OFFICE ADDITION PLAN – UNIT 200
A2.1	11/08/06	REFLECTED CEILING PLAN – UNIT 100
A2.2	11/08/06	REFLECTED CEILING PLAN – UNIT 200
A2.3	11/08/06	REFLECTED CEILING PLAN – UNIT 300
A2.4	11/08/06	REFLECTED CEILING PLAN – UNIT 400
A2.5	11/08/06	PARTITION SECTIONS
A3.1	11/08/06	EXTERIOR ELEVATIONS
A3.2	11/08/06	EXTERIOR ELEVATIONS
A3.3	11/08/06	EXTERIOR ELEVATIONS
A4.1	11/08/06	WALL SECTIONS
A5.1	11/08/06	BUILDING DETAILS
A5.2	11/08/06	BUILDING DETAILS
A5.3	11/08/06	BUILDING DETAILS
A6.1	11/08/06	DOOR SCHEDULE AND DOOR TYPES
A6.2	11/08/06	DOOR DETAILS
A6.3	11/08/06	DOOR DETAILS
A6.4	11/08/06	DOOR DETAILS
A8.2	11/08/06	OFFICE ADDITION COLOR LAYOUT PLAN – UNIT 200
FOOD SERVICE		
FS-1	11/08/06	FOOD SERVICE EQUIPMENT PLAN
STRUCTURAL		
S1.0	11/08/06	FOUNDATION AND ROOF FRAMING PLANS
S1.1	11/08/06	FOUNDATION DETAILS
S1.2	11/08/06	FRAMING DETAILS

MECHANICAL

P0.2	11/08/06	PLUMBING DEMOLITION PLAN – UNIT 200
P0.3	11/08/06	PLUMBING DEMOLITION PLAN – UNIT 300
P0.4	11/08/06	PLUMBING DEMOLITION PLAN – UNIT 400
P1.1	11/08/06	PLUMBING PLAN – UNIT 100
P1.2	11/08/06	PLUMBING PLAN – UNIT 200
P1.3	11/08/06	PLUMBING PLAN – UNIT 300
P1.4	11/08/06	PLUMBING PLAN – UNIT 400
M0.1	11/08/06	HVAC DEMOLITION PLAN – UNIT 100
M0.2	11/08/06	HVAC DEMOLITION PLAN – UNIT 200
M0.3	11/08/06	HVAC DEMOLITION PLAN – UNIT 300
M1.1	11/08/06	HVAC PLAN – UNIT 100
M1.2	11/08/06	HVAC PLAN – UNIT 200
M1.3	11/08/06	HVAC PLAN – UNIT 300
M2.1	11/08/06	ENLARGED BOILER ROOM DEMOLITION & FLOOR PLAN
M3.1	11/08/06	MECHANICAL DETAILS
M3.2	11/08/06	MECHANICAL DETAILS
ME1.1	11/08/06	MECHANICAL/ELECTRICAL SCHEDULES
ME1.2	11/08/06	MECHANICAL/ELECTRICAL SCHEDULES

ELECTRICAL

E1.1	11/08/06	LIGHTING PLAN – UNIT 100
E1.2	11/08/06	LIGHTING PLAN – UNIT 200
E1.3	11/08/06	LIGHTING PLAN – UNIT 300
E1.4	11/08/06	LIGHTING PLAN – UNIT 400
E2.1	11/08/06	POWER PLAN – UNIT 100
E2.2	11/08/06	POWER PLAN – UNIT 200
E2.3	11/08/06	POWER PLAN – UNIT 300
E2.4	11/08/06	POWER PLAN – UNIT 400
E3.1	11/08/06	ELECTRICAL DETAILS & LIGHTING
E3.2	11/08/06	ELECTRICAL DETAILS & FIXTURE SCHEDULES
E3.3	11/08/06	ELECTRICAL ONE-LINE DIAGRAM

END OF SECTION 00015

SECTION 00100
ADVERTISEMENT TO BID

1. Barton Malow Company, requests Bid Proposals on behalf of Troy School District for the **Phase I – Three Middle Schools Remodeling & Addition (Boulan Park, Larson & Smith)** for Bid Package No. 9361 work. Bid Proposals will be received by Troy School District, 1140 Rankin, Troy, MI 48098 delivery or mail, to the attention of Frank Lams by 3:00 p.m. local time on Tuesday, December 19, 2006. (The clock used for receiving bids is located at the Rankin office in Nancy Cryderman's area. The clock is linked to the TSD computer resource center). Proposals must be sealed with Bidder's name on the outside of the envelope and designated as follows:

   Sealed Proposal
   Phase I – Three Middle Schools Remodeling & Addition
   (Boulan Park, Larson & Smith)
   Bid Package No. 9361
   Bid Category: _____
   Contractor Name, Address, Phone Number

2. Proposals shall be based on the requirements set forth in the Project Manual by Barton Malow Company and Specifications and Construction Documents prepared by Kingscott Architects, Engineering, Interior Design dated October 11, 2006 for:

BID PACKAGE NO. 9361, Phase I – Three Middle Schools Remodeling & Addition
(Boulan Park, Larson & Smith)
2004 Bond Program

Bid Category	Titles
2.1	Sitework
3.1	Concrete
4.1	Masonry
5.1	Structural Steel
6.1	Carpentry and Acoustical Ceilings
7.1	Roofing
8.1	Glazing & Metal Wall Panels
9.1	Painting
9.2	Ceramic Tile
9.3	Carpet, Resilient Tile and Base
12.1	Telescoping Stands
12.2	Gym Equipment
15.1	Mechanical
15.2	Temperature and Lighting Controls
15.3	Mechanical Testing and Balancing
16.1	Electrical

3. Accepted Bidders will be required, as a condition precedent to award of Contract, to furnish in the amount of 100% of the contract price, satisfactory Performance Bond and Payment Bond and Certificates of Insurance as required in the Project Manual.

4. Unless otherwise specifically set forth in Section 00880 of the Project Manual, this Project is subject to state sales and/or use taxes and Bidder is required to include such taxes in its Bid Proposal.

5. Barton Malow Company has been contracted by the Owner in the capacity of **Construction Manager,** for the Project, and as such has the rights and obligations set forth in its contract with the Owner for those services, and shall act as representative of the Owner to the extent required/allowed under its Owner contract.

6. Bid Proposals will be publicly opened immediately following receipt of bids by the Troy School District and Barton Malow Company, evaluated by Barton Malow Company, Owner and the Architect, with awards subsequently made by Troy School District, Barton Malow Company and Kingscott Architects, Engineering, Interior Design.

   The Owner shall not open, consider, or accept a Bid Proposal that is received after the date and time specified for bid submission in this Advertisement for Bids.

7. Bidding Documents will be available for examination and distribution on or after Tuesday, November 20, 2006. Examination may be made at the following locations:

   - Barton Malow Company Site Office, 1301 Boyd, Troy, MI 48083
   - Construction Association of Michigan, 43636 Woodward Ave., Bloomfield, MI 48302
   - F. W. Dodge, 21415 Civic Center Drive, Suite 115, Southfield, MI 48076

8. A **STRONGLY ENCOURAGED PRE-BID CONFERENCE** and site tour will be held for all trades at Boulan Park Middle School (3570 Northfield Parkway Troy, MI 48084), on **Tuesday, November 21, 2006, at 3:30 p.m.** All Bidders should plan to attend the pre-bid conference. Pre-bid conference minutes will be distributed to all attendees by Barton Malow Company. But, Barton Malow Company, the Architect and Owner are not responsible for providing information to those who do not attend the pre-bid conference. Information disclosed in the pre-bid conference minutes will be considered part of the Bidding and Contract Documents.

9. A deposit of **$100** per document set is required. Deposit check should be made payable to the Troy School District. Each Bidder shall provide its shipper number for shipping fees if the Bidder desires to have plans sent by ground or air transportation. More than one set is available upon payment of printing and shipping costs. **Deposits will be refunded upon return of the Bidding Documents to the Barton Malow Company by January 18, 2007**, provided the Bidding Documents are returned complete, in clean and usable condition, and free of marks or other defacements. **DEPOSIT WILL NOT BE REFUNDED FOR DRAWINGS RETURNED AFTER JANUARY 18, 2007.** Successful Bidders shall retain their set of Bidding Documents and their deposits will be refunded upon execution of the Agreement.

10. Bid Proposals shall be on forms furnished by **Barton Malow Company in Section 00400**. Bidders will be required to submit with their Bid Proposals, a notarized Familial Relationship Disclosure Form furnished by **Barton Malow Company in Section 00410**, a Bid Security by a qualified surety authorized to do business in the State of Michigan where the Project is located, an OSHA Form 300 for the most recent completed year, their worker's compensation Experience Modification Rate (EMR) factor, and any other information required in the Instructions to Bidders. Bidders shall not withdraw Bid Proposals for a period of **ninety (90)** Days after date for receipt of Bid Proposals.

11. The successful Bidder(s) will be required to enter into an agreement with Troy School District on the Agreement Form identified in Section 00500 of the Project Manual.

12. The right to accept or reject any or all Bid Proposals, either in whole or in part, to waive any informalities or irregularities therein and to award the contract to other than the low bidder is reserved by Troy School District.

13. The attached maps shows the location of both the Bid Receipt/Opening as well as where bid documents will be distributed or picked up.

14. All Bid Proposals shall be accompanied by the sworn and notarized statement included in Section 00410 of the Project Manual, in accordance with MCL 380.1267, disclosing any familial relationship that exists between the owner(s) or any employee of the Bidder and any member of the School board or the superintendent of the School District. Bid Proposals that do not include this sworn and notarized disclosure statement will not be considered accepted.

BARTON MALOW COMPANY

Troy School District
Leah Bossert
Project Manager

END OF SECTION 00100

SECTION 00200
INSTRUCTION TO BIDDERS

PART 1 – DEFINITIONS

1.01 Capitalized terms used in this Project Manual shall have the meanings set forth below. If a capitalized term is used herein but not defined in this Section, 00200, Part 1, it shall have the meaning set forth in other applicable Contract Documents (such as the Agreement or Conditions of the Contract).

1.02 "**Addenda**" means the written and graphic instruments issued by the Architect and/or Barton Malow Company prior to the execution of the Agreement that modify or interpret the Bidding Documents by additions, deletions, clarifications, or corrections.

1.03 "**Agreement**" means the document defined as such in Section 00500, including all other documents incorporated by reference in the Agreement.

1.04 "**An Alternate Bid**" (or "**Alternate**") is an amount stated in the Bid Proposal to be added to or deducted from the amount of the Base Bid if the corresponding change in the Work, as described in the Bidding Documents, is accepted.

1.05 "**Architect**" means the person or entity listed in Project Manual, section 00030 as such, and may include professional engineers if so designated.

1.06 "**Base Bid**" is the sum stated in the Bid Proposal for which the Bidder offers to perform the Work described in the Bidding Documents as the base, to which Work may be added to or deducted from for sums stated in Alternate Bids.

1.07 A "**Bidder**" is a person or legal entity that submits a Bid Proposal in conformance with the Bidding Documents. After award of the Agreement, the Bidder will be referred to as **Contractor: "All Contractors on this project are considered prime/principal contractors"**.

1.08 "**Bid Categories**" are units of Work performed by a Contractor and its Subcontractors which form part of the total Project. The term "Bid Category" should not be confused with the term "**Technical Section**". Technical Sections of the Specification (Division 2 through Division 17) establish quality and performance criteria, and the Bid Categories designate work scope and assignment.

1.09 A "**Bid Category Description**" is a written description of the scope of Work to be performed by a Bidder for a Bid Category. A description of the Work is provided in the Scope of Work for each Bid Category.

1.10 "**Bidding Documents**" means the Bidding Requirements, the Contract Documents, and the Resource Drawings collectively.

1.11 A "**Bid Package**" means a series of Bid Categories that are released for bidding in the same set of Bidding Documents.

1.12 "**Bidding Requirements**" include the **ADVERTISEMENT TO BID**, Instructions to Bidders, Information Available to Bidders, and Bid forms and supplements.

1.13 "**Bid Proposal**" is a complete and properly signed proposal to do the Work of an individual Bid Category (ies) for the sums stipulated therein, submitted in accordance with the Bidding Documents.

1.14 The "**Contract Documents**" consist of all Contracting Requirements set forth in Division 0 of this Project Manual, including, but not limited to, the Contract Forms (the Agreement, Performance/Payment Bonds, and Certificates), the Conditions of the Contract (General, Supplementary or Special), the Division 1-General Requirements of this Project Manual, the Specifications set forth in Division 2 through 17 of this

Project Manual, the Drawings, and all other documents incorporated into the Agreement by reference, all Addenda issued prior to and all modifications issued after execution of the Agreement.

1.15 "**Day**" means calendar day, unless otherwise defined in the particular Contract Document.

1.16 "**Hazard Communications Program**" means the **Contractor** own hazard communications program that will govern project safety for such **Contractor** Work and that must be submitted to Barton Malow Company by each successful Bidder before commencing Work. The Hazard Communications Program will be no less stringent than Section 00810 - On Site Safety and Loss Control Program included in the Bidding Documents. Each **Contractor** shall be fully responsible for the safety of its Work and the Work of its Subordinate Parties.

1.17 "**Hazardous Materials**" means asbestos; asbestos containing material; lead (including lead-based paint); PCB; molds; any other chemical, material, or substance subject to regulation as a hazardous material, hazardous substance, toxic substance, or otherwise, under applicable federal, state, or local law; and any other chemical, material, or substance that may have adverse effects on human health or the environment.

1.18 "**Lowest Responsive, Responsible Bidder**" means a Bidder whose Bid Proposal conforms in all material aspects to the terms, conditions, specifications and requirements of the solicitations and who has demonstrated the ability to properly perform the Work.

1.19 "**MBE/WBE/SBE**" means Minority Owned Business Enterprise/Women Owned Business Enterprise/ Small Business Enterprise as these terms are defined in the applicable ordinances and laws governing the Project. Refer to Project Manual, Section 00861 for more specific requirements.

1.20 "**Project Safety Program**" means the **Contractor** own site safety program that will govern project safety for such **Contractor** Work, and that must be submitted to Barton Malow Company by each successful Bidder before commencing Work. The Project Safety Program will be no less stringent than Section 00810 - On Site Safety and Loss Control Program included in the Bidding Documents. Each **Contractor** shall be fully responsible for the safety of its Work and the Work of its Subordinate Parties.

1.21 "**Resource Drawings**" are drawings that do not form a part of the Contract Documents and are included in the Bidding Documents as a courtesy only. The Bidder is not entitled to rely upon the accuracy of the Resource Drawings and they are not warranted to be correct or reliable by the Owner or Barton Malow Company. The Bidder is expected to have conducted its own investigation into the reliability or accuracy of any Resource Drawings, and no adjustment to the Base Bid shall be made if such request arises or results from the Bidder's failure to conduct such investigation.

1.22 "**Subordinate Parties**" means all of **Contractor** employees, workers, laborers, agents, consultants, suppliers or subcontractors, at any tier, who perform, assist with, or otherwise are involved in any of the Work.

1.23 A "**Unit Price**" is an amount stated in the Bid Proposal as a price per unit of measurement for materials or services as described in the Bidding Documents or in the proposed Contract Documents.

PART 2 - BIDDERS REPRESENTATIONS

2.01 QUALIFICATION OF BIDDER

A. The **Owner** reserves the right to request qualification forms or additional information from and Bidder before issuing documents, receiving Bid Proposals or awarding an Agreement. The **Owner** may, at their sole discretion, accept or reject Bidders as qualified. The right to waive any informalities or irregularities in qualification materials is reserved by the **Owner**.

2.02 BIDDER BY MAKING ITS BID REPRESENTS THAT:

A. Bidder has carefully read, reviewed and understands the Bidding Documents and its Bid Proposal is made in accordance therewith.

B. Bidder's Bid Proposal is based upon the materials, systems and equipment required by the Bidding Documents without exception.

C. Bidder certifies that it has examined the Project site, has carefully reviewed the Bidding and Contract Documents, has compared its examination of the Project site with the Bidding and Contract Documents, including the Drawings and Specifications, and is satisfied as to the condition of the Project site, any surface or subsurface obstruction, the actual levels, and all excavating, filling in, removal and demolition, measurements and quantities involved in the Work, and is familiar with weather conditions of the Project area, and has taken account of all of these factors in preparing and presenting its Bid Proposal. Bidder further certifies that it has fully acquainted itself with the character and extent of the Owner's, Barton Malow Company's and other contractor's operations in the area of the Work, and it has taken account of coordination of operations of others in its construction plans set forth in the Bid Proposal. No change orders will be issued to the **Contractor** for or on account of costs or expenses occasioned by its failure to comply with the provisions of this paragraph, or by reason of error or oversight on the part of the **Contractor**, or on account of interferences by the Owner's Barton Malow Company's or other contractor's activities.

D. The Bidder, by submitting its Bid Proposal, represents that it has carefully reviewed the project schedule, along with the related requirements of Section 00230 - Schedule and Phasing, and acknowledges that these are acceptable and have been taken into account in preparing its Bid Proposal.

PART 3 - BIDDING DOCUMENTS

3.01 COPIES

A. Bidders may obtain Bidding Documents pursuant to the requirements in the **Advertisement to Bid**.

B. Bidders shall use complete sets of Bidding Documents in preparing Bid Proposals. Neither the Owner, Barton Malow Company nor the Architect shall be responsible for errors, omissions or misinterpretations resulting from the Bidder's use of partial sets of Bidding Documents.

C. Copies of the Bidding Documents are being made available on the above terms for the purposes of obtaining Bid Proposals for the Work only. Bidders shall not use the Bidding Documents for any other purpose. Neither the Owner, Barton Malow Company nor the Architect warrants the completeness and/or adequacy of the Bidding Documents.

D. The Architect will provide, for a fee, electronic data files, and compatible with AutoCAD 2000, for contractors convenience and use in the preparation of shop drawings. Requests for electronic data and fee quote shall be in written form through the architect. Prior to the release of electronic files, the Architect will require a signed waiver of release and payment of the fee. See section **01330-5.03E** for fee.

E. The Contractors shall be responsible to review Bid Documents before start of construction, and bring any items that could be considered errors or omissions to the attention of the Construction Manager and Architect. Any error or omission items discovered after start of construction shall be the responsibility of the Contractor if determined to be reasonable by the Architect and Construction Manager.

3.02 INTERPRETATION OR CORRECTION OF BIDDING DOCUMENTS

A. Bidder shall promptly notify the Architect through Barton Malow Company of all ambiguities, inconsistencies, or errors that it may discover upon examination of the Bidding Documents or upon examination of the Project site and local conditions. Bidders requesting clarification or interpretation of the Bidding Documents shall make a written request, which shall reach Barton Malow Company at least five **(5)** days prior to the date for receipt of Bid Proposals. Direct all questions to:

Barton Malow Company
Attn: Leah Bossert, Project Manager
1301 Boyd
Troy, MI 48083
PH: 248-823-4631
FAX: 248-823-4672

B. Any interpretation, correction, or change of the Bidding Documents will be made by Addendum. Interpretations, corrections, or changes of the Bidding Documents made in any other manner will not be binding, and Bidders shall not rely upon such interpretations, corrections and changes. Addenda will be mailed, faxed or delivered to all who are known to have received Bidding Documents.

C. For the dissemination of information, clarification of the intent of the Bidding Documents, and a site visit/tour, a Pre-bid Conference will be held as stated in the **Advertisement to Bid.**

3.03 SUBSTITUTIONS

A. See Section 01630 Product Substitutions in the Project Manual for substitution submittal requirements. Submit all substitution request forms to Barton Malow Company who will transmit them to the Architect.

3.04 ADDENDA

A. Addenda will be mailed, faxed or delivered to all who are known by Barton Malow Company to have a complete set of Bidding Documents. Copies of Addenda will be made available for inspection wherever Bidding Documents are on file for that purpose.

B. No Addenda will be issued later than **three (3)** days prior to the date for receipt of Bids except an Addendum withdrawing the request for Bid Proposals or one, which includes postponement of the date for receipt of Bid Proposals.

C. Each Bidder shall ascertain prior to submitting its Bid Proposal that it has received all Addenda issued, and it shall acknowledge its receipt in the proper location on the Bid Proposal.

3.05 ALTERNATES

A. Each Bidder must bid on all Alternates listed in the Bid Proposal that are applicable to its Bid Category. Alternates will be fully considered in awarding the Agreement.

B. **Troy School District** shall be allowed a period of **sixty (60)** Days after date of receipt of the Bid Proposals to exercise the right to accept or reject any or all Alternates submitted on the Bid Proposal.

C. Successful Bidders shall perform all Work required for complete execution of accepted Alternates, and the Bid Proposal shall include all overhead and profit for the Work required.

3.06 VOLUNTARY ALTERNATES

A. All Bid Proposals must be based upon the Contract Documents. In addition to a Base Bid Proposal, the submission of voluntary Alternates is acceptable and encouraged. If a voluntary Alternate is submitted for consideration, it shall be expressed on the bid form as an add or deduct amount from the Base Bid. If a voluntary Alternate is submitted, the Bidder shall also submit sufficient information in the form of drawings, specifications, test data, delivery dates, scheduling issue considerations, and all other information necessary and sufficient for analysis of the Alternate. The **Owner** reserve the right to unilaterally accept or reject voluntary Alternates and to determine if the voluntary Alternates will be considered in the awarding of the Agreement.

3.07 UNIT PRICES

A. Each Bidder must bid on all unit prices listed in the Bid Proposal that are applicable to its Bid Category. Unit Prices will be fully considered in awarding the Agreement.

B. Successful Bidders shall perform all Work required for complete execution of accepted Unit Prices, and such Unit Prices shall include all overhead and profit for the Work required.

3.08 SALES TAX

A. Unless specifically stated otherwise in Section 00880 of the Project Manual, this Project is subject to state Sales Tax and/or Use Tax and the Bidder's Bid Proposal shall include all applicable sales and use tax.

3.09 NO DISCRIMINATION

A. All Bidders shall ensure that employees and applicants for employment are not discriminated against because of their race, color, religion, sex, national origin, age, marital status, sexual orientation, or disability and in conformance with local, state and federal laws, regulations and ordinances.

B. In regard to any Agreement entered into pursuant to this Bid Package, minority and women owned business enterprises will be afforded full opportunity to submit Bid Proposals in response to the **Advertisement to Bid** and will not be discriminated against on the grounds of race, color, religion, sex, national origin, age, marital status, sexual orientation, disability or any other status protected by applicable law.

3.10 PHASES OF CONSTRUCTION

A. The Bidder, if awarded the Agreement, agrees to proceed under the method known as phased construction whereby construction commences prior to completion of all working drawings for subsequent Work.

B. The Project has been and may be bid in the following phases:

BID PACKAGES	**ESTIMATED DUE DATE**
Phase I – Three Middle School Remodeling & Addition (Boulan Park, Larson & Smith)	**December 19, 2006**

C. Bidder shall acquaint itself with the nature and content of the other Bid Packages of this Project. Bidder shall be familiar with the current phase(s) of construction and the extent of how this and the other Bid Packages affect its Work.

3.11 OTHER BID CONSIDERATIONS

A. PREVAILING WAGES – The successful Bidder and its Subordinate Parties shall comply with the Prevailing Wage requirements described in Section 00870 Labor Relations in the Project Manual.

PART 4 - BIDDING PROCEDURE

4.01 FORM AND STYLE OF BIDS

A. Bid Proposals shall be submitted in triplicate on the Bid Proposal Form included in Section 00400 with the Bidding Documents.

B. All blanks on the Bid Proposal Form shall be filled in by typewriter or manually in ink.

C. Where so indicated by the makeup of the Bid Proposal Form, sums shall be expressed in both words and figures, and in case of discrepancy between the two, the amount written in words shall govern.

D. All interlinear marks, alterations or erasures shall be initialed by the signer of the Bid Proposal.

E. All requested Alternates and/or Unit Prices shall be bid. A dollar amount of each Alternate and/or Unit Price in both words and numerals, even if the amount is $0.00, shall be included. Terminology such as "No Bid", "Not Applicable", "No Change" or "Does Not Apply" shall not be used. If the Alternate and/or Unit Price do not apply to the Bidder, an amount of $0.00 shall be included.

F. Each copy of the Bid Proposal shall include the legal name of the Bidder and a statement that the Bidder is a sole proprietor, a partnership, a corporation, or some other legal entity. Each copy shall be signed by the person or persons legally authorized to bind the Bidder to a contract of the size and scope of the Agreement. A Bid Proposal by a corporation or LLC shall further indicate the state of incorporation or registration. A Bid Proposal submitted by an agent shall have a current power of attorney attached certifying the agent's authority to bind the Bidder.

G. The Work of an individual Bid Category described in these documents is the sole responsibility of the successful Bidder for that Bid Category. Bids will only be accepted on the full scope of Work outlined by this Bid Package/Bid Category. The Work of each Bid Category is described in Section 00220 Work Scopes.

H. Each Bid Proposal received shall be in strict conformity with the requirements of the Bidding Documents, including, but not limited to, the Description of the Work/Special Provisions, Work Scopes and Scheduling information.

4.02 BID SECURITY

A. Bid security in the form of a bid bond issued by a qualified surety, certified check or cashier's check in the amount of five percent (5%) of the Base Bid amount will be required at the time of submission of the Bid Proposal. Bid bonds shall be duly executed by the Bidder, as principal and by a surety that is properly licensed and authorized to do business in the state in which the Work is to be performed. All sureties providing bonds for this Project must be listed in the latest version of the Department of Treasury's Circular 570, entitled "Companies Holding Certificates of Authority as Acceptable Sureties on Federal Bonds and as Acceptable Reinsuring Companies", with the bond amount less than or equal to the underwriting limitation, and/or have an A.M. best rating of A- or better.

B. Bid bond shall pledge that the Bidder, with the understanding that if its Bid Proposal is accepted, will enter into the Agreement with **Troy School District** for any of the Bid Category (ies) accepted from its Bid Proposal and will, if required, furnish performance and payment bonds covering the faithful performance of the Agreement and the payment of all obligations arising there under. The attorney-in-

fact, who signs the surety bond, must submit along with the bond, a certified and effectively dated copy of his/her power of attorney.

C. Bid bond form AIA Document A310 is approved for use on this Project.

D. The bid security obligees shall be **Troy School District** and the amount of the bid security shall become **their** property in the event that the Bidder fails, within **Ninety (90)** days of notice of award or receipt of the Agreement form, to execute the Agreement, and deliver the performance and payment bonds as described in the Project Manual, section 00610. In such case, the bid security shall be forfeited to **Troy School District** as liquidated damages, not as a penalty

E. The Owner will have the right to retain the bid security(ies) of Bidders to whom an award is being considered until either (a) the Agreement has been executed and bonds, if required, have been furnished, or (b) the specified time has elapsed so that Bid Proposals may be withdrawn, or (c) all Bid Proposals have been rejected.

F. Bid security will be returned to the successful Bidders after the Agreement has been executed, and acceptance of required performance and payment bonds. The bid security of Bidders that are not under consideration for award of the Agreement will be returned to those Bidders.

4.03 SUBMISSION OF BIDS

A. All copies of the Bid Proposal, the bid security and any other documents required to be submitted with the Bid Proposal shall be enclosed in a sealed opaque envelope. The envelope shall be addressed to the party receiving the Bids and shall be identified with the Project name, the Bidder's name and address, if applicable, the designated portion of the Work for which the Bid Proposal is submitted. If the Bid Proposal is sent by mail, the sealed envelope shall be enclosed in a separate mailing envelope with the notation "SEALED BID ENCLOSED" on the face of the envelope.

B. Bid Proposals shall be deposited at the designated location prior to the time and date for receipt of Bid Proposals indicated in the **Advertisement to Bid**, or any extension thereof made by Addendum. Bid Proposals received after the date and time for receipt of bids will be returned unopened.

C. The Bidder shall assume full responsibility for timely delivery at the location designated for receipt of Bid Proposals.

D. Oral, telephonic, facsimile, e-mailed or telegraphic Bid Proposals or bid securities are invalid and will not receive consideration.

E. Bid Proposals will only be accepted for individual Bid Categories. Bidders are required to bid an entire Bid Category. Bidders may bid more than one Bid Category. Combined bids covering several Bid Categories may not be accepted unless separate bid amounts are listed for each Bid Category making up the combined bid amount. The amount for a combined bid, however, need not be equal in amount to the total of the individual category bids.

4.04 MODIFICATION OR WITHDRAWAL OF BID PROPOSAL

A. A Bid Proposal may not be modified, withdrawn or canceled by the Bidder after the stipulated time period and date designated for the receipt of Bid Proposals, and each Bidder so agrees in submitting its Bid.

B. Prior to the time and date designated for receipt of Bid Proposals, any Bid Proposal submitted may be modified or withdrawn by notice to the party receiving Bid Proposals at the place designated for their receipt. Such notice shall be in writing over the signature of the Bidder.

C. Withdrawn Bid Proposals may be resubmitted up to the time designated for the receipt of bids provided that they are then fully in conformance with these Instructions to Bidders.

D. Bid security under B. or C., above shall be in an amount for the Base Bid as modified or resubmitted.

PART 5 - CONSIDERATION OF BIDS

5.01 OPENING OF BIDS

A. Bid Proposals received on time will be open **publicly**.

B. Bid Proposals shall be held open and irrevocable for **Forty-five (45)** Days after the date for receipt of bids.

5.02 REJECTION OF BIDS

A. **Troy School District** shall have the right to reject any or all Bid Proposals and to reject a Bid Proposal not accompanied by the required bid security or by other information required by the Bidding Documents, or to reject a Bid Proposal which is in any way incomplete or irregular.

B. Bids Proposals are considered irregular and may be rejected for any of the following reasons unless otherwise provided by law:

1. If Bid Proposal Form furnished is not used or is altered.

2. If there are unauthorized additions, qualified or conditional Bid Proposals, or irregularities of any kind which may make the Bid Proposal incomplete, indefinite, or ambiguous as to its meaning.

3. If Bidder adds any provisions reserving right to accept or reject any award, or enter into the Agreement pursuant to an award.

4. If Unit or Lump Sum prices or Alternates contained in the Bid Proposal are obviously unbalanced either in excess of, or below, reasonable cost analysis values.

5. If Bidder fails to complete the Bid Proposal Form where information is requested so the Bid Proposal form cannot be properly evaluated.

6. Bidder is deemed to not be the Lowest Responsive, Responsible Bidder by definition and prevailing statutes.

7. Bidder does not submit with its Bid Proposal a sworn an notarized statement of Familial Disclosure.

5.03 ACCEPTANCE OF BID (AWARD)

A. It is the intent of the **Troy School District** to award the Agreement to the Lowest Responsive and Responsible Bidder provided the Bid Proposal has been submitted in accordance with the requirements of the Bidding Documents and does not exceed the funds available. **Troy School District** shall have the right to waive any informality or irregularity in any Bid Proposal received and to accept Bid Proposals which, in its judgment, are in its own best interest which includes not awarding to the low bidder. **Troy School District** reserves the right to reject any Bid Proposal in **its** sole discretion except where otherwise provided by law.

B. **Troy School District** shall have the right to accept Alternates in any order or combination and to determine the low Bidder on the basis of the sum of the Base Bid, Voluntary Alternates, and Alternates accepted.

C. **Troy School District** shall have the right to accept combination bids from a Bidder for more than one Bid Category.

5.04 To the extent that these Instructions to Bidders and applicable public bidding laws, rules, regulations or ordinances conflict with each other, the provisions of the applicable bidding laws, rules, regulations or ordinances shall govern.

PART 6 - POST BID INFORMATION

6.01 POST BID INFORMATION

A. After the Bids are received, tabulated, and evaluated, the apparent low Bidders **when so requested by the owner and/or Barton Malow Company shall** meet with the Barton Malow Company at a post-bid meeting for the purposes of determining completeness of scope and any contract overlaps or omissions. If requested, the Bidder shall submit additional qualification forms or other information as required in the Instructions to Bidders. The Bidder will provide the following information at the post-bid meeting:

1. Designation of the Work to be performed by the Bidder with its own forces including manpower for the **Contractor** and that of its Subordinate Parties.

2. Detailed cost breakdown of the Bidder's Bid Proposal including labor, equipment and material unit prices.

3. A list of names of the Subordinate Parties proposed for the principal portions of the Work.

4. The proprietary names and suppliers of principal items or systems of materials and equipment proposed for the Work.

5. The names and backgrounds of the Bidder's key staff members including superintendent and assistants. Bidder shall be requested to establish the reliability and responsibility of the persons or entities proposed to furnish and perform the Work described in the Bidding Documents.

6. Commitment to construction schedules, identification of items requiring long lead deliveries and manpower information in accordance with Section 00230 of the Project Manual.

B. Prior to award of the Agreement, Barton Malow Company will notify the Bidder if either the Owner, the Architect, or Barton Malow Company, after due investigation, has reasonable objection to any proposed Subordinate Party. If the Owner, Architect or Barton Malow Company has reasonable objection to any proposed Subordinate Party, the Bidder may, at its option: (1) withdraw its Bid Proposal; or (2) submit an acceptable substitute Subordinate Party with an adjustment in its bid amount to cover the difference in cost occasioned by such substitution. The **Troy School District** may, at its discretion, accept the adjusted bid amount or it may disqualify the Bidder. In the event of either withdrawal or disqualification under this Subparagraph, bid security will not be forfeited, notwithstanding the provision of Part 4, paragraph 4.04., A in the Instructions to Bidders.

C. Upon the Award of the Agreement, the **Contractor** shall submit to Barton Malow Company a complete list of all items, products, and layouts for which shop drawings, brochures, or samples are required; name of each Subordinate Party; and date of planned submission. Refer to Section 01330 Submittals of the Project Manual for additional information.

D. The Bidder will be required to establish to the satisfaction of the Barton Malow Company, Owner and Architect, the reliability and responsibility of the Subordinate Parties proposed to furnish and perform the Work described in the Bidding Documents.

E. Prior to execution of the Agreement, the Bidder shall furnish separate Performance and Payment Bonds, if required, covering the faithful performance of the **Contractor** and the payment of all obligations arising there under equal to 100 per cent of the total amount payable by the terms of the Agreement. If the Work is to be commenced prior thereto in response to a letter of intent, the Bidder shall, prior to commencement of the Work submit evidence satisfactory to the Owner and Barton Malow Company that such bonds will be furnished. Refer to Section 00610 of the Project Manual for further information.

F. Before commencement of any Work, a Certificate of Insurance executed by Bidder's insurance agent or carrier showing evidence of required insurance coverages shall be submitted in accordance with the Insurance Requirements set forth in Section 00620 of the Project Manual.

G. The Agreement Form to be used for this project is described in Section 00500 of the Project Manual.

END OF SECTION 00200

SECTION 00210
DESCRIPTION OF THE WORK/SPECIAL PROVISIONS

PART 1 - GENERAL

1.01 RELATED DOCUMENTS

A. Attention is directed to, Bidding and Contract Requirements, and to Division 1, General Requirements, which are hereby made a part of this Section.

B. All Bidders are responsible to review all other Bid Category Work descriptions and immediately advise the Barton Malow Company of any adverse factors, conflicts or ambiguities that might affect the execution of Work of this Bid Package. Each Bidder is responsible to review all Bid Category descriptions and Contract Documents and coordinate the Work accordingly. Each Bidder shall incorporate into its Bid Proposal the cost of coordination of the Work with the requirements of all related Contract Documents, as shown, specified, or required.

C. Each Bidder shall thoroughly examine all of the Bidding Documents for the Work of all trades so as to familiarize itself both with the Work required under its Bid Category (ies) and with Work required under all other Bid Categories.

D. The Bidding Documents shall be construed so as to require the Bidder to perform all Work reasonably inferable therefrom as being necessary to produce the intended results. Bidders are required to visit and examine the Project site and may arrange the visit through Barton Malow Company.

1.02 PROJECT DESCRIPTION

A. The Project is Troy School District, Phase I – Three Middle Schools Remodeling & Addition (Boulan Park, Larson & Smith). The remodeling work (approx. 110,250 total building sq. ft. at each school) at all three middle schools consists of extensive duct re-work and replacement, grid ceiling re-work and replacement, as well as various classroom renovations and other system components throughout. Both Boulan Park and Smith Middle Schools have site work, including demolition, new asphalt drives, curb, gutter, sidewalks and minimal landscaping. The two (2) Smith Middle School additions consist of a 1,761 sq. ft. office addition and a 990 sq. ft. computer lab addition.

B. Remodel work at Boulan Park and Larson will happen over the summers of 2007 and 2008 – ½ of each building, each summer. The Smith additions will begin in spring of 2007 and continue through the summer, to finish in December of 2007. Smith remodel will happen in the summer of 2007 and continue through February 2008. Sitework at Boulan Park and Smith will happen in the summer of 2007, but restoration around the Smith additions will complete in June 2008.

C. Note: ALL three (3) middle schools have simultaneous schedules. Contractors will be responsible for completing ALL 3 middle schools by the completion dates listed above and stated in the construction schedule behind the Section 00230.

D. A Pre-Bid Conference for this project will be held on Tuesday, November 21st, 2006 at 3:30PM at the Boulan Park Middle School (located at 3570 Northfield Parkway, Troy, MI 48084). The opportunity will be available after the meeting to visit Smith Middle School as well.

1.03 SUMMARY OF THE BID CATEGORIES/WORK SCOPES

A. The following is a listing of Bid Categories for **Bid Package No.9361, Phase I – Three Middle Schools Remodeling & Addition** for **Troy School District.** All work relative to the Bid Package is identified on plans and specifications as prepared by the Architect. Each Bid Category description identifies the Scope of Work to be performed by the Bidder as designated by Barton Malow Company.

BID CATEGORY CODE	TITLE
2.1	Site Construction
3.1	Concrete
4.1	Masonry
5.1	Structural Steel
6.1	Carpentry and Acoustical Ceilings
7.1	Roofing
8.1	Glazing & Metal Wall Panels
9.1	Painting
9.2	Terrazzo and Ceramic Tile
9.3	Carpet, Resilient Tile and Base
12.1	Telescoping Stands
12.2	Gym Equipment
15.1	Mechanical
15.2	Temperature and Lighting Controls
15.3	Mechanical Testing and Balancing
16.1	Electrical

B. Specific Bid Category/Work Scope descriptions are found in Section 00220.

1.04 SPECIAL PROVISIONS

A. The following special provisions form a part of each Bid Category Work Scope and apply to each Contractor's Scope of Work found in Section 00220.

B. The Bid Category/Work Scopes should in no way be construed as being all inclusive. The Work Scope is issued as a guide to aid in the assignment of Work. If conflict regarding assignment of Work exists between the drawing notes and these descriptions, the Description of the Work and Bid Category/Work Scopes will take precedence. Notwithstanding the foregoing, the **Contractor** shall carefully review and compare the Drawings and Specifications with the Work Scopes, and if a conflict exists, the **Contractor** shall immediately notify Barton Malow Company in writing. The Bid Category numbers and the specification section numbers are not, in all cases, identical.

C. Each Bidder is to carefully examine the schedule enclosed in the Bidding Documents. Each Bidder shall be prepared to review at the post-bid meetings a schedule for the engineering, fabrication, delivery and installation of its Work. This information will be considered in the award recommendation.

D. All **Contractors** are to coordinate all Work with the work of other trades for proper function and sequence (see Section 01360). **Contractor** must furnish approved copies of shop drawings, mock-ups, and technical data to other contractors designated by the Barton Malow Company for the purposes of coordination of this Work. **Contractor** must provide to all other trades all information (drawings, diagrams, templates, embedments) and other related Work necessary for the proper coordination of the Work of all trades. Each phase of the Work shall be coordinated, and the coordination plan approved by Barton Malow Company prior to proceeding. **Contractor** shall keep informed as to Work of all trades engaged in the Project, and shall execute Work in such a manner as not to delay or interfere with the progress of other trades involved. **Contractor** is required to schedule its Work so that no other party is delayed in execution of its work. **Contractor** is required to employ competent supervision on the Project throughout the entire period of construction to ensure proper coordination.

E. **Contractor** will furnish before any Work is started, evidence of ISO Certification or documented procedures for process control, including drawings, submittals, inspection/surveillance and training. In lieu of defined procedures, **Contractor** will follow Barton Malow Company's documented procedures for process control.

F. When it is necessary to modify or tie into existing utility services, **Contractor** shall notify Barton Malow Company in writing a minimum of 48 hours prior to the planned disruption. All disruptions shall be scheduled with Barton Malow Company and shall be kept to a minimum time. Tie-ins and shutdowns of existing utilities may have to be performed during off hours. **Contractors** are to include any required premium time in the Base Bid.

G. If Owner will occupy the premises or a portion of the premises during the construction, **Contractor** shall cooperate with Barton Malow Company and Owner in all construction operations to minimize conflict, and to facilitate Owner occupancy.

H. Information pertaining to the existing building has been obtained through photographs and investigations and is indicated on the Resource Drawings. This information is not warranted to be complete or accurate. **Contractor** shall verify all dimensions in the field prior to ordering materials or construction and any costs or expenses arising out of its failure to do so shall be borne solely by **Contractor**.

I. The **Contractor** shall examine the existing site conditions and carefully compare them to the Drawings. All measurements must be verified from actual observation at the Project site. The **Contractor** is responsible for all Work fitting in place in approved, satisfactory and workmanlike manner in every particular. If the **Contractor** encounters unexpected existing site or building conditions, it shall cease operations immediately to minimize damage and shall immediately notify Barton Malow Company in writing. **Contractor** shall bear all costs, expenses or damages arising or resulting from its failure to comply with this paragraph.

J. Hoisting of material or equipment above occupied areas will NOT be permitted unless the existing structure has been properly verified by a licensed professional Engineer to be able to bear the load of the material or equipment being hoisted if accidentally released. It is the responsibility of the **Contractor** performing such hoisting to properly and adequately reinforce existing structures.

K. Space for electrical and mechanical lines is limited for the Project. Therefore, it is imperative that **Contractor** coordinate its Work with the Work of all other trades to ensure containment of electrical and mechanical lines in space provided. Priority of space will be decided in discretion of Barton Malow Company, with no additional compensation, where unresolved conflict exists. If Work is not properly coordinated, **Contractor** shall remove and relocate Work without additional compensation.

1.05 REQUIREMENTS

A. All start-up administrative documents shall be submitted within (10) working days of award. Also, submit material and shop drawing register and delivery schedules for pre-approval.

B. Coordinate purchase, color selection, approvals, delivery and installation of new work to maintain project schedule. Include all pre-purchase and storage costs associated with securing materials. Include cost of at lease one (1) months storage in advance of installation.

C. Coordination with other trades, including mandatory participation in job meetings.

D. Verify all dimensions and conditions of openings for compliance with the design intent prior to submittal of related shop drawings for fabrication of materials. For long lead items, in lieu of completed openings of as-built measurements, secure and sign-off on "Hold-Dimensions" through Barton Malow with the appropriate trade contractor(s).

E. It is the responsibility of this Bid Category to review ALL drawing notes including civil, code plans, architectural, structural, food service, mechanical and electrical drawings as well as the specifications for areas requiring work described by this Bid Category and include same in bid.

F. This contractor shall be responsible for receiving, off loading, hoisting into/onto building including the safe and secure storage of materials related to this work.

G. Furnish and install temporary partitions for dust control measures as required for work of this category. Use wet cutting methods and dust collection, engineered controls in order to eliminate silica exposure. Comply with all MIOSHA requirements. Use only electric and pneumatic equipment. Contractor shall not exceed permissible levels of exhaust from power equipment as established by MIOSHA requirements. (Gas operated equipment shall be prohibited within the building after enclosure).

H. Provide daily clean up, according to Barton Malow Company standards, including daily removal of all materials and identifiable debris related to this category. If daily clean up is not performed, the Construction Manager will provide labor to complete the clean up and the appropriate contractor will be back-charged.

I. Contractors shall be responsible for safe disposal of any Hazardous Materials as a result of their own work.

J. Provide joint sealers where shown and as required by work of this category. Contractor is responsible for all joint prep, backers, primers, caulking and sealants where installed material is adjoining a dissimilar material.

K. Provide all cold weather protection as described in section 01520 Temporary Construction Facilities and Controls section of the Project Manual.

L. All penetrations through walls, floors, and ceilings shall be fire and smoke stopped using materials and rated assemblies as required to comply with the State Fire Marshall Requirements as identified on the code plan for building separations.

M. Protection of new construction shall be part of this bid. Cover and protect adjacent items when installing work of this category in order to prevent any damage. If any adjacent surfaces are damaged it will be the sole responsibility of the contractor at fault to completely repair and replace all damaged construction to the satisfaction of the Owner, Construction Manager, and Architect.

N. Remove packaging labels and final clean all surfaces of items installed by this category. Verify acceptance and secure sign-off with Construction Manager prior to leaving the site.

O. This contractor shall furnish, upon completion of work, as-built reproducible drawings showing the installation of the work as completed and three sets of operating and maintenance manuals as described in the specifications.

P. Deliver maintenance stock to Owner's Maintenance Facility, as required. Check with Barton Malow Company prior to delivery. Provide a signed transmittal of these items by Owner for a close out file.

Q. Reference section 01330-2.01-F of the project manual for additional fees which may be incurred regarding submittals.

R. Any and all time tickets are to be signed by Barton Malow and submitted on a daily basis. No time tickets will be accepted unendorsed. Allowance, when billed, shall be exclusive of mark-ups and fees. Any money not used at the end of the project will be deduced from the contract.

END OF SECTION 00210

WORK SCOPE ASSIGNMENT	GENERAL ARCHITECTURAL DEMO NOTES:	
ALL	1.	THE DEMOLITION PLANS GENERALLY INDICATE AREAS OF EXTENSIVE REMOVALS AND DO NOT INDICATE ALL OF THE WORK. THE CONTRACTOR SHALL PERFORM ALL THE DEMOLITION WHICH IS NECESSARY FOR THE PROPER EXECUTION OF THE PROJECT, WHETHER OR NOT SAID DEMOLITION IS SPECIFICALLY INDICATED WITHIN THE DOCUMENTS.
4.1, 6.1, 9.3	2.	CONTRACTOR IS RESPONSIBLE TO INFILL, PATCH AND/OR REPAIR EXISTING WALLS, FLOORS AND CEILINGS TO MATCH EXISTING WHERE DEMOLITION OCCURS OTHER THAN AS DESCRIBED IN THESE DOCUMENTS.
4.1	3.	IT IS THE INTENTION OF THESE DOCUMENTS THAT THE DEMOLITION OF PORTIONS OF MASONRY WALLS (BOTH INTERIOR AND EXTERIOR) ARE GENERALLY TO BE DONE ALONG JOINT AND COURSING LINES.
ALL	4.	PATCH AND REPAIR REMAINING ADJACENT SURFACES AT AREAS OF REMOVAL AND/OR ALTERATION TO MATCH EXISTING. PROVIDE A SOUND AND PROPER SUBSTRATE FOR NEW FINISH. COORDINATE WITH ROOM FINISH SCHEDULE. WHERE A NEW FINISH IS NOT INDICATED, MATCH EXISTING ADJACENT FINISHES.
4.1, 6.1, 8.1	5.	COORDINATE DEMOLITION WORK FOR DOOR AND FRAMES W/ DOOR SCHEDULE
4.1, 6.1, 9.1, 9.3	6.	CLEAN AND PREPARE ALL EXISTING SURFACES WHICH ARE TO BE PAINTED/ PATCHED. PREPARATION TO INCLUDE MINOR PATCHING.
6.1, 8.1	7.	VERIFY WITH OWNER AS TO WHAT DEMO'D HARDWARE IS TO BE RETURNED TO OWNER. PROPERLY DISPOSE OF ALL REMAINING HARDWARE.
15.1, 16.1	8.	COORDINATE WITH MECHANICAL AND ELECTRICAL DRAWINGS FOR FURTHER DEMOLITION NOTES.
7.1, 8.1 (999. panel & demo)	9.	FOR ROOF DEMOLITION NOTES & ADDITIONAL AGGREGATE PANEL REPLACEMENT LOCATIONS SEE ROOF PLAN.
2.1	10.	SEE SITE PLAN FOR DEMOLITION OF SIDEWALKS, STOOPS AND OTHER SITE RELATED MATERIAL
15.1, 16.1 (demo & replace for contract work)	11.	SAW CUT EXISTING CONCRETE SLAB FOR NEW MECHANICAL &/OR ELECTRICAL INSTALLATION. COORDINATE WITH MECHANICAL AND ELECTRICAL DRAWINGS AND TRADES. PATCH FLOOR SLAB TO MATCH EXISTING CONC. SLAB. PREPARE FOR NEW FLOOR FINISH. COORDINATE WITH COLOR LAYOUT PLANS FOR NEW FLOOR FINISH.
ALL	12.	SEE WALL SECTIONS AND DETAILS FOR ADDITIONAL DEMOLITION INFORMATION
15.1, 16.1	13.	REMOVE AND REINSTALL GRID AND TILE FOR MISCELLANEOUS ELECTRICAL AND MECHANICAL WORK.
15.1, 16.1	14.	CONTACT IDS EMIDIATELE IF EXISTING TECHNOLOGY WIRING CONFLICTS W/ DEMO WOF

WORK SCOPE ASSIGNMENT	ARCHITECTURAL DEMOLITION NOTES :
4.1, 9.3	(1) REMOVE EXISTING MASONRY WALL CONSTRUCTION AND ANY RELATED BRACING/SUPPORTS. PATCH AND REPAIR REMAINING FLOOR AND/OR WALL SURFACES TO MATCH EXISTING AND/OR TO RECEIVE NEW FINISH. SEE ROOM FINISH SCHEDULE.
4.1	(2) REMOVE EXISTING MASONRY UNITS AS REQUIRED FOR THE PROPER INSTALLATION OF A NEW DOOR ASSEMBLY, WINDOW ASSEMBLY OR OPENING. COORDINATE WITH FLOOR PLANS AND MANUFACTURER'S REQUIREMENTS.
15.1	(3) REMOVE AND DISPOSE OF EXISTING CEILING TILES. EXISTING GRID TO REMAIN PREPARE FOR NEW CEILING TILES.
6.1	(4) REMOVE AND DISPOSE OF EXIST. CEILING FINISH AND FRAMING.
6.1, 8.1	(5) REMOVE AND DISPOSE OF DOOR, FRAME, AND HARDWARE. REMOVE ALL EXIST. SEALANT MATERIAL FROM WALLS AND CEILINGS AROUND EXIST. FRAMES.
4.1, 6.1, 9.1, 9.2	(6) REMOVE AND DISPOSE OF EXISTING CASEWORK, RACK OR SHELVING AND ASSOCIATED ITEMS. REMOVE ANCHORS WHERE APPLICABLE. PATCH AND PREPARE REMAINING SURFACES FOR EITHER NEW FINISHES OR TO MATCH EXIST. WHERE NEW CASEWORK IS NOT INSTALLED. (SEE COLOR AND EQUIPMENT PLANS).
6.1, 9.1	(7) REMOVE & DISPOSE OF MARKER BOARD, CHALKBOARD, OR TACK BOARD. PATCH AND PAINT WALL AS REQ.
9.3	(8) REMOVE AND PROPERLY DISPOSE OF EXISTING VCT FLOORING AND BASE. PATCH AND PREPARE CONCRETE SLAB FOR NEW FLOOR FINISH. COORDINATE WITH COLOR LAYOUT PLANS FOR NEW FLOOR FINISHES.
8.1	(9) REMOVE AND DISPOSE OF EXIST. WINDOW FRAMING AND GLASS.
6.1	(10) REMOVE AND DISPOSE OF EXIST. DISPLAY CASE.
15.1	(11) REMOVE MECHANICAL OR PLUMBING ITEM. REFER TO MECHANICAL & PLUMBING PLANS FOR ADDITIONAL INFORMATION.
6.1	(12) REMOVE AND DISPOSE OF TOILET PARTITIONS, SCREENS, AND ALL ATTACHED COMPONENTS INCLUDING TOILET ACCESSORIES. PATCH ALL SURFACES WHERE EXISTING FASTENER HOLES WILL NOT BE REUSED OR COVERED BY NEW PARTITIONS.
6.1 - perform 15.1 - layout for cutting	(13) REMOVE EXISTING CEILING TILE AND GRID. CUT GRID NEAR WALL BUT DO NOT REMOVE GRID FROM WALL WHERE GRID IS TO REMAIN IN ADJOINING ROOMS AND IS SUPPORTING PARTITION SYSTEM.
6.1	(14) REMOVE EXISTING METAL LOCKER UNITS, TRIM PANELS, SLOPED TOPS, AND ALL OTHER ASSOCIATED ITEMS AS REQ. FOR NEW LOCKER INSTALLATION
8.1	(15) REMOVE EXIST. STONE AGGREGATE PANELS BELOW WINDOW SILL. REMOVE AND REINSTALL WINDOW SILL FLASHING AS REQUIRED. SEE ELEVATION VIEWS AND DETAILS FOR MORE SPECIFIC INFORMATION.
6.1	(16) REMOVE AND DISPOSE OF EXISTING STONE AGGREGATE FASCIA PANELS. REMOVE AND REINSTALL FASCIA/COPING AS REQ. SEE DETAILS FOR MORE SPECIFIC INFORMATION.
8.1	(17) REMOVE EXIST. STONE AGGREGATE PANELS OVER DOOR AND WINDOW. REMOVE AND REINSTALL ROOF FLASHING AS REQUIRED. REMOVE SEALANT JOINT BETWEEN WINDOW/DOOR FRAME AND PANEL AS REQ. TO PREP FOR NEW PANEL AND SEALANT JOINT. SEE ELEVATION VIEWS AND DETAILS FOR MORE SPECIFIC INFORMATION.

WORK SCOPE ASSIGNMENT		
8.1	(18)	REMOVE EXIST. STONE AGGREGATE PANELS FROM WINDOW FRAME. REMOVE AND REINSTALL WINDOW STOPS AS REQ. FOR DEMO AND NEW PANELS. SEE ELEVATION VIEWS AND DETAILS FOR MORE SPECIFIC INFORMATION.
15.1	(19)	REMOVE AND DISPOSE OF EXISTING CEILING TILES. EXISTING GRID TO REMAIN TO SUPPORT EXISTING METAL WALL PANELS. CONTRACTORS MAY REMOVE SMALL SECTIONS OF CEILING GRID AS REQ. FOR INSTALLATION OF NEW DUCTWORK.
9.2	(20)	REMOVE EXISTING FLOOR CURB AT SHOWER ROOM DOOR.
9.3	(21)	REMOVE AND PROPERLY DISPOSE OF EXISTING CARPET FLOORING TO EXISTING CONCRETE SLAB. PATCH AND PREPARE CONCRETE SLAB FOR NEW FLOOR FINISH. COORDINATE WITH COLOR LAYOUT PLANS FOR NEW FLOOR FINISHES.
15.1 cut & replace	(22)	REMOVE EXIST. FLOOR FINISH AND FLOOR SLAB AS REQUIRED TO TERMINATE PLUMBING BELOW FLOOR.
15.1 cut & replace	(23)	REMOVE EXIST. FLOOR FINISH AND FLOOR SLAB AS REQUIRED TO INSTALL NEW PLUMBING PIPING.
6.1	(24)	REMOVE AND REINSTALL GRID AND TILE CEILING AS REQ. FOR NEW MECH. PIPING OR DUCT WORK.
9.3	(25)	VAT FLOORING REMOVAL BY OWNER. PREP FOR NEW FLOORING AND BASE.
9.2	(26)	REMOVE CERAMIC FLOOR TILE AND BASE
8.1	(27)	REMOVE DOOR AND HARDWARE, FRAME SHALL REMAIN.
6.1	(28)	REMOVE AND RELOCATE HIGH DENSITY STORAGE UNIT, SEE FLOOR PLAN FOR NEW LOCATION.
6.1, 9.1, 9.3	(29)	REMOVE EXISTING STUD WALL CONSTRUCTION AND ANY RELATED BRACING/SUPPORTS. PATCH AND REPAIR REMAINING FLOOR AND/OR WALL SURFACES TO MATCH EXISTING AND/OR TO RECEIVE NEW FINISH. SEE ROOM FINISH SCHEDULE.
6.1	(30)	CUT AND REMOVE EXIST. GYP. AND ACOUSTICAL TILE CEILING SYSTEM AS REQ. TO ACCESS AND REPLACE DUCTS. STRIP ALL 12X12 TILE FROM CEILING AREA.
6.1	(31)	REMOVE EXISTING WORK BENCH AND RELOCATE INTO METAL SHOP IN LOCATION AS DIRECTED BY OWNER.
9.3	(32)	REMOVE EXISTING RUBBER BASE FROM BOTTOM OF CASEWORK AS REQ. FOR NEW FLOOR AND BASE.
6.1	(33)	REMOVE EXISTING PIPE RAIL AND WOOD TRIM AS REQ. FOR NEW MEZ. WALL, SEE WALL DETAIL FOR ADDITIONAL DEMOLITION INFORMATION.
6.1	(34)	REMOVE AND REINSTALL CEILING TILE AND GRID AS REQ. FOR REPLACEMENT OF DOOR AND FRAME.
TSD	(35)	OWNER TO REMOVE EXISTING FURNITURE OR EQUIPMENT ITEM
4.1, 15.1, 15.2, 16.1	(36)	REMOVE EXIST. LOUVER, GRATE, LINTEL AND MASONRY WALL MATERIAL AS REQ. FOR NEW LOUVER OPENING. COORDINATE W/ MECHANICAL PLANS FOR LOUVER SIZES.
15.1	(37)	REMOVE EXIST. GLAZED MASONRY UNIT AROUND DF AS REQ. TO INSTALL NEW DF AND REWORK PLUMBING PIPING.
15.1	(38)	REMOVE EXIST. GLAZED MASONRY UNIT AROUND DF AS REQ. TO INSTALL NEW DF AND REWORK PLUMBING PIPING. SEE INTERIOR ELEVATIONS FOR NEW MASONRY LAYOUT AND COLOR.

SECTION 00220
WORK SCOPE

BID CATEGORY – Site Construction 2.1

The Work of this Bid Category includes but is not limited to providing all labor, equipment, materials, scaffolding, hoisting and incidentals to complete all in accordance with the Contract Documents and applicable codes. All Work is to be performed as shown on the plans and specified in the following technical Specification sections:

Section	Name
02230	Site Clearing
02300	Earthwork
	Geotechnical Soils Report
02630	Storm Drainage
02741	Hot Mix Asphalt Paving
02751	Cement Concrete Pavement
02840	Walk, Road and Parking Appurtenances
02920	Lawns and Grasses
02930	Exterior Plants

In addition to the above, this Bid Category requires adherence to but not limited to the Bidding Documents, the Bidding and Contract requirements and Division 1 General Requirements of the Project Manual and coordination with various other technical Specifications interfacing with this Work. The Bidder is advised to review the Work descriptions of the other Bid Categories as set forth in Section 00210 of the Project Manual so as to not misunderstand scope responsibilities.

THE SCOPE OF WORK IS TO INCLUDE, but is not limited to, the following items:

1. Reference work scope assignments designated to the Architectural Demolition Notes, which can be found behind Project Manual section 00210 – Description of the Work/Special Provisions. These work scope assignments are to be included in your base bid.

2. Furnish and install temporary construction road at Smith Middle School, for both additions. This includes stripping the ground surface at location of road. Temporary road is to consist of 6" 1x3 stone aggregate on geo-textile fabric 16'-0" wide. Remove temporary construction road prior to final restoration and restore site to original condition. This includes removal and replacement of concrete sidewalks and asphalt paving where temporary roads cross existing walks or drives.

3. This contractor is responsible to maintain and keep all site utilities/systems in working order that are within the work limits. Site utilities should be identified and marked by this contractor to proactively prevent interruptions in service. Employ the service of an independent contractor (such as **Power Plus – 248-344-0200**) to identify and mark underground services. Provide as-built drawings to BMC for distribution to other trades.

4. Perform all layouts as required to complete the work of this contract.

5. This contractor is responsible to have on-site supervision by this contractor for all sub-contractors for any work occurring within this work scope.

6. Temporary fencing is not the responsibility of this contractor. Permanent fencing is the responsibility of this contractor.

7. This contractor is responsible for all site demolition, clearing, grubbing and removal of existing pavement. Remove all spoils generated from this contractor's work.

8. New drive throats must be per City of Troy requirements. It is this contractor's responsibility to ensure drive throats are installed correctly and per City of Troy specifications.

9. ADA Tactile Detectable Warning Strips are the responsibility of this contractor.

10. Perform all rough and finish grading. Establish sub-grade for building pad at both additions (2). Place topsoil and seed where shown on drawings.

11. Furnish and install all landscaping as specified and shown.

12. Re-grade and establish building pad elevations following completion of foundation work.

13. This contractor is responsible to have all necessary equipment on site for proof roll(s).

14. Furnish and install all asphalt paving, concrete paving, concrete sidewalks, concrete curbs and gutters. Re-grade and dress all existing areas of stone base and sub base prior to placement of wearing course and curbs.

15. Control dust, created due to the execution of work in this contract, and maintain clean roadways entering into the campus where all contractors, suppliers, and deliveries will travel.

16. Perform all dewatering necessary by any contractor to maintain the project schedule.

17. Furnish and install all necessary site signage per this contractor's scope.

18. Provide 48-hour notice to the Construction Manager prior to placement of backfill, concrete and asphalt so the testing laboratory can be scheduled to test these materials. This contractor will be responsible for the cost of emergency testing services if the 48-hour notice is not given. The contractor's on-site foreman shall be present during testing and field reviews conducted by various inspection agencies.

19. Coordinate with the site superintendent regarding a designated wash out area. It will be this contractor's responsibility to remove their spoils at the appropriate time.

20. This contractor will be responsible to install, maintain, and remove a firm, properly graded, and drained area for the steel erector. This area must be readily accessible to the work and have adequate space for the sage storage of material and the safe operation of construction activities. The area shall be stripped of topsoil, and cut to a level suitable to install geo textile fabric, a large aggregate base, and a topping of 21AA. Coordinate exact location with Barton Malow. Total area shall equal 50,000 sq. ft. This contractor will remove all temporary materials from site and restore area to existing grades utilizing suitable backfill, topsoil, and seeding.

21. Furnish and install all underground piping and structures. It is this contractor's responsibility to bring all underground piping within 5'-0" of the building.

22. Furnish, install, maintain and replace if needed, all erosion control measures and protection barriers, tree protection and drainage structure protection that is in place and is required by authorities having jurisdiction, until City of Troy acceptance is granted, erosion control measures are this contractor's responsibility.

23. Reference Geo Tech report and notes on S1.1 pertaining to soil conditions. Imported engineered fill shall be furnished and placed beneath building additions and parking lots.

24. This contractor shall provide a soil erosion operator and comply with the Environmental Protection Agency's storm water regulations and the Michigan Department of Environmental Quality's National Pollutant Elimination System. This includes, but is not limited to, inspection of the soil erosion and sedimentation control practices once a week and within 24 hours of a rainfall. A written report including photographs of the inspection and the maintenance of a log of written reports is requested. The inspections must start with the commencement of the construction schedule and continue until the site is completely stabilized and a Notice of Termination is filed with the M.D.E.Q. Copies of the reports must be forwarded monthly to BMC.

25. Dumpsters will NOT be provided by the owner for this category. Include use and disposal of dumpsters in this bid.

26. Final cleaning and/or brooming of surfaces must be performed prior to owner turnover.

27. Include an allowance of $15,000, for maintenance of stone paths at Smith Middle School, to be used at Barton Malow's discretion. Any and all time tickets pertaining to this allowance are to be signed by Barton Malow and submitted on a daily basis. No time tickets will be accepted unendorsed. Allowance when billed shall be exclusive of mar-ups and fees. Include these costs in your base bid.

EXCLUDED FROM THIS CONTRACTOR'S WORK is:

1. **N/A**

SPECIAL CONSIDERATIONS:

1. This Bidder is required to submit unit prices identified in the Bidding Documents which pertain to their work. These prices must be separate from their base bid on the Bid Proposal Form as described in Section 0200 Instructions to Bidders.

2. All work under this scope shall comply with proper trade jurisdictions, even if it is necessary to assemble composite crews or subcontract to appropriate trades.

3. The special provisions outlined in **Section 00210 Description of the Work** form a part of this bid category work description and apply to this Bidder's scope of work.

4. Take special precautions when working near occupied spaces with regards to fumes, noise and pollution levels. Some work may be necessary to be performed after the school day is over at this contractor expense.

5. Any in-place temporary protection that requires any disassembly to perform work, etc. must be replaced by contractor installing new work. Temporary protection must be restored to condition intended.

6. Section **00410, Familial Disclosure Statement**, **must** be filled out and included with your Bid for your Bid to be accepted.

7. This bidder is responsible to bring signed and notarized safety affidavit (Section **00430**) to post bid meeting with Barton Malow Company. Contractor can not be recommended for award without this document in hand.

END OF SECTION 00220 – SITE CONSTRUCTION 2.1

SECTION 00220
WORK SCOPE

BID CATEGORY – Concrete 3.1

The work of this bid category includes but is not limited to providing all labor, equipment, materials, scaffolding, hoisting and incidentals to complete all concrete in accordance with the specifications, drawings and applicable codes. All work is to be performed as shown on the plans and specified in the following technical specification sections:

Section	Name
01731	Cutting and Patching
01732	Selective Demolition
03300	Cast in place concrete
03542	Hydraulic-Cement-Based Underlayment
07210	Building Insulation
07920	Joint Sealants

In addition to the above, this bid category includes but is not limited to the Bidding Documents, the Bidding and Contract requirements and Division 1 General Requirements of the Project Manual and various other Technical Specifications interfacing with this work. The bidder is advised to review the work descriptions of the other categories so as to not misunderstand scope responsibilities.

THE SCOPE OF WORK IS TO INCLUDE, but is not limited to, the following items:

1. Reference work scope assignments designated to the Architectural Demolition Notes, which can be found behind Project Manual section 00210 – Description of the Work/Special Provisions. These work scope assignments are to be included in your base bid.

2. Perform all layout necessary to complete this contractor's work. It is this contractors responsibility to identify and locate site utilities prior to excavation of footings.

3. Excavate for and place concrete including but not limited to floor slabs, foundations, footings, entry stoops, stairs and equipment pads as shown on drawings. Perform floor patching. Replace backfill at excavations and remove spoils off site.

4. Patch floors where existing walls are shown to be removed.

5. Install exterior perimeter insulation at foundations.

6. Furnish and install all reinforcement steel as detailed in this contractors work.

7. Sub-grade will be established inside the building footprint + or – 4". Re grade below slabs, and re-establish sub-grade elevation. Furnish and install compacted granular base material.

8. Provide 48-hour notice to the Construction Manager prior to the placement of backfill or concrete so the testing laboratory can be scheduled to test these materials. This contractor will be responsible for the cost of emergency testing services if the 48-hour notice is not given. The

contractor's on-site foreman shall be present during testing and field reviews conducted by various inspection agencies.

9. Install all anchor bolts, leveling/anchor plates, and mechanical/electrical sleeves in your work. These items are to be provided by 5.1 – Steel and 15.1/16.1 – Mechanical/Electrical contractors respectively. Coordinate with necessary trades for placement of such items.
10. Coordinate with the site Superintendent regarding a designated wash out area. It will be this contractor's responsibility to remove their spoils at the appropriate time.
11. Re-grade areas disturbed by work activities of this category within the building footprint.
12. Dumpsters indicated to be provided by the Owner in the General Requirements and Supplementary Conditions WILL NOT be provided for this category.
13. Provide daily clean-up, according to Barton Malow standards, including daily removal of all materials and debris related to this category. If daily clean-up is not performed, the Construction Manager will provide his labor to complete the clean-up and the appropriate contractor will be back-charged.
14. Final cleaning must be included as part of this base bid.

EXCLUDED FROM THIS CONTRACTOR'S WORK is:

1. **N/A**

SPECIAL CONSIDERATIONS:

1. The special provisions outlined in **Section 00210 Description of the Work** form a part of this bid category work description and apply to this Bidder's scope of work.

2. All work under this scope shall comply with proper trade jurisdictions, even if it is necessary to assemble composite crews or subcontract to appropriate trades.

3. This Bidder is required to submit alternate prices identified in the Bidding Documents which pertain to their work. These alternate prices must be separate from their base bid on the Bid Proposal Form as described in Section 00200 Instructions to Bidders.

4. Take special precautions when working near occupied spaces with regards to fumes, noise and pollution levels. Some work may be necessary to be performed after the school day is over at this contractor's expense.

5. Any in-place temporary protection that requires any disassembly to perform work, etc. must be replaced by contractor installing new work. Temporary protection must be restored to condition intended.

6. Section **00410, Familial Disclosure Statement, must** be filled out and included with your Bid for your Bid to be accepted.

7. This bidder is responsible to bring signed and notarized safety affidavit (Section **00430**) to post bid meeting with Barton Malow Company. Contractor can not be recommended for award without this document in hand.

END OF SECTION 00220 – CONCRETE 3.1

SECTION 00220
WORK SCOPE

BID CATEGORY – Masonry 4.1

The Work of this Bid Category includes but is not limited to providing all labor, equipment, materials, scaffolding, hoisting and incidentals to complete all in accordance with the Contract Documents and applicable codes. All Work is to be performed as shown on the plans and specified in the following technical Specification sections:

Section	Name
01731	Cutting and Patching
01732	Selective Demolition
04720	Cast Stone
04810	Unit Masonry Assemblies
07210	Building Insulation
07841	Through-Penetration Firestop Systems
07842	Fire-Resistive Joint Systems
07920	Joint Sealants

In addition to the above, this Bid Category requires adherence to but not limited to the Bidding Documents, the Bidding and Contract requirements and Division 1 General Requirements of the Project Manual and coordination with various other technical Specifications interfacing with this Work. The Bidder is advised to review the Work descriptions of the other Bid Categories as set forth in Section 00210 of the Project Manual so as to not misunderstand scope responsibilities.

THE SCOPE OF WORK IS TO INCLUDE, but is not limited to, the following items:

1. Reference work scope assignments designated to the Architectural Demolition Notes, which can be found behind Project Manual section 00210 – Description of the Work/Special Provisions. These work scope assignments are to be included in your base bid.
2. Perform all layout and engineering associated with this work necessary to perform a complete job using established building lines, control points, and elevations. It is this contractor's responsibility to field verify the accuracy of survey points provided, prior to job startup/mobilization.
3. Tooth in any areas necessary pertaining to the tie in of the addition(s) to the existing building or for new and/or larger openings necessary in the existing building.
4. Patch existing masonry surfaces to match existing where affected by demolition and / or shown on demolition drawings.
5. Provide CMU infill where existing windows, doors, louvers, etc. have been removed. Tooth in brick to match existing.
6. Unload, store, protect, and install metal fabrications provided by 5.1 - Steel and 6.1 - Carpentry contractors. Coordinate placement of steel plates with 5.1 - Steel contractor.
7. Furnish and install all building damproofing shown on masonry walls.

8. Furnish and install building insulation including all spray foam insulation, at masonry walls. Category 6.1 – Carpentry is responsible for all insulation behind metal wall panels.

9. Install all miscellaneous structural steel beams and lintels, plates, steel reinforcement miscellaneous steel supports and bond beams required to support masonry. Include all welding, bolting, anchorages etc.

10. This contractor is responsible for all firestopping on existing and new CMU walls called out on plans, per UL listing standards in the specifications. See code compliance sheets in the drawings for further clarification.

11. Furnish and install all rebar (including horizontal, vertical, and positioning accessories) necessary for CMU walls.

12. Install hollow metal door and window frames and associated anchors in all masonry walls.

13. Install sleeves furnished by other trades.

14. Furnish and install bond breaker strips.

15. Furnish and install sealant within exterior and interior masonry wall construction and when masonry abuts an existing dissimilar surface.

16. Provide all necessary barricades, safety and warning devices until this work is safe and complete.

17. Provide hoisting, scaffolding, and lifting equipment necessary for the execution of this work.

18. Perform brick washing in accordance with specifications and protect adjacent materials to prevent damage to finishes from the cleaning process. Clean block-walls to provide a smooth surface suitable for paint. Condition of interior block must be left in a condition suitable for painting.

19. 15.1 - Mechanical will provide layout drawings for through wall penetrations of mechanical systems to 4.1 - Masonry at least two weeks prior to block installation in that unit. Any layout drawings not provided in this time frame may result in a back charge to the Mechanical contractor.

20. Cutting of walls for installation of electrical / technology boxes provided by others are this contractor's responsibility within masonry walls. The masonry, electrical and carpentry contractors will share the responsibility and any cost incurred for adjustment to ensure a square/plumb quality finished product.

21. Coordinate with the site Superintendent regarding a designated wash out area. It will be this contractor's responsibility to remove their spoils at the appropriate time.

22. Cutting and welding operations shall cease 2 hours prior to the close of construction each day to minimize the risk of undetected smoldering fire. Contractors performing such operations shall have within their immediate work area, ABC-type fire extinguisher(s). Only wet cutting will be permitted.

23. Furnish and install all joint systems within masonry walls and where masonry walls meet existing surfaces.

24. Dumpsters indicated to be provided by the Owner in the General Requirements and Supplementary Conditions WILL NOT be provided for this category.

25. Provide daily clean-up according to Barton Malow standards, including daily removal of all materials and debris related to this category. If daily clean-up is not performed the Construction Manager will provide labor to perform the clean-up and the appropriate contractor will be back-charged.

26. Final cleaning and/or brooming must be included in base bid.

27. Include $3,000 allowance to be used as directed by BMC. Any and all time tickets pertaining to this allowance are to be signed by Barton Malow and submitted on a daily basis. No time tickets will be accepted unendorsed. Allowance when billed shall be exclusive of mar-ups and fees. Include these costs in your base bid.

EXCLUDED FROM THIS CONTRACTOR'S WORK is:

1. **N/A**

SPECIAL CONSIDERATIONS:

1. All work under this scope shall comply with proper trade jurisdictions, even if it is necessary to assemble composite crews or subcontract to appropriate trades.

2. The special provisions outlined in **Section 00210 Description of the Work** form a part of this bid category work description and apply to this bidder's scope of work.

3. This Bidder is required to submit alternate prices identified in the Bidding Documents which pertain to their work. These alternate prices must be separate from their base bid on the Bid Proposal Form as described in Section 00200 Instructions to Bidders.

4. Take special precautions when working near occupied spaces with regards to fumes, noise and pollution levels. Some work may be necessary to be performed after the school day is over at this contractor expense.

5. Any in-place temporary protection that requires any disassembly to perform work, etc. must be replaced by contractor installing new work. Temporary protection must be restored to condition intended.

6. Section **00410, Familial Disclosure Statement, must** be filled out and included with your Bid for your Bid to be accepted.

7. This bidder is responsible to bring signed and notarized safety affidavit (Section **00430**) to post bid meeting with Barton Malow Company. Contractor can not be recommended for award without this document in hand.

END OF SECTION 00220 – MASONRY 4.1

SECTION 00220
WORK SCOPE

BID CATEGORY – Structural Steel 5.1

The Work of this Bid Category includes but is not limited to providing all labor, equipment, materials, scaffolding, hoisting and incidentals to complete all in accordance with the Contract Documents and applicable codes. All Work is to be performed as shown on the plans and specified in the following technical Specification sections:

Section	Name
01731	Cutting and Patching
05120	Structural Steel
05210	Steel Joists
05310	Steel Deck

In addition to the above, this Bid Category requires adherence to but not limited to the Bidding Documents, the Bidding and Contract requirements and Division 1 General Requirements of the Project Manual and coordination with various other technical Specifications interfacing with this Work. The Bidder is advised to review the Work descriptions of other Bid Categories as set forth in Section 00210 of the Project Manual so as to not misunderstand scope responsibilities.

THE SCOPE OF WORK IS TO INCLUDE, but is not limited to, the following items:

1. Reference work scope assignments designated to the Architectural Demolition Notes, which can be found behind Project Manual section 00210 – Description of the Work/Special Provisions. These work scope assignments are to be included in your base bid.

2. Perform all lay-out and supply all materials as shown and required by the drawings, specifications and job conditions as required to complete the work of this contract.

3. This contractor will cut all roof penetrations in steel decking as laid out by the carpentry, mechanical, and/or electrical contractor.

4. Provide on site supervision by this trade for all subcontractors of this trade.

5. Provide and maintain ladders necessary for this contractors work. It is this contractor's responsibility to relocate ladders if necessary.

6. Furnish and install roof drain pans and associated framing.

7. Furnish anchor bolts to concrete 3.1 contractors. Before steel erection obtain test reports on anchor bolts from concrete 3.1 contractor to verify that test results meet ASTM standards.

8. Furnish anchor/leveling plates to 3.1 – Concrete contractor for installation by 3.1 – Concrete contractor.

9. Prime paint, including touch-up, on scratched or blemished spots after erection is complete. This includes touch-up of field welds and bolting.

10. Any utility disturbed by this contractor shall be repaired and placed in service immediately and the cost associated to do so will be this contractor's responsibility.

11. This project will enforce the use of 100% fall protection for all exposures 6 feet or greater for all workers (including connecting, detailing, and decking).

12. Cutting and welding operations shall cease 2 hours prior to the close of construction each day to minimize the risk of undetected smoldering fire. Contractors performing such operations shall have within their immediate work area, ABC-type fire extinguisher(s).

13. Furnish and install ladders at each roof hatch. Ladders must conform to building codes. Furnish and install roof opening framing as shown and for roof hatch as necessary.

14. Provide all necessary barricades, safety, and warning devices for this work. Including all welded metal fabrications with metal cables.

15. This contractor shall plan on timely installation and removal of debris from lay-down area and site.

16. Contractor is responsible for de-mudding of vehicles prior to leaving the construction site.

17. All stored materials must be kept on dunnage and off the ground.

18. Provide and maintain, while on site, MIOSHA approved temporary guardrails and perimeter cables as required. Plan to return to the site on 2 separate occasions for repairs to in-place guardrails and/or perimeter cables. Include in this bid and plan to remove temporary guardrails and perimeter cables on different days, on each unit, as directed by BMC.

19. Provide daily clean-up, according to Barton Malow standards, including daily removal of all materials and debris related to this category. If daily clean-up is not performed, the Construction Manager will provide his labor to complete the clean-up and the appropriate contractor will be back-charged.

20. Final cleaning of finish installations must be included within this bid.

21. Include a $1,000 allowance to be used for miscellaneous steel as directed by BMC. Any and all time tickets pertaining to this allowance are to be signed by Barton Malow and submitted on a daily basis. No time tickets will be accepted unendorsed. Allowance when billed shall be exclusive of mar-ups and fees. Include these costs in your base bid.

EXCLUDED FROM THIS CONTRACTOR'S WORK is:

1. **N/A**

SPECIAL CONSIDERATIONS:

1. All work under this scope shall comply with proper trade jurisdictions, even if it is necessary to assemble composite crews or subcontract to appropriate trades.

2. The special provisions outlined in **Section 00210 Description of the Work** form a part of this bid category work description and apply to this bidder's scope of work.

3. This Bidder is required to submit alternate prices identified in the Bidding Documents which pertain to their work. These alternate prices must be separate from their base bid on the Bid Proposal Form as described in Section 00200 Instructions to Bidders.

4. Take special precautions when working near occupied spaces with regards to fumes, noise and pollution levels. Some work may be necessary to be performed after the school day is over at this contractor expense.

5. Any in-place temporary protection that requires any disassembly to perform work, etc. must be replaced by contractor installing new work. Temporary protection must be restored to condition intended.

6. Section **00410, Familial Disclosure Statement, must** be filled out and included with your Bid for your Bid to be accepted.

7. This bidder is responsible to bring signed and notarized safety affidavit (Section **00430**) to post bid meeting with Barton Malow Company. Contractor can not be recommended for award without this document in hand.

END OF SECTION 00220 – STRUCTURAL STEEL 5.1

SECTION 00220
WORK SCOPE

BID CATEGORY – Carpentry and Acoustical Ceilings 6.1

The Work of this Bid Category includes but is not limited to providing all labor, equipment, materials, scaffolding, hoisting and incidentals to complete all **carpentry, doors and hardware, drywall, ceilings and miscellaneous as noted** in accordance with the Contract Documents and applicable codes. All Work is to be performed as shown on the plans and specified in the following technical Specification sections:

Section	Name
01230	Alternate
01731	Cutting and Patching
01732	Selective Demolition
04810	Unit Masonry Assemblies
05400	Cold-Formed Metal Framing
06105	Miscellaneous Carpentry
07210	Building Insulation
07720	Roof Accessories
07841	Through-penetration Firestop Systems
07842	Fire-Resistive Joint Systems
07920	Joint Sealants
08111	Standard Steel Doors and Frames
08211	Flush Wood Doors
08311	Access Doors and Frames
08710	Door Hardware
09111	Non-Load Bearing Steel Framing
09250	Gypsum Board
09511	Acoustical Panel Ceilings
10101	Visual Display Surfaces
10155	Toilet Compartments
10505	Metal Lockers
10520	Fire-Protection Specialties
11132	Projection Screens
12355	Institutional Casework

In addition to the above, this Bid Category requires adherence to but not limited to the Bidding Documents, the Bidding and Contract requirements and Division 1 General Requirements of the Project Manual and coordination with various other technical Specifications interfacing with this Work. The Bidder is advised to review the Work descriptions of the other Bid Categories as set forth in Section 00210 of the Project Manual so as to not misunderstand scope responsibilities.

THE SCOPE OF WORK IS TO INCLUDE, but is not limited to, the following items:

1. Reference work scope assignments designated to the Architectural Demolition Notes, which can be found behind Project Manual section 00210 – Description of the Work/Special Provisions. These work scope assignments are to be included in your base bid.
2. Furnish and install items listed in specification sections above.

3. Furnish and install all rough carpentry, finish carpentry, wood treatments, wood blocking, sleepers, nailers, curbs, framing, and plywood indicated on the drawings. Include all window blocking and roof blocking. Include casework/equipment blocking. Coordinate with appropriate supplier/installer.
4. Furnish and receive all wood doors, hollow metal frames, and door hardware. Store doors and frames prior to installation including insulated panels and louvers in doors. Doors and frames are to be free of rust and debris upon installation. Contractor will be responsible for removing any rust that may appear on the steel doors and frames. Perform all trouble-shooting and correction of hardware problems after owner occupancy for the duration of the warranty period.
5. This contractor is responsible for installation of all new and re-used ceiling tiles. Coordinate with 15.1 – Mechanical contractor.
6. Furnish and install all access panels in gypsum walls and/or ceilings as shown on plans. Install access panels provided by mechanical and electrical trades.
7. This contractor is responsible for the support of all frames (door and window).
8. Lock cylinders for demolished doors that are to be replaced are to be salvaged, labeled, and turned over to the Owner.
9. Specification section 08710-1.4-D shall be superseded by the following: Keyway for all cylinders shall be provided per the Owner's schedule. Keying shall be by contractor, per the direction of the Owner.
10. Furnish and install all institutional casework required for a complete installation. All final adjustments will be the responsibility of this contractor.
11. Casework cannot be stored on site. Must be stored at a bonded warehouse or trailer until needed.
12. This contractor is responsible for the covering of casework and countertops for protection against damage. Protection shall be cardboard or masonite.
13. Field verify all dimensions as walls are completed to expedite fabrication of casework.
14. Provide and coordinate the installation of all mechanical and electrical fixtures and devices, associated with casework, with the appropriate trades. Provide detailed rough-in drawings within twenty (20) calendar days of contract award.
15. Layout of piping to be reviewed by the casework contractor to avoid unnecessary cutting of casework. Piping layout on drawings is diagrammatic only.
16. The electrical and carpentry contractor will share the responsibility for a square/plumb installation of all electrical and technology boxes in gypsum wall assemblies. Any cost incurred to adjust boxes to ensure a quality finished product will be shared by these contractors
17. Z-girts and wall angle necessary for panel installation must be installed before spray foam insulation installation. Coordinate with 8.1 – Glazing & Metal Wall Panel contractor.
18. Furnish and maintain all necessary barricades, safety and warning devices for this work.
19. Furnish and install gypsum ceiling and soffit assemblies complete.

20. Furnish and install toilet compartments and provide all final adjustments. Field verify dimensions, before ordering, to ensure proper fit. It is the intent of the Architect, and the responsibility of this contractor, to reuse or cover/patch existing anchor holes.
21. Furnish and install building insulation as it relates to this contractors work. 4.1 - Masonry is responsible for building insulation at masonry walls, including spray foam insulation at masonry walls. 6.1 - Carpentry is responsible for all insulation behind existing wall panels.
22. Protect existing surfaces in rooms, while performing this contractor's work. Provide protection of this contractors installed work until Owner turnover. If any adjacent surfaces are damaged it will be the sole responsibility of the contractor at fault to completely repair and replace all damaged construction to the satisfaction of the owner, construction manager and architect.
23. Furnish and install all acoustical lay-in assembly materials.
24. Refer to code compliance plans (A0.0). Plan to furnish and install firestopping assemblies on all existing and new walls (except CMU walls). Ratings of assemblies shall meet UL #U905 standards.
25. Furnish and install all joint systems where this work abuts existing surfaces as shown. Caulk all products installed by this contractor where required for work of this work category.
26. Furnish and install building insulation including all spray foam insulation, at masonry walls. Category 6.1 – carpentry is responsible for all insulation behind metal wall panels.
27. Furnish and install one hour temporary walls with frame and locking door between existing building and new construction in two locations as directed by OFS and/or BMC. Patch and repair existing surfaces as needed upon temporary wall removal.
28. Field verify all openings, provide and install all trim, spaces and blanks necessary to properly install a complete locker system.
29. This project will enforce the use of 100% fall protection for all exposures 6 feet or greater for all workers.
30. Furnish and maintain dust mats at all construction area entrances and exits on both sides of doors. Clean as needed.
31. Final cleaning must be included as part of this base bid.
32. Include a $6,000 allowance to be used on a time and material basis as directed by BMC. Unused portions will be deducted from contract. Any and all time tickets pertaining to this allowance are to be signed by Barton Malow and submitted on a daily basis. No time tickets will be accepted unendorsed. Allowance when billed shall be exclusive of mar-ups and fees. Include these costs in your base bid.

EXCLUDED FROM THIS CONTRACTOR'S WORK is:

1. **N/A**

SPECIAL CONSIDERATIONS:

1. All work under this scope shall comply with proper trade jurisdictions, even if it is necessary to assemble composite crews or subcontract to appropriate trades.

2. The special provisions outlined in **Section 00210 Description of the Work** form a part of this bid category work description and apply to this bidder's scope of work.

3. This Bidder is required to submit alternate prices identified in the Bidding Documents which pertain to their work. These alternate prices must be separate from their base bid on the Bid Proposal Form as described in Section 00200 Instructions to Bidders.

4. Take special precautions when working near occupied spaces with regards to fumes, noise and pollution levels. Some work may be necessary to be performed after the school day is over at this contractor expense.

5. Any in-place temporary protection that requires any disassembly to perform work, etc. must be replaced by contractor installing new work. Temporary protection must be restored to condition intended.

6. Section **00410, Familial Disclosure Statement, must** be filled out and included with your Bid for your Bid to be accepted.

7. This bidder is responsible to bring signed and notarized safety affidavit (Section **00430**) to post bid meeting with Barton Malow Company. Contractor can not be recommended for award without this document in hand.

END OF SECTION 00220 – CARPENTRY AND ACOUSTICAL CEILINGS 6.1

SECTION 00220
WORK SCOPE

BID CATEGORY – Roofing 7.1

The Work of this Bid Category includes but is not limited to providing all labor, equipment, materials, scaffolding, hoisting and incidentals to complete all in accordance with the Contract Documents and applicable codes. All Work is to be performed as shown on the plans and specified in the following technical Specification sections:

Section	Name
01731	Cutting and Patching
01732	Selective Demolition
07210	Building Insulation
07552	Modified Bituminous Membrane Roofing
07710	Manufactured Roof Specialties
07720	Roof Accessories
07841	Through Penetration Firestop Systems
07842	Fire-Resistive Joint Systems
08311	Access Doors and Frames

In addition to the above, this Bid Category requires adherence to but not limited to the Bidding Documents, the Bidding and Contract requirements and Division 1 General Requirements of the Project Manual and coordination with various other technical Specifications interfacing with this Work. The Bidder is advised to review the Work descriptions of the other Bid Categories as set forth in Section 00210 of the Project Manual so as to not misunderstand scope responsibilities.

THE SCOPE OF WORK IS TO INCLUDE, but is not limited to, the following items:

1. Reference work scope assignments designated to the Architectural Demolition Notes, which can be found behind Project Manual section 00210 – Description of the Work/Special Provisions. These work scope assignments are to be included in your base bid.

2. Furnish and install a complete roofing system as specified. Furnish and install any insulation and/or components as detailed or required for a complete positive draining roof system.

3. Install and level all roof mounted curbs. Layout is done by 15.1 – Mechanical and/or 16.1 - Electrical trades if the curb is for their equipment.

4. Furnish and install flashing around curbs, pipe sleeves, roof sumps, roof hatches, and any penetrations and/or ladders as shown on plans. Coordinate with mechanical/electrical contractor(s) for proper adjustments.

5. Perform all demolition and removal of existing roofing systems, coping and flashing associated with the existing roof. Provide a water tight patch until final roofing activities can be completed.

6. Furnish and install all waterproof underlayment that will be covered by roofing, flashing, or siding.

7. Furnish metal flashing, which form part of the roof system, to masonry contractor and coordinate installation.

8. This project will enforce the use of 100% fall protection for all exposures 6 feet or greater for all workers.

9. Remove any fall protection *anchors* installed by the steel contractor for fall protection prior to roof installation.

10. If this contractor chooses to have a roof monitor, it does not relieve the contractor from following MIOSHA and BMC tie-off rules.

11. Coordinate all penetrations necessary with the mechanical and electrical contractors. Cut roofing where required by other trades. It is this contractor's responsibility to remobilize if necessary for additional penetrations created after the initial roof is completed.

12. Witness installation of exhaust fans and all other roof mounted equipment and provide instruction when necessary to ensure that the roofing system is not compromised. Provide written report immediately following installation stating the condition of the roof prior to and subsequent installation of the new equipment.

13. Provide and maintain all necessary barricades, safety and warning devices for this work.

14. Provide protection of existing roof systems during installation of new roof until system is complete.

15. Do not throw materials off of the roof. All waste generated by the work in this category shall be removed off site.

16. Provide daily clean-up, according to Barton Malow standards, including daily removal of all materials and debris related to this category. If daily clean-up is not performed, the Construction Manager will provide his labor to complete the clean-up and the appropriate contractor will be back-charged.

17. Final cleaning of the finished roof system, prior to manufacturer's inspection, is this contractors responsibility.

EXCLUDED FROM THIS CONTRACTOR'S WORK is:

1. **N/A**

SPECIAL CONSIDERATIONS:

1. All work under this scope shall comply with proper trade jurisdictions, even if it is necessary to assemble composite crews or subcontract to appropriate trades.

2. The special provisions outlined in **Section 00210 Description of the Work** form a part of this bid category work description and apply to this bidder's scope of work.

3. This Bidder is required to submit alternate prices identified in the Bidding Documents which pertain to their work. These alternate prices must be separate from their base bid on the Bid Proposal Form as described in Section 00200 Instructions to Bidders.

4. Take special precautions when working near occupied spaces with regards to fumes, noise and pollution levels. Some work may be necessary to be performed after the school day is over at this contractor expense.

5. Any in-place temporary protection that requires any disassembly to perform work, etc. must be replaced by contractor installing new work. Temporary protection must be restored to condition intended.

6. Section **00410, Familial Disclosure Statement**, **must** be filled out and included with your Bid for your Bid to be accepted.

7. This bidder is responsible to bring signed and notarized safety affidavit (Section **00430**) to post bid meeting with Barton Malow Company. Contractor can not be recommended for award without this document in hand.

END OF SECTION 00220 - ROOFING 7.1

SECTION 00220
WORK SCOPE

BID CATEGORY – Glazing & Metal Wall Panels 8.1

The Work of this Bid Category includes but is not limited to providing all labor, equipment, materials, scaffolding, hoisting and incidentals to complete all in accordance with the Contract Documents and applicable codes. All Work is to be performed as shown on the plans and specified in the following technical Specification sections:

Section	Name
01731	Cutting and Patching
01732	Selective Demolition
07210	Building Insulation
07412	Metal Wall Panels
07920	Joint Sealants
08111	Standard Steel Doors and Frames
08411	Aluminum-Framed Entrances & Storefronts
08520	Aluminum Windows
08710	Door Hardware
08800	Glazing

In addition to the above, this Bid Category requires adherence to but not limited to the Bidding Documents, the Bidding and Contract requirements and Division 1 General Requirements of the Project Manual and coordination with various other technical Specifications interfacing with this Work. The Bidder is advised to review the Work descriptions of the other Bid Categories as set forth in Section 00210 of the Project Manual so as to not misunderstand scope responsibilities.

THE SCOPE OF WORK IS TO INCLUDE, but is not limited to, the following items:

1. Reference work scope assignments designated to the Architectural Demolition Notes, which can be found behind Project Manual section 00210 – Description of the Work/Special Provisions. These work scope assignments are to be included in your base bid.

2. Establish hold dimensions for all openings and provide written documentation required for hold open dimensions to 4.1 – Masonry and to the Construction Manger to distribute as necessary at least 2 weeks prior to block installation. Any layout drawings not provided in this time frame may result in a back charge to the 8.1 – Glazing & Metal Wall Panels contractor.

3. Demolition of all exterior doors, to be replaced, are the responsibility of this contractor. Where replacing doors and/or existing frames, include the removal and disposal of the existing door and frame. Hardware shall be salvaged and turned over to the Owner. Install temporary closure if new door cannot be installed within the work day.

4. If this contractor removes a window, it is this contractor's responsibility to install and maintain temporary protection in this opening.

5. Furnish and install aluminum framed entrances and storefronts, FRP doors, aluminum windows, screens, window hardware, and glazing and trim metal within or around these systems. This should also include glazing in doors, borrowed lite windows, insulated panels and louvers and other glazed openings.

6. Furnish and install all hardware for the above specified assemblies, including door hardware. Perform all adjustments necessary for hardware to operate satisfactorily.

7. Specification section 08710-1.4-D shall be superseded by the following: Keyway for all cylinders shall be provided per the Owner's schedule. Keying shall be by contractor, per the direction of the Owner.

8. It is this contractor's responsibility to coordinate with 6.1 – Carpentry to obtain fire-lite glazing sizes in all interior doors, side lites, and transoms. Installation must be coordinated with 6.1 – Carpentry to meet project schedule.

9. Furnish and install all metal wall panels as noted in plans and specifications under 07412 and furnish and install all metal wall panels noted on details. This is the contractor's responsibility to verify substrate and any problems thereof prior to installation of metal panels and metal wall panels.

10. Joint sealants must be installed on the perimeter of this contractors installed assemblies. Architectural joint sealants and/or weather sealant must be installed by this contractor on the exterior and interior of each window and storefront system.

11. Furnish and install all joint sealants where the work of this contractor meets adjacent surfaces.

12. Work must be furnished and installed per the project schedule.

13. Dispose of all unusable material in dumpster daily. Dumpsters will be provided by BMC for unidentifiable debris only.

14. Provide daily clean-up, according to Barton Malow standards, including daily removal of all materials and debris related to this category. If daily clean-up is not performed, the Construction Manager will provide his labor to complete the clean-up and the appropriate contractor will be back-charged.

15. Final cleaning must be included in this base bid and performance of will be directed by BMC when appropriate and logical.

EXCLUDED FROM THIS CONTRACTOR'S WORK is:

1. **N/A**

SPECIAL CONSIDERATIONS:

1. All work under this scope shall comply with proper trade jurisdictions, even if it is necessary to assemble composite crews or subcontract to appropriate trades.

2. The special provisions outlined in **Section 00210 Description of the Work** form a part of this bid category work description and apply to this bidder's scope of work.

3. This Bidder is required to submit alternate prices identified in the Bidding Documents which pertain to their work. These alternate prices must be separate from their base bid on the Bid Proposal Form as described in Section 00200 Instructions to Bidders.

4. Take special precautions when working near occupied spaces with regards to fumes, noise and pollution levels. Some work may be necessary to be performed after the school day is over at this contractor expense.

5. Any in-place temporary protection that requires any disassembly to perform work, etc. must be replaced by contractor installing new work. Temporary protection must be restored to condition intended.

6. Section **00410, Familial Disclosure Statement**, **must** be filled out and included with your Bid for your Bid to be accepted.

7. This bidder is responsible to bring signed and notarized safety affidavit (Section **00430**) to post bid meeting with Barton Malow Company. Contractor can not be recommended for award without this document in hand.

END OF SECTION 00220 – GLAZING & METAL WALL PANELS 8.1

SECTION 00220
WORK SCOPE

BID CATEGORY – Painting 9.1

The Work of this Bid Category includes but is not limited to providing all labor, equipment, materials, scaffolding, hoisting and incidentals to complete all in accordance with the Contract Documents and applicable codes. All Work is to be performed as shown on the plans and specified in the following technical Specification sections:

Section	Name
01731	Cutting and Patching
01732	Selective Demolition
07920	Joint Sealants
09911	Exterior Painting
09912	Interior Painting

In addition to the above, this Bid Category requires adherence to but not limited to the Bidding Documents, the Bidding and Contract requirements and Division 1 General Requirements of the Project Manual and coordination with various other technical Specifications interfacing with this Work. The Bidder is advised to review the Work descriptions of the other Bid Categories as set forth in Section 00210 of the Project Manual so as to not misunderstand scope responsibilities.

THE SCOPE OF WORK IS TO INCLUDE, but is not limited to, the following items:

1. Reference work scope assignments designated to the Architectural Demolition Notes, which can be found behind Project Manual section 00210 – Description of the Work/Special Provisions. These work scope assignments are to be included in your base bid.

2. Furnish and install all items listed or described in assigned Specification Sections and as indicated on the drawings and/or listed on the color plan layout.

3. Clean and prepare all walls, hollow metal doors and frames, and surfaces for finishing, including all required caulking, patching, sanding and minor repairs. Joint sealer is to be used at all interior finishes or all dissimilar metals and/or surfaces. If walls need more than minor prep notify job superintendent.

4. This contractor is responsible for removing or covering all cover plates, trim pieces and other pre-finished surfaces necessary for the performance of this work and replacing same at the conclusion of this Contractor's work. Cover and protect new work to avoid damage.

5. Provide finish painting for walls, ceilings, soffits and underside of deck where ceiling is exposed.

6. Provide finish painting of all hollow metal doors and frames as shown on drawings. Install joint sealant at perimeter of frames prior to painting.

7. Provide minor prep and paint existing wall surfaces where existing casework, shelving, toilet partitions and accessories are to be removed.

8. Provide finish painting of exposed pipes, conduit and ducts, hangers and exposed steel and ironwork as indicated on drawings. This includes hand railings and stringers.

9. If any adjacent surfaces are damaged it will be the sole responsibility of the contractor at fault to completely repair and replace all damaged construction to the satisfaction of the owner, construction manager and architect.

10. Provide daily clean-up, according to Barton Malow standards, including daily removal of all materials and debris related to this category. If daily clean-up is not performed, the Construction Manager will provide his labor to complete the clean-up and the appropriate contractor will be back-charged.

11. Final cleaning may not be excluded from this contract.

12. Provide an allowance of $3,000.00 in the base bid to cover the cost of touch-up painting needed following owner move in, or as directed by BMC. Any and all time tickets pertaining to this allowance are to be signed by Barton Malow and submitted on a daily basis. No time tickets will be accepted unendorsed. Allowance when billed shall be exclusive of mar-ups and fees. Include these costs in your base bid.

EXCLUDED FROM THIS CONTRACTOR'S WORK is:

1. **N/A**

SPECIAL CONSIDERATIONS:

1. All work under this scope shall comply with proper trade jurisdictions, even if it is necessary to assemble composite crews or subcontract to appropriate trades.

2. The special provisions outlined in **Section 00210 Description of the Work** form a part of this bid category work description and apply to this bidder's scope of work.

3. This Bidder is required to submit alternate prices identified in the Bidding Documents which pertain to their work. These alternate prices must be separate from their base bid on the Bid Proposal Form as described in Section 00200 Instructions to Bidders.

4. Take special precautions when working near occupied spaces with regards to fumes, noise and pollution levels. Some work may be necessary to be performed after the school day is over at this contractor expense.

5. Any in-place temporary protection that requires any disassembly to perform work, etc. must be replaced by contractor installing new work. Temporary protection must be restored to condition intended.

6. Section **00410, Familial Disclosure Statement**, **must** be filled out and included with your Bid for your Bid to be accepted.

7. This bidder is responsible to bring signed and notarized safety affidavit (Section **00430**) to post bid meeting with Barton Malow Company. Contractor can not be recommended for award without this document in hand.

END OF SECTION 00220 - PAINTING 9.1

SECTION 00220
WORK SCOPE

BID CATEGORY –Ceramic Tile 9.2

The Work of this Bid Category includes but is not limited to providing all labor, equipment, materials, scaffolding, hoisting and incidentals to complete all in accordance with the Contract Documents and applicable codes. All Work is to be performed as shown on the plans and specified in the following technical Specification sections:

Section	Name
01731	Cutting and Patching
01732	Selective Demolition
07920	Joint Sealants
09310	Ceramic Tile

In addition to the above, this Bid Category requires adherence to but not limited to the Bidding Documents, the Bidding and Contract requirements and Division 1 General Requirements of the Project Manual and coordination with various other technical Specifications interfacing with this Work. The Bidder is advised to review the Work descriptions of the other Bid Categories as set forth in Section 00210 of the Project Manual so as to not misunderstand scope responsibilities.

THE SCOPE OF WORK IS TO INCLUDE, but is not limited to, the following items:

1. Reference work scope assignments designated to the Architectural Demolition Notes, which can be found behind Project Manual section 00210 – Description of the Work/Special Provisions. These work scope assignments are to be included in your base bid.

2. Perform all layout as required to complete the work of this contract.

3. Control dust created by the execution of this contract.

4. Base bid shall include all necessary floor/wall prep including, but not limited to scarification, wall leveling, and insuring a substrate that is plumb and level. Coordinate all required depressions in new concrete with flat work contractor.

5. Furnish and install all ceramic tile flooring, ceramic tile base, beveled thresholds and all other accessory items required for a complete flooring installation.

6. Furnish and install all sealant joints where the work in this category abuts adjacent surfaces.

7. It is this contractor's responsibility to cover his work with temporary protection. This protection must be masonite, a minimum of 3/16" thickness.

8. Protect adjacent surfaces and finishes during installation of new work by this contractor.

9. If any adjacent surfaces are damaged it will be the sole responsibility of the contractor at fault to completely repair and replace all damaged construction to the satisfaction of the owner, construction manager and architect.

10. Cover, seal and protect new work in place to avoid damage until building is turned over to owner.

11. Provide daily clean-up, according to Barton Malow standards, including daily removal of all materials and debris related to this category. If daily clean-up is not performed, the Construction Manager will provide his labor to complete the clean-up and the appropriate contractor will be back-charged.

12. Final cleaning of this contractor's installed material must be included in base bid.

13. Include an allowance of $2,000 to be used at Barton Malow's discretion. Any and all time tickets pertaining to this allowance are to be signed by Barton Malow and submitted on a daily basis. No time tickets will be accepted unendorsed. Allowance when billed shall be exclusive of mar-ups and fees. Include these costs in your base bid.

EXCLUDED FROM THIS CONTRACTOR'S WORK is:

1. **N/A**

SPECIAL CONSIDERATIONS:

1. All work under this scope shall comply with proper trade jurisdictions, even if it is necessary to assemble composite crews or subcontract to appropriate trades.

2. The special provisions outlined in **Section 00210 Description of the Work** form a part of this bid category work description and apply to this bidder's scope of work.

3. This Bidder is required to submit alternate prices identified in the Bidding Documents which pertain to their work. These alternate prices must be separate from their base bid on the Bid Proposal Form as described in Section 00200 Instructions to Bidders.

4. Take special precautions when working near occupied spaces with regards to fumes, noise and pollution levels. Some work may be necessary to be performed after the school day is over at this contractor expense.

5. Any in-place temporary protection that requires any disassembly to perform work, etc. must be replaced by contractor installing new work. Temporary protection must be restored to condition intended.

6. Section **00410, Familial Disclosure Statement, must** be filled out and included with your Bid for your Bid to be accepted.

7. This bidder is responsible to bring signed and notarized safety affidavit (Section **00430**) to post bid meeting with Barton Malow Company. Contractor can not be recommended for award without this document in hand.

END OF SECTION 00220 – CERAMIC TILE 9.2

SECTION 00220
WORK SCOPE

BID CATEGORY – Carpet, Resilient Tile and Base 9.3

The Work of this Bid Category includes but is not limited to providing all labor, equipment, materials, scaffolding, hoisting and incidentals to complete all in accordance with the Contract Documents and applicable codes. All Work is to be performed as shown on the plans and specified in the following technical Specification sections:

Section	Name
01731	Cutting and Patching
01732	Selective Demolition
09651	Resilient Floor Tile
09653	Resilient Wall Base and Accessories
09681	Carpet Tile

In addition to the above, this Bid Category requires adherence to but not limited to the Bidding Documents, the Bidding and Contract requirements and Division 1 General Requirements of the Project Manual and coordination with various other technical Specifications interfacing with this Work. The Bidder is advised to review the Work descriptions of the other Bid Categories as set forth in Section 00210 of the Project Manual so as to not misunderstand scope responsibilities.

THE SCOPE OF WORK IS TO INCLUDE, but is not limited to, the following items:

1. Reference work scope assignments designated to the Architectural Demolition Notes, which can be found behind Project Manual section 00210 – Description of the Work/Special Provisions. These work scope assignments are to be included in your base bid.

2. Perform all layouts as required to complete the work of this contract.

3. Provide on-site supervision by this trade for all subcontractors of this trade.

4. Control dust created by the execution of this contract.

5. Base bid shall include all necessary floor prep (per manufacturer's thickness recommendation). Coordinate all required depressions in new concrete with flat work contractor. Include preparations for patching and repairing of flooring to match existing.

6. Furnish and install all resilient tile flooring, rubber base, and all other accessory items required for a complete flooring installation. Refer to any specific patterns indicated on drawings.

7. Furnish and install all sills, metal thresholds, doorsills and required transitions at all dissimilar floor materials.

8. Furnish and install rubber base at casework.

9. Furnish all carpet and VCT out of one dye lot to provide color unity.

10. Contractor is responsible to incur all costs for moisture testing and sealer, as required by flooring manufacturer's recommendation prior to installation of any flooring. Provide Barton Malow with written documentation one week prior to floor installation.

11. Protect adjacent surfaces while installing the new work of this contract.

12. If any adjacent surfaces are damaged it will be the sole responsibility of the contractor at fault to completely repair and replace all damaged construction to the satisfaction of the owner, construction manager and architect.

13. Provide and maintain a minimum of 3 ft. of adhesive floor protection as pathways on newly installed flooring surfaces provided by this contractor.

14. Clean existing walls of adhesive prior to installing new base material.

15. Provide daily clean-up, according to Barton Malow standards, including daily removal of all materials and debris related to this category. If daily clean-up is not performed, the Construction Manager will provide his labor to complete the clean-up and the appropriate contractor will be back-charged.

16. Final cleaning of this contractor's installed material must be included in base bid.

17. Include a $4,000 allowance to be used as directed by BMC. Any and all time tickets pertaining to this allowance are to be signed by Barton Malow and submitted on a daily basis. No time tickets will be accepted unendorsed. Allowance when billed shall be exclusive of mar-ups and fees. Include these costs in your base bid.

EXCLUDED FROM THIS CONTRACTOR'S WORK is:

1. **N/A**

SPECIAL CONSIDERATIONS:

1. All work under this scope shall comply with proper trade jurisdictions, even if it is necessary to assemble composite crews or subcontract to appropriate trades.

2. The special provisions outlined in **Section 00210 Description of the Work** form a part of this bid category work description and apply to this bidder's scope of work.

3. This Bidder is required to submit alternate prices identified in the Bidding Documents which pertain to their work. These alternate prices must be separate from their base bid on the Bid Proposal Form as described in Section 00200 Instructions to Bidders.

4. Take special precautions when working near occupied spaces with regards to fumes, noise and pollution levels. Some work may be necessary to be performed after the school day is over at this contractor expense.

5. Any in-place temporary protection that requires any disassembly to perform work, etc. must be replaced by contractor installing new work. Temporary protection must be restored to condition intended.

6. Section **00410, Familial Disclosure Statement, must** be filled out and included with your Bid for your Bid to be accepted.

7. This bidder is responsible to bring signed and notarized safety affidavit (Section **00430**) to post bid meeting with Barton Malow Company. Contractor can not be recommended for award without this document in hand.

END OF SECTION 00220 – CARPET, RESILIENT TILE AND BASE 9.3

SECTION 00220
WORK SCOPE

BID CATEGORY – Telescoping Stands 12.1

The Work of this Bid Category includes but is not limited to providing all labor, equipment, materials, scaffolding, hoisting and incidentals to complete all in accordance with the Contract Documents and applicable codes. All Work is to be performed as shown on the plans and specified in the following technical Specification sections:

Section	Name
12660	Telescoping Stands

In addition to the above, this Bid Category requires adherence to but not limited to the Bidding Documents, the Bidding and Contract requirements and Division 1 General Requirements of the Project Manual and coordination with various other technical Specifications interfacing with this Work. The Bidder is advised to review the Work descriptions of the other Bid Categories as set forth in Section 00210 of the Project Manual so as to not misunderstand scope responsibilities.

THE SCOPE OF WORK IS TO INCLUDE, but is not limited to, the following items:

1. Furnish and install all telescoping stands including all associated accessories for complete installation.
2. This contractor is responsible for field measurements and layout of their work.
3. This contractor is responsible to visit the site to determine the extent of the work required to provide a complete installation of the equipment. Include all necessary work in base bid.
4. Provide and install all support framing required to install telescoping stands. Only steel shown in plans will be provided and installed by 05000, steel contractor.
5. Caulk all products installed by this contractor where required for work of this work category.
6. Protection of adjacent work already in place is the responsibility of this contractor.
7. Provide daily clean-up, according to Barton Malow standards, including daily removal of all materials and debris related to this category. If daily clean-up is not performed, the Construction Manager will provide his labor to complete the clean-up and the appropriate contractor will be back-charged.
8. Final cleaning must be included within this bid. Performance of cleaning will be directed by BMC when appropriate and logical.

EXCLUDED FROM THIS CONTRACTOR'S WORK is:

1. **N/A**

SPECIAL CONSIDERATIONS:

1. All work under this scope shall comply with proper trade jurisdictions, even if it is necessary to assemble composite crews or subcontract to appropriate trades.

2. The special provisions outlined in **Section 00210 Description of the Work** form a part of this bid category work description and apply to this bidder's scope of work.

3. This Bidder is required to submit alternate prices identified in the Bidding Documents which pertain to their work. These alternate prices must be separate from their base bid on the Bid Proposal Form as described in Section 00200 Instructions to Bidders.

4. Take special precautions when working near occupied spaces with regards to fumes, noise and pollution levels. Some work may be necessary to be performed after the school day is over at this contractor expense.

5. Any in-place temporary protection that requires any disassembly to perform work, etc. must be replaced by contractor installing new work. Temporary protection must be restored to condition intended.

6. Section **00410, Familial Disclosure Statement, must** be filled out and included with your Bid for your Bid to be accepted.

END OF SECTION 00220 – TELESCOPING STANDS 12.1

SECTION 00220
WORK SCOPE

BID CATEGORY – Gym Equipment 12.2

The Work of this Bid Category includes but is not limited to providing all labor, equipment, materials, scaffolding, hoisting and incidentals to complete all in accordance with the Contract Documents and applicable codes. All Work is to be performed as shown on the plans and specified in the following technical Specification sections:

Section	Name
11490	Gymnasium Equipment

In addition to the above, this Bid Category requires adherence to but not limited to the Bidding Documents, the Bidding and Contract requirements and Division 1 General Requirements of the Project Manual and coordination with various other technical Specifications interfacing with this Work. The Bidder is advised to review the Work descriptions of the other Bid Categories as set forth in Section 00210 of the Project Manual so as to not misunderstand scope responsibilities.

THE SCOPE OF WORK IS TO INCLUDE, but is not limited to, the following items:

1. Furnish and install all gym equipment noted on plans and in specifications. Provide and install all blocking and support framing, anchoring necessary.

2. This contractor is responsible for field measurements and layout of their work.

3. This contractor is responsible to visit the site to determine the extent of the work required to provide a complete installation of the equipment. Include all necessary work in base bid.

4. Provide and install all support framing required to gym equipment. Only steel shown in plans will be provided and installed by 5.1 - Steel contractor.

5. Caulk all products installed by this contractor where required for work of this work category.

6. Protection of adjacent work already in place is the responsibility of this contractor.

7. Final cleaning must be included within this bid. Performance of cleaning will be directed by BMC when appropriate and logical.

EXCLUDED FROM THIS CONTRACTOR'S WORK is:

1. **N/A**

SPECIAL CONSIDERATIONS:

1. All work under this scope shall comply with proper trade jurisdictions, even if it is necessary to assemble composite crews or subcontract to appropriate trades.

2. The special provisions outlined in **Section 00210 Description of the Work** form a part of this bid category work description and apply to this bidder's scope of work.

3. This Bidder is required to submit alternate prices identified in the Bidding Documents which pertain to their work. These alternate prices must be separate from their base bid on the Bid Proposal Form as described in Section 00200 Instructions to Bidders.

4. Take special precautions when working near occupied spaces with regards to fumes, noise and pollution levels. Some work may be necessary to be performed after the school day is over at this contractor expense.

5. Any in-place temporary protection that requires any disassembly to perform work, etc. must be replaced by contractor installing new work. Temporary protection must be restored to condition intended.

6. Section **00410, Familial Disclosure Statement, must** be filled out and included with your Bid for your Bid to be accepted.

END OF SECTION 00220 – GYM EQUIPMENT 12.2

SECTION 00220
WORK SCOPE

BID CATEGORY - Mechanical 15.1

The Work of this Bid Category includes but is not limited to providing all labor, equipment, materials, scaffolding, hoisting and incidentals to complete all **mechanical, plumbing, fire protection, and other specified items** in accordance with the Contract Documents and applicable codes. All Work is to be performed as shown on the plans and specified in the following technical Specification sections:

Section	Name
01731	Cutting and Patching
01732	Selective Demolition
07210	Building Insulation
07841	Through-Penetration Firestop Systems
07920	Joint Sealants
08311	Access Doors and Frames
10801	Toilet and Bath Accessories
11400	Food Service Equipment
13915	Fire-Suppression Piping
All 15000	Mechanical (Except 15950)

In addition to the above, this Bid Category requires adherence to but not limited to the Bidding Documents, the Bidding and Contract requirements and Division 1 General Requirements of the Project Manual and coordination with various other technical Specifications interfacing with this Work. The Bidder is advised to review the Work descriptions of the other Bid Categories as set forth in Section 00210 of the Project Manual so as to not misunderstand scope responsibilities.

THE SCOPE OF WORK IS TO INCLUDE, but is not limited to, the following items:

1. Reference work scope assignments designated to the Architectural Demolition Notes, which can be found behind Project Manual section 00210 – Description of the Work/Special Provisions. These work scope assignments are to be included in your base bid.

2. Provide all layout and engineering associated with this work necessary to perform a complete job using established building lines, control points and elevations.

3. This contractor WILL provide continuous on-site supervision and a general foreman for all subcontractors on site.

4. Include mechanical, plumbing, fire protection and HVAC demolition as shown on plans. Salvaged items, cutting and capping lines is this contractor's responsibility. Capping lines in building units that will be connected to future lines, in adjacent units at different times, is the responsibility of this contractor.

5. Furnish all labor, tools, equipment, material and services necessary to install all mechanical systems complete.

6. Furnish and install all food service equipment indicated on drawings and specified in the specifications.

7. This contractor shall field verify all dimensions and furnish dimensional layout drawings and coordinated required roof openings and structural supports for the hood and any other rooftop equipment.

8. This contractor is to include additional fire suppression testing following building fire alarm system activation.

9. Furnish and install all required ductwork and fittings with the hood and exhaust.

10. Provide final adjustments and cleaning of equipment and provide Owner training with demonstrations to operate equipment.

11. It is this contractor's responsibility to hire a qualified roofing contractor to seal any new and/or abandoned roof penetrations that this contractor makes to the roof system. See roofing specifications for acceptable/qualified roofing manufacturers and installers.

12. Troy School District will furnish and install soap dispensers, paper towel holders and toilet paper holders and sanitary napkin disposal. Furnish other toilet and bath accessories as specified.

13. Furnish and install all louvers and vents complete, including blank-off panels and bird screens if shown on drawings. Layout openings for masonry and/or glazing contractor to cut openings, at least 2 weeks prior to block installation. Any layout not provided in this time frame may result in a back charge to the 15.1 – Mechanical contractor.

14. 15.1 - Mechanical will provide layout drawings for through wall penetrations of mechanical systems to 4.1 - Masonry at least two weeks prior to block installation in that unit. It is this contractor's responsibility to review CMU openings and provide documentation of a sign off sheet by both parties. Once this sheet is sent to BMC, 15.1 – Mechanical will assume all responsibility for openings.

15. Removal and replacement of existing diffusers and any other mechanical equipment necessary for the ceiling grid and tile replacement is the responsibility of this contractor.

16. The manufacturer for Variable Frequency Drives listed in Specification Section 15055 – Motors shall be ABB Drives, Inc. ONLY.

17. Furnish and install sleeves required for this contractor's work to concrete or site contractor where applicable.

18. Furnish mechanical sleeves necessary for your work, to be installed by 3.1 – Concrete contractor.

19. Include all saw cutting, excavation, backfill and concrete infill as indicated on mechanical and plumbing and HVAC drawings to install new mechanical systems. Remove concrete and spoils from site.

20. Include labor to readjust any such penetrations just prior to any activity that will permanently lock such rough-ins in place, i.e., roof sump pans.

21. Provide all concrete equipment pads required for mechanical equipment but not shown on the drawings.

22. Furnish equipment roof curbs to roofing contractor. Layout in field of these roof curbs to be completed by this contractor. This contractor will coordinate with the roofing contractor before any penetrations are made in the roofing system.

23. Furnish all new mechanical equipment, systems, and components as indicated on the drawings as required for complete systems.

24. This contractor is responsible to make all connections to tie-in all sanitary piping, domestic water, and roof drains up to 5'-0" outside of the building footprint.

25. The contractor's field superintendent shall be present during testing and field reviews conducted by inspection agencies.

26. Coordinate delivery, receive, unload, store and protect all mechanical equipment. Maintain insurance for equipment in transit, while stored on or off site until equipment is installed.

27. Provide all duct and pipe insulation AND labeling as shown and specified.

28. Furnish and layout piping boots in field for installation by roofing contractor.

29. Install duct smoke detectors provided by the electrical contractor.

30. Furnish and install fire dampers where ductwork penetrates rated wall assemblies. Ensure engineers drawings comply with life safety codes for rated walls.

31. It is this contractor's responsibility to install control valves, provided by 15.2 – Temperature and Lighting Controls contractor.

32. Provide variable frequency drives for installation by the electrical contractor.

33. This contractor shall factory install all DDC controls for specification section 15840 Air Terminal Units.

34. Provide all trouble shooting and diagnosis of malfunctioning mechanical systems.

35. Test all systems to assure complete installation and notify BMC when systems are ready for balancing contractor to perform adjusting and balancing.

36. Correct findings from balancing reports immediately following receipt of reports. The balancing contractor will verify compliance with report findings in a final review. Repeat visits, by the balancing contractor resulting from incomplete corrections shall be at the expense of the Mechanical contractor.

37. Contractor shall furnish and install temporary closures of openings created as a result of the work in this scope in exterior surfaces. Temporary closures MUST secure the building.

38. It is this contractor's responsibility to modify and/or relocate sprinkler head drops in new ceilings as required. Reference sheet FS1.1.

39. Provide protection of equipment. Damage to equipment due to lack of adequate protection will be the responsibility of this contractor.

40. All ductwork shall be kept clean and protected throughout construction. If necessary clean ductwork prior to testing, adjusting and balancing. Provide final cleaning, dusting and washing as needed of all materials, equipment, fixtures and systems installed and/or supplied under this work category. Coordinate the time of implementation with the Construction Manager.

41. Install weather and joint sealants for newly installed equipment. At floors, use backer rod to cover shims and seal.

42. Caulk all products installed by this contractor where required for work of this category.

43. Furnish and install all fire stopping necessary to seal penetrations related to mechanical system installations. Use UL approved products. Maintain indicated fire rating of walls, partitions, ceilings and floors at penetrations.

44. Provide all necessary barricades, safety and warning devices for this work.

45. Furnish access panels and layout locations to 6.1 - Carpentry and/or 4.1 -Masonry contractor. These panels may not be shown on drawings but are necessary for the end user to maintain and access this system.

46. Obtain and pay for all local, state and municipal permit and/or fees required for the execution of the work. On Plumbing Permit Application check Box 24, Certification Fee and include $10.00. **On Mechanical Permit Application check Box 36, Certificate Fee, and include $10.00. These certificates will be turned over to the construction manager with close out documents.**

47. Contractor of this work category shall locate and layout all elevations and locations of pipe or ductwork penetrations required by this category for shown locations. Penetrations required, but not shown, by this work category shall be approved by the Architect prior to installation. A qualified masonry contractor must perform penetrations through masonry that will be exposed to view. Costs for all penetrations required to complete the work of this category will be the responsibility of the Mechanical Contractor.

48. Cutting and welding operations shall cease 2 hours prior to the close of construction each day to minimize the risk of undetected smoldering fire. Contractors performing such operations shall have within their immediate work area, ABC-type fire extinguishers.

49. A walk through must be taken with the Construction Manager, Owner's Representative, Building Head Custodian prior to ceiling tile installation to locate all above ceiling valves. All valves must have location labeled below ceiling level. Documentation of this walk through must be given to Construction Manager in writing the day after the walk through takes place.

50. Complete as-built drawings on reproducibles as specified. Refer to Section 01330-5.03-E for costs associated with this item.

EXCLUDED FROM THIS CONTRACTOR'S WORK is:

1. N/A

SPECIAL CONSIDERATIONS:

1. All work under this scope shall comply with proper trade jurisdictions, even if it is necessary to assemble composite crews or subcontract to appropriate trades.

2. The special provisions outlined in **Section 00210 Description of the Work** form a part of this bid category work description and apply to this bidder's scope of work.

3. This Bidder is required to submit alternate prices identified in the Bidding Documents which pertain to their work. These alternate prices must be separate from their base bid on the Bid Proposal Form as described in Section 00200 Instructions to Bidders.

4. Take special precautions when working near occupied spaces with regards to fumes, noise and pollution levels. Some work may be necessary to be performed after the school day is over at this contractor expense.

5. Any in-place temporary protection that requires any disassembly to perform work, etc. must be replaced by contractor installing new work. Temporary protection must be restored to condition intended.

6. Section **00410, Familial Disclosure Statement, must** be filled out and included with your Bid for your Bid to be accepted.

7. This bidder is responsible to bring signed and notarized safety affidavit (Section **00430**) to post bid meeting with Barton Malow Company. Contractor can not be recommended for award without this document in hand.

END OF SECTION 00220 - MECHANICAL 15.1

SECTION 00220
WORK SCOPE

BID CATEGORY – Temperature and Lighting Controls 15.2

The Work of this Bid Category includes but is not limited to providing all labor, equipment, materials, scaffolding, hoisting and incidentals to complete all **temperature and lighting controls and sequence of operations as indicated in specifications, plans and by coordination with Owner** in accordance with the Contract Documents and applicable codes. All Work is to be performed as shown on the plans and specified in the following technical Specification sections:

Section	Name
01721	Cutting and Patching
01732	Selective Demolition
13845	Lighting Controls
15900	HVAC Instrumentation and Controls
15940	Sequence of Operations
All 15000	For Reference

In addition to the above, this Bid Category requires adherence to but not limited to the Bidding Documents, the Bidding and Contract requirements and Division 1 General Requirements of the Project Manual and coordination with various other technical Specifications interfacing with this Work. The Bidder is advised to review the Work descriptions of the other Bid Categories as set forth in Section 00210 of the Project Manual so as to not misunderstand scope responsibilities.

THE SCOPE OF WORK IS TO INCLUDE, but is not limited to, the following items:

1. Reference work scope assignments designated to the Architectural Demolition Notes, which can be found behind Project Manual section 00210 – Description of the Work/Special Provisions. These work scope assignments are to be included in your base bid.

2. Perform all layout as required to complete the work of this contract.

3. It shall be the responsibility of this contractor to thoroughly review the mechanical and electrical drawings divisions 15 and 16 specifications in their entirety, to coordinate components to be furnished and or installed to result in fully functioning systems.

4. This contractor shall, unless specifically noted otherwise, furnish and install all automatically operated valves, dampers, and motors.

5. Furnish hydronic instrument wells, valves and accessories. These items will be installed by 15.1 - Mechanical contractor.

6. Control valves are to be furnished by this contractor for installation by 15.1 – Mechanical contractor.

7. Provide lighting control panels (LCP) as specified in section 13845, to be installed by 16.1 – Electrical contractor.

8. Provide back boxes for low voltage switches, to be installed by 16.1 – Electrical contractor.

9. Provide and install low voltage lighting control devices directly connected to LCP as specified under section 13845, and shown on electrical drawings.

10. Provide all labor, tools, equipment, material and services necessary to install complete controls as indicated. Including but not limited to penetrations in floors and walls required for the installation of this work.

11. Provide input to trouble shoot and diagnose malfunctioning mechanical systems and sequence of operation of mechanical systems.

12. All work to be completed in accordance with the project schedule and so not to disturb any finished and rated material or surface.

13. Removal and replacement of ceiling tiles and grids necessary for the installation of this contractors scope are the responsibility of this contractor.

14. Provide and install all low voltage wiring devices and LCP's with regard to specification section 13845.

15. Cover and protect work as required or conditions warrant.

16. Obtain and pay for all local, state and municipal permit and/or fees required for the execution of the work.

17. Provide Owner with operational instruction as necessary to enable them to operate and maintain new systems controls. Provide signed documentation of instruction session, including date and attendees to BMC within 24hrs of each session. This is a required component for closeout.

18. Complete as-built drawings on reproducibles as specified. Refer to section 01330-5.03-E for costs associated with this item.

19. Broom clean areas at the end of each day's work.

20. Dispose of all unusable material in dumpster daily. Dumpsters will be provided y Barton Malow Company for unidentifiable debris only. It is the responsibility of each contractor to dispose of their own spoils off site.

21. Final cleaning of installed end user devices must be performed.

EXCLUDED FROM THIS CONTRACTOR'S WORK is:

N/A

SPECIAL CONSIDERATIONS:

1. All work under this scope shall comply with proper trade jurisdictions, even if it is necessary to assemble composite crews or subcontract to appropriate trades.

2. The special provisions outlined in **Section 00210 Description of the Work** form a part of this bid category work description and apply to this bidder's scope of work.

3. This Bidder is required to submit alternate prices identified in the Bidding Documents which pertain to their work. These alternate prices must be separate from their base bid on the Bid Proposal Form as described in Section 00200 Instructions to Bidders.

4. Take special precautions when working near occupied spaces with regards to fumes, noise and pollution levels. Some work may be necessary to be performed after the school day is over at this contractor expense.

5. Any in-place temporary protection that requires any disassembly to perform work, etc. must be replaced by contractor installing new work. Temporary protection must be restored to condition intended.

6. Section **00410, Familial Disclosure Statement, must** be filled out and included with your Bid for your Bid to be accepted.

7. This bidder is responsible to bring signed and notarized safety affidavit (Section **00430**) to post bid meeting with Barton Malow Company. Contractor can not be recommended for award without this document in hand.

END OF SECTION 00220 – TEMPERATURE AND LIGHTING CONTROLS 15.2

SECTION 00220
WORK SCOPE

BID CATEGORY – Mechanical Testing and Balancing 15.3

The Work of this Bid Category includes but is not limited to providing all labor, equipment, materials, scaffolding, hoisting and incidentals to complete all **mechanical, plumbing, fire protection, selective demolition and other specified items** in accordance with the Contract Documents and applicable codes. All Work is to be performed as shown on the plans and specified in the following technical Specification sections:

Section	Name
15950	Testing, Adjusting and Balancing
All 15000	Mechanical for reference

In addition to the above, this Bid Category requires adherence to but not limited to the Bidding Documents, the Bidding and Contract requirements and Division 1 General Requirements of the Project Manual and coordination with various other technical Specifications interfacing with this Work. The Bidder is advised to review the Work descriptions of the other Bid Categories as set forth in Section 00210 of the Project Manual so as to not misunderstand scope responsibilities.

THE SCOPE OF WORK IS TO INCLUDE, but is not limited to, the following items:

1. Coordination with other trades, including mandatory job meetings.
2. Coordinate onsite activities with Barton Malow Company superintendent and mechanical contractor.
3. Perform all activities defined in examination section of 15950 and furnish written report of findings.
4. Review all mechanical and electrical specification sections for balancing requirements and include all costs associated to comply with same.
5. Provide all labor, tools, equipment, material and services necessary to complete all adjusting and balancing specified. Provide (4) copies of Final Certified Balance Reports to BMC.
6. Removal and replacement of ceiling tiles and grids necessary for the installation of this contractors' scope are the responsibility of this contractor.
7. Include a follow up site inspection to verify that any non-compliance items identified in the Final Report have been corrected. Furnish amendment to Final Report documenting findings.
8. All work to be completed in accordance with project schedule.
9. Provide all necessary barricades, safety and warning devices for this work.
10. This contractor shall attend a walk through with the Construction Manager, Owner's Representative, and Building Head Custodian prior to ceiling tile installation to locate all above ceiling valves.

EXCLUDED FROM THIS CONTRACTOR'S WORK is:

1. **N/A**

SPECIAL CONSIDERATIONS:

1. All work under this scope shall comply with proper trade jurisdictions, even if it is necessary to assemble composite crews or subcontract to appropriate trades.

2. The special provisions outlined in **Section 00210 Description of the Work** form a part of this bid category work description and apply to this bidder's scope of work.

3. This Bidder is required to submit alternate prices identified in the Bidding Documents which pertain to their work. These alternate prices must be separate from their base bid on the Bid Proposal Form as described in Section 00200 Instructions to Bidders.

4. Take special precautions when working near occupied spaces with regards to fumes, noise and pollution levels. Some work may be necessary to be performed after the school day is over at this contractor expense.

5. Any in-place temporary protection that requires any disassembly to perform work, etc. must be replaced by contractor installing new work. Temporary protection must be restored to condition intended.

6. Section **00410, Familial Disclosure Statement, must** be filled out and included with your Bid for your Bid to be accepted.

7. This bidder is responsible to bring signed and notarized safety affidavit (Section **00430**) to post bid meeting with Barton Malow Company. Contractor can not be recommended for award without this document in hand.

END OF SECTION 00220 – MECHANICAL TESTING AND BALANCING 15.3

SECTION 00220
WORK SCOPE

BID CATEGORY – Electrical 16.1

The Work of this Bid Category includes but is not limited to providing all labor, equipment, materials, scaffolding, hoisting and incidentals to complete all **fire alarm, lighting protection, selective demolition and electrical systems and items specified** in accordance with the Contract Documents and applicable codes. All Work is to be performed as shown on the plans and specified in the following technical Specification sections:

Section	Name
01230	Alternate
01731	Cutting and Patching
01732	Selective Demolition
07841	Through-penetration Firestop Systems
07920	Joint Sealants
08311	Access Doors and Frames
13845	Lighting Controls
13851	Fire Alarm
15900	HVAC Instrumentation and controls
All 16000	Electrical

In addition to the above, this Bid Category requires adherence to but not limited to the Bidding Documents, the Bidding and Contract requirements and Division 1 General Requirements of the Project Manual and coordination with various other technical Specifications interfacing with this Work. The Bidder is advised to review the Work descriptions of the other Bid Categories as set forth in Section 00210 of the Project Manual so as to not misunderstand scope responsibilities.

THE SCOPE OF WORK IS TO INCLUDE, but is not limited to, the following items:

1. Reference work scope assignments designated to the Architectural Demolition Notes, which can be found behind Project Manual section 00210 – Description of the Work/Special Provisions. These work scope assignments are to be included in your base bid.

2. Perform all layouts as required to complete the work of this contract.

3. This contractor will disconnect and remove all existing electrical items and reinstall where necessary, as shown and required. Disconnect power to mechanical equipment to be removed by others. This contractor will connect all new electrical systems to existing systems and provide all new work on existing systems, as required. This contractor is responsible for protection of all existing electrical equipment and systems to remain.

4. Provide power to all mechanical equipment consistent with mechanical schedules and specifications from nearest panel unless noted otherwise.

5. Furnish electrical sleeves and provide layout, as necessary for your work, to be installed by the 3.1 – Concrete contractor.

6. Employ services of a registered surveyor to perform layout of all electrical work.

7. It is this contractor's responsibility to provide any and all electrical testing and inspections as listed in the electrical specifications.
8. Employ services of a reputable company to locate existing underground technology and power.
9. Complete demolition, cutting, capping, temporary service connections and/or return to service as indicated on the electrical demolition plans and notes. Turn over salvaged items as directed. Maintain and/or provide safe electrical systems while in a temporary status.
10. Sawcut, remove and dispose of concrete, asphalt and/or greenbelt required to install the work of this category. Patch and repair as necessary in these areas.
11. Furnish and install all labor and material to install all electrical site elements complete. Concrete pole bases are this contractor's responsibility. This contractor is responsible for the re-seeding of disturbed green belt areas due to this contractor's work.
12. Furnish all access panels required to service the electrical systems but which are not shown on the drawings to the carpentry contractor.
13. Protect all thru-wall, floor and ceiling penetrations against damage. Include cost to re-adjust such rough-ins just prior to secured in-place. Coordinate this adjustment with the appropriate contractor.
14. Blank all abandoned boxes.
15. The masonry, electrical and carpentry contractor will share the responsibility for a square / plumb installation of all electrical and technology boxes, any cost incurred to adjust boxes to ensure a quality finished product will be shared by these contractors.
16. Furnish all concrete equipment pads required for electrical equipment not shown on the drawings.
17. Install back boxes for the low voltage switches, to be provided by 15.2 – Temperature and Lighting Controls.
18. Supply power to all mechanical fire/smoke dampers, and any other dampers requiring power.
19. Coordinate delivery, receive, unload, store and protect all electrical equipment. Maintain insurance for equipment in transit, while stored on or off site until equipment in installed.
20. Coordinate electrical device locations with architectural elements, i.e. tack boards, casework and marker boards prior to installation of electrical boxes to avoid installation conflicts.
21. The contractor's field superintendent must be present during testing and field reviews conducted by inspection agencies.
22. All contactors must be labeled on the front of the box as to what they control. If located above ceilings the location must be noted below ceiling level.
23. A walk through with the Construction Manager, Owner Representative, and building head custodian must be done and documented prior to completion of the project to show the location of all above ceiling control devices.

24. All panel boxes must be labeled with permanent room numbers.

25. Provide and maintain all necessary barricades, safety and warning devices until work is safe and complete.

26. Provide and install all fire stopping and joint sealants necessary to seal penetrations related to electrical system installations. Use UL approved products. Maintain indicated fire rating of walls, partitions, ceilings and floors at penetrations.

27. Obtain and pay for all necessary state and local permits, fees and insurance to perform this work. **On Electrical Permit Application check box 30 Certificate Fee and include $10.00.** This certificate will be turned over to the construction manager with close out documents.

28. Submit fire alarm shop drawings to governing agencies for approval 6 weeks prior to scheduled installation.

29. The manufacturer for occupancy sensors listed in Specification Section 16145 – Lighting Control Devices shall be Leviton ONLY.

30. Provide and install all lighting and associated wiring indicated on the drawings and specified in Section 16145.

31. Complete as-built drawings on reproducibles as specified, Refer to Section 01330-5.03-E for costs associated with this item.

32. With regard to Specification Section 13845, install all light control contactors and LCP's provided by 15.2 (Lighting and Temperature Controls) contractor. All branch circuit relay switching and rough-ins for low voltage switches is the responsibility of this contractor.

33. Install only temperature sensors as specified in 15900. Include rough-in of temperature sensor device in this contractors work.

34. Provide and install all conduit rough-ins for wall mounted thermostats, sensors and lighting control switches as shown on mechanical and electrical drawings. Minimally, each rough-in should consist of a single gang switch box with ½" EMT turning out above finished ceiling on the same side of the wall as the equipment, which is served by the thermostat, sensor or switch. Coordinate this work with 15.3 – Temperature and Lighting Controls contractor as certain sensors or lighting control switches may require alternate rough-on requirements that are to be included in your base bid.

35. It is this contractor's responsibility to ensure that all occupancy sensors or power packs have auxiliary contacts needed for BMS systems, per details.

36. Dispose of all unusable material in dumpster daily. Dumpsters will be provided by BMC for unidentifiable debris only. It is the responsibility of each contractor to dispose of their own spoils off site.

37. Include an allowance of $200,000 to be used for low voltage remediation, to be used at Barton Malow's discretion. Any and all time tickets pertaining to this allowance are to be signed by

Barton Malow and submitted on a daily basis. No time tickets will be accepted unendorsed. Allowance when billed shall be exclusive of mar-ups and fees. Include these costs in your base bid.

EXCLUDED FROM THIS CONTRACTOR'S WORK is:

1. **N/A**

SPECIAL CONSIDERATIONS:

1. All work under this scope shall comply with proper trade jurisdictions, even if it is necessary to assemble composite crews or subcontract to appropriate trades.

2. The special provisions outlined in **Section 00210 Description of the Work** form a part of this bid category work description and apply to this bidder's scope of work.

3. This Bidder is required to submit alternate prices identified in the Bidding Documents which pertain to their work. These alternate prices must be separate from their base bid on the Bid Proposal Form as described in Section 00200 Instructions to Bidders.

4. Take special precautions when working near occupied spaces with regards to fumes, noise and pollution levels. Some work may be necessary to be performed after the school day is over at this contractor expense.

5. Any in-place temporary protection that requires any disassembly to perform work, etc. must be replaced by contractor installing new work. Temporary protection must be restored to condition intended.

6. Section **00410, Familial Disclosure Statement, must** be filled out and included with your Bid for your Bid to be accepted.

7. This bidder is responsible to bring signed and notarized safety affidavit (Section **00430**) to post bid meeting with Barton Malow Company. Contractor can not be recommended for award without this document in hand.

END OF SECTION 00220 - ELECTRICAL 16.1

SECTION 00230
SCHEDULE AND PHASING

PART 1 - GENERAL

1.01 RELATED DOCUMENTS

A. Attention is directed to Bidding and Contract Requirements, and to Division 1, General Requirements, which are hereby made a part of this Section.

1.02 MILESTONE SCHEDULE

A. The following are the milestone schedule dates for the listed work and will become a part of the Contract Documents. Each contractor is responsible to review the supplementary General Conditions for additional requirements. The master construction schedule will be developed after award of the Agreement with Contractor input.

MILESTONE ACTIVITIES	SCHEDULED START	SCHEDULED COMPLETION
Receive Bids	December 19, 2006	-
Issuance of Contracts (tentatively)	January 16, 2007	-
Smith Computer Lab and Office Additions	April 6, **2007**	December 3, **2007**
Smith Renovations	June 25, **2007**	August 31, **2007**
Boulan Park & Larson Renovation Work – **Units 200, 300 and 300a**	June 25, **2007**	August 29, **2007**
Smith Existing office remodel	December 21, **2007**	February 25, **2008**
Boulan Park & Larson Renovation Work – **Units 100, 100a and 200a**	June 23, **2008**	August 22, **2008**

Close coordination will be required between all construction trades in order that individual areas of renovation and new construction can be completed within the scheduled time. Consult the proposed construction sequence and renovation sequence schedules and key plans found in Part 2 for start and completion dates of individual Work areas.

B. It is expressly agreed that time is of the essence for the completion of Work under the Agreement and **Contractor** agrees to perform the Work within the allotted time and in the manner specified. **Contractor** shall be liable for any and all damages and expenses suffered by the Owner or Barton Malow Company arising or resulting from the failure of **Contractor** to perform the Work in accordance with the construction schedule.

1.03 CONSTRUCTION SCHEDULE DEVELOPMENT PROCESS

A. **Contractor** agrees to commence Work in the field within five (5) Days after being notified to do so by the Barton Malow Company. **Contractor** shall diligently perform and fully complete all Work to the satisfaction of Barton Malow Company and Owner.

Work shall begin at such points as Barton Malow Company may designate and shall be carried to completion with the utmost speed.

B. **Contractor** shall submit to Barton Malow Company **within fifteen (15) Days of award of the Agreement a Bar Chart/CPM construction schedule using all necessary scheduling information using Barton Malow Company specified coding** of all activities contained in the **Contractor's** scope of Work. This schedule shall include activity descriptions and durations in working days, for shop drawings, fabrication, delivery and installation of products, materials and equipment. This schedule shall identify precedent relationships between **Contractor's** activities and those of other **contractors**, the dollar value, necessary manpower loadings, and precedent activities for other **contractors**. The activities on the

schedule must be at a level of detail approved by Barton Malow Company and should agree with the terminology and building sequencing established by Barton Malow Company.

C. Barton Malow Company will compile all **Contractors'** schedules and develop a project master construction schedule. Once the individual **Contractors** schedules are agreed upon by Barton Malow Company, this project master construction schedule will become the project plan for construction.

D. Special requirements and/or sequencing issues should be brought to the attention of Barton Malow Company. It is intended the milestones remain in effect and all Bidders agree to accept the milestone dates. Barton Malow Company reserves the right to revise the project master construction schedule as deemed necessary.

E. Barton Malow Company shall periodically update the project master construction schedule and display it at the Project site. Contractor shall familiarize itself with the project master construction schedule and how it will affect or modify its operations, including coordination with the activities of other **contractors**. Reasonable changes in sequencing, durations and phasing are to be expected with each master schedule update. These changes will be made by **Contractor** at no additional cost.

F. If it is apparent **Contractor** is unable to perform its Work in the sequence indicated or the time allotted, **Contractor** must notify Barton Malow Company within five (5) Days after initial publication of the project master construction schedule. **Contractors** schedule of activities may be re-sequenced, and the schedule may be adjusted, provided all Work is completed within the stated milestone dates and provided Barton Malow Company and affected **contractors** are notified of the change within five (5) calendar days of receipt of the schedule and the change does not otherwise negatively impact the other scheduled work; otherwise, the project master construction schedule shall be deemed accepted by all parties and becomes a contractual requirement for each **Contractor**.

G. If **Contractor** delays progress for any reason other than those delays specifically excused under the Contract Documents, Contractor will take all necessary steps to expedite its Work to maintain milestone target dates at no expense or additional cost to Owner or Barton Malow Company.

H. If **Contractor** is behind schedule and is so notified by Barton Malow Company, **Contractor** shall be required to accelerate the Work at its own expense. **Contractor** shall furnish to Barton Malow Company a short interval schedule of its Work showing location, number of men and crew required to get back on the agreed upon master construction schedule. If **Contractor** fails to maintain and meet the short interval schedule, **Barton Malow Company** reserves the right to take whatever steps it deems necessary in its sole discretion to recover the schedule at the **Contractor**'s expense. The **Contractor** shall employ such means as overtime work, multiple work shifts, and additional equipment, all without additional compensation, and shall continue to do so until the progress of the Work, in the opinion of Barton Malow Company, is in conformance with the master project construction schedule.

I. **Contractor** agrees that it shall have no claim against the Owner, Architect, or Barton Malow Company for an increase in the contract price nor for a payment or allowance of any kind for damage, loss, or expense arising or resulting from delays, regardless of whether the delay is the basis for an extension of time. This provision includes claims for damage, loss, or expense arising or resulting from interruptions to, or necessary suspension of, **Contractor**'s Work to enable other **contractors** to perform their work.

END OF SECTION 00230

Act ID	Description	Orig Dur	Early Start	Early Finish
SiteWork				
1000	Install Temp Construction Fencing	3	25JUN07 *	27JUN07
1005	Install SEC measures	2	28JUN07	29JUN07
1010	Demolish Existing Drop off Loop	8	02JUL07	12JUL07
1020	Install New Underground Drainage Piping	8	13JUL07	24JUL07
1030	Install New Curb, Asphalt, restore greenbelt	15	25JUL07	14AUG07
1040	Sweep new surface & stripe	3	15AUG07	17AUG07
Renovation 2007				
1051	Ductwork shop dwg approval & fabrication	91	16FEB07 *	22JUN07
1052	Lighting shop dwg approval & delivery	91	16FEB07 *	22JUN07
1053	Owner Pack/Vacate Units 300a, 300, 200	5	18JUN07 *	22JUN07
1060	Contractors Mobilize for Demolition	0	25JUN07 *	
1070	Demo/Remove - Unit 300a	5	25JUN07	29JUN07
1080	Demo/Remove - Unit 300	5	27JUN07	03JUL07
1090	Demo/Remove - Unit 200	5	29JUN07	06JUL07
1100	Unit 300a: Install new Ductwork	10	02JUL07	16JUL07
1110	Unit 300a:Adjust Sprink pipe/install new heads	3	09JUL07	11JUL07
1120	Unit 300a:Install new Grid	5	12JUL07	18JUL07
1130	Unit 300a: Install new Lighting	7	19JUL07	27JUL07
1140	Unit 300a:Install new Diffusers	3	30JUL07	01AUG07
1145	Unit 300a:Install new ACT	5	30JUL07	03AUG07
1155	Unit 300a:Work Completion List/OWNER TURNOVER	5	06AUG07	10AUG07
1165	Unit 300: Install new Ductwork	10	05JUL07	18JUL07
1175	Unit 300: Adjust Sprink pipe/install new heads	3	11JUL07	13JUL07
1185	Unit 300: Install new Grid	5	16JUL07	20JUL07
1195	Unit 300: Install new Lighting	7	23JUL07	31JUL07
1205	Unit 300: Install new Diffusers	3	01AUG07	03AUG07
1215	Unit 300: Install new ACT	5	06AUG07	10AUG07
1225	Unit 300:Work Completion List/OWNER TURNOVER	5	13AUG07	17AUG07
1235	Unit 200: Install new Ductwork	10	09JUL07	20JUL07
1245	Unit 200: Adjust Sprink pipe/install new heads	3	13JUL07	17JUL07
1255	Unit 200: Install new Grid	5	18JUL07	24JUL07
1265	Unit 200: Install new Lighting	7	25JUL07	02AUG07
1275	Unit 200: Install Diffusers	3	03AUG07	07AUG07
1285	Unit 200: Install new ACT	5	08AUG07	14AUG07
1295	Unit 200: Work Completion List/OWNER TURNOVER	5	15AUG07	21AUG07
1305	INSPS: Final Elec, OFS, Temp CofO	6	22AUG07	29AUG07

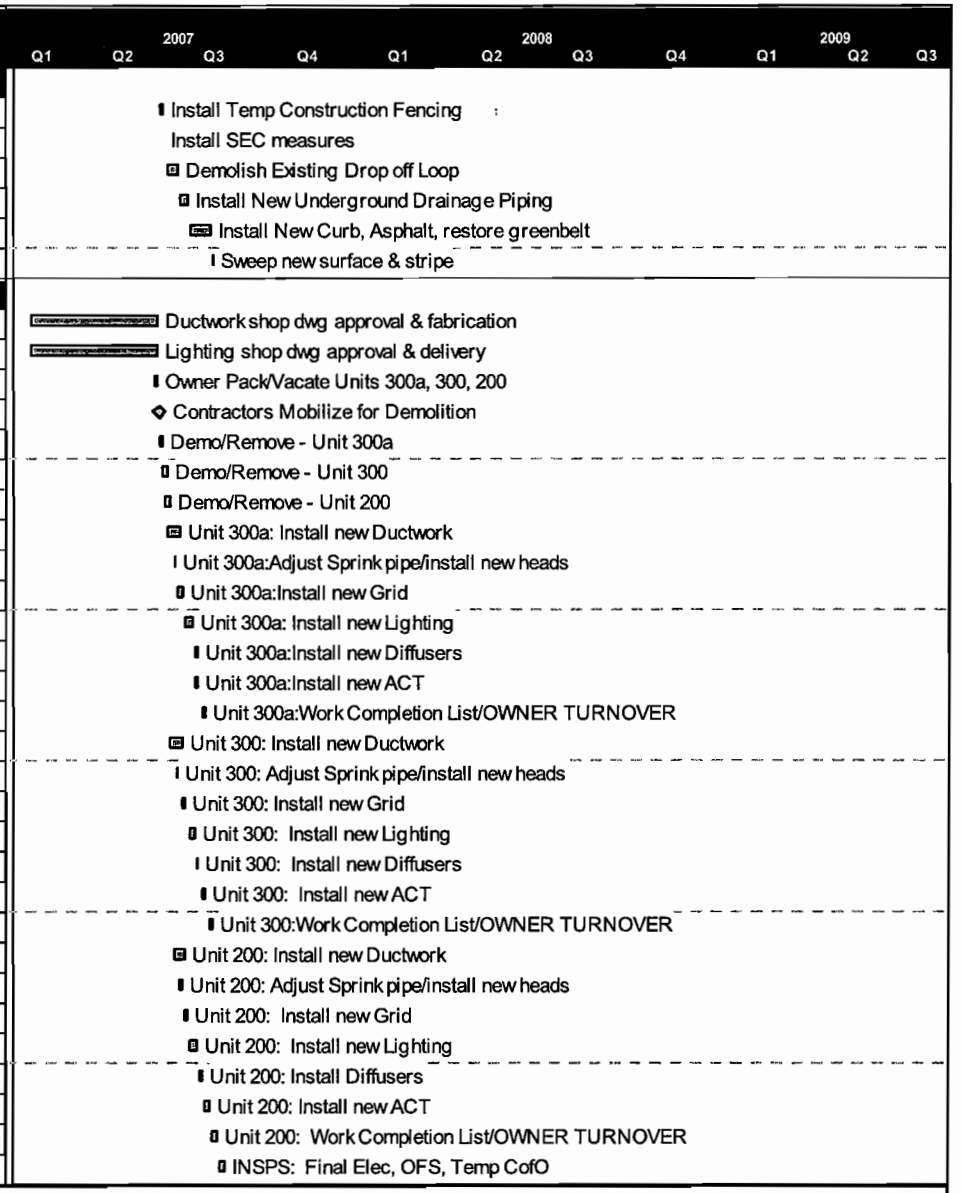

Start date	29JAN07
Finish date	22AUG08
Data date	29JAN07
Run date	14NOV06
Page number	1A

© Primavera Systems, Inc.

Barton Malow Company
Boulan Park Middle School

Early bar
Progress bar
Critical bar
Summary bar
Start milestone point
Finish milestone point

Act ID	Description	Orig Dur	Early Start	Early Finish
Renovation 2008				
1315	Owner Pack/Vacate units 200a, 100, 100a	5	16JUN08 *	20JUN08
1325	Contractors Mobilize for Demolition	0	23JUN08	
1335	Demo/Remove - Unit 200a	5	23JUN08	27JUN08
1345	Demo/Remove - Unit 100	5	25JUN08	01JUL08
1355	Demo/Remove Unit 100a	5	27JUN08	03JUL08
1365	Unit 200a: Install new Ductwork	10	30JUN08	14JUL08
1375	Unit 200a: Adjust Sprink pipe/install new heads	3	07JUL08	09JUL08
1385	Unit 200a: Install Grid	5	10JUL08	16JUL08
1395	Unit 200a: Install Lighting	7	17JUL08	25JUL08
1405	Unit 200a: Install Diffusers	3	28JUL08	30JUL08
1415	Unit 200a: Install ACT	5	31JUL08	06AUG08
1425	Unit 200a: Work Completion List/OWNER TURNOVER	5	07AUG08	13AUG08
1435	Unit 100: Install new Ductwork	10	02JUL08	16JUL08
1445	Unit 100: Adjust Sprink pipe/install new heads	3	09JUL08	11JUL08
1455	Unit 100: Install Grid	5	14JUL08	18JUL08
1465	Unit 100: Install Lighting	7	21JUL08	29JUL08
1475	Unit 100: Install Diffusers	3	30JUL08	01AUG08
1485	Unit 100: Install ACT	5	04AUG08	08AUG08
1495	Unit 100: Work Completion List/OWNER TURNOVER	5	11AUG08	15AUG08
1505	Unit 100a: Install new Ductwork	10	07JUL08	18JUL08
1515	Unit 100a: Adjust Sprink pipe/install new heads	3	11JUL08	15JUL08
1525	Unit 100a: Install Grid	5	16JUL08	22JUL08
1535	Unti 100a: Install Lighting	7	23JUL08	31JUL08
1545	Unit 100a: Install Diffusers	3	29JUL08	31JUL08
1555	Unit 100a: Install ACT	5	01AUG08	07AUG08
1565	Unit 100a: Work Completion List/OWNER TURNOVER	5	08AUG08	14AUG08
1575	INSPS: Final Elec, OFS, Final CofO	6	15AUG08	22AUG08

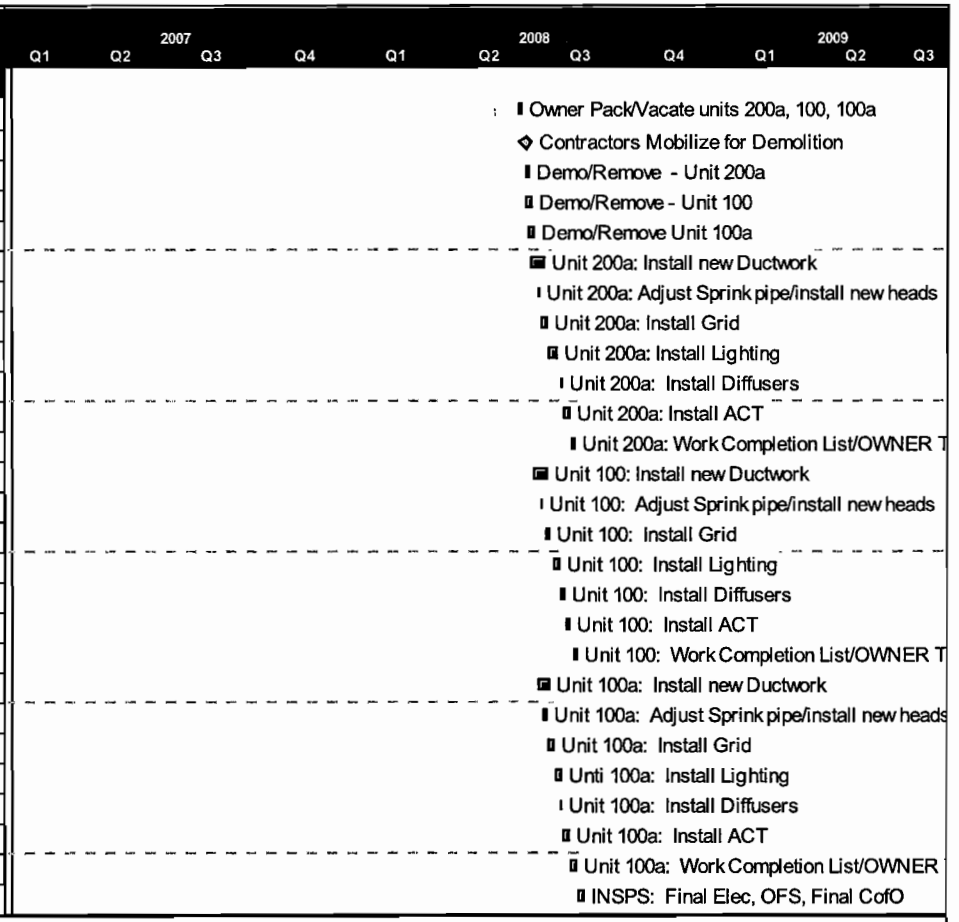

Start date	29JAN07
Finish date	22AUG08
Data date	29JAN07
Run date	14NOV06
Page number	2A

© Primavera Systems, Inc.

Barton Malow Company
Boulan Park Middle School

Early bar
Progress bar
Critical bar
Summary bar
Start milestone point
Finish milestone point

Act ID	Description	Orig Dur	Early Start	Early Finish
Renovation 2007				
1051	Ductwork shop dwg approval & fabrication	91	16FEB07 *	22JUN07
1052	Lighting shop dwg approval & delivery	91	16FEB07 *	22JUN07
1053	Owner Pack/Vacate Units 300a, 300, 200	5	18JUN07 *	22JUN07
1060	Contractors Mobilize for Demolition	0	25JUN07 *	
1070	Demo/Remove - Unit 300a	5	25JUN07	29JUN07
1080	Demo/Remove - Unit 300	5	27JUN07	03JUL07
1090	Demo/Remove - Unit 200	5	29JUN07	06JUL07
1100	Unit 300a: Install new Ductwork	10	02JUL07	16JUL07
1110	Unit 300a:Adjust Sprink pipe/install new heads	3	09JUL07	11JUL07
1120	Unit 300a:Install new Grid	5	12JUL07	18JUL07
1130	Unit 300a: Install new Lighting	7	19JUL07	27JUL07
1140	Unit 300a:Install new Diffusers	3	30JUL07	01AUG07
1145	Unit 300a:Install new ACT	5	30JUL07	03AUG07
1155	Unit 300a:Work Completion List/OWNER TURNOVER	5	06AUG07	10AUG07
1165	Unit 300: Install new Ductwork	10	05JUL07	18JUL07
1175	Unit 300: Adjust Sprink pipe/install new heads	3	11JUL07	13JUL07
1185	Unit 300: Install new Grid	5	16JUL07	20JUL07
1195	Unit 300: Install new Lighting	7	23JUL07	31JUL07
1205	Unit 300: Install new Diffusers	3	01AUG07	03AUG07
1215	Unit 300: Install new ACT	5	06AUG07	10AUG07
1225	Unit 300:Work Completion List/OWNER TURNOVER	5	13AUG07	17AUG07
1235	Unit 200: Install new Ductwork	10	09JUL07	20JUL07
1245	Unit 200: Adjust Sprink pipe/install new heads	3	13JUL07	17JUL07
1255	Unit 200: Install new Grid	5	18JUL07	24JUL07
1265	Unit 200: Install new Lighting	7	25JUL07	02AUG07
1275	Unit 200: Install Diffusers	3	03AUG07	07AUG07
1285	Unit 200: Install new ACT	5	08AUG07	14AUG07
1295	Unit 200: Work Completion List/OWNER TURNOVER	5	15AUG07	21AUG07
1305	INSPS: Final Elec, OFS, Temp CofO	6	22AUG07	29AUG07
Renovation 2008				
1315	Owner Pack/Vacate units 200a, 100, 100a	5	16JUN08 *	20JUN08
1325	Contractors Mobilize for Demolition	0	23JUN08	
1335	Demo/Remove - Unit 200a	5	23JUN08	27JUN08
1345	Demo/Remove - Unit 100	5	25JUN08	01JUL08
1355	Demo/Remove Unit 100a	5	27JUN08	03JUL08
1365	Unit 200a: Install new Ductwork	10	30JUN08	14JUL08

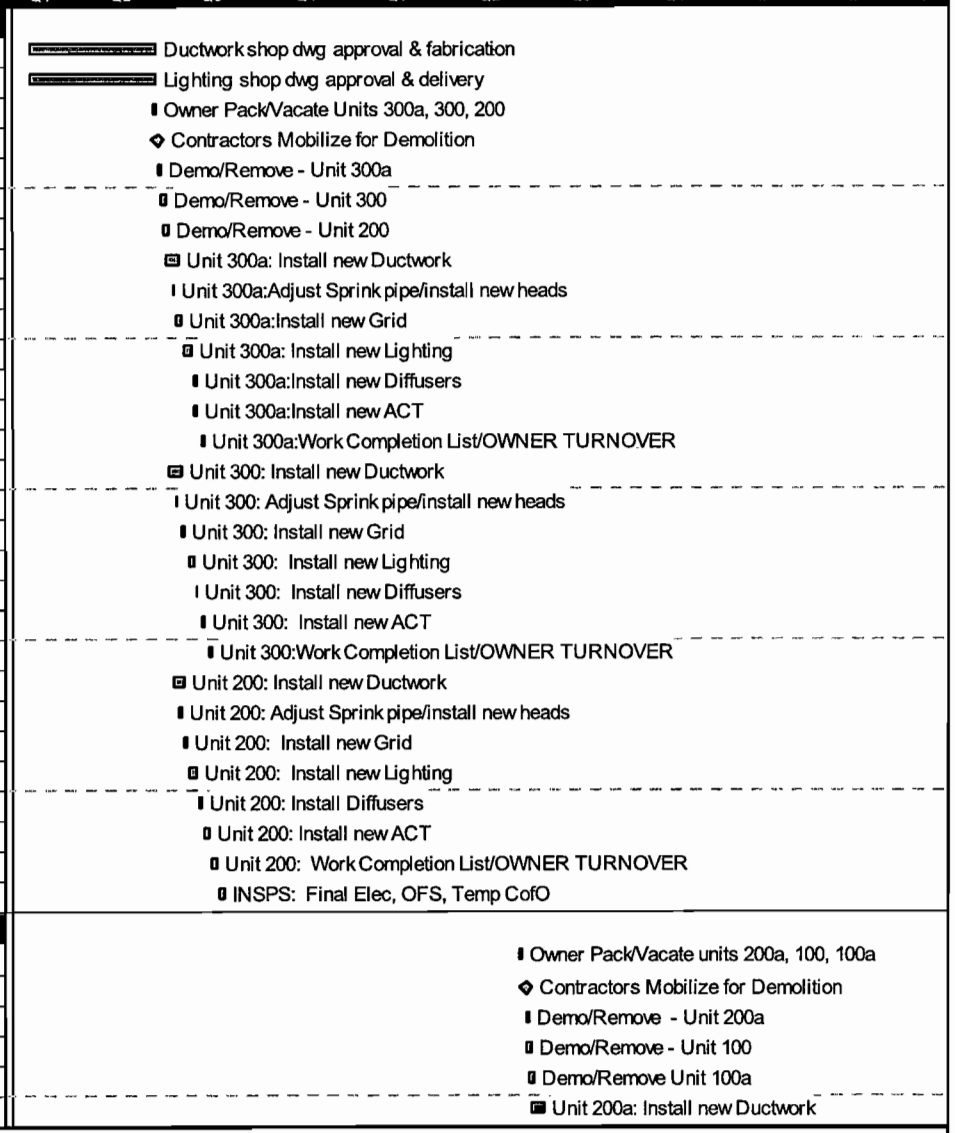

Start date	29JAN07
Finish date	22AUG08
Data date	29JAN07
Run date	14NOV06
Page number	1A

© Primavera Systems, Inc.

Barton Malow Company
Larson Middle School

Early bar
Progress bar
Critical bar
Summary bar
Start milestone point
Finish milestone point

Act ID	Description	Orig Dur	Early Start	Early Finish
1375	Unit 200a: Adjust Sprink pipe/install new heads	3	07JUL08	09JUL08
1385	Unit 200a: Install Grid	5	10JUL08	16JUL08
1395	Unit 200a: Install Lighting	7	17JUL08	25JUL08
1405	Unit 200a: Install Diffusers	3	28JUL08	30JUL08
1415	Unit 200a: Install ACT	5	31JUL08	06AUG08
1425	Unit 200a: Work Completion List/OWNER TURNOVER	5	07AUG08	13AUG08
1435	Unit 100: Install new Ductwork	10	02JUL08	16JUL08
1445	Unit 100: Adjust Sprink pipe/install new heads	3	09JUL08	11JUL08
1455	Unit 100: Install Grid	5	14JUL08	18JUL08
1465	Unit 100: Install Lighting	7	21JUL08	29JUL08
1475	Unit 100: Install Diffusers	3	30JUL08	01AUG08
1485	Unit 100: Install ACT	5	04AUG08	08AUG08
1495	Unit 100: Work Completion List/OWNER TURNOVER	5	11AUG08	15AUG08
1505	Unit 100a: Install new Ductwork	10	07JUL08	18JUL08
1515	Unit 100a: Adjust Sprink pipe/install new heads	3	11JUL08	15JUL08
1525	Unit 100a: Install Grid	5	16JUL08	22JUL08
1535	Unti 100a: Install Lighting	7	23JUL08	31JUL08
1545	Unit 100a: Install Diffusers	3	29JUL08	31JUL08
1555	Unit 100a: Install ACT	5	01AUG08	07AUG08
1565	Unit 100a: Work Completion List/OWNER TURNOVER	5	08AUG08	14AUG08
1575	INSPS: Final Elec, OFS, Final CofO	6	15AUG08	22AUG08

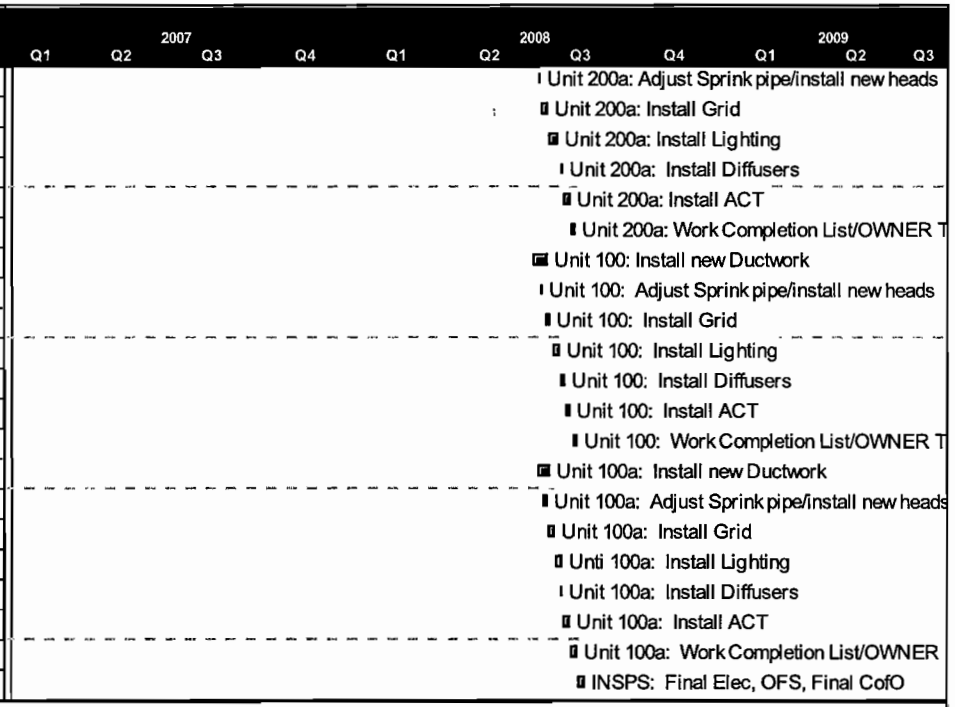

Start date	29JAN07
Finish date	22AUG08
Data date	29JAN07
Run date	14NOV06
Page number	2A
© Primavera Systems, Inc.	

Barton Malow Company
Larson Middle School

- Early bar
- Progress bar
- Critical bar
- Summary bar
- Start milestone point
- Finish milestone point

SECTION 00400
BID PROPOSAL FORM
(Submit in Triplicate)

DATE: _____

TO: **Troy School District**
4400 Livernois Road
Troy, MI. 48098

PROJECT: **Phase I–Three Middle Schools**
Remodeling & Addition
Bid Package No. 9361

Attn: **Barton Malow Company**
1301 Boyd
Troy, MI 48083
Call 248-823-4631, with any questions

Architect: **Kingscott Associates, Inc.**

FROM:

Name of Bidder: _____

Business Address: _____

_____

Phone Number: _____

Fax Number: _____

Bid Proposal for Category(ies): _____

Bidder, in compliance with the **Advertisement to Bid** for construction contemplated for **Bid Package No. 9361 Phase I – Three Middle Schools Remodeling & Addition** having carefully examined the Bidding Documents and the site of the proposed Project and the conditions affecting the proposed Work in the Bid Category(ies) including the condition of the Project site, any surface or subsurface obstruction, the actual levels, all excavating, filling in, removal and demolition, measurements and quantities involved in the Work, the availability of labor, materials and equipment, and the weather conditions that may possibly may be experienced in the Project vicinity, proposes to furnish all labor, materials, tools, equipment, machinery, equipment rental, transportation, superintendence, and services as are necessary to perform all Work in the Bid Category(ies) stated in accordance with the Contract Documents for the Base Bid and Alternate amounts stated below.

If identified as one of the apparent lowest responsive, responsible bidder(s) for a Bid Category Bidder agrees to meet immediately with the Barton Malow Company and shall submit post bid information as described in Section 00200 Instructions to Bidders.

Bidder, if awarded a contract, agrees to: (1) execute the Agreement within fifteen (15) days of receiving notice of the award; (2) provide performance/payment bonds and insurance certificates in full compliance with the Contract Documents, (3) submit the Project Safety Program as described in Section 00200 Instructions to Bidders; (4) commence Work upon execution of the Agreement or at such other time as directed in the notice of award, and (5) to complete its Work in accordance with the Contract Documents and within the milestone activity dates and durations set

forth in the Bidding Documents and subsequent construction project master schedule established by Barton Malow Company.

In the event Bidder defaults in complying with any portion of this paragraph, Bidder specifically agrees that the entire bid security amount shall become the property of **Troy School District** as liquidated damages constituting the reasonable estimate of the damages that Troy School District would incur for delays and additional expenses in the event of such default, and not as a penalty.

BASE BID: Bidder agrees to perform all Work for Bid Category(ies) as described in the Contract Documents, for the Base Bid(s) stated below. The Base Bid(s) shall include the cost of Performance and Payment Bonds. For each Bid Category to be bid, include the Base Bid, written and in figures, the cost of the Performance Bond and Payment Bond which is included in the Base Bid, written and in figures, and the Bid Category and description. The cost of the Performance Bond and Payment Bond shall be treated as a deduct Alternate should the Owner and Barton Malow Company decide to waive the requirement for the successful Bidder providing same.

(Show amounts in both words and figures. In case of discrepancy, amount shown in words will govern).

BASE BID MUST INCLUDE BID AMOUNTS FOR ALL OF PHASE I MIDDLE SCHOOLS. BIDS THAT DO NOT INCLUDE A PRICE FOR ALL WORK WILL NOT BE ACCEPTED.

BID CATEGORY	WRITTEN DESCRIPTION/AMOUNT(S)	BID AMOUNT IN FIGURES
1. Bid Category No. _____		
Base Bid (including bond)	_____ DOLLARS	$ _____
Amount included for bond	_____ DOLLARS	$ _____

COMBINED BID: Bidder agrees to perform all Work necessary to complete the Work in Bid Categories _____, _____, _____, in full accordance with the Contract Documents, for the lump sum of:

COMBINED BID AMOUNT	WRITTEN DESCRIPTION AMOUNT(S)	BID AMOUNT IN FIGURES
Base Bid (including bond)	_____ DOLLARS	$ _____
Amount included for bond	_____ DOLLARS	$ _____

ALTERNATES: The following Alternate(s) to Base Bid(s) are required to be offered by the respective bidders. **Further description of these alternates can be found in Kingscott Specification Section 01230 Alternate.** In the event the Alternate is accepted, Bidder agrees to perform all Work necessary to complete the Work as modified by the Alternate in full accordance with the Contract Documents, for the following add or deduct from the Base Bid as indicated: (Show amount(s) in both words and figures for Alternates. In case of discrepancy, amount shown in words will govern.)

ALTERNATES:

B-E1 (Boulan Park MS)

BID CATEGORY	WRITTEN DESCRIPTION OF ALTERNATE AMOUNT(S)	ADD	DEDUCT
16.1		$	$

For the amount of: _____ DOLLARS

B-E2 (Boulan Park MS)

BID CATEGORY	WRITTEN DESCRIPTION OF ALTERNATE AMOUNT(S)	ADD	DEDUCT
16.1		$	$

For the amount of: _____ DOLLARS

L-E1 (Larson MS)

BID CATEGORY	WRITTEN DESCRIPTION OF ALTERNATE AMOUNT(S)	ADD	DEDUCT
16.1		$	$

For the amount of: _____ DOLLARS

L-E2 (Larson MS)

BID CATEGORY	WRITTEN DESCRIPTION OF ALTERNATE AMOUNT(S)	ADD	DEDUCT
16.1		$	$

For the amount of: _____ DOLLARS

S-1 (Smith MS)

BID CATEGORY	WRITTEN DESCRIPTION OF ALTERNATE AMOUNT(S)	ADD	DEDUCT
6.1		$	$

For the amount of: _____ DOLLARS

S-E1 (Smith MS)

BID CATEGORY	WRITTEN DESCRIPTION OF ALTERNATE AMOUNT(S)	ADD	DEDUCT
16.1		$	$

For the amount of: _____ DOLLARS

S-E2 (Smith MS)

BID CATEGORY	WRITTEN DESCRIPTION OF ALTERNATE AMOUNT(S)	ADD	DEDUCT
16.1		$	$

For the amount of: _____ DOLLARS

S-E3 (Smith MS)

BID CATEGORY	WRITTEN DESCRIPTION OF ALTERNATE AMOUNT(S)	ADD	DEDUCT
16.1		$	$

For the amount of: _____ DOLLARS

S-E4 (Smith MS)

BID CATEGORY	WRITTEN DESCRIPTION OF ALTERNATE AMOUNT(S)	ADD	DEDUCT
16.1		$	$

For the amount of: _____ DOLLARS

S-E5 (Smith MS)

BID CATEGORY	WRITTEN DESCRIPTION OF ALTERNATE AMOUNT(S)	ADD	DEDUCT
16.1		$	$

For the amount of: _____ DOLLARS

VOLUNTARY ALTERNATES: The following Voluntary Alternates are offered by the Bidder. Bidder agrees that the amounts indicated below shall be added to or deducted from the Base Bid, as indicated, for each voluntary Alternate that is accepted.

(Show amount(s) in both words and figures for voluntary alternates. In case of discrepancy, amount shown in words will govern.)

BID CATEGORY	WRITTEN DESCRIPTION OF VOLUNTARY ALTERNATE AMOUNT(S)	ADD	DEDUCT
1.		$	$

For the amount of: _____ DOLLARS

2.		$	$

For the amount of: _____ DOLLARS

3.		$	$

For the amount of: _____ DOLLARS

UNIT PRICES: The following Unit Prices to Base Bid Categories are required to be offered by the respective Bidders. Bidder agrees that the following amounts will be used in determining contract changes from the Base Bid for authorized Changes in the Work. Bidder shall not include these unit costs in the Base Bid amount(s). **[All unit prices shall include Bidder's mark-up for overhead and profit.]**

	BID CATEGORY CODE	DESCRIPTION OF UNIT PRICE	UNIT PRICE ADD	UNIT PRICE DEDUCT
1.	2.1	21 AA Limestone cu. yd.	$	$
2.	2.1	Topsoil cu. yd.	$	$
3.	2.1	Sand cu. yd.	$	$
4.	2.1	Sidewalk lineal ft. (5 x 5)	$	$
5.	2.1	Asphalt	$	$
6.	3.1	Concrete 3000 PSI cu. yd.	$	$
7.	6.1	Replace 2 x 2 ceiling tile (only)	$	$
8.	6.1	Replace ceiling grid (only)	$	$
9.	9.3	Rubber base installation	$	$

All applicable taxes and bond costs are included in the above Base Bid and all listed Alternates and Unit Prices.

Bid Security in the form of a bid bond from a qualified surety ( ), certified check ( ), or cashier's check ( ), (check one) accompanies this proposal in the amount of five (5) percent of the Base Bid amount(s). Bidder agrees that this Bid Proposal shall be irrevocable for a period of **ninety (90)** days after the day and time designated for receipt of the Bid Proposal in Section 00100 of the Project Manual.

As of the date of submission of the Bid Proposal, Bidder's worker's compensation Experience Modification Rate (EMR) for the state in which the Work is to be performed is _____._____. Bidder has attached to the Bid Proposal form the following (3) forms:

1.) OSHA Form 300 indicating recordable incidence rates for the last calendar year per 200,000 man-hours for the following categories:

1) Total Cases _____
2) Lost Workday Cases _____
3) Non-fatal Cases Without Lost Workdays _____
4) Employee Hours Worked Last Year _____
5) Fatalities in the last year (if yes describe below)

_____
_____
_____

2.) Affidavit of Bidder (Familial Relationship Disclosure) Form located in section 00410, and
3.) Affidavit of Bidder (Compliance with School Safety Initiative Legislation) Form

Has Bidder been cited by state of federal OSHA for any serious or willful violation? If yes, please describe:

Bidder understands that **Troy School District** reserves the right to reject any or all Bid Proposals and to waive any informalities or irregularities therein.

Bidder acknowledges receipt of the following Addenda (identify no. and date of each): _____

Bidder acknowledges receipt of the pre-bid conference minutes dated _____

If awarded a contract, Bidder's surety will be _____.

Check

☐ I have included a fully executed and notarized copy of the familial disclosure form set forth in Section 00410 of this Project Manual with my Bid Proposal.

Bidder accepts the provisions of the Bidding and Contract Documents and certifies that this Bid Proposal is submitted in good faith and without collusion with any other person or entity submitting a Bid Proposal for the Work. If Bidder is required to be licensed in the state where the work is performed add "Bidder certifies that it meets all licensing requirements of the state in which work is to be performed, its current license number and classification are as follows:_____". Bidder hereby affixes its authorized signature(s) representing (check one):

_____ An individual doing business as _____
_____ A partnership
_____ A limited liability company, organized in _____ (enter state)
_____ A corporation, organized in _____ (enter state)
_____ Joint venture formed between _____ and _____
(Signature from authorized representatives of each partner are required)

Signature(s): _____ Title: _____

_____ Title: _____

Name of firm: _____

Business address: _____

_____

Telephone no.: ( ) _____

END OF SECTION 00400

SECTION 00410
FAMILIAL RELATIONSHIP DISCLOSURE FORM
AFFIDAVIT OF BIDDER

All Bidders must complete the following familial disclosure form in compliance with MCL 380.1267 and attach this information to the Bid Proposal.

The undersigned, the owner or authorized officer of _____ (the "Bidder"), pursuant to the familial disclosure requirement provided in the Advertisement for Bid, Section 00100 of the Project Manual, hereby represents and warrants, except as provided below, that no familial relationships exist between the Owner(s) or any employee of _____ and any member of the Board of Education of the School District or the Superintendent of the School District.

List and describe any Familial Relationships:

_____

_____

_____

BIDDER:

_____

By: _____

Its: _____

STATE OF MICHIGAN

COUNTY OF _____

Subscribed and sworn to before me on the _____ day of _____ 2005, by

_____.

_____
Notary Public

_____ County, Michigan

My Commission Expires _____

Acting in County of _____

END OF SECTION 00410

SECTION 00430
BID FORM SUPPLEMENTS

The following bid form supplements are required with your bid form for all Troy School District Projects.

1. **AFFIDAVIT OF BIDDER (COMPLIANCE WITH SCHOOL SAFETY INITIATIVE)**
   - **A.** Attached directly behind section 00430.

END OF SECTION 00430

AFFIDAVIT OF BIDDER

(COMPLIANCE WITH SCHOOL SAFETY INITIATIVE LEGISLATION)

The undersigned, the owner or authorized officer of _____ (the "Bidder"), certifies to _____(the "School District") that any and all persons who will work directly or indirectly for the Bidder, including, but not limited to, Bidder's employees, agents, vendors, subcontractors or consultants, and who will work at or on any School District property, have been fingerprinted, have provided criminal background checks from the State Police and FBI and have not been convicted of any "listed offenses."[1]

Additionally, the Bidder warrants and represents to the School District that he/she shall at all times be in compliance with MCL 380.1230, 380.1230a, 380.1230c, 380.1230d and 380.1230g. The Bidder further warrants and represents that all persons who will work directly or indirectly for the Bidder, including, but not limited to, Bidder's employees, agents, vendors, subcontractors or consultants, and who will work at or on any School District property, shall at all times be in compliance with MCL 380.1230, 380.1230a, 380.1230c, 380.1230d and 380.1230g. In this regard, Bidder agrees, without limitation, to report within 3 business days to the School District when any such person is charged with a crime listed in Section 1535a(1) of the Revised School Code[2] or a substantially similar law, and to immediately report to the School District if that person is subsequently convicted, plead guilty or plead no contest to that crime.

BIDDER:

_____

By: _____

Its: _____

STATE OF MICHIGAN)
)ss.
COUNTY OF _____)

This instrument was acknowledged before me on the _____ day of _____, 2006, by _____.

_____

, Notary Public

_____ County, Michigan

My Commission Expires:_____

Acting in the County of : _____

[1] The term listed offenses means those defined in section 2 of the Sex Offenders Registration Act (SORA), MCL 28.722.

[2] MCL 380.1535a(1).

SECTION 00500
AGREEMENT FORM

PART 1 - GENERAL

1.01 RELATED DOCUMENTS

A. Attention is directed to Division 0, Bidding and Contract Requirements, and to Division 1, General Requirements, which are hereby made a part of this Section.

B. Specific attention is directed to the requirements described in Section 00700 General Conditions of the Contract and Section 00800 Supplementary General Conditions.

1.02 AGREEMENT FORM

A. The form of Agreement that will be used for Work under this Bid Package shall be **AIA 101/CMa** Document - 1992 Edition.

1. The above Agreement Form is **"included immediately behind this section"**

2. Comments:

- Refer to section 00880 Regulatory Requirements for tax requirements.
- Refer to Section 01290 Payment procedures for payment process

END OF SECTION 00500

DRAFT AIA® Document A101/CMa™ - 1992

Standard Form of Agreement Between Owner and Contractor
where the basis of payment is a STIPULATED SUM

AGREEMENT
made as of the [ ] day of [ ] in the year of
(In words, indicate day, month and year)

BETWEEN the Owner:
(Name and address)

Troy School District
4400 Livernois
Troy, MI 48098

and the Contractor:
(Name and address)

For the following Project:
(Include detailed description of Project, location, address and scope.)

Phase I - Three Middle Schools Remodeling & Addition
Boulan Park Middle School 3570 Northfield Parkway, Troy, MI 480084
Larson Middle School 2222 East Long Lake Road, Troy, MI 48098
Smith Middle School 5835 Donaldson, Troy, MI 48098

See Project Manual, Section 00210, Description of Work

The Construction Manager is:
(Name and address)

Barton Malow Company
1301 Boyd
Troy, MI 48083

The Architect is:
(Name and address)

Kingscott Architecture, Engineering, Interiors Design
229 East Michigan, Suite #335
Kalamazoo, Michigan 49007

The Owner and Contractor agree as set forth below.

ADDITIONS AND DELETIONS: The author of this document has added information needed for its completion. The author may also have revised the text of the original AIA standard form. An *Additions and Deletions Report* that notes added information as well as revisions to the standard form text is available from the author and should be reviewed.

This document has important legal consequences. Consultation with an attorney is encouraged with respect to its completion or modification.

The 1992 Edition of AIA Document A201/CMa, General Conditions of the Contract for Construction, Construction Manager-Advisor Edition, is adopted in this document by reference. Do not use with other general conditions unless this document is modified.

Formatted: Font: Bold

ELECTRONIC COPYING of any portion of this AIA® Document to another electronic file is prohibited and constitutes a violation of copyright laws as set forth in the footer of this document.

AIA Document A101/CMa™ - 1992. Copyright © 1992 by The American Institute of Architects. All rights reserved. WARNING: This AIA® Document is protected by U.S. Copyright Law and International Treaties. Unauthorized reproduction or distribution of this AIA® Document, or any portion of it, may result in severe civil and criminal penalties, and will be prosecuted to the maximum extent possible under the law. This draft was produced by AIA software at 14:32:43 on 11/16/2006 under Order No.1000224973_1 which expires on 3/1/2007, and is not for resale.
User Notes: (3752328071)

ARTICLE 1 THE CONTRACT DOCUMENTS

The Contract Documents consist of this Agreement, Conditions of the Contract (General, Supplementary and other Conditions), Drawings, Specifications, Addenda issued prior to execution of this Agreement, other documents listed in this Agreement and Modifications issued after execution of this Agreement; these form the Contract, and are as fully a part of the Contract as if attached to this Agreement or repeated herein. The Contract represents the entire and integrated agreement between the parties hereto and supersedes prior negotiations, representations or agreements, either written or oral. An enumeration of the Contract Documents, other than Modifications, appears in Article 9.

ARTICLE 2 THE WORK OF THIS CONTRACT

The Contractor shall execute the entire Work described in the Contract Documents, except to the extent specifically indicated in the Contract Documents to be the responsibility of others, or as follows:

ARTICLE 3 DATE OF COMMENCEMENT AND SUBSTANTIAL COMPLETION

§ 3.1 The date of commencement is the date from which the Contract Time of Section 3.2 is measured, and shall be the date of this Agreement, as first written above, unless a different date is stated below or provision is made for the date to be fixed in a notice to proceed issued by the Owner.

(Insert the date of commencement, if it differs from the date of this Agreement or, if applicable, state that the date will be fixed in a notice to proceed.)

Unless the date of commencement is established by a notice to proceed issued by the Owner, the Contractor shall notify the Owner, through the Construction Manager, in writing not less than five days before commencing the Work to permit the timely filing of mortgages, mechanic's liens and other security interests.

§ 3.2 The Contractor shall achieve Substantial Completion of the entire Work not later than ( ) days after the Date of Commencement.

(Insert the calendar date or number of calendar days after the date of commencement. Also insert any requirements for earlier Substantial Completion of certain portions of the Work, if not stated elsewhere in the Contract Documents.)

Portion of Work	Substantial Completion date

, subject to adjustments of this Contract Time as provided in the Contract Documents.

(Insert provisions, if any, for liquidated damages relating to failure to complete on time.)

ARTICLE 4 CONTRACT SUM

§ 4.1 The Owner shall pay the Contractor in current funds for the Contractor's performance of the Contract the Contract Sum of ($), subject to additions and deductions as provided in the Contract Documents.

§ 4.2 The Contract Sum is based upon the following alternates, if any, which are described in the Contract Documents and are hereby accepted by the Owner:

(State the numbers or other identification of accepted alternates. If decisions on other alternates are to be made by the Owner subsequent to the execution of this Agreement, attach a schedule of such other alternates showing the amount for each and the date until which that amount is valid.)

§ 4.3 Unit prices, if any, are as follows:

AIA Document A101/CMa™ - 1992. Copyright © 1992 by The American Institute of Architects. All rights reserved. WARNING: This AIA® Document is protected by U.S. Copyright Law and International Treaties. Unauthorized reproduction or distribution of this AIA® Document, or any portion of it, may result in severe civil and criminal penalties, and will be prosecuted to the maximum extent possible under the law. This draft was produced by AIA software at 14:32:43 on 11/16/2006 under Order No.1000224973_1 which expires on 3/1/2007, and is not for resale.
User Notes: (3752328071)

Description	Units	Price ($ 0.00)

ARTICLE 5 PROGRESS PAYMENTS

§ 5.1 Based upon Applications for Payment submitted by the Contractor to the Construction Manager, and upon Project Applications and Certificates for Payment issued by the Construction Manager and Architect, the Owner shall make progress payments on account of the Contract Sum to the Contractor as provided below and elsewhere in the Contract Documents.

§ 5.2 The period covered by each Application for Payment shall be one calendar month ending on the last day of the month, or as follows:

§ 5.3 Provided an Application for Payment is submitted to the Construction Manager not later than the day of a month, the Owner shall make payment to the Contractor not later than the day of the same month. If an Application for Payment is received by the Construction Manager after the application date fixed above, payment shall be made by the Owner not later than ( ) days after the Construction Manager receives the Application for Payment.

§ 5.4 Each Application for Payment shall be based upon the Schedule of Values submitted by the Contractor in accordance with the Contract Documents. The Schedule of Values shall allocate the entire Contract Sum among the various portions of the Work and be prepared in such form and supported by such data to substantiate its accuracy as the Construction Manager or Architect may require. This schedule, unless objected to by the Construction Manager or Architect, shall be used as a basis for reviewing the Contractor's Applications for Payment.

§ 5.5 Applications for Payment shall indicate the percentage of completion of each portion of the Work as of the end of the period covered by the Application for Payment.

§ 5.6 Subject to the provisions of the Contract Documents, the amount of each progress payment shall be computed as follows:

§ 5.6.1 Take that portion of the Contract Sum properly allocable to completed Work as determined by multiplying the percentage completion of each portion of the Work by the share of the total Contract Sum allocated to that portion of the Work in the Schedule of Values, less retainage of ( ). Pending final determination of cost to the Owner of changes in the Work, amounts not in dispute may be included as provided in Section 7.3.7 of the General Conditions;

§ 5.6.2 Add that portion of the Contract Sum properly allocable to materials and equipment delivered and suitably stored at the site for subsequent incorporation in the completed construction (or, if approved in advance by the Owner, suitably stored off the site at a location agreed upon in writing), less retainage of ( );

§ 5.6.3 Subtract the aggregate of previous payments made by the Owner; and

§ 5.6.4 Subtract amounts, if any, for which the Construction Manager or Architect has withheld or nullified a Certificate for Payment as provided in Section 9.5 of the General Conditions.

§ 5.7 The progress payment amount determined in accordance with Section 5.6 shall be further modified under the following circumstances:

§ 5.7.1 Add, upon Substantial Completion of the Work, a sum sufficient to increase the total payments to ( ) of the Contract Sum, less such amounts as the Construction Manager recommends and the Architect determines for incomplete Work and unsettled claims; and

§ 5.7.2 Add, if final completion of the Work is thereafter materially delayed through no fault of the Contractor, any additional amounts payable in accordance with Section 9.10.3 of the General Conditions.

AIA Document A101/CMa™ - 1992. Copyright © 1992 by The American Institute of Architects. All rights reserved. WARNING: This AIA® Document is protected by U.S. Copyright Law and International Treaties. Unauthorized reproduction or distribution of this AIA® Document, or any portion of it, may result in severe civil and criminal penalties, and will be prosecuted to the maximum extent possible under the law. This draft was produced by AIA software at 14:32:43 on 11/16/2006 under Order No.1000224973_1 which expires on 3/1/2007, and is not for resale.
User Notes: (3752328071)

§ 5.8 Reduction or limitation of retainage, if any, shall be as follows:
(If it is intended, prior to Substantial Completion of the entire Work, to reduce or limit the retainage resulting from the percentages inserted in Sections 5.6.1 and 5.6.2 above, and this is not explained elsewhere in the Contract Documents, insert here provisions for such reduction or limitation.)

ARTICLE 6 FINAL PAYMENT
Final payment, constituting the entire unpaid balance of the Contract Sum, shall be made by the Owner to the Contractor when (1) the Contract has been fully performed by the Contractor except for the Contractor's responsibility to correct nonconforming Work as provided in Section 12.2.2 of the General Conditions and to satisfy other requirements, if any, which necessarily survive final payment; and (2) a final Project Certificate for Payment has been issued by the Construction Manager and Architect; such final payment shall be made by the Owner not more than 30 days after the issuance of the final Project Certificate for Payment, or as follows:

ARTICLE 7 MISCELLANEOUS PROVISIONS
§ 7.1 Where reference is made in this Agreement to a provision of the General Conditions or another Contract Document, the reference refers to that provision as amended or supplemented by other provisions of the Contract Documents.

§ 7.2 Payments due and unpaid under the Contract shall bear interest from the date payment is due at the rate stated below, or in the absence thereof, at the legal rate prevailing from time to time at the place where the Project is located.
(Insert rate of interest agreed upon, if any.)

( ) per annum

(Usury laws and requirements under the Federal Truth in Lending Act, similar state and local consumer credit laws and other regulations at the Owner's and Contractor's principal places of business, the location of the Project and elsewhere may affect the validity of this provision. Legal advice should be obtained with respect to deletions or modifications, and also regarding requirements such as written disclosures or waivers.)

§ 7.3 Temporary facilities and services:
(Here insert temporary facilities and services which are different from or in addition to those included elsewhere in the Contract Documents.)

§ 7.4 Other Provisions:
(Here list any special provisions affecting the Contract.)

ARTICLE 8 TERMINATION OR SUSPENSION
§ 8.1 The Contract may be terminated by the Owner or the Contractor as provided in Article 14 of the General Conditions.

§ 8.2 The Work may be suspended by the Owner as provided in Article 14 of the General Conditions.

ARTICLE 9 ENUMERATION OF CONTRACT DOCUMENTS
§ 9.1 The Contract Documents, except for Modifications issued after execution of this Agreement, are enumerated as follows:

AIA Document A101/CMa™ – 1992. Copyright © 1992 by The American Institute of Architects. All rights reserved. WARNING: This AIA® Document is protected by U.S. Copyright Law and International Treaties. Unauthorized reproduction or distribution of this AIA® Document, or any portion of it, may result in severe civil and criminal penalties, and will be prosecuted to the maximum extent possible under the law. This draft was produced by AIA software at 14:32:43 on 11/16/2006 under Order No.1000224973_1 which expires on 3/1/2007, and is not for resale.
User Notes: (3752328071)

§ 9.1.1 The Agreement is this executed Standard Form of Agreement Between Owner and Contractor, AIA Document A101/CMa, 1992 Construction Manager-Adviser Edition.

§ 9.1.2 The General Conditions are the General Conditions of the Contract for Construction, AIA Document A201/CMa, 1992 Construction Manager-Adviser Edition.

§ 9.1.3 The Supplementary and other Conditions of the Contract are those contained in the Project Manual dated , and are as follows:

Document	Title	Pages

§ 9.1.4 The Specifications are those contained in the Project Manual dated as in Section 9.1.3, and are as follows:
(Either list the Specifications here or refer to an exhibit attached to this Agreement.)

Title of Specifications exhibit:

§ 9.1.5 The Drawings are as follows, and are dated unless a different date is shown below:
(Either list the Drawings here or refer to an exhibit attached to this Agreement.)

Title of Drawings exhibit:

§ 9.1.6 The Addenda, if any, are as follows:

Number	Date	Pages

Portions of Addenda relating to bidding requirements are not part of the Contract Documents unless the bidding requirements are also enumerated in this Article 9.

§ 9.1.7 Other documents, if any, forming part of the Contract Documents are as follows:
(List here any additional documents which are intended to form part of the Contract Documents. The General Conditions provide that bidding requirements such as advertisement or invitation to bid, Instructions to Bidders, sample forms and the Contractor's bid are not part of the Contract Documents unless enumerated in this Agreement. They should be listed here only if intended to be part of the Contract Documents.)

This Agreement is entered into as of the day and year first written above and is executed in at least four original copies of which one is to be delivered to the Contractor, one each to the Construction Manager and Architect for use in the administration of the Contract, and the remainder to the Owner.

OWNER	CONTRACTOR
(Signature)	*(Signature)*
Michael A. Adamczyk, Superintendent, Business Services	
(Printed name and title)	*(Printed name and title)*

AIA Document A101/CMa™ - 1992. Copyright © 1992 by The American Institute of Architects. All rights reserved. WARNING: This AIA® Document is protected by U.S. Copyright Law and International Treaties. Unauthorized reproduction or distribution of this AIA® Document, or any portion of it, may result in severe civil and criminal penalties, and will be prosecuted to the maximum extent possible under the law. This draft was produced by AIA software at 14:32:43 on 11/16/2006 under Order No.1000224973_1 which expires on 3/1/2007, and is not for resale.
User Notes: (3752328071)

SECTION 00610
BONDS

PART 1 - GENERAL

1.01 RELATED DOCUMENTS

A. Attention is directed to Bidding and Contract Requirements, and to Division 1, General Requirements, which are hereby made a part of this Section.

B. Specific attention is directed to the requirements described in Section 00200 Instructions to Bidders regarding preparing a Bid Security to be delivered at time of bid.

PART 2 - BOND REQUIREMENTS

2.01 PERFORMANCE BONDS AND PAYMENT BONDS

A. Troy School District will, require Contractor to furnish a Performance Bond and a Payment Bond, in amounts equal to the Agreement price, by a qualified surety naming both the Owner and Barton Malow as Obligees. All sureties providing bonds on this Project must be listed in the Department of Treasury's Circular 570, entitled "Companies Holding Certificates of Authority as Acceptable Sureties on Federal Bonds and as Acceptable Reinsuring Companies" with the bond amounts less than or equal to the underwriting limitation indicated in the Circular, and/or must have an A.M. Best rating of A - or better. Bonds shall be duly executed by the Contractor, as principal, and by a surety that is licensed in the state in which the Work is to be performed.

B. The Contractor shall deliver the required bonds to Barton Malow Company prior to execution of the Agreement. If the Work is to be commenced prior thereto in response to a letter of intent, the Bidder, at a minimum, shall submit evidence to the satisfaction of Barton Malow Company that such bonds will be furnished prior to commencement of on site Work. In no event may the Contractor commence on-site Work without the required bonds properly issued and delivered.

C. Performance Bond and Payment Bond form AIA Document A312 (1984 Edition) must be used for this Project.

D. The Bidder's proposed surety must be acceptable to the Owner and Barton Malow Company. If, at any time, after acceptance of the **Contractor's** bonds, the surety fails to meet the criteria stated in Paragraph 2.01A. above, the **Contractor** must, as a precondition to continuing Work and receiving further payments, replace the bonds with bonds from a surety that meets the stated criteria.

E. The Performance and Payment Bond penal sums (i.e. the Agreement price) must be listed as a separate line item in the schedule of values described in Section 01290 Payment Procedures in the Project Manual.

F. In the event of a Change Order to the Agreement that increases the Agreement price, the penal sum of any required Performance and Payment Bonds shall also be increased so that each penal sum equals the adjusted Agreement price, or such other percentage of the Agreement price listed in the Project Manual - Section 00200 –Instructions to Bidders. Barton Malow Company or Owner shall have the right to request submission of bond riders, issued by the original qualified surety, evidencing that such increase to the penal sum of the bonds has been accomplished. Notwithstanding the foregoing, in the next pay application after the Agreement price has been increased by twenty-five percent (25%) or more, as a condition precedent to payment, Contractor shall deliver a bond rider issued by the original qualified surety evidencing that the appropriate increase in penal sums has been accomplished. See Project Manual Section 01290 – Payment Procedures.

END OF SECTION 00610

SECTION 00620
INSURANCE

PART 1 - GENERAL

1.01 RELATED DOCUMENTS

A. Attention is directed to Bidding and Contract Requirements, and to Division 1, General Requirements, which are hereby made a part of this Section.

B. A sample of the Certificate of Insurance (ACORD) form is in Section 01600 Forms.

1.02 STANDARD INSURANCE REQUIREMENTS

1. Barton Malow Company Contractor Insurance Requirements for Agency Work, PRO 15.14, shall govern this Project. A copy of these Insurance Requirements is attached in this Section, immediately following this page.

BARTON MALOW COMPANY
CONTRACTOR
INSURANCE REQUIREMENTS
For agency work

1. As a condition of performing work under the Agreement, Contractor will keep in force, at all times during performance of the Work, policies of insurance covering all Basic Insurance Requirements and any applicable Supplemental Insurance Requirements. The requirements identified below are minimum requirements. If the Agreement or other Contract Documents impose additional or higher standards, Contractor shall meet those as well. Where a Controlled Insurance Program ("CIP") is specified in the Contract Documents, these insurance requirements shall not apply to coverages supplied by the CIP, but shall apply to coverages which Contractor is required to carry outside the scope of the CIP.
2. Basic Insurance Requirements
   2.1. Workers' Compensation covering Contractor's statutory obligations in the State(s) in which the Work is to be performed or Federal statutory obligations, if applicable to the Project, and Employers' Liability insurance with limits of liability of $1,000,000 per accident. Where applicable, a US Longshore and Harborworker's Compensation Act endorsement must be included.
      2.1.1. If Contractor employs the services of leased employees for the Work or for a portion of the Work, it will be required to submit evidence, to the satisfaction of Barton Malow Company, that such leased employees are fully covered by the minimum limits of Workers' Compensation and Employers' Liability Insurance. Such evidence shall include, but not be limited to, submission of the applicable leasing agreement.
   2.2. Automobile Liability insurance with the limit of $1,000,000 per accident covering Contractor's owned, non-owned and hired automobiles.
   2.3. Commercial General Liability insurance written on the 1988 ISO OCCURRENCE policy form or subsequent versions with limits of liability as follows:

General Aggregate	$2,000,000
Products-Completed Operations Aggregate	$2,000,000
Personal/Advertising Injury	$2,000,000
Each Occurrence	$2,000,000

   This coverage shall include coverage for premises-operations, independent contractors' protective, products and completed operations, personal injury and broad form property damage (including coverage for explosion, collapse, and underground hazards), and Contractual Liability protection with respect to Contractor's indemnification obligations under the Contract Documents. Products-completed operations coverage must be maintained for at least two years after final completion of the Project.
3. Supplemental Insurance Requirements
   3.1. Watercraft Protection and Indemnity Liability insurance if any of the Work is on or over navigable waterways or involves use of any vessel. Limits are to be approved by Barton Malow Company in writing.
   3.2. Aircraft Liability insurance if any aircraft is used in performance of the Work. Limits are to be approved by Barton Malow Company in writing.
   3.3. Railroad Protective Liability insurance if any of the Work is on or within 50 feet of any railroad or affects railroad property, including but not limited to tracks, bridges, tunnels, and switches. Limits are to be approved by Barton Malow Company in writing.
   3.4. Professional Liability insurance, if Professional Services are provided, with limits of liability as follows:

Each Claim	$5,000,000
Aggregate	$5,000,000

   Contractor shall keep such Professional Liability insurance in force during the Agreement, and for three years after final completion of the Project.
   3.5. Pollution Liability insurance, which must be on an occurrence basis, if Environmental Services are provided. "Environmental Services" means any abatement, removal, remediation, transporting, or disposal of a Hazardous Material, or any assessments or consulting relating to same. Limits of liability for Pollution Liability insurance shall be as follows:

Each Occurrence	$5,000,000
Aggregate	$5,000,000

4. General Provisions.
   4.1. Every policy must be written by an insurance company licensed in the state where work is being done and is reasonably acceptable to Barton Malow Company and Owner.
   4.2 Limits for Employer's Liability, Commercial General Liability and Automobile Liability may be attained by a combination of an underlying policy with an umbrella or excess liability policy.
   4.3. "Barton Malow Company," Owner, and all other entities as required in the Contract Documents shall be endorsed as additional insureds on Contractor's liability insurance (including general liability, excess liability, automobile liability and pollution liability, where applicable) with respect to liability arising out of activities performed by

or on behalf of Contractor, including Barton Malow Company's general supervision of Contractor, products and completed operations of Contractor, and automobiles owned, leased, hired or borrowed by Contractor. The coverage provided by the additional insured endorsement shall be at least as broad as the Insurance Service Office, Inc.'s Additional Insured, Form B CG 20 10 11 85 or CG 20 26 11 85. Forms that do not provide additional insured status for completed operations will not be accepted.

4.4. Contractor will furnish, before any work is started, certificates of insurance showing the required coverages. Receipt by Barton Malow Company of a non-conforming certificate of insurance without objection, or Barton Malow Company's failure to collect a certificate of insurance, shall not waive or alter Contractor's duty to comply with the insurance requirements. Modifications to these insurance requirements will not be effective unless made in a writing executed by an authorized representative of Barton Malow Company. Upon written request by Barton Malow Company, Contractor will provide copies of its insurance policies.

4.5. Evidence of the required insurance is to be provided to Barton Malow Company on ACORD Certificate Form 25-S and must indicate:

4.5.1. Any coverage exclusions or deviations from the 1988 ISO commercial general liability form or subsequent versions;

4.5.2. A Best's rating for each insurance carrier at A minus VII or better;

4.5.3. That the issuing insurance company will provide thirty (30) days written notice of cancellation to the certificate holder and the words "endeavor to" and "but failure to mail such notice shall impose no obligation or liability of any kind upon the company, its agents or representatives" do not apply or have been removed;

4.5.4. That additional insured endorsements have been provided as required under the Contract Documents; and

4.5.5. Any deductibles over $10,000 applicable to any coverage.

4.6. All coverage must be primary and not excess over or contributory with any other valid, applicable, and collectible insurance in force for Barton Malow Company, Owner, or other additional insureds.

4.7. Contractor will provide full coverage for all of Contractor's equipment, property and tools used in the Work.

4.8. Contractor shall waive, and shall require (by endorsement or otherwise) its insurers providing the coverage required by these insurance requirements to waive, subrogation rights against Barton Malow Company, Owner, and all other additional insureds for losses and damages incurred and/or paid under the insurance policies required by these insurance requirements or other insurance applicable to Contractor or its Subordinate Parties, and will include this same requirement in contracts with its Subordinate Parties. If the policies of insurance referred to in this paragraph require an endorsement to provide for continued coverage where there is a waiver of subrogation, the owners of such policies will cause them to be so endorsed.

4.9. Contractor will send or fax a copy of these insurance requirements to its agent when an insurance certificate is requested to assure that the policies comply with the insurance requirements.

4.10. If Contractor requires its Subordinate Parties to provide additional insured endorsements in favor of Contractor, those endorsements shall be extended to Barton Malow Company, Owner and all other required additional insureds.

4.11. Contractor's duty to provide the insurance coverage set forth in these insurance requirements is a severable obligation from Contractor's indemnification obligations under the Contract Documents. Nothing in these insurance requirements shall be deemed to limit Contractor's liability under the Agreement.

4.12. If these insurance requirements are used in conjunction with a Project where an Affiliated Company of Barton Malow Company is acting as Construction Manager, Design Builder or otherwise (the "Construction Entity"), the term "Barton Malow Company" as used in these insurance requirements shall be deemed to be replaced with the name of the Construction Entity, and the additional insured requirements of Section 4.3 above shall be amended to include "Barton Malow Company", and all partners and/or members of the Construction Entity as applicable. "Affiliated Company" means any entity in which Barton Malow Company has an ownership interest.

SECTION 00700
GENERAL CONDITIONS OF THE CONTRACT

PART 1 - GENERAL

1.01 RELATED DOCUMENTS

A. Attention is directed to Bidding and Contract Requirements, and to Division 1, General Requirements, which are hereby made a part of this Section.

B. Specific attention is directed to the requirements described in Section 00800 Supplementary General Conditions and Section 00500 Agreement Form.

1.02 GENERAL CONDITIONS OF THE CONTRACT

A. Document **AIA 201/CMa 1992** Edition, **is** bound within this Project Manual and is a part of the Contract Documents

END OF SECTION 00700

AIA Document A201/CMa - Electronic Format

General Conditions of the Contract for Construction

Where the Construction Manager is NOT a Constructor

1992 Construction Manager-Adviser Edition

THIS DOCUMENT HAS IMPORTANT LEGAL CONSEQUENCES; CONSULTATION WITH AN ATTORNEY IS ENCOURAGED WITH RESPECT TO ITS MODIFICATION. AUTHENTICATION OF THIS ELECTRONICALLY DRAFTED AIA DOCUMENT MAY BE MADE BY USING AIA DOCUMENT D401.

Copyright 1975, 1980, © 1992 by The American Institute of Architects, 1735 New York Avenue N.W., Washington D.C. 20006-5292. Reproduction of the material herein or substantial quotation of its provisions without written permission of the AIA violates the copyright laws of the United States and will subject the violator to legal prosecution.

Table of Articles

1. GENERAL PROVISIONS
2. OWNER
3. CONTRACTOR
4. ADMINISTRATION OF THE CONTRACT
5. SUBCONTRACTORS
6. CONSTRUCTION BY OWNER OR BY OTHER CONTRACTORS
7. CHANGES IN THE WORK
8. TIME
9. PAYMENTS AND COMPLETION
10. PROTECTION OF PERSONS AND PROPERTY
11. INSURANCE AND BONDS
12. UNCOVERING AND CORRECTION OF WORK
13. MISCELLANEOUS PROVISIONS
14. TERMINATION OR SUSPENSION OF THE CONTRACT

INDEX

Acceptance of Nonconforming Work 9.6.6, 9.9.3, **12.3**
Acceptance of Work 9.6.6, 9.8.2, 9.9.3, 9.10.1, 9.10.3
Access to Work **3.16**, 6.2.1, 12.1
Accident Prevention 4.6.6, 10
Acts and Omissions 3.2.1, 3.2.2, 3.3.2, 3.12.8, 3.18, 4.6.6, 4.6.2., 4.7.9, 8.3.1, 10.1.4, 10.2.5, 13.4.2, 13.7, 14.1
Addenda 1.1.1, 3.11
Additional Costs, Claims for 4.7.6, **4.7.7**, 4.7.9, 6.1.1, 10.3
Additional Inspections and Testing 4.6.10, 9.8.2, 12.2.1, 13.5
Additional Time, Claims for 4.7.6, **4.7.8**, 4.7.9, 8.3.2, 10.3
ADMINISTRATION OF THE CONTRACT 3.3.3, **4**, 9.4, 9.5
Advertisement or Invitation to Bid 1.1.1
Aesthetic Effect 4.6.20, 4.9.1
Allowances 3.8
All-risk Insurance 11.3.1.1
Applications for Payment 4.6.9, 7.3.7, 9.2, **9.3**, 9.4, 9.5.1, 9.6.3, 9.8.3, 9.10.1, 9.10.3, 9.10.4, 11.1.3, 14.2.4
Approvals 2.4, 3.3.3, 3.5, 3.10.3, 3.12.4 through 3.12.8, 3.18.3, 4.6.12, 9.3.2, 11.3.1.4, 13.4.2, 13.5
Arbitration 4.5, 4.7.4, **4.9**, 8.3.1, 10.1.2, 11.3.9, 11.3.10
Architect **4.1**
Architect, and Certificate of Payment 4.6.9
Architect, Definition of 4.1.1
Architect, Extent of Authority 2.4.1, 3.12.6, 4.6.6, 4.7.2, 5.2, 6.3, 7.1.2, 7.2.1, 7.4, 9.2, 9.3.1, 9.4, 9.5, 9.6.3, 9.8.2, 9.8.3, 9.10.1, 9.10.3, 12.1, 12.2.1, 13.5.1, 13.5.2, 14.2.2, 14.2.4
Architect, Limitations of Authority and Responsibility 3.3.3, 3.12.8, 3.12.11, 4.6.5, 4.6.6, 4.6.10, 4.6.12, 4.6.17, 4.6.19, 4.6.20, 4.7.2, 5.2.1, 7.4, 9.6.4
Architect's Additional Services and Expenses 2.4, 9.8.2 11.3.1.1, 12.2.1, 12.2.4, 13.5.2, 13.5.3, 14.2.4
Architect's Administration of the Contract 4.6, 4.7.6, 4.7.7, 4.8, 9.4, 9.5
Architect's Approvals 2.4.1, 3.5.1, 3.10.3, 3.12.6, 3.12.8, 3.18.3, 4.6.12
Architect's Authority to Reject Work 3.5.1, 4.6.10, 12.1.2, 12.2.1
Architect's Copyright 1.3
Architect's Decisions 4.6.10, 4.6.12, 4.6.18, 4.6.19, 4.6.20, 4.7.2, 4.7.6, 4.8.1, 4.8.4, 4.9, 6.3, 8.1.3, 8.3.1, 9.2, 9.4, 9.5.1, 9.8.2, 9.9.1, 10.1.2, 13.5.2, 14.2.2, 14.2.4
Architect's Inspections 4.6.5, 4.6.16, 4.7.6, 9.4.3, 9.8.2, 9.9.2, 9.10.1, 13.5
Architect's Instructions 4.6.10, 4.6.12, 7.4.1, 9.4.3, 12.1, 13.5.2
Architect's Interpretations 4.6.18, 4.6.19, 4.7.7
Architect's On-Site Observations 4.6.5, 4.6.9, 4.7.6, 9.4.3, 9.5.1, 9.10.1, 13.5
Architect's Project Representative 4.6.17
Architect's Relationship with Contractor 1.1.2, 3.2.1, 3.2.2, 3.3.3, 3.5.1, 3.7.3, 3.11, 3.12.8, 3.12.11, 3.16, 3.18, 4.6.6, 4.6.7, 4.6.10, 4.6.12, 4.6.19, 5.2, 6.2.2, 7.3.4, 9.8.2, 10.1.2, 10.1.4, 10.1.5, 11.3.7, 12.1, 13.5
Architect's Relationship with Construction Manager 1.1.2, 2.4.1, 3.12.6, 3.12.8, 4.6.8, 4.6.10, 4.6.14, 4.6.16, 4.6.18, 6.3.1, 9.7.1, 9.8, 9.9.1, 9.9.2, 9.10.1, 9.10.2, 9.10.3, 12.2.4, 13.5.1,

© 1992 THE AMERICAN INSTITUTE OF ARCHITECTS, 1735 NEW YORK AVENUE, N.W., WASHINGTON, D.C., 20006-5292. AIA DOCUMENT A201/CMa - GENERAL CONDITIONS OF THE CONTRACT FOR CONSTRUCTION - CONSTRUCTION MANAGER-ADVISER EDITION - 1992 EDITION - AIA® - WARNING: Unlicensed photocopying violates U.S. copyright laws and will subject the violator to legal prosecution. This document was electronically produced with permission of the AIA and can be reproduced in accordance with your license without violation until the date of expiration as noted below. expiration as noted below. expiration as noted below. User Document: a201cma pe group final january 1, 2004.aia -- 1/13/2004. AIA License Number 1015952, which expires on 6/20/2004.

13.5.2, 13.5.4, 14.2.4
Architect's Relationship with Subcontractors 1.1.2, 4.6.6, 4.6.7, 4.6.10, 5.3.1, 9.6.3,9.6.4, 11.3.7
Architect's Representations 9.4.3, 9.5.1, 9.10.1
Architect's Site Visits 4.6.5, 4.6.9, 4.6.16, 4.7.6, 9.4.3, 9.5.1, 9.8.2, 9.9.2, 9.10.1, 13.5
Asbestos 10.1.2, 10.1.3,.10.1.4
Attorneys' Fees 3.18.1, 9.10.2, 10.1.4
Award of Separate Contracts 6.1.1
Award of Subcontracts and Other Contracts for Portions of the Work 5.2
Basic Definitions 1.1
Bidding Requirements 1.1.1, 1.1.7, 5.2.1, 11.4.1
Boiler and Machinery Insurance 11.3.2
Bonds, Lien 9.10.2
Bonds, Performance and Payment 7.3.6.4, 9.10.3, 11.3.9, 11.4
Building Permit 2.2.3, 3.7.1
Capitalization 1.4
Certificate of Substantial Completion 9.8.2
Certificates for Payment 4.6.8, 4.6.9, 9.3.3, **9.4**, 9.5, 9.6.1, 9.6.6, 9.7.1, 9.8.3, 9.10.1, 9.10.3, 13.7, 14.1.1.3, 14.2.4
Certificates of Inspection, Testing or Approval 3.12.11, 13.5.4
Certificates of Insurance 9.3.2, 9.10.2, 11.1.3
Change Orders 1.1.1, 2.4.1, 3.8.2.4, 3.11.1, 4.6.13, 4.7.3, 5.2.3, 7.1, **7.2**, 7.3.2, 8.3.1, 9.3.1.1, 9.10.3, 11.3.1.2, 11.3.4, 11.3.9, 12.1.2
Change Orders, Definition of 7.2.1
Changes 7.1
CHANGES IN THE WORK 3.11, 4.6.13, 4.6.14, **7**, 8.3.1, 9.3.1.1, 10.1.3
Claim, Definition of 4.7.1
Claims and Disputes **4.7**, 4.8, 4.9, 6.2.5, 8.3.2, 9.3.1.2, 9.3.3, 9.10.4, 10.1.4
Claims and Timely Assertion of Claims 4.9.6
Claims for Additional Cost 4.7.6, **4.7.7**, 4.7.9, 6.1.1, 10.3
Claims for Additional Time 4.6.9, 4.7.6, **4.7.8**, 4.7.9, 8.3.2
Claims for Concealed or Unknown Conditions 4.7.6
Claims for Damages 3.18, 4.7.9, 6.1.1, 6.2.5, 8.3.2, 9.5.1.2, 10.1.4
Claims Subject to Arbitration 4.7.2, 4.8.4, 4.6.1
Cleaning Up **3.15**, 6.3
Commencement of Statutory Limitation Period 13.7
Commencement of the Work, Conditions Relating to 2.12 ,2.2.1, 3.2.1, 3.2.2, 3.7.1, 3.10.1 3.12.6, 4.7.7, 5.2.1, 6.2.2, 8.1.2, 8.2.2, 9.2, 11.1.3, 11.3.6, 11.4.1
Commencement of the Work, Definition of 8.1.2
Communications, Owner to Architect 2.2.6
Communications, Owner to Construction Manager 2.2.6
Communications Facilitating Contract Administration 3.9.1 4.6.7, 5.2.1
Completion, Conditions Relating to 3.11, 3.15, 4.6.5, 4.6.16, 4.7.2, 9.4.2, 9.8, 9.9.1, 9.10, 11.3.5, 12.2.2, 13.7.1
COMPLETION, PAYMENTS AND 9
Completion, Substantial 4.6.16, 4.7.5.2, 8.1.1, 8.1.3, 8.2.3, **9.8**, 9.9.1, 12.2.2, 13.7
Compliance with Laws 1.3, 3.6, 3.7, 3.13, 4.1.1, 10.2.2, 11.1, 11.3, 13.1, 13.5.1, 13.5.2, 13.6, 14.1.1, 14.2.1.3
Concealed or Unknown Conditions 4.7.6
Conditions of the Contract 1.1.1, 1.1.7, 6.1.1
Consent, Written 1.3.1, 3.12.8, 3.14.2, 4.7.4, 4.9.5, 9.3.2, 9.8.2, 9.9.1, 9.10.2, 9.10.3, 10.12, 10.1.3, 11.3.1, 11.3.1.4, 11.3.11, 13.2, 13.4.2
CONSTRUCTION BY OWNER OR BY OTHER CONTRACTORS 1.1.4, 6
Notice to Proceed~~Construction Change Directive~~, Definition of 7.3.1
Notices to Proceed 1.1.1, 4.6.13, 7.1, **7.3**, 9.3.1.1
Construction Manager 4.2
Construction Manager, and Building Permits 2.2.3
Construction Manager, Claims against 4.7.2
Construction Manager, Communications through 4.6.7
Construction Manager, and Construction Schedule 3.10.1, 3.10.2
Construction Manager, Definition of 4.2.1
Construction Manager, and Documents and Samples at the Site 3.11.1
Construction Manager, Extent of Authority 3.12.6, 3.12.8, 4.3, 4.6.3, 4.6.11, 7.1.2, 7.2.1, 7.3.1, 8.3.1, 9.2.1, 9.3.1, 9.4.1, 9.4.3, 9.8.2, 9.8.3, 9.9.1, 12.1, 12.2.1, 12.2.4, 14.2.2, 14.2.4
Construction Manager, Limitations of Authority and Responsibility 4.6.6, 4.6.10, 13.4.2
Construction Manager, and Submittals 3.10.3
Construction Manager's Additional Services and Expenses 12.2.1, 12.2.4
Construction Manager's Administration of the Contract 4.6, 9.4, 9.5
Construction Manager's Approval 2.4.1, 3.10.3
Construction Manager's Authority to Reject Work 4.6.10, 12.2.1
Construction Manager's Decisions 7.3.6, 7.3.7, 7.3.8, 9.3.1, 9.4.1, 9.5.1
Construction Manager's Inspections 4.6.10, 9.4.3, 9.8.2, 9.9.2, 12.1.1
Construction Manager's On-Site Observations 9.5.1
Construction Manager's Relationship with Architect 1.1.2, 4.6.8, 4.6.10, 4.6.11, 4.6.14, 4.6.16, 4.6.18, 6.3.1, 9.2.1, 9.4.2, 9.4.3, 9.5.1, 9.6.1, 9.6.3, 9.8.2, 9.8.3, 9.9.1, 9.10.1, 9.10.2, 9.10.3, 11.1.3, 12.2.4, 13.5.1, 13.5.2, 13.5.4, 14.2.2, 14.2.4
Construction Manager's Relationship with Contractor 3.2.1, 3.2.2 3.3.1, 3.3.3, 3.5.1, 3.7.3, 3.10.1, 3.10.2, 3.10.3, 3.11.1, 3.12.5, 3.12.6, 3.12.8, 3.12.9, 3.12.10, 3.12.11, 3.13.2, 3.14.2, 3.15.2, 3.16.1, 3.17.1, 3.18.1, 3.18.3, 4.6.3, 4.6.4, 4.6.6, 4.6.11, 5.2, 6.2.1, 6.2.2, 7.1.2, 7.2.1, 7.3.4, 7.3.6, 7.3.9, 8.3.1, 9.2.1,9.3.1, 9.4.1, 9.4.2, 9.4.3, 9.7.1, 9.8.2, 9.9.1, 9.10.1, 9.10.2, 9.10.3, 10.1.1, 10.1.2, 10.1.5, 10.2.6, 11.3.7, 12.1, 13.5.1, 13.5.2, 13.5.3, 13.5.4
Construction Manager's Relationship with Owner 2.2.3, 4.6.1, 4.6.2, 10.1.6
Construction Manager's Relationship with Other Contractors and Owner's Own Forces 4.6.3
Construction Manager's Relationship with Subcontractors 4.6.10, 5.3.1, 9.6.3, 9.6.4
Construction Manager's Representations 9.4.3, 9.5.1
Construction Manager's Site Visits 9.4.4, 9.5.1
Construction Schedules, Contractor's 3.10, 4.6.3, 4.6.4
Contingent Assignment of Subcontracts 5.4
Continuing Contract Performance 4.7.4
Contract, Definition of 1.1.2
CONTRACT, TERMINATION OR SUSPENSION OF THE 4.7.7, 5.4.1.1, **14**
Contract Administration 3.3.3, 4, 9.4, 9.5
Contract Award and Execution, Conditions Relating to 3.7.1, 3.10, 5.2,9.2, 11.1.3, 11.3.6, 11.4.1
Contract Documents, The **1.1**, 1.2, 7
Contract Documents, Copies Furnished and Use of 1.3, 2.2.5, 5.3
Contract Documents, Definition of 1.1.1
Contract Performance During Arbitration 4.7.4, 4.9.3
Contract Sum 3.8, 4.7.6, 4.7.7, 4.8.4, 5.2.3, 7.2, 7.3, 9.1, 9.7, 11.3.1, 12.2.4, 12.3, 14.2.4
Contract Sum, Definition of 9.1.1
Contract Time 4.7.6, 4.7.8.1, 4.8.4, 7.2.1.3, 7.3, 8.2.1, 8.3.1, 9.7, 12.1.1
Contract Time, Definition of 8.1.1
CONTRACTOR 3
Contractor, Definition of 3.1.1, 6.1.2

© 1992 THE AMERICAN INSTITUTE OF ARCHITECTS, 1735 NEW YORK AVENUE, N.W., WASHINGTON, D.C., 20006-5292. AIA DOCUMENT A201/CMa - GENERAL CONDITIONS OF THE CONTRACT FOR CONSTRUCTION - CONSTRUCTION MANAGER-ADVISER EDITION - 1992 EDITION - AIA® - WARNING: Unlicensed photocopying violates U.S. copyright laws and will subject the violator to legal prosecution. This document was electronically produced with permission of the AIA and can be reproduced in accordance with your license without violation until the date of expiration as noted below. expiration as noted below. expiration as noted below. User Document: a201cma pe group final january 1, 2004.aia -- 1/13/2004. AIA License Number 1015952, which expires on 6/20/2004.

Contractor's Bid 1.1.1
Contractor's Construction Schedules **3.10**
Contractor's Employees 3.3.2, 3.4.2, 3.8.1, 3.9, 3.18, 4.6.6, 4.6.10, 8.1.2, 10.2, 10.3, 11.1.1, 14.2.1.1
Contractor's Liability Insurance **11.1**, 11.3.1.5
Contractor's Relationship with Other Contractors and Owner's Own Forces 3.12.5, 3.14.2, 4.6.3, 4.6.7, 12.2.5
Contractor's Relationship with Subcontractors 1.2.4, 3.3.2, 3.18.1, 3.18.2, 5.2, 5.3, 5.4, 9.6.2, 11.3.7, 11.3.8, 14.2.1.2
Contractor's Relationship with the Architect 1.1.2, 3.2.1, 3.2.2, 3.3.3, 3.5.1, 3.7.3, 3.10.1, 3.10.3, 3.11.1, 3.12.6, 3.12.8, 3.12.9, 3.16.1, 3.18, 4.6.6, 4.6.7, 4.6.10, 4.6.12, 4.6.19, 5.2, 6.2.2, 7.3.4, 9.2, 9.3.1, 9.8.2, 9.10.3,10.1.2, 10.1.5, 10.2.6, 11.3.7, 12.1, 13.5
Contractor's Relationship with the Construction Manager 1.1.2, 3.2.1, 3.2.2,3.3.1, 3.3.3, 3.5.1, 3.7.3, 3.7.4, 3.10.1, 3.10.2, 3.10.3, 3.11.1, 3.12.5, 3.12.6, 3.12.8, 3.12.9, 3.12.11, 3.13.2, 3.14.2, 3.15.2, 3.16.1, 3.17.1, 3.18.1, 3.18.3, 4.6.3, 4.6.4, 4.6.6, 5.2, 6.2.1, 6.2.2, 7.1.2, 7.2.1, 7.3.4, 7.3.6, 7.3.9, 8.3.1, 9.2.1, 9.3.1, 9.4.1, 9.4.2, 9.4.3, 9.7.1, 9.8.2, 9.9.1, 9.10.1, 9.10.2, 9.10.3, 10.1.1,10.1.2, 10.1.5, 10.2.6, 11.3.7, 12.1, 13.5.1, 13.5.2, 13.5.3, 13.5.4
Contractor's Representations 1.2.2, 3.5.1, 3.12.7, 6.2.2, 8.2.1, 9.3.3
Contractor's Responsibility for Those Performing the Work 3.3.2, 3.18, 4.6.6, 10
Contractor's Review of Contract Documents 1.2.2, 3.2, 3.7.3
Contractor's Right to Stop the Work 9.7
Contractor's Right to Terminate the Contract 14.1
Contractor's Submittals 3.10, 3.11, 3.12, 4.6.12, 5.2.1, 5.2.3, 7.3.6, 9.2, 9.3.1, 9.8.2, 9.9.1, 9.10.2, 9.10.3, 10.1.2, 11.4.2
Contractor's Superintendent 3.9, 10.2.6
Contractor's Supervision and Construction Procedures 1.2.4, 3.3, 3.4, 4.6.6, 8.2.2, 8.2.3, 10
Contractual Liability Insurance 11.1.1.7, 11.2.1, 11.3.1.5
Coordination and Correlation 1.2.2, 1.2.4, 3.3.1, 3.10, 3.12.7, 6.2.1
Copies Furnished of Drawings and Specifications 1.3, 2.2.5, 3.11
Correction of Work 2.3, 2.4, 3.2.1, 4.6.1, 9.8.2, 9.9.1, 12.1.2, 12.2, 13.7.1.3
Cost, Definition of 7.3.6
Costs 2.4, 3.2.1, 3.7.4, 3.8.2, 3.15.2., 4.7.6, 4.7.7, 4.7.8.1, 5.2.3, 6.1.1, 6.2.3, 6.3.1, 7.3.3.3, 7.3.6, 7.3.7, 9.7, 9.8.2, 9.10.2, 11.3.1.2,11.3.1.3, 11.3.4, 11.3.9, 12.1, 12.2.1, 12.2.4, 12.2.5, 13.5, 14
Cutting and Patching **3.14**, 6.2.6
Damage to Construction of Owner or Other Contractors 3.14.2, 6.2.4, 9.5.1.5, 10.2.1.2, 10.2.5, 10.3, 11.1, 11.3, 12.2.5
Damage to the Work 3.14.2, 9.9.1, 10.2.1.2, 10.2.5, 10.3, 11.3
Damages, Claims for 3.18, 4.6.9, 6.1.1, 6.2.5, 8.3.2, 9.5.1.2, 10.1.4
Damages for Delay 6.1.1, 8.3.3, 9.5.1.6, 9.7
Date of Commencement of the Work, Definition of 8.1.2
Date of Substantial Completion, Definition of 8.1.3
Day, Definition of 8.1.4
Decisions of the Architect 4.6, 4.7, 6.3, 8.1.3, 8.3.1, 9.2, 9.4, 9.5.1, 9.8.2, 9.9.1, 10.1.2, 13.5.2, 14.2.2, 14.2.4
Decisions of the Construction Manager 4.3, 7.3.6, 7.3.7, 7.3.8, 9.3.1, 9.4.1, 9.4.3, 9.5.1
Decisions to Withhold Certification **9.5**, 9.7, 14.1.1.3
Defective or Nonconforming Work, Acceptance, Rejection and Correction of 2.3, 2.4, 3.5.1, 4.6.1, 4.6.10, 4.7.5, 9.5, 9.8.2, 9.9.1, 10.2.5, 12, 13.7.1.3
Defective Work, Definition of 3.5.1
Definitions 1.1, 2.1.1, 3.1, 3.5.1, 3.12.1, 3.12.2, 3.12.3, 4.1.1, 4.2.1, 4.7.1, 5.1, 6.1.1, 7.2.1, 7.3.1, 7.3.6, 8.1, 9.1, 9.8.1
Delays and Extensions of Time 4.7.1, 4.7.8.1, 4.7.8.2, 6.1.1, 6.2.3, 7.2.1, 7.3.1.3, 7.3.4, 7.3.5, 7.3.8, 7.3.9, 8.1.1, **8.3**, 10.3.1, 14.1.1.4
Disputes 4.7, 4.8, 4.9, 6.2.5, 6.3, 7.3.8, 9.3.1.2
Documents and Samples at the Site 3.11
Drawings, Definition of 1.1.5
Drawings and Specifications, Use and Ownership of 1.1.1, 1.3, 2.2.5, 3.11, 5.3
Duty to Review Contract Documents and Field Conditions 3.2
Effective Date of Insurance 8.2.2, 11.1.2
Emergencies 4.7.7, **10.3**
Employees, Contractor's 3.3.2., 3.4.2, 3.8.1, 3.9, 3.18.1, 3.18.2, 4.6.6, 4.6.10, 8.1.2, 10.2, 10.3, 11.1.1, 14.2.1.1
Equipment, Labor, Materials and 1.1.3, 1.1.6, 3.4, 3.5.1, 3.8.2, 3.12.2, 3.12.3, 3.12.7, 3.12.11, 3.13, 3.15.1, 4.6.12, 6.2.1, 7.3.6, 9.3.2, 9.3.3, 11.3, 12.2.4, 14.1.2, 14.2.1, 14.2.2
Execution and Progress of the Work 1.2.3, 3.4.1, 3.5.1, 4.6.5, 4.6.6, 4.7.4, 4.7.8, 6.2.2, 7.1.3, 8.2, 8.3, 9.5, 9.9.1, 10.2.3, 10.2.4
Execution, Correlation and Intent of the Contract Documents **1.2**, 3.7.1
Extensions of Time 4.7.1, 4.7.8, 7.2.1.3, **8.3**, 10.3.1
Failure of Payment by Contractor 9.5.1.3, 14.2.1.2
Failure of Payment by Owner 4.7.7, 9.7, 14.1.3
Faulty Work (See Defective or Nonconforming Work)
Final Completion and Final Payment 4.6.1, 4.6.16, 4.7.2, 4.7.5, **9.10**, 11.1.2, 11.1.3, 11.3.5, 12.3.1, 13.7
Financial Arrangements, Owner's 2.2.1
Fire and Extended Coverage Insurance 11.3.1.1, 11.3.5, 11.3.7
GENERAL PROVISIONS **1**
Governing Law **13.1**
Guarantees (See Warranty and Warranties)
Hazardous Materials 10.1, 10.2.4
Identification of Contract Documents 1.2.1
Identification of Subcontractors and Suppliers 5.2.1
Indemnification 3.17, **3.18**, 9.10.2, 10.1.4, 11.3.1.2, 11.3.7
Information and Services Required of the Owner 2.1.2, **2.2**, 4.7.4, 6.2.6, 9.3.2, 9.6.1, 9.6.4, 9.8.3, 9.9.2, 9.10.3, 10.1.4, 11.2, 11.3, 13.5.1, 13.5.2
Injury or Damage to Person or Property **4.7.9**
Inspections 3.3.3, 3.3.4, 3.7.1, 4.6.5, 4.6.6, 4.6.16, 4.7.6, 9.4.3, 9.8.2, 9.9.2, 9.10.1, 12.1.1, 13.5
Instructions to Bidders 1.1.1
Instructions to the Contractor 3.8.1, 4.6.13, 5.2.1, 7, 12.1, 13.5.2
Insurance 4.7.9, 6.1.1, 7.3.6.4, 9.3.2, 9.8.2, 9.9.1, 9.10.2, 11
Insurance, Boiler and Machinery **11.3.2**
Insurance, Contractor's Liability **11.1**, 11.3.1.13
Insurance, Effective Date of 8.2.2, 11.1.2
Insurance, Loss of Use **11.3.3**
Insurance, Owner's Liability **11.2**, 11.3.1.3
Insurance, Property 10.2.5, **11.3**
Insurance, Stored Materials 9.3.2, 11.3.1.4
INSURANCE AND BONDS **11**
Insurance Companies, Consent to Partial Occupancy 9.9.1, 11.3.11
Insurance Companies, Settlement with 11.3.10
Intent of the Contract Documents 1.2.3, 3.12.4, 4.6.10, 4.6.12, 4.6.19, 4.6.20, 7.4
Interest **13.6**
Interpretation 1.2.5, 1.4, **1.5**, 4.1.1, 4.7.1, 5.1, 6.1.2, 8.1.4
Interpretations, Written 4.6.18, 4.6.19, 4.7.7
Joinder and Consolidation of Claims Required 4.9.5
Judgment on Final Award 4.9.1, 4.9.4.1, **4.9.7**
Labor and Materials, Equipment 1.1.3, 1.1.6, **3.4**, 3.5.1, 3.8.2, 3.12.2, 3.12.3, 3.12.7, 3.12.11, 3.13, 3.15.1, 4.6.12,

© 1992 THE AMERICAN INSTITUTE OF ARCHITECTS, 1735 NEW YORK AVENUE, N.W., WASHINGTON, D.C., 20006-5292. AIA DOCUMENT A201/CMa - GENERAL CONDITIONS OF THE CONTRACT FOR CONSTRUCTION - CONSTRUCTION MANAGER-ADVISER EDITION - 1992 EDITION - AIA® - WARNING: Unlicensed photocopying violates U.S. copyright laws and will subject the violator to legal prosecution. This document was electronically produced with permission of the AIA and can be reproduced in accordance with your license without violation until the date of expiration as noted below. expiration as noted below. expiration as noted below. User Document: a201cma pe group final january 1, 2004.aia -- 1/13/2004. AIA License Number 1015952, which expires on 6/20/2004.

6.2.1, 7.3.6, 9.3.2, 9.3.3, 12.2.4, 14.1.2, 14.2.1, 14.2.2
Labor Disputes 8.3.1
Laws and Regulations 1.3, 3.6, 3.7, 3.13, 4.1.1, 4.9.5, 4.9.7, 9.9.1, 10.2.2, 11.1, 11.3, 13.1, 13.4.1, 13.5.1, 13.5.2, 13.6
Liens 2.1.2, 4.7.2, 4.7.5.1, 8.2.2, 9.3.3, 9.10.2
Limitation on Consolidation or Joinder 4.9.5
Limitations, Statutes of 4.9.4.2, 12.2.6, 13.7
Limitations of Authority 3.3.1, 4.6.12, 4.6.17, 5.2.2, 5.2.4, 7.4, 11.3.10
Limitations of Liability 2.3, 3.2.1, 3.5.1, 3.7.3, 3.12.8, 3.12.11, 3.17, 3.18, 4.6.10, 4.6.12, 4.6.19, 6.2.2, 9.4.3, 9.6.4, 9.10.4, 10.1.4, 10.2.5, 11.1.2, 11.2.1, 11.3.7, 13.4.2, 13.5.2
Limitations of Time, General 2.2.1, 2.2.4, 3.2.1, 3.7.3, 3.8.2, 3.10, 3.12.5, 3.15.1, 4.6.1, 4.6.12, 4.6.18, 4.7.2, 4.7.3, 4.7.4, 4.7.6,.4.7.9, 4.6.4.2, 5.2.1, 5.2.3, 6.2.4, 7.3.4, 7.4, 8.2, 9.2, 9.5, 9.6.2, 9.8, 9.10, 11.1.3, 11.3.1, 11.3.2, 11.3.5, 11.3.6, 12.2.1, 12.2.2, 13.5, 13.7, 14.3
Limitations of Time, Specific 2.1.2, 2.2.1, 2.4, 3.10, 3.11, 3.15.1, 4.6.1, 4.6.18, 4.7, 4.8, 4.9, 5.3, 5.4, 7.3.5, 7.3.9, 8.2, 9.3.1, 9.3.3, 9.4.1, 9.6.1, 9.7, 9.8.2, 9.10.2, 11.1.3, 11.3.6, 11.3.10, 11.3.11, 12.2.2, 12.2.4, 12.2.6, 13.7, 14.1, 14.2.2
Loss of Use Insurance 11.3.3
Material Suppliers 1.3.1, 3.12.1, 4.6.7, 4.6.10, 5.2.1, 9.3.1, 9.3.1.2, 9.3.3, 9.4.3, 9.6.5, 9.10.4
Materials, Hazardous 10.1, 10.2.4
Materials, Labor, Equipment and 1.1.3, 1.1.6, 3.4.1, 3.5.1, 3.8.2, 3.12.2, 3.12.3, 3.12.7, 3.12.11, 3.13, 3.15.1, 4.6.12, 6.2.1, 7.3.6, 9.3.2, 9.3.3, 12.2.4, 14.1.2, 14.2.1, 14.2.2
Means, Methods, Techniques, Sequences and Procedures of Construction 3.3.1, 4.6.6, 4.6.12, 9.4.3
Minor Changes in the Work 1.1.1, 4.6.13, 4.7.7, 7.1, 7.4
MISCELLANEOUS PROVISIONS 13
Modifications, Definition of 1.1.1
Modifications to the Contract 1.1.1, 1.1.2, 3.7.3, 3.11, 4.1.2, 4.6.1, 5.2.3, 7, 8.3.1, 9.7
Mutual Responsibility 6.2
Nonconforming Work, Acceptance of 12.3
Nonconforming Work, Rejection and Correction of 2.3.1, 4.7.5.2, 9.5.2, 9.8.2, 12, 13.7.1.3
Notice 2.3, 2.4, 3.2.1, 3.2.2, 3.7.3, 3.7.4, 3.9, 3.12.8, 3.12.9, 3.17, 4.7, 4.8.4, 4.9, 5.2.1, 5.3, 5.4.1.1, 8.2.2, 9.4.1, 9.5.1, 9.7, 9.10, 10.1.2, 10.2.6, 11.1.3, 11.3, 12.2.2, 12.2.4, 13.3, 13.5.1, 13.5.2, 14,
Notice, Written 2.3, 2.4, 3.9, 3.12.8, 3.12.9,4.7, 4.8.4, 4.9, 5.2.1, 5.3, 5.4.1.1, 8.2.2, 9.4.1, 9.5.1, 9.7, 9.10, 10.1.2, 10.2.6, 11.1.3, 11.3, 12.2.2, 12.2.4, **13.3**, 13.5.2, 14
Notice of Testing and Inspections 13.5.1, 13.5.2
Notice to Proceed 8.2.2
Notices, Permits, Fees and 2.2.3, **3.7**, 3.13, 7.3.6.4, 10.2.2
Observations, Architect's On-Site 4.6.5, 4.6.9, 4.6.10, 4.7.6, 9.4.4, 9.5.1, 9.10.1, 12.1.1, 13.5
Observations, Construction Manager's On-Site 9.4.4, 12.1.1
Observations, Contractor's 1.2.2, 3.2.2
Occupancy 9.6.6, 9.8.1, 9.9, 11.3.11
On-Site Inspections by the Architect 4.6.5, 4.6.16, 4.7.6, 9.4.4, 9.8.2, 9.9.2, 9.10.1
On-Site Observations by the Architect 4.6.5, 4.6.9, 4.7.6, 9.4.4, 9.5.1, 9.10.1, 13.5
On-Site Observations by the Construction Manager 9.4.4, 9.5.1
Orders, Written 2.3, 3.9, 4.7.7, 7, 8.2.2, 11.3.9, 12.1, 12.2, 13.5.2, 14.3.1
Other Contracts and Contractors 1.1.4, 3.14.2, 4.6.7, 4.9.5, 6, 11.3.7, 12.1.2, 12.2.5
OWNER 2
Owner, Definition of 2.1
Owner, Information and Services Required of the 2.1.2, **2.2**, 4.6.2, 4.6.4, 6, 9, 10.1.4, 10.1.6, 11.2, 11.3, 13.5.1, 14.1.1.5, 14.1.3
Owner's Authority 3.8.1, 5.2.1, 5.2.4, 5.4.1, 7.3.1, 8.2.2, 9.3.1, 9.3.2, 11.4.1, 12.2.4, 13.5.2, 14.2, 14.3.1
Owner's Financial Capability 2.2.1, 14.1.1.5
Owner's Liability Insurance 11.2
Owner's Loss of Use Insurance 11.3.3
Owner's Relationship with Subcontractors 1.1.2, 5.2.1, 5.4.1, 9.6.4
Owner's Right to Carry Out the Work 2.4, 12.2.4, 14.2.2.2
Owner's Right to Clean Up 6.3
Owner's Right to Perform Construction with Own Forces and to Award Other Contracts 6.1
Owner's Right to Stop the Work 2.3, 4.7.7
Owner's Right to Suspend the Work 14.3
Owner's Right to Terminate the Contract 14.2
Ownership and Use of Architect's Drawings, Specifications and Other Documents 1.1.1, **1.3**, 2.2.5, 5.3
Partial Occupancy or Use 9.6.6, **9.9**, 11.3.11
Patching, Cutting and 3.14, 6.2.6
Patents, Royalties and 3.17
Payment, Applications for 4.6.9, 9.2, **9.3**, 9.4, 9.5.1, 9.8.3, 9.10.1, 9.10.3, 9.10.4, 14.2.4
Payment, Certificates for 4.6.9, 4.6.16, 9.3.3, **9.4**, 9.5, 9.6.1, 9.6.6, 9.7.1, 9.8.3, 9.10.1, 9.10.3, 13.7, 14.1.1.3, 14.2.4
Payment, Failure of 4.7.7, 9.5.1.3, **9.7**, 9.10.2, 14.1.1.3, 14.2.1.2
Payment, Final 4.6.1, 4.6.16, 4.7.2, 4.7.5, **9.10**, 11.1.2, 11.1.3, 11.3.5, 12.3.1
Payment Bond, Performance Bond and 7.3.6.4, 9.10.3, 11.3.9, **11.4**
Payments, Progress 4.7.4, 9.3, **9.6**, 9.8.3, 9.10.3, 13.6, 14.2.3
PAYMENTS AND COMPLETION 9, 14
Payments to Subcontractors 5.4.2, 9.5.1.3, 9.6.2, 9.6.3, 9.6.4, 11.3.8, 14.2.1.2
PCB 10.1.2, 10.1.3, 10.1.4
Performance Bond and Payment Bond 7.3.6.4, 9.10.3, 11.3.9, 11.4
Permits, Fees and Notices 2.2.3, **3.7**, 3.13, 7.3.6.4, 10.2.2
PERSONS AND PROPERTY, PROTECTION OF 10
Polychlorinated Biphenyl 10.1.2, 10.1.3, 10.1.4
Product Data, Definition of 3.12.2
Product Data and Samples, Shop Drawings 3.11, **3.12**, 4.2.7
Progress and Completion 4.6.5, 4.7.4, **8.2**
Progress Payments 4.7.4, 9.3, **9.6**, 9.8.3, 9.10.3, 13.6, 14.2.3
Project, Definition of the **1.1.4**
Project Manual, Definition of the **1.1.7**
Project Manuals 2.2.5
Project Representatives 4.6.17
Property Insurance 10.2.5, **11.3**
PROTECTION OF PERSONS AND PROPERTY 10
Regulations and Laws 1.3, 3.6, 3.7, 3.13, 4.1.1, 4.9.7 10.2.2, 11.1, 11.3, 13.1, 13.4, 13.5.1, 13.5.2, 13.6, 14
Rejection of Work 3.5.1, 4.6.10, 12.2.
Releases of Waivers and Liens 9.10.2
Representations 1.2.2, 3.5.1, 3.12.7, 6.2.2, 8.2.1, 9.3.3, 9.4.3, 9.5.1, 9.8.2, 9.10.1
Representatives 2.1.1, 3.1.1, 3.9, 4.1.1, 4.6.1, 4.6.17, 5.1.1, 5.1.2, 13.2.1
Resolution of Claims and Disputes 4.8, 4.9
Responsibility for Those Performing the Work 3.3.2, 4.6.6, 6.2., 10
Retainage 9.3.1, 9.6.2, 9.8.3, 9.9.1, 9.10.2, 9.10.3
Review of Contract Documents and Field

© 1992 THE AMERICAN INSTITUTE OF ARCHITECTS, 1735 NEW YORK AVENUE, N.W., WASHINGTON, D.C., 20006-5292. AIA DOCUMENT A201/CMa - GENERAL CONDITIONS OF THE CONTRACT FOR CONSTRUCTION - CONSTRUCTION MANAGER-ADVISER EDITION - 1992 EDITION - AIA® - WARNING: Unlicensed photocopying violates U.S. copyright laws and will subject the violator to legal prosecution. This document was electronically produced with permission of the AIA and can be reproduced in accordance with your license without violation until the date of expiration as noted below. expiration as noted below. expiration as noted below. User Document: a201cma pe group final january 1, 2004.aia -- 1/13/2004. AIA License Number 1015952, which expires on 6/20/2004.

Conditions by Contractor 1.2.2, **3.2**, 3.7.3, 3.12.7
Review of Contractor's Submittals by Owner, Construction Manager and Architect 3.10.1, 3.10.3, 3.11, 3.12, 4.6.12. 4.6.16, 5.2.1, 5.2.3, 9.2, 9.8.2
Review of Shop Drawings, Product Data and Samples by Contractor 3.12.5
Rights and Remedies 1.1.2, 2.3, 2.4, 3.5.1, 3.15.2, 4.6.10, 4.7.6, 4.9, 5.3, 6.1, 6.3, 7.3.1, 8.3.1, 9.5.1, 9.7, 10.2.5, 10.3, 12.2.2, 12. 2.4, **13.4**, 14
Royalties and Patents **3.17**
Rules and Notices for Arbitration **4.9.2**
Safety of Persons and Property **10.2**
Safety Precautions and Programs 4.6.6, 4.6.12, **10.1**
Samples, Definition of 3.12.3
Samples, Shop Drawings, Product Data and 3.11, **3.12**, 4.6.12
Samples at the Site, Documents and **3.11**
Schedule of Values **9.2**, 9.3.1
Schedules, Construction 3.10
Separate Contracts and Contractors 1.1.4
Shop Drawings, Definition of 3.12.1
Shop Drawings, Product Data and Samples 3.11, **3.12**, 4.6.11, 4.6.12, 4.6.15
Site, Use of **3.13**, 6.1.1, 6.2.1
Site Inspections 1.2.2, 3.3.4, 4.6.5, 4.6.16, 4.7.6, 9.8.2, 9.10.1, 13.5
Site Visits, Architect's 4.6.5, 4.6.9, 4.7.6, 9.4, 9.5.1, 9.8.2, 9.9.2, 9.10.1, 13.5
Special Inspections and Testing 4.6.10, 12.2.1, 13.5
Specifications, Definition of the **1.1.6**
Specifications, The 1.1.1, **1.1.6**, 1.1.7, 1.2.4, 1.3, 3.11
Statute of Limitations 4.9.4.2, 12.2.6, 13.7
Stopping the Work 2.3, 4.7.7, 9.7, 10.1.2, 10.3, 14.1
Stored Materials 6.2.1, 9.3.2, 10.2.1.2, 11.3.1.4, 12.2.4
Subcontractor, Definition of 5.1.1
SUBCONTRACTORS **5**
Subcontractors, Work by 1.2.4, 3.3.2, 3.12.1, 4.6.6, 4.6.10, 5.3, 5.4
Subcontractual Relations **5.3**, 5.4, 9.3.1.2, 9.6.2, 9.6.3, 9.6.4, 10.2.1, 11.3.7, 11.3.8, 14.1.1, 14.2.1.2, 14.1.3
Submittals 1.3, 3.2.3, 3.10, 3.11, 3.12, 4.6.12, 5.2.1, 5.2.3, 7.3.6, 9.2, 9.3.1, 9.8.2, 9.9.1, 9.10.2, 9.10.3, 11.1.3
Subrogation, Waivers of 6.1.1, 11.3.5, **11.3.7**
Substantial Completion 4.6.16, 8.1.1, 8.1.3, 8.2.3, **9.8**, 9.9.1, 12.2.1, 12.2.2, 13.7
Substantial Completion, Definition of 9.8.1
Substitution of Subcontractors 5.2.3, 5.2.4
Substitution of Architect 4.4
Substitution of Construction Manager 4.4
Substitutions of Materials 3.5.1
Sub-subcontractor, Definition of 5.1.2
Subsurface Conditions 4.7.6
Successors and Assigns **13.2**
Superintendent **3.9**, 10.2.6
Supervision and Construction Procedures 1.2.4, **3.3**, 3.4, 4.6.6, 4.7.4, 6.2.4, 7.1.3, 7.3.4, 8.2, 8.3.1, 10, 12, 14
Surety 4.8.1, 4.8.4, 5.4.1.2, 9.10.2, 9.10.3, 14.2.2
Surety, Consent of 9.10.2, 9.10.3
Surveys 2.2.2, 3.18.3
Suspension by the Owner for Convenience **14.3**
Suspension of the Work 4.7.7, 5.4.2, 14.1.1.4, 14.3
Suspension or Termination of the Contract 4.7.7, 5.4.1.1, 14
Taxes **3.6**, 7.3.6.4
Termination by the Contractor **14.1**
Termination by the Owner for Cause 5.4.1.1, **14.2**
Termination of the Architect 4.4
Termination of the Construction Manager 4.4
Termination of the Contractor 14.2.2
TERMINATION OR SUSPENSION OF THE CONTRACT **14**
Tests and Inspections 3.3.3, 4.6.10, 4.6.16, 9.4.3, 12.2.1, **13.5**
TIME **8**
Time, Delays and Extensions of 4.7.8, 7.2.1, **8.3**
Time Limits, Specific 2.1.2, 2.2.1, 2.4, 3.10, 4.6.18, 4.7, 4.8.1, 4.8.3, 4.8.4, 4.9.1, 4.9.4.1, 4.9.4.2, 5.3, 5.4, 7.3.5, 7.3.9, 8.2, 9.2, 9.3.1, 9.3.3, 9.4.1, 9.6.1, 9.7, 9.8.2, 9.10.2, 11.1.3, 11.3.6, 11.3.10, 11.3.11, 12.2.2, 12.2.4, 12.2.6, 13.7, 14
Time Limits on Claims 4.7.2, **4.7.3**, 4.7.6, 4.7.9, 4.8, 4.9
Title to Work 9.3.2, 9.3.3
UNCOVERING AND CORRECTION OF WORK **12**
Uncovering of Work **12.1**
Unforeseen Conditions 4.7.6, 8.3.1, 10.1
Unit Prices 7.1.4, 7.3.3.2
Use of Documents 1.1.1, 1.3, 2.2.5, 3.12.7, 5.3
Use of Site **3.13**, 6.1.1, 6.2.1
Values, Schedule of **9.2**, 9.3.1
Waiver of Claims: Final Payment **4.7.5**, 4.9.1, 9.10.3
Waiver of Claims by the Architect 13.4.2
Waiver of Claims by the Contractor 9.10.4, 11.3.7, 13.4.2
Waiver of Claims by the Owner 4.7.5, 4.9.1, 9.9.3, 9.10.3, 11.3.3, 11.3.5, 11.3.7, 13.4.2
Waiver of Liens 9.10.2
Waivers of Subrogation 6.1.1, 11.3.5, **11.3.7**
Warranty and Warranties **3.5**, 4.6.16, 4.7.5, 9.3.3, 9.8.2, 9.9.1, 12.2.2, 13.7.1.3
Weather Delays 4.7.8.2
When Arbitration May Be Demanded **4.9.4**
Work, Definition of 1.1.3
Written Consent 1.3.1, 3.12.8, 3.14.2, 4.7.4, 4.9.5, 9.3.2, 9.8.2, 9.9.1, 9.10.2, 9.10.3, 10.1.2, 10.1.3, 11.3.1, 11.3.1.4, 11.3.11, 13.2, 13.4.2
Written Interpretations 4.6.18, 4.6.19, 4.7.7
Written Notice 2.3, 2.4, 3.9, 3.12.8, 3.12.9, 4.7.1, 4.7.6, 4.7.9, 4.8.4, 4.9.4.1, 5.2.1, 5.3, 5.4.1.1, 8.2.2, 9.4, 9.5.1, 9.7, 9.10, 10.1.2, 10.2.6, 11.1.3, 11.3, 12.2.2, 12.2.4, **13.3**, 13.5.2, 14
Written Orders 2.3, 3.9, 4.7.7, 8.2.2, 11.3.9, 12.1, 12.2, 13.5.2, 14.3.1

© 1992 THE AMERICAN INSTITUTE OF ARCHITECTS, 1735 NEW YORK AVENUE, N.W., WASHINGTON, D.C., 20006-5292. AIA DOCUMENT A201/CMa - GENERAL CONDITIONS OF THE CONTRACT FOR CONSTRUCTION - CONSTRUCTION MANAGER-ADVISER EDITION - 1992 EDITION - AIA® - WARNING: Unlicensed photocopying violates U.S. copyright laws and will subject the violator to legal prosecution. This document was electronically produced with permission of the AIA and can be reproduced in accordance with your license without violation until the date of expiration as noted below. expiration as noted below. expiration as noted below. User Document: a201cma pe group final january 1, 2004.aia -- 1/13/2004. AIA License Number 1015952, which expires on 6/20/2004.

ARTICLE 1
GENERAL PROVISIONS

1.1 BASIC DEFINITIONS

1.1.1 THE CONTRACT DOCUMENTS

The Contract Documents consist of the Agreement between Owner and Contractor (hereinafter the Agreement), Conditions of the Contract (General, Supplementary and other Conditions), Drawings, Specifications, addenda issued prior to execution of the Contract, the portions of the Project Manual defined as Contract Documents therein, and other documents listed in the Agreement and Modifications issued after execution of the Contract. A Modification is (1) a written amendment to the Contract signed by both parties, (2) a Change Order, (3) a Notice to Proceed~~Construction Change Directive~~ or (4) a written order for a minor change in the Work issued by the Architect. Unless specifically enumerated in the Agreement, the Contract Documents do not include other documents such as bidding requirements (advertisement or invitation to bid, Instructions to Bidders, sample forms, the Contractor's bid or portions of addenda relating to bidding requirements).

In the event of any conflict among the Contract Documents, the Contract Documents shall be construed according to the following priorities:

Highest Priority: Modifications including Change Orders and Notice to Proceeds;
2nd Priority: Owner/Contractor Agreement;
3rd Priority: Addenda, later date to take precedence;
4th Priority: The Contract Documents (other than those mentioned above) that are included in the Project Manual sections 0 - 2000;
5th Priority: Drawings and Technical Specifications.

In the event of a conflict among the General Conditions and Supplementary Conditions, the Supplementary Conditions shall control.

1.1.2 THE CONTRACT

The Contract Documents form the Contract for Construction. The Contract represents the entire and integrated agreement between the parties hereto and supersedes prior negotiations, representations or agreements, either written or oral. The Contract may be amended or modified only by a Modification. The Contract Documents shall not be construed to create a contractual relationship of any kind (1) between the Architect and Contractor, (2) between the Construction Manager and Contractor, (3) between the Architect and Construction Manager, (4) between the Owner and a Subcontractor or Sub-subcontractor or (5) between any persons or entities other than the Owner and Contractor. The Construction Manager and Architect shall, however, be entitled to performance and enforcement of obligations under the Contract intended to facilitate performance of their duties.

1.1.3 THE WORK

The term "Work" means the construction and services required by the Contract Documents, whether completed or partially completed, and includes all other labor, materials, equipment and services provided or to be provided by the Contractor to fulfill the Contractor's obligations. The Work may constitute the whole or a part of the Project.

1.1.4 THE PROJECT

The Project is the total construction of which the Work performed under the Contract Documents may be the whole or a part and which may include construction by other Contractors and by the Owner's own forces including persons or entities under separate contracts not administered by the Construction Manager.

1.1.5 THE DRAWINGS

The Drawings are the graphic and pictorial portions of the Contract Documents, ~~wherever located and whenever issued,~~ showing the design, location and dimensions of the Work, generally including plans, elevations, sections, details, schedules and diagrams.

1.1.6 THE SPECIFICATIONS

The Specifications are that portion of the Contract Documents consisting of the written requirements for materials, equipment, construction systems, standards and workmanship for the Work, and performance of related services.

1.1.7 THE PROJECT MANUAL

The Project Manual is the volume usually assembled for the Work which may include the bidding requirements, sample forms, Conditions of the Contract and Specifications.

1.1.8 Provide. When the word "provide," including derivatives, is used, it shall mean to fabricate properly, complete, transport, deliver, install, erect, construct, test, and furnish all labor, materials, equipment, apparatus, appurtenances, and all other items necessary to properly

© 1992 THE AMERICAN INSTITUTE OF ARCHITECTS, 1735 NEW YORK AVENUE, N.W., WASHINGTON, D.C., 20006-5292. AIA DOCUMENT A201/CMa - GENERAL CONDITIONS OF THE CONTRACT FOR CONSTRUCTION - CONSTRUCTION MANAGER-ADVISER EDITION - 1992 EDITION - AIA® - WARNING: Unlicensed photocopying violates U.S. copyright laws and will subject the violator to legal prosecution. This document was electronically produced with permission of the AIA and can be reproduced in accordance with your license without violation until the date of expiration as noted below. expiration as noted below. expiration as noted below. User Document: a201cma pe group final january 1, 2004.aia -- 1/13/2004. AIA License Number 1015952, which expires on 6/20/2004.

complete in place, ready for operation or use under the terms of the Specifications.

1.1.9 **Addenda.** Addenda are written or graphic instruments issued prior to the execution of the Contract that modify or interpret the Bidding Documents, including the Drawings and Specifications, by additions, deletions, clarifications, or corrections.

1.1.10 **Knowledge.** The terms "knowledge," "recognize," and "discover," their respective derivatives, and similar terms in the Contract Documents, as used in reference to the Contractor, shall mean that which the Contractor knows (or should know), recognizes (or should recognize) and discovers (or should discover) in exercising the care, skill, and diligence required by the Contract Documents. Analogously, the expression "reasonably inferable" and similar terms in the Contract Documents shall be interpreted to mean reasonably inferable by a contractor exercising the care, skill and diligence required of the Contractor by the Contract Documents.

1.1.11 **Persistently.** The phrase "persistently fails" and other similar expressions, as used in reference to the Contractor, shall mean any combination of acts and omissions that cause the Owner, Construction Manager, or Architect to reasonably conclude that the Contractor will not complete the Work within the Contract Time, for the Contract Sum, or in substantial compliance with the requirements of the Contract Documents.

1.2 EXECUTION, CORRELATION AND INTENT

1.2.1 The Contract Documents shall be signed, in not less than triplicate, by the Owner and Contractor as provided in the Agreement. If either the Owner or Contractor or both do not sign all the Contract Documents, the Architect shall identify such unsigned Documents upon request.

1.2.2 Execution of the Contract by the Contractor is a representation that the Contractor has visited the site, become familiar with local conditions under which the Work is to be performed and correlated personal observations with requirements of the Contract Documents.

1.2.3 The intent of the Contract Documents is to include all items necessary for the proper execution and completion of the Work by the Contractor. The Contract Documents are complementary, and what is required by one shall be as binding as if required by all; ~~performance by the Contractor shall be required only to the extent consistent with the Contract Documents and reasonably inferable from them as being necessary to produce the intended results.~~ In the event of inconsistencies within or between parts of the Contract Documents, or between the Contract Documents and the applicable standards, codes, and ordinances, the Contractor shall (1) provide the better quality or greater quantity of Work, or (2) comply with the more stringent requirement, either or both in accordance with the Architect's interpretation. The terms and conditions of this Subparagraph 1.2.3, however, shall not relieve the Contractor of any of the obligations set forth in Paragraphs 3.2 and 3.7.

1.2.3.1 On the Drawings, given dimensions shall take precedence over scaled measurements, and large-scale drawings over small scale drawings.

1.2.3.2 Before ordering any materials or doing any Work, the Contractor and each Subcontractor shall verify measurements at the Project site and shall be responsible for the correctness of such measurements. No extra charges or compensation will be allowed on account of differences between actual dimensions and the dimensions indicated on the Drawings. Any difference that may be found shall be submitted to the Construction Manager and Architect for resolution before proceeding with the Work.

1.2.3.3 If a minor change in the Work is found necessary due to actual field conditions, the Contractor shall submit detailed drawings of such departure to the Construction Manager for approval by the Architect before making the change.

1.2.4 Organization of the Specifications into divisions, sections and articles, and arrangement of Drawings shall not control the Contractor in dividing the Work among Subcontractors or in establishing the extent of Work to be performed by any trade.

1.2.5 Unless otherwise stated in the Contract Documents, words which have well-known technical or construction industry meanings are used in the Contract Documents in accordance with such recognized meanings.

1.3 OWNERSHIP AND USE OF ARCHITECT'S DRAWINGS, SPECIFICATIONS AND OTHER DOCUMENTS

1.3.1 The Drawings, Specifications and other documents prepared by the Architect are instruments of the Architect's service through which the Work to be executed by the Contractor is described. The Contractor may retain one contract record set. Neither the Contractor nor any Subcontractor, Sub-subcontractor or material or equipment supplier shall own or claim a copyright in the Drawings, Specifications and other documents prepared by the Architect, and unless otherwise indicated the Architect shall be deemed the author of them and will retain all common law, statutory and other reserved rights, in addition to the copyright. All

© 1992 THE AMERICAN INSTITUTE OF ARCHITECTS, 1735 NEW YORK AVENUE, N.W., WASHINGTON, D.C., 20006-5292. AIA DOCUMENT A201/CMa - GENERAL CONDITIONS OF THE CONTRACT FOR CONSTRUCTION - CONSTRUCTION MANAGER-ADVISER EDITION - 1992 EDITION - AIA® - WARNING: Unlicensed photocopying violates U.S. copyright laws and will subject the violator to legal prosecution. This document was electronically produced with permission of the AIA and can be reproduced in accordance with your license without violation until the date of expiration as noted below. expiration as noted below. expiration as noted below. User Document: a201cma pe group final january 1, 2004.aia -- 1/13/2004. AIA License Number 1015952, which expires on 6/20/2004.

copies of them, except the Contractor's record set, shall be returned or suitably accounted for to the Architect, on request, upon completion of the Work. The Drawings, Specifications and other documents prepared by the Architect, and copies thereof furnished to the Contractor, are for use solely with respect to this Project. They are not to be used by the Contractor or any Subcontractor, Sub-subcontractor or material or equipment supplier on other projects or for additions to this Project outside the scope of the Work without the specific written consent of the Owner and Architect. The Contractor, Subcontractors, Sub-subcontractors and material or equipment suppliers are granted a limited license to use and reproduce applicable portions of the Drawings, Specifications and other documents prepared by the Architect appropriate to and for use in the execution of their Work under the Contract Documents. All copies made under this license shall bear the statutory copyright notice, if any, shown on the Drawings, Specifications and other documents prepared by the Architect. Submittal or distribution to meet official regulatory requirements or for other purposes in connection with this Project is not to be construed as publication in derogation of the Architect's copyright or other reserved rights.

1.4 CAPITALIZATION

1.4.1 Terms capitalized in these General Conditions include those which are (1) specifically defined, (2) the titles of numbered articles and identified references to Paragraphs, Subparagraphs and Clauses in the document or (3) the titles of other documents published by the American Institute of Architects.

1.5 INTERPRETATION

1.5.1 In the interest of brevity the Contract Documents frequently omit modifying words such as "all" and "any" and articles such as "the" and "an," but the fact that a modifier or an article is absent from one statement and appears in another is not intended to affect the interpretation of either statement.

ARTICLE 2
OWNER

2.1 DEFINITION

2.1.1 The Owner is the person or entity identified as such in the Agreement and is referred to throughout the Contract Documents as if singular in number. The term "Owner" means the Owner or the Owner's authorized representative.

~~**2.1.2** The Owner upon reasonable written request shall furnish to the Contractor in writing information which is necessary and relevant for the Contractor to evaluate, give notice of or enforce mechanic's lien rights. Such information shall include a correct statement of the record legal title to the property on which the Project is located, usually referred to as the site, and the Owner's interest therein at the time of execution of the Agreement and, within five days after any change, information of such change in title, recorded or unrecorded.~~

2.2 INFORMATION AND SERVICES REQUIRED OF THE OWNER

2.2.1 The Owner shall, at the request of the Contractor, prior to execution of the Agreement and promptly from time to time thereafter, furnish to the Contractor reasonable evidence that financial arrangements have been made to fulfill the Owner's obligations under the Contract. ~~*[Note: Unless such reasonable evidence were furnished on request prior to the execution of the Agreement, the prospective contractor would not be required to execute the Agreement or to commence the Work.]*~~

2.2.2 The Owner shall furnish surveys describing physical characteristics, legal limitations and utility locations for the site of the Project, and a legal description of the site. Information will be furnished only to the extent it is readily available to the Owner.

2.2.3 Except as provided in Subparagraph 3.7.1, or elsewhere in the Construction Documents ~~for permits and fees which are the responsibility of the Contractor under the Contract Documents,~~ the Owner shall secure and pay for necessary approvals, easements, assessments and charges required for construction, use or occupancy of permanent structures or for permanent changes in existing facilities. Unless otherwise provided under the Contract Documents, the Owner, through the Construction Manager, shall secure and pay for the building permit. Refer to Project Manual Section 00880 Regulatory Requirements and Section 00890 Permits which detail Contractor's obligations in relation to permits.

2.2.4 Information or services under the Owner's control shall be furnished by the Owner, upon request, with reasonable promptness to avoid delay in orderly progress of the Work.

2.2.5 Unless otherwise provided in the Contract Documents, the Contractor will be furnished, free of charge, such copies of Drawings and Project Manuals as are reasonably necessary for execution of the Work.

2.2.6 The Owner shall forward all communications to the Contractor through the Construction Manager and shall contemporaneously provide the same communications to the Architect.

2.2.7 The foregoing are in addition to other duties and responsibilities of the Owner enumerated herein and especially those in respect to Article 6 (Construction by Owner or by Other Contractors), Article 9 (Payments and Completion) and Article 11 (Insurance and Bonds).

© 1992 THE AMERICAN INSTITUTE OF ARCHITECTS, 1735 NEW YORK AVENUE, N.W., WASHINGTON, D.C., 20006-5292. AIA DOCUMENT A201/CMa - GENERAL CONDITIONS OF THE CONTRACT FOR CONSTRUCTION - CONSTRUCTION MANAGER-ADVISER EDITION - 1992 EDITION - AIA® - WARNING: Unlicensed photocopying violates U.S. copyright laws and will subject the violator to legal prosecution. This document was electronically produced with permission of the AIA and can be reproduced in accordance with your license without violation until the date of expiration as noted below. expiration as noted below. expiration as noted below. User Document: a201cma pe group final january 1, 2004.aia -- 1/13/2004. AIA License Number 1015952, which expires on 6/20/2004.

the Contract Documents, at law, or in equity.

2.3 OWNER'S / CONSTRUCTION MANAGER'S RIGHT TO STOP THE WORK

2.3.1 If the Contractor fails to correct Work which is not in accordance with the requirements of the Contract Documents as required by Paragraph 12.2 or persistently fails to carry out Work in accordance with the Contract Documents, the Owner or Construction Manager, ~~by written order signed personally or by an agent specifically so empowered by the Owner in writing,~~ may order the Contractor to stop the Work, or any portion thereof, until the cause for such order has been eliminated; however, the right of the Owner or Construction Manager to stop the Work shall not give rise to a duty on the part of the Owner or the Construction Manager to exercise this right for the benefit of the Contractor or any other person or entity.

2.4 OWNER'S / CONSTRUCTION MANAGER'S RIGHT TO CARRY OUT THE WORK

2.4.1 If the Contractor defaults or neglects to carry out the Work in accordance with the Contract Documents and fails within a seventy-two (72) hour period (or such lesser period as determined by Owner or Construction Manager in its discretion when grounds exist to complete the neglected or defaulted Work in a shorter time period) ~~seven day period~~ after receipt of written notice from the Owner or Construction Manager to commence and continue correction of such default or neglect with diligence and promptness, ~~the Owner may after such seven day period give the Contractor a second written notice to correct such deficiencies within a second seven day period. If the Contractor within such second seven day period after receipt of such second notice fails to commence and continue to correct any deficiencies,~~ the Owner or Construction Manager may, without prejudice to other remedies the Owner or Construction Manager may have, correct such deficiencies. In such case an appropriate Change Order shall be issued deducting from payments then or thereafter due the Contractor the cost of correcting such deficiencies, including compensation for the Construction Manager's and Architect's and their respective consultants' additional services and expenses made necessary by such default, neglect or failure. ~~Such action by the Owner and amounts charged to the Contractor are both subject to prior approval of the Architect, after consultation with the Construction Manager.~~ If payments then or thereafter due the Contractor are not sufficient to cover such amounts, the Contractor shall pay the difference to the Owner through the Construction Manager.

2.5 The rights of the Owner and Construction Manager stated in this Article 2 and elsewhere in the Contract Documents are cumulative and not in limitation of any rights of the Owner or Construction Manager granted in

ARTICLE 3
CONTRACTOR

3.1 DEFINITION

3.1.1 The Contractor is the person or entity identified as such in the Agreement and is referred to throughout this Agreement as if singular in number. The term "Contractor" means the Contractor or the Contractor's authorized representative.

3.1.2 The plural term "Contractors" refers to persons or entities who perform construction under Conditions of the Contract that are administered by the Construction Manager, and that are identical or substantially similar to these Conditions.

3.2 REVIEW OF CONTRACT DOCUMENTS AND FIELD CONDITIONS BY CONTRACTOR

3.2.1 The Contractor shall carefully study and compare the Contract Documents with each other and with information furnished by the Owner pursuant to Subparagraph 2.2.2 and shall at once report to the Construction Manager and Architect any errors, inconsistencies or omissions discovered. The Contractor shall not be liable to the Owner, Construction Manager or Architect for damage resulting from errors, inconsistencies or omissions in the Contract Documents unless the Contractor, any member of its organization, or any of its Subcontractors, recognized such error, inconsistency or omission and knowingly failed to report it to the Construction Manager and Architect before proceeding with the Work. If the Contractor performs any construction activity knowing it involves an ~~recognized~~ error, inconsistency or omission in the Contract Documents without such notice to the Construction Manager and Architect, the Contractor shall ~~assume appropriate responsibility for such performance and shall bear an appropriate amount of the attributable costs for correction.~~ correct such errors, inconsistencies, or omissions at no additional cost to the Owner.

3.2.2 The Contractor shall take field measurements and verify field conditions and shall carefully compare such field measurements and conditions and other information known to the Contractor with the Contract Documents before commencing activities. Errors, inconsistencies or omissions discovered shall be reported to the Construction Manager and Architect at once. Refer to Project Manual Section 01530 - Field Engineering and Layout, which details Contractor's responsibilities for field layout and verification.

3.2.3 The Contractor shall perform the Work in accordance with the Contract Documents and submittals approved pursuant to Paragraph 3.12.

© 1992 THE AMERICAN INSTITUTE OF ARCHITECTS, 1735 NEW YORK AVENUE, N.W., WASHINGTON, D.C., 20006-5292. AIA DOCUMENT A201/CMa - GENERAL CONDITIONS OF THE CONTRACT FOR CONSTRUCTION - CONSTRUCTION MANAGER-ADVISER EDITION - 1992 EDITION - AIA® - WARNING: Unlicensed photocopying violates U.S. copyright laws and will subject the violator to legal prosecution. This document was electronically produced with permission of the AIA and can be reproduced in accordance with your license without violation until the date of expiration as noted below. expiration as noted below. expiration as noted below. User Document: a201cma pe group final january 1, 2004.aia -- 1/13/2004. AIA License Number 1015952, which expires on 6/20/2004.

3.2.4 Except as to any reported errors, inconsistencies, or omissions, and to concealed or unknown conditions defined in Subparagraph 4.7.6, by executing the Agreement, the Contractor represents the following:

3.2.4.1 The Contract Documents are sufficiently complete and detailed for the Contractor to: (1) perform the Work required to produce the results intended by the Contract Documents; and (2) comply with all the requirements of the Contract Documents.

3.2.4.2 The Work required by the Contract Documents, including, without limitation, all construction details, construction means, methods, procedures, and techniques necessary to perform the Work, use of materials, selection of equipment, and requirements of product manufacturers are consistent with: (1) good and sound practices within the construction industry; (2) generally prevailing and accepted industry standards applicable to the Work; and (3) requirements of any warranties applicable to the Work.

3.3 SUPERVISION AND CONSTRUCTION PROCEDURES

3.3.1 The Contractor shall supervise and direct the Work, using the Contractor's best skill and attention. The Contractor shall be solely responsible for and have control over construction means, methods, techniques, sequences and procedures and for coordinating all portions of the Work under this Contract, subject to overall coordination of the Construction Manager as provided in Subparagraphs 4.6.3 and 4.6.4. The Contractor shall ensure that product suppliers, Subcontractors, and their agents and employees, perform their Work in accordance with the Contract Documents and that all products are ordered and delivered in strict accordance with the schedule. The Contractor shall coordinate its Work with that of all persons or entities on the Project site. The Contractor shall be responsible for the space requirements, locations, and routing of its equipment. In areas and locations where the proper and most effective space requirements, locations, and routing cannot be made as indicated, the Contractor shall meet with all others involved, before installation, to plan the most effective and efficient method of overall installation. A general example is equipment above corridor ceilings where ductwork, piping, conduit, lights, etc. will be installed. A thorough coordinated plan shall be used to install the equipment, to furnish proper clearances, radii of turns, locations, pipe slopes, supporting appurtenances, and access where required. Refer to Project Manual 001530 - Field Engineering and Layout.

3.3.2 The Contractor shall be fully responsible to the Owner for acts and omissions of the Contractor's employees, Subcontractors, Suppliers and their agents and employees, and any entity or other persons performing portions of the Work at any tier, directly or indirectly, under a contract with the Contractor. The Contractor shall coordinate the Work of its Subcontractors engaged in construction at the Project. Whenever interference might occur, before any Work is done at the places in question, Contractor shall consult with others and shall come to agreement with them as to the exact location and level of piping, conduits, ducts and/or other Work which might cause interference. Refer to Project Manual 001530 - Field Engineering and Layout.

3.3.3 The Contractor shall not be relieved of obligations to perform the Work in accordance with the Contract Documents either by activities or duties of the Construction Manager or Architect in their administration of the Contract, or by tests, inspections or approvals required or performed by persons other than the Contractor.

3.3.4 The Contractor shall inspect portions of the Project related to the Contractor's Work in order to determine that such portions are in proper condition to receive subsequent Work.

3.3.5 The Contractor shall be responsible for its own, its employees' and its Subcontractors' workmanship and quality of materials and every part thereof or in connection therewith against risk of any and every kind (except those covered by a Builder's Risk Policy applicable to the Project) until the final acceptance of the Work by Owner.

3.3.6 Within fifteen (15) days of award of contract, each awarded Contractor shall assemble all necessary information and data concerning its supervision and construction procedures, as identified in Project Manual Section 00200 - Instructions to Bidders. Contractor shall submit updated information from the post-bid meetings as well as the following:

3.3.6.1 A schedule of values in the format and detail as the Construction Manager may require.

3.3.6.2 Contractor's Project Safety Program.

3.3.6.3 A complete list of all items, products and layouts for which shop drawings, brochures or samples are required; a list of each Subcontractor or supplier; the date of planned submission and time period for fabrication and delivery to the jobsite after approval of the submission. The foregoing items will be provided on forms furnished by the Construction Manager. The Contractor shall thoroughly review the

© 1992 THE AMERICAN INSTITUTE OF ARCHITECTS, 1735 NEW YORK AVENUE, N.W., WASHINGTON, D.C., 20006-5292. AIA DOCUMENT A201/CMa - GENERAL CONDITIONS OF THE CONTRACT FOR CONSTRUCTION - CONSTRUCTION MANAGER-ADVISER EDITION - 1992 EDITION - AIA® - WARNING: Unlicensed photocopying violates U.S. copyright laws and will subject the violator to legal prosecution. This document was electronically produced with permission of the AIA and can be reproduced in accordance with your license without violation until the date of expiration as noted below. expiration as noted below. expiration as noted below. User Document: a201cma pe group final january 1, 2004.aia -- 1/13/2004. AIA License Number 1015952, which expires on 6/20/2004.

Project Manual and adhere to any additional instructions with regard to Submittals.

3.4 LABOR AND MATERIALS

3.4.1 Unless otherwise provided in the Contract Documents, the Contractor shall provide and pay for labor, materials, equipment, tools, construction equipment and machinery, water, heat, utilities, transportation, and other facilities and services necessary for proper execution and completion of the Work, whether temporary or permanent and whether or not incorporated or to be incorporated in the Work.

3.4.2 The Contractor shall enforce strict discipline and good order among the Contractor's employees and other persons carrying out the Contract. The Contractor shall not permit employment of unfit persons or persons not skilled in tasks assigned to them.

3.4.3 If any person employed by or under the Contractor is found in the judgment of the Construction Manager or Owner to be incompetent, disorderly, unfaithful, disobedient so far as to endanger proper fulfillment of the Contract or otherwise objectionable, such person shall, if directed by the Construction Manager, be discharged immediately and not employed again on any part of the Work without any liability to Owner or Construction Manager for such discharge.

3.5 WARRANTY

3.5.1 The Contractor warrants to the Owner, Construction Manager and Architect that materials and equipment furnished under the Contract will be of good quality and new unless otherwise required or permitted by the Contract Documents, that the Work will be free from defects not inherent in the quality required or permitted, and that the Work will conform with the requirements of the Contract Documents. Work not conforming to these requirements, including substitutions not properly approved and authorized, ~~may~~ shall be considered defective. The Contractor's warranty excludes remedy for damage or defect caused by abuse, modifications not executed by the Contractor, improper or insufficient maintenance, improper operation, or normal wear and tear under normal usage. If required by the Construction Manager or Architect, the Contractor shall furnish satisfactory evidence as to the kind and quality of materials and equipment. This warranty is not limited by the provisions of Paragraph 12.2.

3.5.2 ALL WRITTEN WARRANTIES REQUIRED BY THE CONTRACT DOCUMENTS SHALL INCLUDE LABOR AND MATERIALS AND SHALL BE SIGNED BY THE MANUFACTURER OR SUBCONTRACTOR RESPECTIVELY, AND COUNTERSIGNED BY THE CONTRACTOR. ALL WARRANTIES SHALL BE ADDRESSED TO THE OWNER AND DELIVERED TO THE ARCHITECT THROUGH THE CONSTRUCTION MANAGER UPON COMPLETION OF THE PROJECT AND BEFORE OR WITH THE SUBMISSION OF REQUEST FOR FINAL PAYMENT.

3.5.3 The Contractor agrees to assign to the Owner at the time of final completion of the Work any and all manufacturer's warranties relating to materials and labor used in the Work and further agrees to perform the Work in such manner so as to preserve any and all such manufacturer's warranties.

3.6 TAXES

3.6.1 The Contractor shall pay sales, consumer, use and similar taxes for the Work or portions thereof provided by the Contractor which are legally enacted when bids are received or negotiations concluded, whether or not yet effective or merely scheduled to go into effect.

3.7 PERMITS, FEES AND NOTICES

3.7.1 ~~Unless otherwise provided in the Contract Documents, the Owner shall secure and pay for the building permit and the Contractor shall secure and pay for all other permits and governmental fees, licenses and inspections necessary for proper execution and completion of the Work which are customarily secured after execution of the Contract and which are legally required when bids are received or negotiations concluded.~~ Refer to Project Manual: Section 00880-Regulatory Requirements and Project Manual Section 00890-Permits for a description of Contractor's obligations in relation to Permits.

3.7.2 The Contractor shall comply with and give notices required by laws, ordinances, rules and regulations and lawful orders, and all other requirements of public authorities bearing on performance of the Work. The Contractor shall procure and obtain all bonds required of the Owner or the Contractor by the municipality in which the Project is located or by any other public or private body with jurisdiction over the Project. In connection with such bonds, the Contractor shall prepare all applications, supply all necessary backup material, and furnish the surety with any required personal undertakings. The Contractor shall also obtain and pay all charges for all approvals for street closing, parking meter removal, and other similar matters as may be necessary or appropriate from time to time for the performance of the Work.

3.7.3 It is not the Contractor's responsibility to ascertain that the Contract Documents are in accordance with applicable laws, statutes, ordinances, building codes, and rules and regulations. However, if the Contractor observes that portions of the Contract Documents are at variance therewith, the Contractor shall promptly notify the Construction Manager,

© 1992 THE AMERICAN INSTITUTE OF ARCHITECTS, 1735 NEW YORK AVENUE, N.W., WASHINGTON, D.C., 20006-5292. AIA DOCUMENT A201/CMa - GENERAL CONDITIONS OF THE CONTRACT FOR CONSTRUCTION - CONSTRUCTION MANAGER-ADVISER EDITION - 1992 EDITION - AIA® - WARNING: Unlicensed photocopying violates U.S. copyright laws and will subject the violator to legal prosecution. This document was electronically produced with permission of the AIA and can be reproduced in accordance with your license without violation until the date of expiration as noted below. expiration as noted below. expiration as noted below. User Document: a201cma pe group final january 1, 2004.aia -- 1/13/2004. AIA License Number 1015952, which expires on 6/20/2004.

Architect and Owner in writing, and necessary changes shall be accomplished by appropriate Modification.

3.7.4 If the Contractor performs Work knowing it to be contrary to laws, statutes, ordinances, building codes, and rules and regulations ~~without such notice to the Construction Manager, Architect and Owner,~~ the Contractor shall assume full responsibility for such Work and shall bear the attributable costs.

3.8 ALLOWANCES

3.8.1 The Contractor shall include in the Contract Sum all allowances stated in the Contract Documents. Items covered by allowances shall be supplied for such amounts and by such persons or entities as the Owner may direct, but the Contractor shall not be required to employ persons or entities against which the Contractor makes reasonable objection.

3.8.2 Unless otherwise provided in the Contract Documents:

.1 materials and equipment under an allowance shall be selected promptly by the Owner to avoid delay in the Work;

.2 allowances shall cover the cost to the Contractor of materials and equipment delivered at the site and all required taxes, less applicable trade discounts;

.3 Contractor's costs for unloading and handling at the site, labor, installation costs, overhead, profit and other expenses contemplated for stated allowance amounts shall be included in the Contract Sum and not in the allowances;

.4 whenever costs are more than or less than allowances, the Contract Sum shall be adjusted accordingly by Change Order. ~~The amount of the Change Order shall reflect (1) the difference between actual costs and the allowances under Clause 3.8.2.2 and (2) changes in Contractor's costs under Clause 3.8.2.3.~~

3.9 SUPERINTENDENT

3.9.1 The Contractor shall employ a competent superintendent and necessary assistants who shall be in attendance at the Project site during performance of the Work. The superintendent shall represent the Contractor, and communications given to the superintendent shall be as binding as if given to the Contractor. Important communications shall be confirmed in writing. Other communications shall be similarly confirmed on written request in each case. The Contractor's superintendent and assistants shall be satisfactory to the Construction Manager and the Owner. The Contractor's superintendent shall not be replaced except with the prior consent of the Construction Manager and Owner, unless the superintendent ceases to be in the Contractor's employ. The Contractor shall maintain order and discipline among all workers involved in the Project at all times. The superintendent shall be present at the Project site at all times when Work is performed by the Contractor or its Subcontractors.

3.10 CONTRACTOR'S CONSTRUCTION SCHEDULE

3.10.1 The Contractor, promptly, and within the time set forth in Project Manual Section 00230 - Schedule and Phasing, after being awarded the Contract, shall prepare and submit for the Owner's and Architect's information and the Construction Manager's approval a Contractor's Construction Schedule for the Work. Such schedule shall not exceed time limits current under the Contract Documents, shall be revised at appropriate intervals as required by the conditions of the Work and Project, shall be related to the entire Project construction schedule ~~to the extent required by the Contract Documents~~, and shall provide for expeditious and practicable execution of the Work. Refer to Project Manual Section 00230 - Schedule and Phasing.

3.10.2 The Contractor shall cooperate with the Construction Manager in scheduling and performing the Contractor's Work to avoid conflict, delay in or interference with the Work of other Contractors or the construction or operations of the Owner's own forces. Refer to Project Manual Section 00230 - Schedule and Phasing.

3.10.3 The Contractor shall prepare and keep current, for the Construction Manager's and Architect's approval, a schedule of submittals which is coordinated with the Contractor's Construction Schedule and allows the Construction Manager and Architect reasonable time to review submittals. Refer to Project Manual 01330 - Submittals.

3.10.4 The Contractor shall conform to the most recent schedules.

3.10.5 In the event the Construction Manager or Owner determines that the performance of the Work, as of a Milestone Date, has not progressed or reached the level of completion required by the Contract Documents, the Construction Manager shall have the right to order the Contractor to take corrective measures necessary to expedite the progress of construction, including, without limitation, (1) working additional shifts or overtime; (2) supplying additional manpower, equipment, and facilities; and (3) other similar measures (referred to collectively as "Extraordinary Measures"). Such Extraordinary Measures shall continue until the progress of the Work complies with the stage of completion required by the Contract Documents. The Construction Manager or Owner's right to require Extraordinary Measures is solely for the purpose of ensuring the Contractor's compliance

© 1992 THE AMERICAN INSTITUTE OF ARCHITECTS, 1735 NEW YORK AVENUE, N.W., WASHINGTON, D.C., 20006-5292. AIA DOCUMENT A201/CMa - GENERAL CONDITIONS OF THE CONTRACT FOR CONSTRUCTION - CONSTRUCTION MANAGER-ADVISER EDITION - 1992 EDITION - AIA® - WARNING: Unlicensed photocopying violates U.S. copyright laws and will subject the violator to legal prosecution. This document was electronically produced with permission of the AIA and can be reproduced in accordance with your license without violation until the date of expiration as noted below. expiration as noted below. expiration as noted below. User Document: a201cma pe group final january 1, 2004.aia -- 1/13/2004. AIA License Number 1015952, which expires on 6/20/2004.

with the schedule. Failure to order Extraordinary Measures shall not excuse late completion.

3.10.5.1 The Contractor shall not be entitled to an adjustment in the Contract Sum in connection with Extraordinary Measures required by the Construction Manager or Owner under or pursuant to this Subparagraph 3.10.5.

3.10.5.2 The Construction Manager or Owner may exercise the rights furnished the Owner under or pursuant to this Subparagraph 3.10.5 as frequently as the Construction Manager or Owner deems necessary to ensure that the Contractor's performance of the Work will comply with any Milestone Date or completion date set forth in the Contract Documents.

3.10.6 The Construction Manager or Owner shall have the right to direct a postponement or rescheduling of any date or time for the performance of any part of the Work that may interfere with the operations of other contractors or of the Owner's premises or any of the Owner's tenants or invitees. The Contractor shall, upon the Construction Manager's or Owner's request, schedule any portion of the Work affecting other contractors or other operation of the premises during hours when the premises are not in operation. Any postponement, rescheduling, or performance of the Work under this Subparagraph 3.10.6 may be grounds for an extension of the Contract Time, if permitted under Paragraph 8.3, and an equitable adjustment in the Contract Sum if (1) the performance of the Work was properly scheduled by the Contractor in compliance with the requirements of the Contract Documents, and (2) such rescheduling or postponement is required for the convenience of the Owner.

3.11 DOCUMENTS AND SAMPLES AT THE SITE

3.11.1 The Contractor shall maintain at the site for the Owner one record copy of the Drawings, Specifications, addenda, Change Orders and other Modifications, in good order and marked currently to record changes and selections made during construction, and in addition approved Shop Drawings, Product Data, Samples and similar required submittals. These shall be available to the Construction Manager and Architect and shall be delivered to the Construction Manager for submittal to the Owner upon completion of the Work. The Contractor shall advise the Construction Manager on a current basis of all changes in the Work made during construction. Refer to Project Manual Section 01320 - Communications, Section 01700 - Contract Close Out, and Section 01720 - Project Record Documents.

3.12 SHOP DRAWINGS, PRODUCT DATA AND SAMPLES

3.12.1 Shop Drawings are drawings, diagrams, schedules and other data specially prepared for the Work by the Contractor or a Subcontractor, Sub-subcontractor, manufacturer, supplier or distributor to illustrate some portion of the Work.

3.12.2 Product Data are illustrations, standard schedules, performance charts, instructions, brochures, diagrams and other information furnished by the Contractor to illustrate materials or equipment for some portion of the Work.

3.12.3 Samples are physical examples which illustrate materials, equipment or workmanship and establish standards by which the Work will be judged.

3.12.4 Shop Drawings, Product Data, Samples and similar submittals are not Contract Documents. The purpose of their submittal is to demonstrate for those portions of the Work for which submittals are required the way the Contractor proposes to conform to the information given and the design concept expressed in the Contract Documents. Review by the Architect is subject to the limitations of Subparagraph 4.6.12.

3.12.5 Within seven (7) days after award of Contract, the Contractor shall submit to Construction Manager a submittal register as set forth in Project Manual Section 01330 - Submittals. The Contractor shall review, approve and submit to the Construction Manager, in accordance with the schedule and sequence approved by the Construction Manager, and in a manner calculated to cause no delay in Contractor's Work or the Work of Owner or other Contractor. Shop Drawings, Product Data, Samples, brochures and similar submittals required by the Contract Documents. The Contractor shall cooperate with the Construction Manager in the coordination of the Contractor's Shop Drawings, Product Data, Samples and similar submittals with related documents submitted by other Contractors. Submittals made by the Contractor which are not required by the Contract Documents may be returned without action.

3.12.6 The Contractor shall perform no portion of the Work requiring submittal and review of Shop Drawings, Product Data, Samples or similar submittals until the respective submittal has been approved by the Construction Manager and Architect. Such Work shall be in accordance with approved submittals.

3.12.7 By approving and submitting Shop Drawings, Product Data, Samples and similar submittals, the Contractor represents that the Contractor has determined and verified materials, field measurements and field construction criteria related thereto, or will do so, and has checked and coordinated the information contained within such submittals with the requirements of the Work and of the Contract Documents.

3.12.8 The Contractor shall not be relieved of responsibility for deviations from requirements of the Contract Documents

© 1992 THE AMERICAN INSTITUTE OF ARCHITECTS, 1735 NEW YORK AVENUE, N.W., WASHINGTON, D.C., 20006-5292. AIA DOCUMENT A201/CMa - GENERAL CONDITIONS OF THE CONTRACT FOR CONSTRUCTION - CONSTRUCTION MANAGER-ADVISER EDITION - 1992 EDITION - AIA® - WARNING: Unlicensed photocopying violates U.S. copyright laws and will subject the violator to legal prosecution. This document was electronically produced with permission of the AIA and can be reproduced in accordance with your license without violation until the date of expiration as noted below. expiration as noted below. expiration as noted below. User Document: a201cma pe group final january 1, 2004.aia – 1/13/2004. AIA License Number 1015952, which expires on 6/20/2004.

by the Construction Manager's and Architect's review or approval of Shop Drawings, Product Data, Samples or similar submittals unless the Contractor has specifically informed the Construction Manager and Architect in writing of such deviation at the time of submittal and the Construction Manager and Architect have given written approval to the specific deviation. The Contractor shall not be relieved of responsibility for errors or omissions in Shop Drawings, Product Data, Samples or similar submittals by the Construction Manager's and Architect's approval thereof.

3.12.9 The Contractor shall direct specific attention, in writing or on resubmitted Shop Drawings, Product Data, Samples or similar submittals, to revisions other than those requested by the Construction Manager and Architect on previous submittals.

3.12.10 Informational submittals upon which the Construction Manager and Architect are not expected to take responsive action may be so identified in the Contract Documents.

3.12.11 When professional certification of performance criteria of materials, systems or equipment is required by the Contract Documents, the Construction Manager and Architect shall be entitled to rely upon the accuracy and completeness of such calculations and certifications. Refer to Project Manual Section 01330 - Submittals and Architect's technical specifications for specific instructions regarding Contractor's submittal requirements.

3.13 USE OF SITE

3.13.1 The Contractor shall confine operations at the site to areas permitted by law, ordinances, permits and the Contract Documents and shall not unreasonably encumber the site with materials or equipment.

3.13.2 The Contractor shall coordinate the Contractor's operations with, and secure the approval of, the Construction Manager before using any portion of the site.

3.13.3 Only materials and equipment that are to be used directly in the Work shall be brought and stored on the Project Site by the Contractor. After equipment is no longer required for the Work, it shall be promptly removed from the Project site. Protection of construction materials and equipment stored at the Project site from weather, theft, damage, and all other adversity is solely the Contractor's responsibility.

3.13.4 The Contractor and any entity the Contractor is responsible for shall not erect any sign on the Project site without the Owner's prior written consent, which may be withheld in the Owner's sole discretion.

3.13.5 The Contractor shall ensure that the Work, at all times, is performed in a manner that affords reasonable access, both vehicular and pedestrian, to the site of the Work and all adjacent areas. The Work shall be performed, to the fullest extent possible, in such a manner that public areas adjacent to the site of the Work shall be free from all debris, building materials, and equipment. Without limitation of any other provision of the Contract Documents, the Contractor shall minimize any interference with the occupancy or beneficial use of any areas in buildings adjacent to the site of the Work or the premises in the event of partial occupancy, as more specifically described in Paragraph 9.9.

3.13.6 The Contractor shall not permit any workers to use any existing facilities at the Project site, including, without limitation, lavatories, toilets, entrances, and parking areas other than those designated by the Owner. Without limitation of any other provision of the Contract Documents, the Contractor shall use its best efforts to comply with all rules and regulations promulgated by the Owner in connection with the use and occupancy of the Project site, as amended from time to time. The Contractor shall immediately notify the Construction Manager and Owner in writing if during the performance of the Work the Contractor finds compliance with any portion of such rules and regulations to be impracticable. The Contractor's notice shall set forth the specific issues with such compliance and suggest alternatives under which the same results intended by the rules and regulations may be achieved. The Owner may in such a circumstance, in the Owner's sole discretion, adopt such suggestions, develop new alternatives or require compliance with the existing requirements of the rules and regulations. The Contractor shall also comply with all insurance requirements and collective bargaining agreements applicable to use and occupancy of the Project site. Refer to Project Manual Section 01140 - Use of Premises for a complete description of Contractor's obligations regarding use of the site.

3.14 CUTTING AND PATCHING

3.14.1 The Contractor shall be responsible for cutting, fitting or patching required to complete the Work or to make its parts fit together properly.

3.14.2 The Contractor shall not damage or endanger a portion of the Work or fully or partially completed construction of the Owner's own forces or of other Contractors by cutting, patching, excavating or otherwise altering such construction. The Contractor shall not cut or otherwise alter such construction by other Contractors or by the Owner's own forces except with written consent of the Construction Manager, Owner and such other Contractors; such consent shall not be unreasonably withheld. The Contractor shall not

© 1992 THE AMERICAN INSTITUTE OF ARCHITECTS, 1735 NEW YORK AVENUE, N.W., WASHINGTON, D.C., 20006-5292. AIA DOCUMENT A201/CMa - GENERAL CONDITIONS OF THE CONTRACT FOR CONSTRUCTION - CONSTRUCTION MANAGER-ADVISER EDITION - 1992 EDITION - AIA® - WARNING: Unlicensed photocopying violates U.S. copyright laws and will subject the violator to legal prosecution. This document was electronically produced with permission of the AIA and can be reproduced in accordance with your license without violation until the date of expiration as noted below. expiration as noted below. expiration as noted below. User Document: a201cma pe group final january 1, 2004.aia – 1/13/2004. AIA License Number 1015952, which expires on 6/20/2004.

unreasonably withhold from the other Contractors or the Owner the Contractor's consent to cutting or otherwise altering the Work.

3.14.3 See technical specifications for further requirements.

13.5 CLEANING UP

13.5.1 The Contractor shall keep the premises and surrounding area free from accumulation of waste materials or rubbish caused by operations under the Contract. At completion of the Work the Contractor shall remove from and about the Project waste materials, rubbish, the Contractor's tools, construction equipment, machinery and surplus materials.

3.15.2 If the Contractor fails to clean up as provided in the Contract Documents, the Construction Manager may do so with the Owner's approval and the cost thereof shall be charged to the Contractor. Refer to Project Manual Section 01550 - Cleaning Up and Final Cleaning.

3.16 ACCESS TO WORK

3.16.1 The Contractor shall provide the Owner, Construction Manager and Architect access to the Work in preparation and progress wherever located.

3.17 ROYALTIES AND PATENTS

3.17.1 The Contractor shall pay all royalties and license fees. The Contractor shall defend suits or claims for infringement of patent rights and shall hold the Owner, Construction Manager and Architect harmless from loss on account thereof, but shall not be responsible for such defense or loss when a particular design, process or product of a particular manufacturer or manufacturers is required by the Contract Documents. However, if the Contractor has reason to believe that the required design, process or product is an infringement of a patent, the Contractor shall be responsible for such loss unless such information is promptly furnished to the Architect and Construction Manager.

3.18 INDEMNIFICATION

3.18.1 ~~To the fullest extent permitted by law, the Contractor shall indemnify and hold harmless the Owner, Construction Manager, Architect, Construction Manager's and Architect's consultants, and agents and employees of any of them from and against claims, damages, losses and expenses, including but not limited to attorneys' fees, arising out of or resulting from performance of the Work, provided that such claim, damage, loss or expense is attributable to bodily injury, sickness, disease or death, or to injury to or destruction of tangible property (other than the Work itself) including loss of use resulting therefrom, but only to the extent caused in whole or in part by negligent acts or omissions of the Contractor, a Subcontractor, anyone directly or indirectly employed by them or anyone for whose acts they may be liable, regardless of whether or not such claim, damage, loss or expense is caused in part by a party indemnified hereunder. Such obligation shall not be construed to negate, abridge or reduce other rights or obligations of indemnity which would otherwise exist as to a party or person described in this Paragraph 3.18.~~

To the fullest extent permitted by law, the Contractor shall defend, indemnify, and hold harmless the Owner, Architect and Construction Manager, and their respective agents, representatives, employees, officers, affiliates, and successors (collectively, "Indemnitees") from and against any and all claims, demands, liabilities, causes of action, costs, and expenses, including reasonable attorney fees and litigation expenses (collectively "Indemnification Claims"), involving:

(a) personal injury or death of any person;
(b) property damage (including loss of use);
(c) the breach of any provision in the Owner-Contractor Agreement;
(d) money claims by subcontractors, suppliers or any entity involved in the Work at any tier;
(e) any contractual duty of an Indemnitee to indemnify another person; or
(f) the enforcement by an Indemnitee of its rights under this provision;

but only if such Indemnification Claims arise from or relate directly or indirectly to the Work under the Contract by, or the acts or omissions of: (i) the Contractor; (ii) its subcontractors, vendors or suppliers at any tier, or (iii) any persons for whom any of them are responsible, including their employees, agents, officers, or representatives. In any event, the obligations contained in Subparagraph 3.18.1 shall not apply to an Indemnification Claim resulting from the sole negligence of an Indemnitee.

3.18.2 In claims against any person or entity indemnified under this Paragraph 3.18 by an employee of the Contractor, a Subcontractor, anyone directly or indirectly employed by them or anyone for whose acts they may be liable, the indemnification obligation under this Paragraph 3.18 shall not be limited by a limitation on amount or type of damages, compensation or benefits payable by or for the Contractor or a Subcontractor under workers' compensation acts, disability benefit acts or other employee benefit acts.

3.18.3 The obligations of the Contractor under this Paragraph 3.18 shall not extend to the liability of the ~~Construction Manager,~~ Architect, ~~their~~ its consultants, and agents and employees of any of them arising out of ~~(1)~~ the preparation or approval of maps, drawings, opinions, reports, surveys, Change Orders, designs or specifications, ~~or (2) the~~ giving of or the failure to give directions or instructions by the ~~Construction Manager, Architect, their consultants, and agents~~

© 1992 THE AMERICAN INSTITUTE OF ARCHITECTS, 1735 NEW YORK AVENUE, N.W., WASHINGTON, D.C., 20006-5292. AIA DOCUMENT A201/CMa - GENERAL CONDITIONS OF THE CONTRACT FOR CONSTRUCTION - CONSTRUCTION MANAGER-ADVISER EDITION - 1992 EDITION - AIA® - WARNING: Unlicensed photocopying violates U.S. copyright laws and will subject the violator to legal prosecution. This document was electronically produced with permission of the AIA and can be reproduced in accordance with your license without violation until the date of expiration as noted below. expiration as noted below. expiration as noted below. User Document: a201cma pe group final january 1, 2004.aia -- 1/13/2004. AIA License Number 1015952, which expires on 6/20/2004.

~~and employees of any of them provided such giving or failure to give is the primary cause of the injury or damage.~~

3.18.4 In the event that any claim is made or asserted, or lawsuit filed for damages or injury arising out of or resulting from the performance of the Work, whether or not the Owner or Construction Manager is named as a party, the Contractor shall immediately advise the Owner and Construction Manager, in writing, of such claim or lawsuit, and shall provide a full and complete copy of any documents or pleadings relating thereto, as well as a full and accurate report of the facts involved.

3.18.5 An Indemnitee, at its option, may select counsel to defend any claim, cause of action or lawsuit brought against it without impairing any obligation of Contractor to provide indemnification.

ARTICLE 4
ADMINISTRATION OF THE CONTRACT

4.1 ARCHITECT

4.1.1 The Architect is the person lawfully licensed to practice architecture or an entity lawfully practicing architecture identified as such in the Agreement and is referred to throughout the Contract Documents as if singular in number. The term "Architect" means the Architect or the Architect's authorized representative.

4.2 CONSTRUCTION MANAGER

4.2.1 The Construction Manager is the person or entity identified as such in the Agreement and is referred to throughout the Contract Documents as if singular in number. The term "Construction Manager" means the Construction Manager or the Construction Manager's authorized representative.

4.2.1.1 The Construction Manager shall act as the Owner's agent for purposes of administering and enforcing the Contract.

4.3 Duties, responsibilities and limitations of authority of the Construction Manager and Architect as set forth in the Contract Documents shall not be restricted, modified or extended without written consent of the Owner, Construction Manager, Architect and Contractor. Consent shall not be unreasonably withheld.

4.4 In case of termination of employment of the Construction Manager or Architect, the Owner shall appoint a construction manager or architect against whom the Contractor makes no reasonable objection and whose status under the Contract Documents shall be that of the former construction manager or architect, respectively.

4.5 Disputes arising under Paragraphs 4.3 and 4.4 shall be subject to arbitration.

4.6 ADMINISTRATION OF THE CONTRACT

4.6.1 The Construction Manager and Architect will provide administration of the Contract as described in the Contract Documents, and will be the Owner's representatives (1) during construction, (2) until final payment is due and (3) with the Owner's concurrence, from time to time during the correction period described in Paragraph 12.2. All instructions to the Contractor shall be forwarded through the Construction Manager. The Construction Manager and Architect will advise and consult with the Owner and will have authority to act on behalf of the Owner only to the extent provided in the Contract Documents, unless otherwise modified by written instrument in accordance with other provisions of the Contract.

4.6.2 The Construction Manager will determine in general that the Work is being performed in accordance with the requirements of the Contract Documents, will keep the Owner informed of the progress of the Work, and will endeavor to guard the Owner against defects and deficiencies in the Work.

4.6.3 The Construction Manager will provide for coordination of the activities of other Contractors and of the Owner's own forces with the Work of the Contractor, who shall cooperate with them. The Contractor shall participate with other Contractors and the Construction Manager and Owner in reviewing their construction schedules when directed to do so. The Contractor shall make any revisions to the construction schedule as set forth in Paragraph 3.10.~~deemed necessary after a joint review and mutual agreement. The construction schedules shall constitute the schedules to be used by the Contractor, other Contractors, the Construction Manager and the Owner until subsequently revised.~~

4.6.4 The Construction Manager will schedule and coordinate the activities of the Contractors in accordance with the latest approved Project construction schedule.

4.6.5 The Architect will visit the site at intervals appropriate to the stage of construction to become generally familiar with the progress and quality of the completed Work and to determine in general if the Work is being performed in a manner indicating that the Work, when completed, will be in accordance with the Contract Documents. However, the Architect will not be required to make exhaustive or continuous on-site inspections to check quality or quantity of the Work. On the basis of on-site observations as an architect, the Architect will keep the Owner informed of progress of the Work, and will endeavor to guard the Owner against defects and deficiencies in the Work.

4.6.6 The Construction Manager, ~~except to the extent required by Subparagraph 4.6.4,~~ and Architect will not have control over or charge of and will not be responsible for construction means, methods, techniques, sequences or

© 1992 THE AMERICAN INSTITUTE OF ARCHITECTS, 1735 NEW YORK AVENUE, N.W., WASHINGTON, D.C., 20006-5292. AIA DOCUMENT A201/CMa - GENERAL CONDITIONS OF THE CONTRACT FOR CONSTRUCTION - CONSTRUCTION MANAGER-ADVISER EDITION - 1992 EDITION - AIA® - WARNING: Unlicensed photocopying violates U.S. copyright laws and will subject the violator to legal prosecution. This document was electronically produced with permission of the AIA and can be reproduced in accordance with your license without violation until the date of expiration as noted below. expiration as noted below. expiration as noted below. User Document: a201cma pe group final january 1, 2004.aia -- 1/13/2004. AIA License Number 1015952, which expires on 6/20/2004.

procedures, or for safety precautions and programs in connection with the Work, since these are solely the Contractor's responsibility as provided in Paragraph 3.3, and neither will be responsible for the Contractor's failure to carry out the Work in accordance with the Contract Documents. Neither the Construction Manager nor the Architect will have control over or charge of or be responsible for acts or omissions of the Contractor, Subcontractors, or their agents or employees, or of any other persons performing portions of the Work.

4.6.6.1 The Architect, the Owner and the Construction Manager shall at all times have access to the Work wherever it is in preparation and progress. The Contractor shall provide facilities for such access so that the Architect and the Construction Manager may perform their functions under the Contract Documents.

4.6.7 Communications Facilitating Contract Administration. Except as otherwise provided in the Contract Documents or when direct communications have been specially authorized, the Owner and Contractor shall communicate through the Construction Manager, and shall contemporaneously provide the same communications to the Architect. Communications by and with the Architect's consultants shall be through the Architect. Communications by and with Subcontractors and material suppliers shall be through the Contractor. Communications by and with other Contractors shall be through the Construction Manager and shall be contemporaneously provided to the Architect.

4.6.8 The Construction Manager will review and certify all Applications for Payment by the Contractor, including final payment. The Construction Manager will assemble each of the Contractor's Applications for Payment with similar Applications from other Contractors into a Project Application and Project Certificate for Payment. After reviewing and certifying the amounts due the Contractors, the Construction Manager will submit the Project Application and Project Certificate for Payment, along with the applicable Contractors' Applications and Certificates for Payment, to the Architect.

4.6.9 Based on the Architect's observations and evaluations of Contractors' Applications for Payment, and the certifications of the Construction Manager, the Architect will review and certify the amounts due the Contractors and will issue a Project Certificate for Payment.

4.6.10 The Architect will have authority to reject Work which does not conform to the Contract Documents, and to require additional inspection or testing, in accordance with Subparagraphs 13.5.2 and 13.5.3, whether or not such Work is fabricated, installed or completed, but will take such action only after notifying the Construction Manager. Subject to review by the Architect, the Construction Manager will have the authority to reject Work which does not conform to the Contract Documents. Whenever the Construction Manager considers it necessary or advisable for implementation of the intent of the Contract Documents, the Construction Manager will have authority to require additional inspection or testing of the Work in accordance with Subparagraphs 13.5.2 and 13.5.3, whether or not such Work is fabricated, installed or completed. The foregoing authority of the Construction Manager will be subject to the provisions of Subparagraphs 4.6.18 through 4.6.20 inclusive, with respect to interpretations and decisions of the Architect. However, neither the Architect's nor the Construction Manager's authority to act under this Subparagraph 4.6.10 nor a decision made by either of them in good faith either to exercise or not to exercise such authority shall give rise to a duty or responsibility of the Architect or the Construction Manager to the Contractor, Subcontractors, material and equipment suppliers, their agents or employees, or other persons performing any of the Work.

4.6.11 The Construction Manager will receive from the Contractor and review ~~and approve~~ all Shop Drawings, Product Data and Samples, coordinate them with information contained in related documents received from other Contractors, and transmit to the Architect those recommended for approval. The Construction Manager's actions will be taken with such reasonable promptness as to cause no delay in the Work of the Contractor or in the activities of other Contractors, the Owner, or the Architect.

4.6.12 The Architect will review and approve or take other appropriate action upon the Contractor's submittals such as Shop Drawings, Product Data and Samples, but only for the limited purpose of checking for conformance with information given and the design concept expressed in the Contract Documents. The Architect's action will be taken with such reasonable promptness as to cause no delay in the Work of the Contractor or in the activities of the other Contractors, the Owner, or the Construction Manager, while allowing sufficient time in the Architect's professional judgment to permit adequate review. Review of such submittals is not conducted for the purpose of determining the accuracy and completeness of other details such as dimensions and quantities, or for substantiating instructions for installation or performance of equipment or systems, all of which remain the responsibility of the Contractor as required by the Contract Documents. The Architect's review of the Contractor's submittals shall not relieve the Contractor of the obligations under Paragraphs 3.3, 3.5 and 3.12. The Architect's review shall not constitute approval of safety precautions or, unless otherwise specifically stated by the Architect, of any construction means, methods, techniques, sequences or procedures. The Architect's approval of a specific item shall not indicate approval of an assembly of which the item is a component.

4.6.13 The Construction Manager will prepare Change Orders and Notices to Proceed~~Construction Change Directives~~.

4.6.14 Following consultation with the Construction Manager, the Architect will take appropriate action on Change Orders or Notice to Proceed~~Construction Change Directives~~ in accordance with Article 7 and will have authority to order minor changes in the Work as provided in Paragraph 7.4.

© 1992 THE AMERICAN INSTITUTE OF ARCHITECTS, 1735 NEW YORK AVENUE, N.W., WASHINGTON, D.C., 20006-5292. AIA DOCUMENT A201/CMa - GENERAL CONDITIONS OF THE CONTRACT FOR CONSTRUCTION - CONSTRUCTION MANAGER-ADVISER EDITION - 1992 EDITION - AIA® - WARNING: Unlicensed photocopying violates U.S. copyright laws and will subject the violator to legal prosecution. This document was electronically produced with permission of the AIA and can be reproduced in accordance with your license without violation until the date of expiration as noted below. expiration as noted below. expiration as noted below. User Document: a201cma pe group final january 1, 2004.aia -- 1/13/2004. AIA License Number 1015952, which expires on 6/20/2004.

4.6.15 The Construction Manager will maintain at the site for the Owner one record copy of all Contracts, Drawings, Specifications, addenda, Change Orders and other Modifications, in good order and marked currently to record all changes and selections made during construction, and in addition approved Shop Drawings, Product Data, Samples and similar required submittals. These will be available to the Architect and the Contractor, and will be delivered to the Owner upon completion of the Project.

4.6.16 The Construction Manager will assist the Architect in conducting inspections to determine the dates of Substantial Completion and final completion, and will receive and forward to the Architect written warranties and related documents required by the Contract and assembled by the Contractor. The Construction Manager will forward to the Architect a final Project Application and Project Certificate for Payment upon compliance with the requirements of the Contract Documents.

4.6.17 If the Owner and Architect agree, the Architect will provide one or more project representatives to assist in carrying out the Architect's responsibilities at the site. The duties, responsibilities and limitations of authority of such project representatives shall be as set forth in an exhibit to be incorporated in the Contract Documents.

4.6.18 The Architect will interpret and decide matters concerning performance under and requirements of the Contract Documents on written request of the Construction Manager, Owner or Contractor. Any such requests by the Contractor shall be submitted through the Construction Manager. The Architect's response to such requests will be made with reasonable promptness and within any time limits agreed upon. If no agreement is made concerning the time within which interpretations required of the Architect shall be furnished in compliance with this Paragraph 4.6, then delay shall not be recognized on account of failure by the Architect to furnish such interpretations until 15 days after written request is made for them.

4.6.19 Interpretations and decisions of the Architect will be consistent with the intent of and reasonably inferable from the Contract Documents and will be in writing or in the form of drawings. When making such interpretations and decisions, the Architect will endeavor to secure faithful performance by both Owner and Contractor, will not show partiality to either and will not be liable for results of interpretations or decisions so rendered in good faith.

4.6.20 The Architect's decisions on matters relating to aesthetic effect will be final if consistent with the intent expressed in the Contract Documents.

4.7 CLAIMS AND DISPUTES

4.7.1 Definition. A Claim is a demand or assertion by one of the parties seeking, as a matter of right, adjustment or interpretation of Contract terms, payment of money, extension of time or other relief with respect to the terms of the Contract. The term "Claim" also includes other disputes and matters in question between the Owner and Contractor arising out of or relating to the Contract. Claims must be made by written notice. The responsibility to substantiate Claims shall rest with the party making the Claim.

4.7.2 Decision of Architect. Claims, including those alleging an error or omission by the Construction Manager or Architect, shall be referred initially to the Architect through the Construction Manager for action as provided in Paragraph 4.8. A decision by the Architect, after consultation with the Construction Manager, as provided in Subparagraph 4.8.4, shall be required as a condition precedent to arbitration or litigation of a Claim between the Contractor and Owner as to all such matters arising prior to the date final payment is due, regardless of (1) whether such matters relate to execution and progress of the Work or (2) the extent to which the Work has been completed. The decision by the Architect in response to a Claim shall not be a condition precedent to arbitration or litigation in the event (1) the position of Architect is vacant, (2) the Architect has not received evidence or has failed to render a decision within agreed time limits, (3) the Architect has failed to take action required under Subparagraph 4.8.4 within 30 days after the Claim is made, (4) 45 days have passed after the Claim has been referred to the Architect or (5) the Claim relates to a mechanic's lien.

4.7.3 Time Limits on Claims. Claims by ~~either party~~Contractor must be made within 21 days after occurrence of the event giving rise to such Claim or within 21 days after the ~~claimant~~Contractor first recognizes the condition giving rise to the Claim, whichever is later, provided, however, that the Contractor shall use its best efforts to furnish the Construction Manager, Architect, and the Owner, as expeditiously as possible, with notice of any Claim, including, without limitation, those in connection with concealed or unknown conditions, as soon as such Claim is recognized. Contractor shall cooperate with the Construction Manager, Architect, and the Owner in any effort to mitigate the alleged or potential damages, delay, or other adverse consequences arising out of the condition that is the cause of the Claim. Claims must be made by written notice. An additional Claim made after the initial Claim has been implemented by Change Order will not be considered unless submitted in a timely manner.

4.7.4 Continuing Contract Performance. Pending final resolution of a Claim including arbitration, unless otherwise agreed in writing the Contractor shall proceed diligently with performance of the Contract and the Owner shall continue to make payments in accordance with the Contract Documents.

4.7.5 Waiver of Claims: Final Payment. The making of final payment shall constitute a waiver of Claims by the Owner except those arising from:

© 1992 THE AMERICAN INSTITUTE OF ARCHITECTS, 1735 NEW YORK AVENUE, N.W., WASHINGTON, D.C., 20006-5292. AIA DOCUMENT A201/CMa - GENERAL CONDITIONS OF THE CONTRACT FOR CONSTRUCTION - CONSTRUCTION MANAGER-ADVISER EDITION - 1992 EDITION - AIA® - WARNING: Unlicensed photocopying violates U.S. copyright laws and will subject the violator to legal prosecution. This document was electronically produced with permission of the AIA and can be reproduced in accordance with your license without violation until the date of expiration as noted below. expiration as noted below. expiration as noted below. User Document: a201cma pe group final january 1, 2004.aia -- 1/13/2004. AIA License Number 1015952, which expires on 6/20/2004.

.1 liens, Claims, security interests or encumbrances arising out of the Contract and unsettled;

.2 failure of the Work to comply with the requirements of the Contract Documents; or

.3 ~~terms of special~~ warranties required by the Contract Documents.

4.7.6 Claims for Concealed or Unknown Conditions. If conditions are encountered at the site which are (1) subsurface or otherwise concealed physical conditions which differ materially from those indicated in the Contract Documents or (2) unknown physical conditions of an unusual nature, which differ materially from those ordinarily found to exist and generally recognized as inherent in construction activities of the character provided for in the Contract Documents, then notice by the observing party shall be given to the other party promptly before conditions are disturbed and in no event later than 21 days after first observance of the conditions. The Architect and Construction Manager will promptly investigate such conditions and, if they differ materially and cause an increase or decrease in the Contractor's cost of, or time required for, performance of any part of the Work, will recommend an equitable adjustment in the Contract Sum or Contract Time, or both. If the Architect determines after consultation with the Construction Manager that the conditions at the site are not materially different from those indicated in the Contract Documents and that no change in the terms of the Contract is justified, the Architect shall so notify the Owner and Contractor through the Construction Manager in writing, stating the reasons. Claims by either party in opposition to such determination must be made within 21 days after the Architect has given notice of the decision. If the Owner and Contractor cannot agree on an adjustment in the Contract Sum or Contract Time, the adjustment shall be referred to the Architect for initial determination, subject to further proceedings pursuant to Paragraph 4.8. No adjustment in the Contract Time or Contract Sum shall be permitted, however, in connection with a concealed or unknown condition that does not differ materially from those conditions disclosed or that reasonably should have been disclosed by the Contractor's prior inspections, tests, reviews, and preconstruction services for the Project, or inspections, tests, reviews, and preconstruction services that the Contractor had the opportunity to make or should have performed in connection with the Project in the exercise of the care and skill required of the Contractor by the Contract Documents.

4.7.7 Claims for Additional Cost. If the Contractor wishes to make Claim for an increase in the Contract Sum, written notice as provided herein shall be given before proceeding to execute the Work. Prior notice is not required for Claims relating to an emergency endangering life or property arising under Paragraph 10.3. If the Contractor believes additional cost is involved for reasons including but not limited to (1) a written interpretation from the Architect, (2) an order by the Owner to stop the Work where the Contractor was not at fault, (3) a written order for a minor change in the Work issued by the Architect, (4) failure of payment by the Owner, (5) termination of the Contract by the Owner, (6) Owner's suspension or (7) other reasonable grounds, Claim shall be filed in accordance with the procedure established herein.

4.7.8 Claims for Additional Time.

4.7.8.1 If the Contractor wishes to make Claim for an increase in the Contract Time, written notice as provided herein shall be given. The Contractor's Claim shall include an estimate of cost and of probable effect of delay on progress of the Work. In the case of a continuing delay only one Claim is necessary.

4.7.8.2 If adverse weather conditions are the basis for a Claim for additional time, such Claim shall be documented by data substantiating that weather conditions were abnormal for the period of time and could not have been reasonably anticipated, and that weather conditions had an adverse effect on the scheduled construction.

4.7.9 Injury or Damage to Person or Property. If either party to the Contract suffers injury or damage to person or property because of an act or omission of the other party, of any of the other party's employees or agents, or of others for whose acts such party is legally liable, written notice of such injury or damage, whether or not insured, shall be given to the other party within a reasonable time not exceeding 21 days after first observance. The notice shall provide sufficient detail to enable the other party to investigate the matter. If a Claim for additional cost or time related to this Claim is to be asserted, it shall be filed as provided in Subparagraphs 4.7.7 or 4.7.8.

4.8 RESOLUTION OF CLAIMS AND DISPUTES

4.8.1 The Architect will review with the Construction Manager Claims and take one or more of the following preliminary actions within ten days of its receipt of a Claim: (1) request additional supporting data from the claimant, (2) submit a schedule to the parties indicating when the Architect expects to take action, (3) reject the Claim in whole or in part, stating reasons for rejection, (4) recommend approval of the Claim by the other party or (5) suggest a compromise. The Architect may also, but is not obligated to, notify the surety, if any, of the nature and amount of the Claim.

4.8.2 If a Claim has been resolved, the Architect will prepare or obtain appropriate documentation.

4.8.3 If a Claim has not been resolved, the party making the Claim shall, within ten days after the Architect's preliminary response, take one or more of the following actions: (1) submit additional supporting data requested by the Architect, (2) modify the initial Claim or (3) notify the Architect that the initial Claim stands.

© 1992 THE AMERICAN INSTITUTE OF ARCHITECTS, 1735 NEW YORK AVENUE, N.W., WASHINGTON, D.C., 20006-5292. AIA DOCUMENT A201/CMa - GENERAL CONDITIONS OF THE CONTRACT FOR CONSTRUCTION - CONSTRUCTION MANAGER-ADVISER EDITION - 1992 EDITION - AIA® - WARNING: Unlicensed photocopying violates U.S. copyright laws and will subject the violator to legal prosecution. This document was electronically produced with permission of the AIA and can be reproduced in accordance with your license without violation until the date of expiration as noted below. expiration as noted below. expiration as noted below. User Document: a201cma pe group final january 1, 2004.aia -- 1/13/2004. AIA License Number 1015952, which expires on 6/20/2004.

4.8.4 If a Claim has not been resolved after consideration of the foregoing and of further evidence presented by the parties or requested by the Architect, the Architect will notify the parties in writing that the Architect's decision will be made within seven days, which decision shall be final and binding on the parties but subject to arbitration. Upon expiration of such time period, the Architect will render to the parties the Architect's written decision relative to the Claim, including any change in the Contract Sum or Contract Time or both. If there is a surety and there appears to be a possibility of a Contractor's default, the ~~Architect~~ Construction Manager may, but is not obligated to, notify the surety and request the surety's assistance in resolving the controversy.

4.9 ARBITRATION

4.9.1 Controversies and Claims Subject to Arbitration. Unless otherwise provided in the Agreement between Owner and Contractor or in the Supplementary Conditions, ~~A~~any controversy or Claim arising out of or related to the Contract, or the breach thereof, shall be settled by arbitration in accordance with the Construction Industry Arbitration Rules of the American Arbitration Association, and judgment upon the award rendered by the arbitrator or arbitrators may be entered in any court having jurisdiction thereof, except controversies or Claims relating to aesthetic effect and except those waived as provided for in Subparagraph 4.7.5. Such controversies or Claims upon which the Architect has given notice and rendered a decision as provided in Subparagraph 4.8.4 shall be subject to arbitration upon written demand of either party. Arbitration may be commenced when 45 days have passed after a Claim has been referred to the Architect as provided in Paragraph 4.7 and no decision has been rendered.

4.9.2 Rules and Notices for Arbitration. Claims between the Owner and Contractor not resolved under Paragraph 4.8 shall, if subject to arbitration under Subparagraph 4.9.1, be decided by arbitration in accordance with the Construction Industry Arbitration Rules of the American Arbitration Association currently in effect, unless the parties mutually agree otherwise. Notice of demand for arbitration shall be filed in writing with the other party to the Agreement between the Owner and Contractor and with the American Arbitration Association, and copies shall be filed with the Construction Manager and Architect.

4.9.3 Contract Performance During Arbitration. During arbitration proceedings, the Owner and Contractor shall comply with Subparagraph 4.7.4.

4.9.4 When Arbitration May Be Demanded. Demand for arbitration of any Claim may not be made until the earlier of (1) the date on which the Architect has rendered a final written decision on the Claim, (2) the tenth day after the parties have presented evidence to the Architect or have been given reasonable opportunity to do so, if the Architect has not rendered a final written decision by that date, or (3) any of the five events described in Subparagraph 4.7.2.

4.9.4.1 When a written decision of the Architect states that (1) the decision is final but subject to arbitration and (2) a demand for arbitration of a Claim covered by such decision must be made within 30 days after the date on which the party making the demand receives the final written decision, then failure to demand arbitration within said 30 days' period shall result in the Architect's decision becoming final and binding upon the Owner and Contractor. If the Architect renders a decision after arbitration proceedings have been initiated, such decision may be entered as evidence, but shall not supersede arbitration proceedings unless the decision is acceptable to all parties concerned.

4.9.4.2 A demand for arbitration shall be made within the time limits specified in Subparagraphs 4.9.1 and 4.9.4 and Clause 4.9.4.1 as applicable, and in other cases within a reasonable time after the Claim has arisen, and in no event shall it be made after the date when institution of legal or equitable proceedings based on such Claim would be barred by the applicable statute of limitations as determined pursuant to Paragraph 13.7.

4.9.5 Limitation on Consolidation or Joinder. No arbitration arising out of or relating to the Contract Documents shall include, by consolidation or joinder or in any other manner, the Construction Manager, the Architect, or the Construction Manager's or Architect's employees or consultants, except by written consent containing specific reference to the Agreement and signed by the Construction Manager, Architect, Owner, Contractor and any other person or entity sought to be joined. No arbitration shall include, by consolidation or joinder or in any other manner, parties other than the Owner, Contractor, other Contractors as described in Article 6 and other persons substantially involved in a common question of fact or law whose presence is required if complete relief is to be accorded in arbitration. No persons or entities other than the Owner, Contractor or other Contractors as defined in Subparagraph 3.1.2 shall be included as an original third party or additional third party to an arbitration whose interest or responsibility is insubstantial. Consent to arbitration involving an additional person or entity shall not constitute consent to arbitration of a dispute not described therein or with a person or entity not named or described therein. The foregoing agreement to arbitrate and other agreements to arbitrate with an additional person or entity duly consented to by parties to the Agreement shall be specifically enforceable under applicable law in any court having jurisdiction thereof.

4.9.6 Claims and Timely Assertion of Claims. A party who files a notice of demand for arbitration must assert in the demand all Claims then known to that party on which arbitration is permitted to be demanded. When a party fails to include a Claim through oversight, inadvertence or excusable neglect, or when a Claim has matured or been acquired subsequently, the arbitrator or arbitrators may permit amendment.

4.9.7 Judgment on Final Award. The award rendered by the arbitrator or arbitrators shall be final, and judgment may

© 1992 THE AMERICAN INSTITUTE OF ARCHITECTS, 1735 NEW YORK AVENUE, N.W., WASHINGTON, D.C., 20006-5292. AIA DOCUMENT A201/CMa - GENERAL CONDITIONS OF THE CONTRACT FOR CONSTRUCTION - CONSTRUCTION MANAGER-ADVISER EDITION - 1992 EDITION - AIA® - WARNING: Unlicensed photocopying violates U.S. copyright laws and will subject the violator to legal prosecution. This document was electronically produced with permission of the AIA and can be reproduced in accordance with your license without violation until the date of expiration as noted below. expiration as noted below. expiration as noted below. User Document: a201cma pe group final january 1, 2004.aia -- 1/13/2004. AIA License Number 1015952, which expires on 6/20/2004.

be entered upon it in accordance with applicable law in any court having jurisdiction thereof.

ARTICLE 5
SUBCONTRACTORS

5.1 DEFINITIONS

5.1.1 A Subcontractor is a person or entity who has a direct contract with the Contractor to perform a portion of the Work at the site. The term "Subcontractor" is referred to throughout the Contract Documents as if singular in number and means a Subcontractor or an authorized representative of the Subcontractor. The term "Subcontractor" does not include other Contractors or subcontractors of other Contractors.

5.1.2 A Sub-subcontractor is a person or entity who has a direct or indirect contract with a Subcontractor to perform a portion of the Work at the site. The term "Sub-subcontractor" is referred to throughout the Contract Documents as if singular in number and means a Sub-subcontractor or an authorized representative of the Sub-subcontractor.

5.2 AWARD OF SUBCONTRACTS AND OTHER CONTRACTS FOR PORTIONS OF THE WORK

5.2.1 Within seven (7) days after award of the Contract, the Contractor shall submit in writing to the Construction Manager, for review by the Owner, Architect and Construction Manager, (1) the name, trade, and subcontract amount for each Subcontractor and (2) the names of all persons or entities proposed as manufacturers of the products identified in the Specifications (including those who are to furnish materials or equipment fabricated to a special design) and, where applicable, the name of the installing Subcontractor. ~~Unless otherwise stated in the Contract Documents or the bidding requirements, the Contractor, as soon as practicable after award of the Contract, shall furnish in writing to the Construction Manager for review by the Owner, Construction Manager and Architect the names of persons or entities (including those who are to furnish materials or equipment fabricated to a special design) proposed for each principal portion of the Work.~~ The Construction Manager will promptly reply to the Contractor in writing stating whether or not the Owner, Construction Manager or Architect, after due investigation, has reasonable objection to any such proposed person or entity. Failure of the Construction Manager to reply promptly shall constitute notice of no reasonable objection.

5.2.2 The Contractor shall not contract with a proposed person or entity to whom the Owner, Construction Manager or Architect has made reasonable and timely objection. The Contractor shall not be required to contract with anyone to whom the Contractor has made reasonable objection.

5.2.3 If the Owner, Construction Manager or Architect has reasonable objection to a person or entity proposed by the Contractor, the Contractor shall propose another to whom the Owner, Construction Manager or Architect has no reasonable objection. ~~The Contract Sum shall be increased or decreased by the difference in cost occasioned by such change and an appropriate Change Order shall be issued.~~ The Contract Sum shall be amended by either of the following at the Owner's sole discretion: (1) the difference between the subcontract amount proposed by the person or entity recommended by the Contractor and the subcontract amount proposed by the person or entity accepted or designated by the Owner and the Construction Manager; or (2) the amount by which the subcontract amount proposed by the person or entity accepted or designated by the Owner and Construction Manager exceeds the amount set forth in the Schedule of Values that is applicable to the Work covered by such subcontract. However, no increase in the Contract Sum shall be allowed for such change unless the Contractor has acted promptly and responsively in submitting names as required.

5.2.4 The Contractor shall not change a Subcontractor, person or entity previously selected if the Owner, Construction Manager or Architect makes reasonable objection to such change.

5.3 SUBCONTRACTUAL RELATIONS

5.3.1 By appropriate written agreement, ~~written where legally required for validity~~, the Contractor shall require each Subcontractor, to the extent of the Work to be performed by the Subcontractor, to be bound to the Contractor by terms of the Contract Documents, and to assume toward the Contractor all the obligations and responsibilities which the Contractor, by these Documents, assumes toward the Owner, Construction Manager and Architect. Each subcontract agreement shall preserve and protect the rights of the Owner, Construction Manager and Architect under the Contract Documents with respect to the Work to be performed by the Subcontractor so that subcontracting thereof will not prejudice such rights, and shall allow to the Subcontractor, unless specifically provided otherwise in the subcontract agreement, the benefit of all rights, remedies and redress against the Contractor that the Contractor, by the Contract Documents, has against the Owner. Where appropriate, the Contractor shall require each Subcontractor to enter into similar agreements with Sub-subcontractors. The Contractor shall make available to each proposed Subcontractor, prior to the execution of the subcontract agreement, copies of the Contract Documents to which the Subcontractor will be bound, and, upon written request of the Subcontractor, identify to the Subcontractor terms and conditions of the proposed subcontract agreement which may be at variance with the Contract Documents. Subcontractors shall similarly make copies of applicable portions of such documents available to their respective proposed Sub-subcontractors.

© 1992 THE AMERICAN INSTITUTE OF ARCHITECTS, 1735 NEW YORK AVENUE, N.W., WASHINGTON, D.C., 20006-5292. AIA DOCUMENT A201/CMa - GENERAL CONDITIONS OF THE CONTRACT FOR CONSTRUCTION - CONSTRUCTION MANAGER-ADVISER EDITION - 1992 EDITION - AIA® - WARNING: Unlicensed photocopying violates U.S. copyright laws and will subject the violator to legal prosecution. This document was electronically produced with permission of the AIA and can be reproduced in accordance with your license without violation until the date of expiration as noted below. expiration as noted below. expiration as noted below. User Document: a201cma pe group final january 1, 2004.aia -- 1/13/2004. AIA License Number 1015952, which expires on 6/20/2004.

5.3.2 All subcontracts shall be in writing and shall specifically provide that the Owner is an intended third-party beneficiary of such subcontracts.

5.4 CONTINGENT ASSIGNMENT OF SUBCONTRACTS

5.4.1 Each subcontract agreement for a portion of the Work is assigned by the Contractor to the Owner provided that:

.1 assignment is effective only after termination of the Contract by the Owner for cause pursuant to Paragraph 14.2 and only for those subcontract agreements which the Owner accepts by notifying the Subcontractor in writing; and

.2 assignment is subject to the prior rights of the surety, if any, obligated under bond relating to the Contract.

5.4.2 ~~If the Work has been suspended for more than 30 days, the Subcontractor's compensation shall be equitably adjusted.~~ If the Work in connection with a subcontract has been suspended for more than thirty (30) days after termination of the Contract by the Owner pursuant to Paragraph 14.2 or Paragraph 14.4 and the Owner accepts assignment of such subcontract, the Subcontractor's compensation shall be equitably adjusted for any increase in direct costs necessarily incurred by such subcontractor as a result of the suspension. In no event will such an adjustment include extended home office overhead or lost profit.

ARTICLE 6
CONSTRUCTION BY OWNER OR BY OTHER CONTRACTORS

6.1 OWNER'S RIGHT TO PERFORM CONSTRUCTION WITH OWN FORCES AND TO AWARD OTHER CONTRACTS

6.1.1 The Owner reserves the right to perform construction or operations related to the Project with the Owner's own forces, which may include persons or entities under separate contracts not administered by the Construction Manager. The Owner further reserves the right to award other contracts in connection with other portions of the Project or other construction or operations on the site ~~under Conditions of the Contract identical or substantially similar to these including those portions related to insurance and waiver of subrogation.~~ If the Contractor claims that delay or additional cost is involved because of such action by the Owner, the Contractor shall make such Claim as provided elsewhere in the Contract Documents.

6.1.2 When the Owner performs construction or operations with the Owner's own forces including persons or entities under separate contracts not administered by the Construction Manager, the Owner or the Construction Manager shall provide for coordination of such forces with the Work of the Contractor, who shall cooperate with them.

6.1.3 Unless otherwise provided in the Contract Documents, when the Owner performs construction or operations related to the Project with the Owner's own forces, the Owner shall be deemed to ~~be subject to the same obligations and to~~ have the same rights which apply to the Contractor under the Conditions of the Contract, including, without excluding others, those stated in this Article 6 and in Articles 3, 10, 11 and 12, as amended.

6.2 MUTUAL RESPONSIBILITY

6.2.1 The Contractor shall afford the Owner's own forces, Construction Manager and other Contractors reasonable opportunity for introduction and storage of their materials and equipment and performance of their activities, and shall connect and coordinate the Contractor's construction and operations with theirs as required by the Contract Documents.

6.2.2 If part of the Contractor's Work depends for proper execution or results upon construction or operations by the Owner's own forces or other Contractors, the Contractor shall, prior to proceeding with that portion of the Work, promptly report to the Construction Manager and Architect apparent discrepancies or defects in such other construction that would render it unsuitable for such proper execution and results. Failure of the Contractor so to report shall constitute an acknowledgment that the Owner's own forces or other Contractors' completed or partially completed construction is fit and proper to receive the Contractor's Work, except as to defects not then reasonably discoverable.

6.2.3 Costs caused by delays or by improperly timed activities or defective construction shall be borne by the party responsible therefor.

6.2.4 The Contractor shall promptly remedy damage wrongfully caused by the Contractor to completed construction or partially completed construction or to property of the Owner or other Contractors as provided in Subparagraph 10.2.5. Should a claim be made that the Contractor wrongfully delayed or caused damage to the Work or property of another contractor, the Contractor shall promptly settle the dispute with such other contractor. If a separate contractor sues or initiates an arbitration proceeding against the Construction Manager or Owner on account of any delay or damage alleged to have been caused by the Contractor, the Construction Manager will notify the Contractor who shall defend such proceedings at the Contractor's sole expense. If any judgment or award against the Construction Manager or Owner arises therefrom, the Contractor shall pay or satisfy it and shall reimburse the Construction Manager or Owner for all costs, including attorney's fees and court or arbitration costs which either may have incurred.

© 1992 THE AMERICAN INSTITUTE OF ARCHITECTS, 1735 NEW YORK AVENUE, N.W., WASHINGTON, D.C., 20006-5292. AIA DOCUMENT A201/CMa - GENERAL CONDITIONS OF THE CONTRACT FOR CONSTRUCTION - CONSTRUCTION MANAGER-ADVISER EDITION - 1992 EDITION - AIA® - WARNING: Unlicensed photocopying violates U.S. copyright laws and will subject the violator to legal prosecution. This document was electronically produced with permission of the AIA and can be reproduced in accordance with your license without violation until the date of expiration as noted below. expiration as noted below. expiration as noted below. User Document: a201cma pe group final january 1, 2004.aia – 1/13/2004. AIA License Number 1015952, which expires on 6/20/2004.

6.2.5 Claims and other disputes and matters in question between the Contractor and other Contractors shall be subject to the provisions of Paragraph 4.7 provided the other Contractors have reciprocal obligations.

6.2.6 The Owner and other Contractors shall have the same responsibilities for cutting and patching as are described for the Contractor in Paragraph 3.14.

6.3 OWNER'S OR CONSTRUCTION MANAGER'S RIGHT TO CLEAN UP

6.3.1 If a dispute arises among the Contractor, other Contractors and the Construction Manager and/or the Owner as to the responsibility under their respective contracts for maintaining the premises and surrounding area free from waste materials and rubbish as described in Paragraph 3.15, the Owner or Construction Manager may clean up and allocate the cost among those responsible as the Construction Manager, in consultation with the Architect, determines to be just. Refer to Project Manual Section 01550 - Clean Up and Final Cleaning.

ARTICLE 7
CHANGES IN THE WORK

7.1 CHANGES

7.1.1 Changes in the Work may be accomplished after execution of the Contract, and without invalidating the Contract, by Change Order, ~~Construction Change Directive~~ Notice to Proceed, or order for a minor change in the Work, subject to the limitations stated in this Article 7 and elsewhere in the Contract Documents. Refer to Project Manual Section 01250 - Changes in the Work.

7.1.2 A Change Order shall be based upon agreement among the Owner, Construction Manager, Architect and Contractor; a ~~Construction Change Directive~~Notice to Proceed requires agreement by the Owner, Construction Manager and Architect and may or may not be agreed to by the Contractor; an order for a minor change in the Work may be issued by the Architect alone.

7.1.3 Changes in the Work shall be performed under applicable provisions of the Contract Documents, and Contractor shall proceed promptly, unless otherwise provided in the Change Order, ~~Construction Change Directive~~Notice to Proceed, or order for a minor change in the Work. Except as permitted in Paragraph 7.3, an increase in the Contract Sum or the Contract Time shall be accomplished only by Change Order. Accordingly, no course of conduct or dealings between the parties, nor express or implied acceptance of alterations or additions to the Work, and no claim that the Owner has been unjustly enriched by any alteration or addition to the Work, whether or not there is, in fact, any unjust enrichment to the Work, shall be the basis of any claim for an increase in any amounts due under the Contract Documents or for a change in any time period provided for in the Contract Documents.

7.1.4 If unit prices are stated in the Contract Documents or subsequently agreed upon, and if quantities originally contemplated are so changed in a proposed Change Order or Notice to Proceed~~Construction Change Directive~~ that application of such unit prices to quantities of Work proposed will cause substantial inequity to the Owner or Contractor, the applicable unit prices shall be equitably adjusted.

7.2 CHANGE ORDERS

7.2.1 A Change Order is a written instrument prepared by the Construction Manager and signed by the Owner, Construction Manager, Architect and Contractor, stating their agreement upon all of the following:

.1 a change in the Work;

.2 the amount of the adjustment in the Contract Sum, if any; and

.3 the extent of the adjustment in the Contract Time, if any.

7.2.2 Methods used in determining adjustments to the Contract Sum ~~may include~~ shall be those listed in Subparagraph 7.3.3.

7.2.3 Agreement on any Change Order shall constitute a final settlement of all matters relating to the change in the Work that is the subject of the Change Order, including, but not limited to, all direct and indirect costs associated with such change, any impact such change may have on the unchanged Work, including but not limited to claims for acceleration, stacking, inefficiency, ripple effect, disruption, compression, interference, delay and cumulative impact, and any and all adjustments to the Contract Sum and the Schedule. In the event a Change Order increases the Contract Sum, the Contractor shall include the Work covered by such Change Orders in Applications for Payment as if such Work were originally part of the Contract Documents.

7.3 ~~CONSTRUCTION CHANGE DIRECTIVES~~ NOTICE TO PROCEED and QUOTATION ONLY

7.3.1 A ~~Construction Change Directive~~Notice to Proceed is a written order prepared by the Construction Manager and signed by the Owner, Construction Manager and Architect, directing a change in the Work and stating a proposed basis for adjustment, if any, in the Contract Sum or Contract Time, or both. The Owner may by ~~Construction Change~~

© 1992 THE AMERICAN INSTITUTE OF ARCHITECTS, 1735 NEW YORK AVENUE, N.W., WASHINGTON, D.C., 20006-5292. AIA DOCUMENT A201/CMa - GENERAL CONDITIONS OF THE CONTRACT FOR CONSTRUCTION - CONSTRUCTION MANAGER-ADVISER EDITION - 1992 EDITION - AIA® - WARNING: Unlicensed photocopying violates U.S. copyright laws and will subject the violator to legal prosecution. This document was electronically produced with permission of the AIA and can be reproduced in accordance with your license without violation until the date of expiration as noted below. expiration as noted below. expiration as noted below. User Document: a201cma pe group final january 1, 2004.aia -- 1/13/2004. AIA License Number 1015952, which expires on 6/20/2004.

~~Directive~~Notice to Proceed, without invalidating the Contract, order changes in the Work within the general scope of the Contract consisting of additions, deletions or other revisions, the Contract Sum and Contract Time being adjusted accordingly. A Quotation Only has the meaning set forth in Project Manual Section 01250 - Changes in the Work.

7.3.2 A ~~Construction Change Directive~~Notice to Proceed shall be used in the absence of total agreement on the terms of a Change Order or when time constraints preclude getting a Change Order issued.

7.3.3 If the ~~Construction Change Directive~~Notice to Proceed provides for an adjustment to the Contract Sum, the adjustment shall be based on one or more of the following methods:

.1 mutual acceptance of a lump sum properly itemized and supported by sufficient substantiating data to permit evaluation;

.2 unit prices stated in the Contract Documents or subsequently agreed upon; or

.3 actual cost to be determined in a manner agreed upon by the parties and a mutually acceptable fixed or percentage fee as set forth in Project Manual section 01250 - Changes in the Work; ~~or~~.

~~.4 as provided in Subparagraph 7.3.6.~~

7.3.4 Upon receipt of a ~~Construction Change Directive~~Notice to Proceed, the Contractor shall promptly proceed with the change in the Work involved, ~~and advise the Construction Manager and Architect of the Contractor's agreement or disagreement with the method, if any, provided in the Construction Change Directive for determining the proposed adjustment in the Contract Sum or Contract Time.~~

7.3.5 A ~~Construction Change Directive~~Notice to Proceed signed by the Contractor indicates the agreement of the Contractor therewith, including adjustment in Contract Sum and Contract Time or the method for determining them. Such agreement shall be effective immediately and shall be recorded as a Change Order.

~~**7.3.6** If the Contractor does not respond promptly or disagrees with the method for adjustment in the Contract Sum, the method and the adjustment shall be determined by the Construction Manager on the basis of reasonable expenditures and savings of those performing the Work attributable to the change, including, in case of an increase in the Contract Sum, a reasonable allowance for overhead and profit. In such case, and also under Clause 7.3.3.3, the Contractor shall keep and present, in such form as the Construction Manager may prescribe, an itemized accounting together with appropriate supporting data. Unless otherwise provided in the Contract Documents, costs for the purposes of this Subparagraph 7.3.6 shall be limited to the following:~~

~~.1 costs of labor, including social security, old age and unemployment insurance, fringe benefits required by agreement or custom, and workers compensation insurance;~~

~~.2 costs of materials, supplies and equipment, including cost of transportation, whether incorporated or consumed;~~

~~.3 rental costs of machinery and equipment, exclusive of hand tools, whether rented from the Contractor or others;~~

~~.4 costs of premiums for all bonds and insurance, permit fees, and sales, use or similar taxes related to the Work; and~~

~~.5 additional costs of supervision and field office personnel directly attributable to the change.~~

~~**7.3.7** Pending final determination of cost to the Owner, amounts not in dispute may be included in Applications for Payment. The amount of credit to be allowed by the Contractor to the Owner for a deletion or change which results in a net decrease in the Contract Sum shall be actual net cost as confirmed by the Construction Manager. When both additions and credits covering related Work or substitutions are involved in a change, the allowance for overhead and profit shall be figured on the basis of net increase, if any, with respect to that change.~~

~~**7.3.8** If the Owner and Contractor do not agree with the adjustment in Contract Time or the method for determining it, the adjustment or the method shall be referred to the Construction Manager for determination.~~

~~**7.3.9** When the Owner and Contractor agree with the determination made by the Construction Manager concerning the adjustments in the Contract Sum and Contract Time, or otherwise reach agreement upon the adjustments, such agreement shall be effective immediately issued through the Construction Manager and shall be recorded by preparation and execution of an appropriate Change Order.~~

7.4 MINOR CHANGES IN THE WORK

7.4.1 The Architect will have authority to order minor changes in the Work not involving adjustment in the Contract Sum or extension of the Contract Time and not inconsistent with the intent of the Contract Documents. Such changes shall be effected by written order issued through the Construction Manager and shall be binding on the Owner and Contractor. The Contractor shall carry out such written orders promptly.

© 1992 THE AMERICAN INSTITUTE OF ARCHITECTS, 1735 NEW YORK AVENUE, N.W., WASHINGTON, D.C., 20006-5292. AIA DOCUMENT A201/CMa - GENERAL CONDITIONS OF THE CONTRACT FOR CONSTRUCTION - CONSTRUCTION MANAGER-ADVISER EDITION - 1992 EDITION - AIA® - WARNING: Unlicensed photocopying violates U.S. copyright laws and will subject the violator to legal prosecution. This document was electronically produced with permission of the AIA and can be reproduced in accordance with your license without violation until the date of expiration as noted below. expiration as noted below. expiration as noted below. User Document: a201cma pe group final january 1, 2004.aia -- 1/13/2004. AIA License Number 1015952, which expires on 6/20/2004.

ARTICLE 8
TIME

8.1 DEFINITIONS

8.1.1 Unless otherwise provided, Contract Time is the period of time, including authorized adjustments, allotted in the Contract Documents for Substantial Completion of the Work.

8.1.2 The date of commencement of the Work is the date established in the Agreement. The date shall not be postponed by the failure to act of the Contractor or of persons or entities for whom the Contractor is responsible.

8.1.3 The date of Substantial Completion is the date certified by the Architect in accordance with Paragraph 9.8.

8.1.4 The term "day" as used in the Contract Documents shall mean calendar day unless otherwise specifically defined.

8.2 PROGRESS AND COMPLETION

8.2.1 Time limits stated in the Contract Documents are of the essence of the Contract. By executing the Agreement the Contractor confirms that the Contract Time is a reasonable period for performing the Work.

8.2.2 The Contractor shall not knowingly, except by agreement or instruction of the Owner in writing, prematurely commence operations on the site or elsewhere prior to the effective date of insurance required by Article 11 to be furnished by the Contractor. The date of commencement of the Work shall not be changed by the effective date of such insurance. Unless the date of commencement is established by a notice to proceed given by the Owner, the Contractor shall notify the Owner in writing not less than five days or other agreed period before commencing the Work to permit the timely filing of mortgages, mechanic's liens and other security interests.

8.2.3 The Contractor shall proceed expeditiously with adequate forces and shall achieve Substantial Completion within the Contract Time. All Work shall be completed in sufficient time to allow for clean-up and preparation for Owner move-in prior to the date of Substantial Completion of the Work.

8.3 DELAYS AND EXTENSIONS OF TIME

8.3.1 If the Contractor is delayed at any time in progress of the Work by an act or neglect of the Owner's own forces, Construction Manager, Architect, any of the other Contractors or an employee of any of them, or by changes ordered in the Work, or by labor disputes, fire, unusual delay in deliveries, adverse weather conditions not reasonably anticipated, unavoidable casualties or other causes beyond the Contractor's control, or by delay authorized by the Owner pending arbitration, or by other causes which the ~~Architect, based on the recommendation of the~~ Construction Manager, determines may justify delay, then the Contract Time shall be extended by Change Order to the extent such delay will prevent the Contractor from achieving Substantial Completion within the Contract Time and if the performance of the Work is not, was not, or would not have been delayed by any other cause for which the Contractor is not entitled to an extension in the Contract Time under the Contract Documents. The Contractor further acknowledges and agrees that adjustments in the Contract Time will be permitted for a delay only to the extent such delay is not caused, or could not have been anticipated or prevented by the Contactor, could not be limited or avoided by the Contractor's timely notice to the Owner of the delay, and is of a duration not less than one (1) day. ~~for such reasonable time as the Architect may determine.~~

8.3.2 ~~Claims relating to time shall be made in accordance with applicable provisions of Paragraph 4.7.~~ Any claim for extension of time shall be made in writing to the Construction Manager in the manner and time specified by Paragraph 4.7; otherwise it shall be waived. In the case of a continuing delay only one claim is necessary. The Contractor shall provide a written estimate of the probable effect of such delay on the progress of the Work.

8.3.3 ~~This Paragraph 8.3 does not preclude recovery of damages for delay by either party under other provisions of the Contract Documents.~~ Notwithstanding anything to the contrary in the Contract Documents, an extension in the Contract Time, to the extent permitted under Subparagraph 8.3.1, shall be the sole remedy of the Contractor for any (1) delay in the commencement, prosecution, or completion of the Work; (2) hinderance or obstruction in the performance of the Work; (3) loss of productivity or acceleration; or (4) other similar claims (collectively referred to in this Subparagraph 8.3.3 as Delays) whether or not such Delays are foreseeable, unless a Delay is caused by the Owner's active interference with the Contractor's performance of the Work, and only to the extent such acts continue after the Contractor furnishes the Owner with notice of such interference. In no event shall the Contractor be entitled to any compensation or recovery of any damages in connection with any Delay, including, without limitation, consequential damages, lost opportunity costs, impact damages, or other similar remuneration. The Owner's exercise of any of its rights or remedies under the Contract Documents (including, without limitation, ordering changes in the Work, or directing suspension, rescheduling, or correction of the Work), regardless of the extent or frequency of the Owner's exercise of such rights or remedies, shall not be construed as active

© 1992 THE AMERICAN INSTITUTE OF ARCHITECTS, 1735 NEW YORK AVENUE, N.W., WASHINGTON, D.C., 20006-5292. AIA DOCUMENT A201/CMa - GENERAL CONDITIONS OF THE CONTRACT FOR CONSTRUCTION - CONSTRUCTION MANAGER-ADVISER EDITION - 1992 EDITION - AIA® - WARNING: Unlicensed photocopying violates U.S. copyright laws and will subject the violator to legal prosecution. This document was electronically produced with permission of the AIA and can be reproduced in accordance with your license without violation until the date of expiration as noted below. expiration as noted below. expiration as noted below. User Document: a201cma pe group final january 1, 2004.aia -- 1/13/2004. AIA License Number 1015952, which expires on 6/20/2004.

interference with the Contractor's performance of the Work.

ARTICLE 9
PAYMENTS AND COMPLETION

9.1 CONTRACT SUM

9.1.1 The Contract Sum is stated in the Agreement and, including authorized adjustments, is the total amount payable by the Owner to the Contractor for performance of the Work under the Contract Documents.

9.2 SCHEDULE OF VALUES

9.2.1 ~~Before the first Application for Payment, the~~ Within seven (7) days after award of contract, Contractor shall submit to the Architect, through the Construction Manager, a schedule of values allocated to various portions of the Work, prepared in such form and supported by such data to substantiate its accuracy as the Construction Manager and Architect may require. This schedule, unless objected to by the Construction Manager or Architect, shall be used as a basis for reviewing the Contractor's Applications for Payment.

9.3 APPLICATIONS FOR PAYMENT

9.3.1 At least fifteen days before the date established for each progress payment, the Contractor shall submit to the Construction Manager an itemized Application for Payment for Work completed in accordance with the schedule of values. Such application shall be notarized, if required, and supported by such data substantiating the Contractor's right to payment as the Owner, Construction Manager or Architect may require, such as copies of requisitions from Subcontractors and material suppliers, and reflecting retainage if provided for elsewhere in the Contract Documents. See Project Manual Section 01290 - Payment Procedures for a description of Contractor's obligations in relation to Applications for Payment.

9.3.1.1 Such applications may include requests for payment on account of changes in the Work which have been properly authorized by ~~Construction Change Directives~~Notice to Proceed but not yet included in Change Orders.

9.3.1.2 Such applications may not include requests for payment of amounts the Contractor does not intend to pay to a Subcontractor or material supplier because of a dispute or other reason.

9.3.1.3 The Contractor shall provide supporting data substantiating the Contractor's right to payment as the Owner, Architect and Construction Manager may require.

9.3.2 Payment will not be made on account of materials or equipment stored on or off site unless the requirements set forth in Project Manual Section 01290 regarding materials stored off site are met to the satisfaction of Construction Manager. ~~Unless otherwise provided in the Contract Documents, payments shall be made on account of materials and equipment delivered and suitably stored at the site for subsequent incorporation in the Work. If approved in advance by the Owner, payment may similarly be made for materials and equipment suitably stored off the site at a location agreed upon in writing. Payment for materials and equipment stored on or off the site shall be conditioned upon compliance by the Contractor with procedures satisfactory to the Owner to establish the Owner's title to such materials and equipment or otherwise protect the Owner's interest, and shall include applicable insurance, storage and transportation to the site for such materials and equipment stored off the site.~~

9.3.3 The Contractor warrants that title to all Work (including materials and equipment) covered by an Application for Payment will pass to the Owner no later than the time of payment. The Contractor further warrants that upon submittal of an Application for Payment all Work for which Certificates for Payment have been previously issued and payments received from the Owner shall, to the best of the Contractor's knowledge, information and belief, be free and clear of liens, claims, security interests or encumbrances (hereinafter collectively referred to as "Liens") in favor of the Contractor, Subcontractors, material suppliers, or other persons or entities making a claim by reason of having provided labor, materials and equipment relating to the Work.

9.3.3.1 The Contractor further expressly undertakes to defend the Indemnitees, at the Contractor's sole expense, against any actions, lawsuits, or proceedings brought against the Indemnitees as a result of Liens filed against the Work, the site of the Work, the Project site and any improvements on it, payments due the Contractor, or any portion of the property of any of the Indemnities. The Contractor agrees to indemnify and hold the Indemnitees harmless against any such Liens and agrees to pay any judgment resulting from any such actions, lawsuits, or proceedings.

9.3.3.2 The Owner shall release any payments withheld due to a Lien if the Contractor obtains security acceptable to the Owner or a lien bond that is (1) issued to a surety acceptable to the Owner; (2) in form and substance satisfactory to the Owner; and (3) in an amount not less than one hundred fifty percent (150%) of such Lien. By posting a lien bond or other acceptable security, however, the Contractor shall not be relieved of any responsibilities or obligations under this Paragraph 9.3, including, without limitation, the duty to defend and indemnify the Indemnitees. The cost of any premiums incurred in connection with such bonds and security shall be the Contactor's responsibility and shall not be part of, or cause any adjustment to, the Contract Sum.

© 1992 THE AMERICAN INSTITUTE OF ARCHITECTS, 1735 NEW YORK AVENUE, N.W., WASHINGTON, D.C., 20006-5292. AIA DOCUMENT A201/CMa - GENERAL CONDITIONS OF THE CONTRACT FOR CONSTRUCTION - CONSTRUCTION MANAGER-ADVISER EDITION - 1992 EDITION - AIA® - WARNING: Unlicensed photocopying violates U.S. copyright laws and will subject the violator to legal prosecution. This document was electronically produced with permission of the AIA and can be reproduced in accordance with your license without violation until the date of expiration as noted below. expiration as noted below. expiration as noted below. User Document: a201cma pe group final january 1, 2004.aia -- 1/13/2004. AIA License Number 1015952, which expires on 6/20/2004.

9.3.3.3 Notwithstanding the foregoing, the Owner reserves the right to settle any disputed Lien by making payment to the lien claimant or by such other means as the Owner, in the Owner's sole discretion, determines is the most economical or advantageous method of settling the dispute. The Contractor shall promptly reimburse Owner, upon demand, for any payments so made.

9.4 CERTIFICATES FOR PAYMENT

9.4.1 ~~The Construction Manager will assemble a Project Application for Payment by combining the Contractor's applications with similar applications for progress payments from other Contractors and, after certifying the amounts due on such applications, forward them to the Architect within seven days.~~ The Architect will, after the receipt of the Project Application for Payment with the recommendations of the Construction Manager, review the Project Application for Payment and either issue a Project Certificate for Payment to the Owner with a copy to the Construction Manager for such amounts as the Architect determines are properly due, or notify the Construction Manager and Owner in writing of the reasons for withholding a Certificate as provided in Subparagraph 9.5.1. Such notifications will be forwarded to the Contractor by the Construction Manager.

~~9.4.2 Within seven days after the Architect's receipt of the Project Application for Payment, the Construction Manager and Architect will either issue to the Owner a Project Certificate for Payment, with a copy to the Contractor, for such amount as the Construction Manager and Architect determine is properly due, or notify the Contractor and Owner in writing of the Construction Manager's and Architect's reasons for withholding certification in whole or in part as provided in Subparagraph 9.5.1. Such notification will be forwarded to the Contractor by the Construction Manager.~~

9.4.2 The issuance of a separate Certificate for Payment or a Project Certificate for Payment will constitute representations made separately by the Construction Manager and Architect to the Owner, based on their individual observations at the site and the data comprising the Application for Payment submitted by the Contractor, that the Work has progressed to the point indicated and that, to the best of the Construction Manager's and Architect's knowledge, information and belief, quality of the Work is in accordance with the Contract Documents. The foregoing representations are subject to an evaluation of the Work for conformance with the Contract Documents upon Substantial Completion, to results of subsequent tests and inspections, to minor deviations from the Contract Documents correctable prior to completion and to specific qualifications expressed by the Construction Manager or Architect. The issuance of a separate Certificate for Payment or a Project Certificate for Payment will further constitute a representation that the Contractor is entitled to payment in the amount certified. However, the issuance of a separate Certificate for Payment or a Project Certificate for Payment will not be a representation that the Construction Manager or Architect has (1) made exhaustive or continuous on-site inspections to check the quality or quantity of the Work, (2) reviewed the Contractor's construction means, methods, techniques, sequences or procedures, (3) reviewed copies of requisitions received from Subcontractors and material suppliers and other data requested by the Owner to substantiate the Contractor's right to payment or (4) made examination to ascertain how or for what purpose the Contractor has used money previously paid on account of the Contract Sum.

9.5 DECISIONS TO WITHHOLD CERTIFICATION

9.5.1 The Construction Manager or Architect may decide not to certify payment and may withhold a Certificate for Payment in whole or in part, to the extent reasonably necessary to protect the Owner, if in the Construction Manager's or Architect's opinion the representations to the Owner required by Subparagraph ~~9.4.3~~ 9.4.2 cannot be made. If the Construction Manager or Architect is unable to certify payment in the amount of the Application, the Construction Manager or Architect will notify the Contractor and Owner as provided in Subparagraph ~~9.4.2.~~ 9.4.1. If the Contractor, Construction Manager and Architect cannot agree on a revised amount, the Construction Manager and Architect will promptly issue a Certificate for Payment for the amount for which the Construction Manager and Architect are able to make such representations to the Owner. The Construction Manager or Architect may also decide not to certify payment or, because of subsequently discovered evidence or subsequent observations, may nullify the whole or a part of a Certificate for Payment previously issued, to such extent as may be necessary in the Construction Manager's or Architect's opinion to protect the Owner from loss because of:

.1 defective Work not remedied;

.2 third party claims filed or reasonable evidence indicating probable filing of such claims;

.3 failure of the Contractor to make payments properly to Subcontractors or for labor, materials or equipment;

.4 reasonable evidence that the Work cannot be completed for the unpaid balance of the Contract Sum;

.5 damage to the Owner or Construction Manager or another contractor;

.6 reasonable evidence that the Work will not be completed within the Contract Time, and that the unpaid balance would not be adequate to cover actual or liquidated damages for the anticipated delay; or

© 1992 THE AMERICAN INSTITUTE OF ARCHITECTS, 1735 NEW YORK AVENUE, N.W., WASHINGTON, D.C., 20006-5292. AIA DOCUMENT A201/CMa - GENERAL CONDITIONS OF THE CONTRACT FOR CONSTRUCTION - CONSTRUCTION MANAGER-ADVISER EDITION - 1992 EDITION - AIA® - WARNING: Unlicensed photocopying violates U.S. copyright laws and will subject the violator to legal prosecution. This document was electronically produced with permission of the AIA and can be reproduced in accordance with your license without violation until the date of expiration as noted below. expiration as noted below. expiration as noted below. User Document: a201cma pe group final january 1, 2004.aia -- 1/13/2004. AIA License Number 1015952, which expires on 6/20/2004.

.7 persistent failure to carry out the Work in accordance with the Contract Documents.

9.5.2 When the above reasons for withholding certification are removed, certification will be made for amounts previously withheld.

9.5.3 Should the Subcontractor be in debt to the Owner for any reason, whether in connection with this Contract or a separate contract on this, or another Project, then Owner shall have the right to apply funds from this Contract against the debt owed.

9.6 PROGRESS PAYMENTS

9.6.1 The Owner shall either forward payments for the preceding month's Work to the Contractor directly, or forward payments for the preceding month's Work to the Construction Manager for distribution to Contractors. As agent of the Owner, Construction Manager shall forward payment to Contractor following verification of Owner's disbursement checks. ~~After the Construction Manager and Architect have issued a Project Certificate for Payment, the Owner shall make payment in the manner and within the time provided in the Contract Documents, and shall so notify the Construction Manager and Architect.~~

9.6.2 The Contractor shall promptly pay each Subcontractor, ~~upon~~within five (5) days of receipt of payment from the Owner or Construction Manager, out of the amount paid to the Contractor on account of such Subcontractor's portion of the Work, the amount to which said Subcontractor is entitled, reflecting percentages actually retained from payments to the Contractor on account of such Subcontractor's portion of the Work. The Contractor shall, by appropriate agreement with each Subcontractor, require each Subcontractor to make payments to Sub-subcontractors in similar manner.

9.6.3 The Construction Manager ~~will, on request~~ may, on request, and in the Construction Manager's discretion, furnish to a Subcontractor, if practicable, information regarding percentages of completion or amounts applied for by the Contractor and action taken thereon by the Owner, Construction Manager and Architect on account of portions of the Work done by such Subcontractor.

9.6.4 Neither the Owner, Construction Manager nor Architect shall have an obligation to pay or to see to the payment of money to a Subcontractor except as may otherwise be required by law. However, if either Owner, Construction Manager or Architect has cause for concern of whether all payments have been made or will be made as required to subcontractors, laborers or suppliers or creditors of the Subcontractor, Owner, Construction Manager or Architect, in their sole discretion, and without limiting other remedies, after seventy-two (72) hours notice to Contractor, have the right to issue payments either by joint check, payable to both Contractor and the subcontractor, laborer, supplier or creditor, or directly to the subcontractor, laborer, supplier or creditor. Such payments shall be applied against the Contract Sum to the same extent as if the payment were made solely to the Contractor. The Owner, Construction Manager or Architect's rights to issue joint checks or direct payments shall in no event create an obligation on the part of the Owner, Construction Manager or Architect to exercise this right on behalf of a subcontractor, labor, supplier or creditor.

9.6.5 Payment to material suppliers shall be treated in a manner similar to that provided in Subparagraphs 9.6.2, 9.6.3 and 9.6.4.

9.6.6 A Certificate for Payment, a progress payment, or partial or entire use or occupancy of the Project by the Owner shall not constitute acceptance of Work not in accordance with the Contract Documents.

9.7 FAILURE OF PAYMENT

9.7.1 If the Construction Manager should fail to issue recommendations within fourteen (14) days of receipt of the Contractor's Application for Payment, or if, through no fault of the Contractor, the Architect does not issue a Project Certificate for Payment within fourteen (14) days after the Architect's receipt of the Project Application for Payment, or if the Owner does not pay the Contractor within fourteen (14) days after the date established in the Contract Documents any amount certified by the Architect or awarded by arbitration, then the Contractor may, upon fourteen (14) additional days' written notice to the Owner, the Architect and the Construction Manager, stop Work until payment of the amount owing has been received. The Contract Sum shall be increased by the amount of the Contractor's reasonable costs of shut-down, delay and start-up, which shall be accomplished as provided in Article 7. ~~If, through no fault of the Contractor, 1) the Construction Manager and Architect do not issue a Project Certificate for Payment within fourteen days after the Construction Manager's receipt of the Contractor's Application for Payment or 2) the Owner does not pay the Contractor within seven days after the date established in the Contract Documents the amount certified by the Construction Manager and Architect or awarded by arbitration, then the Contractor may, upon seven additional days' written notice to the Owner, Construction Manager and Architect, stop the Work until payment of the amount owing has been received. The Contract Time shall be extended appropriately and the Contract Sum shall be increased by the amount of the Contractor's reasonable costs of shut down, delay and start up, which shall be accomplished as provided in Article 7.~~

© 1992 THE AMERICAN INSTITUTE OF ARCHITECTS, 1735 NEW YORK AVENUE, N.W., WASHINGTON, D.C., 20006-5292. AIA DOCUMENT A201/CMa - GENERAL CONDITIONS OF THE CONTRACT FOR CONSTRUCTION - CONSTRUCTION MANAGER-ADVISER EDITION - 1992 EDITION - AIA® - WARNING: Unlicensed photocopying violates U.S. copyright laws and will subject the violator to legal prosecution. This document was electronically produced with permission of the AIA and can be reproduced in accordance with your license without violation until the date of expiration as noted below. expiration as noted below. expiration as noted below. User Document: a201cma pe group final january 1, 2004.aia -- 1/13/2004. AIA License Number 1015952, which expires on 6/20/2004.

9.7.2 If the Owner is entitled to reimbursement or payment from the Contractor under or pursuant to the Contract Documents, such payment shall be made promptly upon demand by the Owner. Notwithstanding anything contained in the Contract Documents to the contrary, if the Contractor fails to promptly make any payment due the Owner, or the Owner incurs any costs and expenses to cure any default of the Contactor or to correct defective Work, the Owner shall have an absolute right to offset such amount against the Contract Sum and may, in the Owner's sole discretion, elect either to deduct an amount equal to that which the Owner is entitled from any payment then or thereafter due the Contractor from the Owner, or issue a written notice to the Contractor reducing the Contract Sum by an amount equal to that which the Owner is entitled.

9.8 SUBSTANTIAL COMPLETION

9.8.1 Substantial Completion is the stage in the progress of the Work when the Work or designated portion thereof is sufficiently complete in accordance with the Contract Documents so the Owner can occupy or utilize the Work for its intended use.

9.8.2 When the Contractor considers that the Work, or a portion thereof which the Owner agrees to accept separately, is substantially complete, the Contractor ~~and Construction Manager~~ shall ~~jointly~~ prepare and submit to the Architect through the Construction Manager a comprehensive list of items to be completed or corrected. The Contractor shall proceed promptly to complete and correct items on the list. Failure to include an item on such list does not alter the responsibility of the Contractor to complete all Work in accordance with the Contract Documents. Upon receipt of the list, the Architect, assisted by the Construction Manager, will make an inspection to determine whether the Work or designated portion thereof is substantially complete. If the Architect's inspection discloses any item, whether or not included on the list, which is not in accordance with the requirements of the Contract Documents, the Contractor shall, before issuance of the Certificate of Substantial Completion, complete or correct such item upon notification by the Architect. The Contractor shall then submit through the Construction Manager a request for another inspection by the Architect, assisted by the Construction Manager, to determine Substantial Completion. When the Work or designated portion thereof is substantially complete, the Architect will prepare a Certificate of Substantial Completion which shall establish the date of Substantial Completion, shall establish responsibilities of the Owner and Contractor for security, maintenance, heat, utilities, damage to the Work and insurance, and shall fix the time within which the Contractor shall finish all items on the list accompanying the Certificate. Warranties required by the Contract Documents shall commence on the date of Substantial Completion of the Work or designated portion thereof unless otherwise provided in the Certificate of Substantial Completion. The Certificate of Substantial Completion shall be submitted to the Owner and Contractor for their written acceptance of responsibilities assigned to them in such Certificate. In no case shall the Contractor's final completion of the Work and contract closeout (see Project Manual Section 01700 - Contract Closeout) exceed sixty (60) days from the date of issuance of the Certificate of Substantial Completion. In the event Contractor fails to complete the Work within the sixty (60) day period, the Owner may, in addition to all of its other rights and remedies under the Contract and at law and/or equity, complete the Contractor's Work at the sole expense of Contractor. Owner shall be entitled to deduct from the final payment all costs and expenses incurred in completing the Work, including additional Construction Management and Architecture fees and costs. In the event the costs exceed the amounts being withheld by Owner for final payment, the Contractor or its surety shall make the excess payment within five (5) days of demand by the Owner.

9.8.3 Upon Substantial Completion of the Work or designated portion thereof and upon application by the Contractor and certification by the Construction Manager and Architect, the Owner ~~shall~~ or Construction Manager may make payment, reflecting adjustment in retainage, if any, for such Work or portion thereof as provided in the Contract Documents.

9.8.3.1 Within thirty (30) days after Certificate of Substantial Completion has been issued for all portions of its Work, Contractor may be paid at the discretion of the Construction Manager and Owner, a sum sufficient to increase total payments to One Hundred Percent (100%) of Contract Sum, or portion thereof, less such retainage as Architect and Construction Manager determine in their sole discretion is necessary to protect Owner for any and all incomplete work and unsettled claims.

9.9 PARTIAL OCCUPANCY OR USE

9.9.1 The Owner reserves the right to occupy the whole or any portion of the premises at any time prior to completion of the Work provided such occupancy or use is consented to by the insurer as required under Subparagraph 11.3.11 and authorized by public authorities having jurisdiction over the Work. It is understood and agreed that the right to use the premises is part of the Contract and the Contractor has taken this possibility into account when preparing its bid, and that the Contractor shall proceed with the Work in such a manner as may be directed and shall cooperate with the Owner to limit interruptions to the Owner's routine operations. ~~The Owner may occupy or use any completed or partially completed portion of the Work at any stage when such portion is designated by separate agreement with the Contractor, provided such occupancy or use is consented to by~~

© 1992 THE AMERICAN INSTITUTE OF ARCHITECTS, 1735 NEW YORK AVENUE, N.W., WASHINGTON, D.C., 20006-5292. AIA DOCUMENT A201/CMa - GENERAL CONDITIONS OF THE CONTRACT FOR CONSTRUCTION - CONSTRUCTION MANAGER-ADVISER EDITION - 1992 EDITION - AIA® - WARNING: Unlicensed photocopying violates U.S. copyright laws and will subject the violator to legal prosecution. This document was electronically produced with permission of the AIA and can be reproduced in accordance with your license without violation until the date of expiration as noted below. expiration as noted below. expiration as noted below. User Document: a201cma pe group final january 1, 2004.aia -- 1/13/2004. AIA License Number 1015952, which expires on 6/20/2004.

~~the insurer as required under Subparagraph 11.3.1 and authorized by public authorities having jurisdiction over the Work.~~ Such partial occupancy or use may commence whether or not the portion is substantially complete, provided the Owner and Contractor have accepted in writing the responsibilities assigned to each of them for payments, retainage if any, security, maintenance, heat, utilities, damage to the Work and insurance, and have agreed in writing concerning the period for correction of the Work and commencement of warranties required by the Contract Documents. When the Contractor considers a portion substantially complete, the Contractor ~~and Construction Manager~~ shall ~~jointly~~ prepare and submit a list to the Architect, through the Construction Manager, as provided under Subparagraph 9.8.2. Consent of the Contractor to partial occupancy or use shall not be unreasonably withheld. The stage of the progress of the Work shall be determined by written agreement between the Owner and Contractor or, if no agreement is reached, by decision of the Architect after consultation with the Construction Manager.

9.9.2 Immediately prior to such partial occupancy or use, the Owner, Construction Manager, Contractor and Architect shall jointly inspect the area to be occupied or portion of the Work to be used in order to determine and record the condition of the Work.

9.9.3 Unless otherwise agreed upon, partial occupancy or use of a portion or portions of the Work shall not constitute acceptance of Work not complying with the requirements of the Contract Documents.

9.10 FINAL COMPLETION AND FINAL PAYMENT

9.10.1 Upon completion of the Work, the Contractor shall forward to the Construction Manager a written notice that the Work is ready for final inspection and acceptance and shall also forward to the Construction Manager a final Contractor's Application for Payment. Upon receipt, the Construction Manager will forward the notice and Application to the Architect, along with Construction Manager's recommendation, if any, who will promptly make such inspection. When the Architect, and ~~based on the recommendation of the~~ Construction Manager, finds the Work acceptable under the Contract Documents and the Contract fully performed, the ~~Construction Manager and~~ Architect will promptly issue a final Certificate for Payment stating that to the best of ~~their~~ its knowledge, information and belief, and on the basis of ~~their~~ its observations and inspections, the Work has been completed in accordance with terms and conditions of the Contract Documents and that the entire balance found to be due the Contractor and noted in said final Certificate is due and payable. The ~~Construction Manager's and~~ Architect's approval of the final Certificate for Payment will constitute a further representation that conditions listed in Subparagraph 9.10.2 as precedent to the Contractor's being entitled to final payment have been fulfilled. All warranties and guarantees and specified closeout documents required under or pursuant to the Contract Documents shall be assembled and delivered by the Contractor to the Construction Manager as part of the final Application for Payment (Refer to Project Manual Section 01700 - Contract Closeout, Section 01720 - Project Record Documents, Section 01730 - Operations and Maintenance Data, Section 01740 - Warranties and Guarantees, and Section 01750 - Systems Demonstration, Training and Start Up). The final Certificate for Payment will not be issued by the Architect until all warranties and guarantees and other specified closeout documentation have been received and accepted by the Owner.

9.10.2 Neither final payment nor any remaining retained percentage shall become due until the Contractor submits to the Architect through the Construction Manager (1) an affidavit that payrolls, bills for materials and equipment, and other indebtedness connected with the Work for which the Owner or Construction Manager or the Owner's property might be responsible or encumbered (less amounts withheld by Owner) have been paid or other wise satisfied, (2) a certificate evidencing that insurance required by the Contract Documents to remain in force after final payment is currently in effect and will not be canceled or allowed to expire until at least 30 days' prior written notice has been given to the Owner, (3) a written statement that the Contractor knows of no substantial reason that the insurance will not be renewable to cover the period required by the Contract Documents, (4) consent of surety, if any, to final payment and (5), if required by the Owner or Construction Manager, other data establishing payment or satisfaction of obligations, such as receipts, releases and waivers of liens, claims, security interests or encumbrances arising out of the Contract, to the extent and in such form as may be designated by the Owner or Construction Manager. If a Subcontractor refuses to furnish a release or waiver required by the Owner or Construction Manager, the Contractor may furnish a bond satisfactory to the Owner and Construction Manager to indemnify the Owner and Construction Manager against such lien. If such lien remains unsatisfied after payments are made, the Contractor shall refund to the Owner and/or Construction Manager all money that the Owner and/or Construction Manager may be compelled to pay in discharging such lien, including all costs and reasonable attorneys' fees.

9.10.3 If, after Substantial Completion of the Work, final completion thereof is materially delayed through no fault of the Contractor or by issuance of Change Orders affecting final completion, and the Construction Manager and Architect so confirm, the Owner shall, upon application by the Contractor and certification by the Construction Manager and Architect, and without terminating the Contract, make payment of the balance due for that portion of the Work fully completed and accepted. If the remaining balance for Work not fully completed or corrected is less than retainage stipulated in the Contract Documents, and if bonds have been furnished, the written consent of surety to payment of the balance due for that portion of the Work fully completed and accepted shall be submitted by the Contractor to the Architect through the

© 1992 THE AMERICAN INSTITUTE OF ARCHITECTS, 1735 NEW YORK AVENUE, N.W., WASHINGTON, D.C., 20006-5292. AIA DOCUMENT A201/CMa - GENERAL CONDITIONS OF THE CONTRACT FOR CONSTRUCTION - CONSTRUCTION MANAGER-ADVISER EDITION - 1992 EDITION - AIA® - WARNING: Unlicensed photocopying violates U.S. copyright laws and will subject the violator to legal prosecution. This document was electronically produced with permission of the AIA and can be reproduced in accordance with your license without violation until the date of expiration as noted below. expiration as noted below. expiration as noted below. User Document: a201cma pe group final january 1, 2004.aia -- 1/13/2004. AIA License Number 1015952, which expires on 6/20/2004.

Construction Manager prior to certification of such payment. Such payment shall be made under terms and conditions governing final payment, except that it shall not constitute a waiver of Claims. The making of final payment shall constitute a waiver of Claims by the Owner as provided in Subparagraph 4.4.5.

9.10.4 Acceptance of final payment by the Contractor, a Subcontractor or material supplier shall constitute a waiver of claims by that payee except those previously made in writing and identified by that payee as unsettled at the time of final Application for Payment. Such waivers shall be in addition to the waiver described in Subparagraph 4.7.5. If Contractor fails to submit a final Application for Payment or a final waiver within a reasonable time after request by Construction Manager, and in no event later than sixty (60) days after the issuance of the Certificate of Substantial Completion, the Owner and Construction Manager may unilaterally determine the balance due to the Contractor and the Contractor shall be bound by such determination.

ARTICLE 10
PROTECTION OF PERSONS AND PROPERTY

10.1 SAFETY PRECAUTIONS AND PROGRAMS

10.1.1 The Contractor shall be solely responsible to the Owner and Construction Manager for initiating, maintaining and supervising all safety precautions and programs in connection with the performance of the Contract. The Contractor shall submit the Contractor's safety program to the Construction Manager for review and coordination with the safety programs of other Contractors. Contractor shall be responsible for payment of all fines levied against Owner, Architect or Construction Manager and all costs (including attorney's fees) incurred as a result of such fines arising from or relating to conduct of Contractor's Work.

10.1.2 In the event the Contractor encounters on the site material reasonably believed to be asbestos or polychlorinated biphenyl (PCB), or any other hazardous material, which has not been rendered harmless, the Contractor shall immediately stop Work in the area affected and report the condition to the Owner, Construction Manager and Architect in writing. The Work in the affected area shall not thereafter be resumed except by written agreement of the Owner and Contractor if in fact the material is asbestos or polychlorinated biphenyl (PCB), or any other material deemed hazardous, and has not been rendered harmless. The Work in the affected area shall be resumed in the absence of asbestos, or polychlorinated biphenyl (PCB), or any other hazardous material, or when it has been rendered harmless, by written agreement of the Owner and Contractor, or in accordance with final determination by the Architect on which arbitration has not been demanded, or by arbitration under Article 4. The term "rendered harmless" shall be interpreted to mean that levels of asbestos, polychlorinated biphenyls, and other hazardous materials are less than any applicable exposure standards set forth in OSHA regulations. In no event, however, shall the Owner, Construction Manager or Architect have any responsibility for any substance or material that is brought to the Project site by the Contractor, any Subcontractor, any material supplier, or any entity for whom any of them is responsible. The Contractor agrees not to use any fill or other materials to be incorporated into the Work that are hazardous, toxic, or made up of any items that are hazardous or toxic. Refer to Project Manual Section 00840 - Hazardous Materials.

10.1.3 The Contractor shall not be required pursuant to Article 7 to perform without consent any Work relating to asbestos or polychlorinated biphenyl (PCB), or any other hazardous material.

10.1.4 To the fullest extent permitted by law, the Owner shall indemnify and hold harmless the Contractor, Construction Manager, Architect, their consultants, and agents and employees of any of them from and against claims, damages, losses and expenses, including but not limited to attorneys' fees, arising out of or resulting from performance of the Work in the affected area if in fact the material is asbestos or polychlorinated biphenyl (PCB) and has not been rendered harmless, provided that such claim, damage, loss or expense is attributable to bodily injury, sickness, disease or death, or to injury to or destruction of tangible property (other than the Work itself) including loss of use resulting therefrom, but only to the extent caused in whole or in part by negligent acts or omissions of the Owner, anyone directly or indirectly employed by the Owner or anyone for whose acts the Owner may be liable, regardless of whether or not such claim, damage, loss or expense is caused in part by a party indemnified hereunder. Such obligation shall not be construed to negate, abridge or reduce other rights or obligations of indemnity which would otherwise exist as to a party or person described in this Subparagraph 10.1.4.

10.1.5 If reasonable precautions will be inadequate to prevent foreseeable bodily injury or death to persons resulting from a material or substance encountered on the site by the Contractor, the Contractor shall, upon recognizing the condition, immediately stop Work in the affected area and report the condition to the Owner, Construction Manager and Architect in writing. The Owner, Contractor, Construction Manager and Architect shall then proceed in the same manner described in Subparagraph 10.1.2.

10.1.6 The Owner shall be responsible for obtaining the services of a licensed laboratory to verify a presence or absence of the material or substance reported by the Contractor and, in the event such material or substance is found to be present, to verify that it has been rendered harmless. Unless otherwise required by the Contract Documents, the Owner shall furnish in writing to the Contractor, Construction Manager and

© 1992 THE AMERICAN INSTITUTE OF ARCHITECTS, 1735 NEW YORK AVENUE, N.W., WASHINGTON, D.C., 20006-5292. AIA DOCUMENT A201/CMa - GENERAL CONDITIONS OF THE CONTRACT FOR CONSTRUCTION - CONSTRUCTION MANAGER-ADVISER EDITION - 1992 EDITION - AIA® - WARNING: Unlicensed photocopying violates U.S. copyright laws and will subject the violator to legal prosecution. This document was electronically produced with permission of the AIA and can be reproduced in accordance with your license without violation until the date of expiration as noted below. expiration as noted below. expiration as noted below. User Document: a201cma pe group final january 1, 2004.aia -- 1/13/2004. AIA License Number 1015952, which expires on 6/20/2004.

Architect the names and qualifications of persons or entities who are to perform tests verifying the presence or absence of such material or substance or who are to perform the task of removal or safe containment of such material or substance. The Contractor, the Construction Manager and the Architect will promptly reply to the Owner in writing stating whether or not any of them has reasonable objection to the persons or entities proposed by the Owner. If the Contractor, Construction Manager or Architect has an objection to a person or entity proposed by the Owner, the Owner shall propose another to whom the Contractor, the Construction Manager and the Architect have no reasonable objection.

10.2 SAFETY OF PERSONS AND PROPERTY

10.2.1 The Contractor shall take ~~reasonable~~ all necessary or appropriate precautions for safety of, and shall provide ~~reasonable~~ all necessary or appropriate protection to prevent damage, injury or loss to:

.1 all employees involved in the Project and all other persons who may be affected thereby; ~~employees on the Work of other persons who may be affected thereby;~~

.2 the Work and materials and equipment to be incorporated therein, whether in storage on or off the site, under care, custody or control of the Contractor or the Contractor's Subcontractors or Sub-subcontractors;

.3 other property at the site or adjacent thereto, such as, but not limited to, trees, shrubs, lawns, walks, pavements, roadways, structures and utilities not designated for removal, relocation or replacement in the course of construction; and

.4 construction or operations by the Owner, the Construction Manager or other Contractors.

10.2.2 The Contractor shall give notices and comply with applicable laws, ordinances, rules, regulations and lawful orders of public authorities bearing on safety of persons or property or their protection from damage, injury or loss.

10.2.3 The Contractor shall erect and maintain, as required by existing conditions and performance of the Contract, ~~reasonable~~ all necessary or appropriate safeguards for safety and protection, including posting danger signs and other warnings against hazards, promulgating safety regulations and notifying owners and users of adjacent sites and utilities. The Contractor shall also be responsible, at the Contractor's sole cost and expense, for all measures necessary to protect any property and improvements adjacent to the Project. Any damages to such property or improvements shall be promptly repaired by the Contractor. Without limiting the indemnity provisions elsewhere in the Contract Documents, the Contractor shall indemnify and hold harmless the Owner and Construction Manager from and against any and all actions or damages arising out of or resulting from damage to such property or improvements.

10.2.4 Use of explosives is not permitted. When use or storage of hazardous substances or equipment, or unusual construction methods are necessary, Contractor shall give Owner, Construction Manager and Architect reasonable advanced notice. When driving or removing piles, wrecking, performing excavation work or other similar potentially dangerous work, the Contractor shall provide protection and exercise utmost care, under supervision of properly qualified personnel, so as not to endanger life or property. Contractor is fully responsible for any and all damages, claims and for defense of all actions against Owner, Construction Manager and Architect resulting from prosecution of such work in connection with or arising out of the Contract. ~~When use for storage of explosives or other hazardous materials or equipment or unusual methods are necessary for execution of the Work, the Contractor shall exercise utmost care and carry on such activities under supervision of properly qualified personnel.~~

10.2.5 The Contractor shall promptly remedy damage and loss (other than damage or loss insured under property insurance required by the Contract Documents) to property referred to in Clauses 10.2.1.2, 10.2.1.3 and 10.2.1.4 caused in whole or in part by the Contractor, a Subcontractor, a Sub-subcontractor, or anyone directly or indirectly employed by any of them, or by anyone for whose acts they may be liable and for which the Contractor is responsible under Clauses 10.2.1.2, 10.2.1.3 and 10.2.1.4, except damage or loss attributable to acts or omissions of the Owner, Construction Manager or Architect or anyone directly or indirectly employed by any of them, or by anyone for whose acts any of them may be liable, and not attributable to the fault or negligence of the Contractor. The foregoing obligations of the Contractor are in addition to the Contractor's obligations under Paragraph 3.18.

10.2.6 The Contractor shall designate a responsible member of the Contractor's organization at the site whose duty shall be the prevention of accidents. This person shall be the Contractor's superintendent unless otherwise designated by the Contractor in writing to the Owner, Construction Manager and Architect.

10.2.7 The Contractor shall not load or permit any part of the construction or site to be loaded so as to endanger its safety.

10.2.8 When all or a portion of the Work is suspended for any reason, the Contractor shall securely fasten down all coverings and protect the Work, as necessary, from injury by any cause.

© 1992 THE AMERICAN INSTITUTE OF ARCHITECTS, 1735 NEW YORK AVENUE, N.W., WASHINGTON, D.C., 20006-5292. AIA DOCUMENT A201/CMa - GENERAL CONDITIONS OF THE CONTRACT FOR CONSTRUCTION - CONSTRUCTION MANAGER-ADVISER EDITION - 1992 EDITION - AIA® - WARNING: Unlicensed photocopying violates U.S. copyright laws and will subject the violator to legal prosecution. This document was electronically produced with permission of the AIA and can be reproduced in accordance with your license without violation until the date of expiration as noted below. expiration as noted below. expiration as noted below. User Document: a201cma pe group final january 1, 2004.aia -- 1/13/2004. AIA License Number 1015952, which expires on 6/20/2004.

10.2.9 The Contractor shall promptly report by telephone and in writing to the Owner, Construction Manager and Architect all accidents arising out of or in connection with the Work that cause death, personal injury, or property damage, giving full details and observations of any witnesses. See Project Manual Section 00810 - Safety Program.

10.3 EMERGENCIES

10.3.1 In an emergency affecting safety or persons or property, the Contractor shall act, at the Contractor's discretion, to prevent threatened damage, injury or loss. Additional compensation or extension of time claimed by the Contractor on account of an emergency shall be determined as provided in Paragraph 4.7 and Article 7.

ARTICLE 11
INSURANCE AND BONDS

11.1 CONTRACTOR'S LIABILITY INSURANCE

11.1.1 The Contractor shall purchase from and maintain in a company or companies lawfully authorized to do business in the jurisdiction in which the Project is located such insurance as will protect the Contractor from claims set forth below which may arise out of or result from the Contractor's operations under the Contract and for which the Contractor may be legally liable, whether such operations be by the Contractor or by a Subcontractor or by anyone directly or indirectly employed by any of them, or by anyone for whose acts any of them may be liable:

.1 claims under workers compensation, disability benefit and other similar employee benefit acts which are applicable to the Work to be performed;

.2 claims for damages because of bodily injury, occupational sickness or disease, or death of the Contractor's employees;

.3 claims for damages because of bodily injury, sickness or disease, or death of any person other than the Contractor's employees;

.4 claims for damages insured by usual personal injury liability coverage which are sustained (1) by a person as a result of an offense directly or indirectly related to employment of such person by the Contractor, or (2) by another person;

.5 claims for damages, other than to the Work itself, because of injury to or destruction of tangible property, including loss of use resulting therefrom;

.6 claims for damages because of bodily injury, death of a person or property damage arising out of ownership, maintenance or use of a motor vehicle; and

.7 claims involving contractual liability insurance applicable to the Contractor's obligations under Paragraph 3.18.

.8 The Contractor's liability insurance shall include all major divisions of coverage and be on a comprehensive basis, including, without limitation:

(1) Premises/Operations (including X, C, and U coverages as applicable).
(2) Independent Contractors' Protective.
(3) Products and Completed Operations.
(4) Personal Injury Liability with Employment Exclusion deleted.
(5) Contractual, including specified provision for Contractor's obligations under Paragraph 3.18.
(6) Owned, nonowned, and hired motor vehicles.
(7) Broad Form Property Damage, including Completed Operations.

The Contractor's insurance shall meet all additional insurance requirements set forth in the Project Manual Section 00620 - Insurance.

.9 If the Contractor has design responsiblity under the Contract Documents, the Contractor shall procure and maintain professional liability insurance in a form and substance that is satisfactory to the Owner. See Project Manual Section 00620 - Insurance.

.10 If the Work involves hazardous waste, hazardous material or asbestos, the Contractor shall procure and maintain pollution liability insurance in a form and substance that is satisfactory to the Owner. See Project Manual Section 00620 - Insurance.

11.1.2 ~~The insurance required by Subparagraph 11.1.1 shall be written for not less than limits of liability specified in the Contract Documents or required by law, whichever coverage is greater. Coverages, whether written on an occurrence or claims-made basis, shall be maintained without interruption from date of commencement of the Work until date of final payment and termination of any coverage required to be maintained after final payment.~~ Refer to Project Manual Section 00620 - Insurance for the specific required coverages, limits, endorsements and time periods that Contractor's insurance must be maintained.

© 1992 THE AMERICAN INSTITUTE OF ARCHITECTS, 1735 NEW YORK AVENUE, N.W., WASHINGTON, D.C., 20006-5292. AIA DOCUMENT A201/CMa - GENERAL CONDITIONS OF THE CONTRACT FOR CONSTRUCTION - CONSTRUCTION MANAGER-ADVISER EDITION - 1992 EDITION - AIA® - WARNING: Unlicensed photocopying violates U.S. copyright laws and will subject the violator to legal prosecution. This document was electronically produced with permission of the AIA and can be reproduced in accordance with your license without violation until the date of expiration as noted below. expiration as noted below. expiration as noted below. User Document: a201cma pe group final january 1, 2004.aia -- 1/13/2004. AIA License Number 1015952, which expires on 6/20/2004.

~~11.1.3 Certificates of insurance acceptable to the Owner shall be submitted to the Construction Manager for transmittal to the Owner with a copy to the Architect prior to commencement of the Work. These certificates and the insurance policies required by this Paragraph 11.1 shall contain a provision that coverages afforded under the policies will not be canceled or allowed to expire until at least 30 days' prior written notice has been given to the Owner. If any of the foregoing insurance coverages are required to remain in force after final payment and are reasonably available, an additional certificate evidencing continuation of such coverage shall be submitted with the final Application for Payment as required by Subparagraph 9.10.2. Information concerning reduction of coverage shall be furnished by the Contractor with reasonable promptness in accordance with the Contractor's information and belief.~~ The Contractor agrees to deliver to the Construction Manager, within ten (10) days of the date of the Owner-Contractor Agreement and prior to bringing any equipment or personnel onto the site of the Work or the Project site, certified copies of all insurance policies procured by the Contractor under or pursuant to this Paragraph 11.1 or, with consent of the Owner and Construction Manager, Certificates of Insurance in form and substance satisfactory to the Owner and Construction Manager evidencing the required coverages with limits not less than those specified in the Project Manual Section 00620 - Insurance. The coverage afforded under any insurance policy obtained under or pursuant to this Paragraph 11.1 shall be primary and not excess over or contributory with any valid and collectible insurance carried separately by any of the Indemnitees. Furthermore, all policies and Certificates of Insurance shall expressly provide that no less than thirty (30) days' prior written notice shall be given the Construction Manager, Architect, and Owner in the event of material alteration, cancellation, nonrenewal, or expiration of the coverage contained in such policy or evidenced by such certified copy or Certificate of Insurance. The Owner and Construction Manager ("Barton Malow Company") shall be named additional insureds on the General Liability, Excess Liability, Pollution Liability and Auto Coverage and the policy endorsement form must be the ISO Additional Insured - Owners, Lessees or Contractors (Form B) CG2010 11 85, CG2026 11 85 or an equivalent and must provide additional insured status during completion operations.

11.1.4 In no event shall any failure of the Construction Manager or Owner to receive certified copies or certificates or policies required under Paragraph 11.1 or to demand receipt of such certified copies or certificates prior to the Contractor's commencing the Work be construed as a waiver by the Owner of the Contactor's obligations to obtain insurance pursuant to this Article 11.

11.1.5 When any required insurance, due to the attainment of a normal expiration date or renewal date, shall expire, the Contractor shall furnish to the Construction Manager Certificates of Insurance and amendatory riders or endorsements that clearly evidence the continuation of all coverage in the same manner, limits of protection, and scope of coverage as was provided by the previous policy. In the event any renewal or replacement policy, for whatever reason obtained or required, is written by a carrier other than that with whom the coverage was previously placed, or the subsequent policy differs in any way from the previous policy, the Contractor shall also furnish the Construction Manager with a certified copy of the renewal or replacement policy unless the Owner provides the Contractor with prior written consent to submit only a Certificate of Insurance for any such policy. All renewal and replacement policies shall be in the form and substance satisfactory to the Owner and written by carriers acceptable to the Owner.

11.1.6 Any aggregate limit under the Contractor's liability insurance shall, by endorsement, apply to this Project separately.

11.1.7 Where the provisions of this Paragraph 11.1 and the Project Manual Section 00620 - Insurance conflict, the stricter provision requiring the more extensive insurance coverage shall control.

11.2 OWNER'S LIABILITY INSURANCE

11.2.1 The Owner shall be responsible for purchasing and maintaining the Owner's usual liability insurance. Optionally, the Owner may purchase and maintain other insurance for self-protection against claims which may arise from operations under the Contract. The Contractor shall not be responsible for purchasing and maintaining this optional Owner's liability insurance unless specifically required by the Contract Documents.

11.3 PROPERTY INSURANCE

11.3.1 Unless otherwise provided, the Owner shall purchase and maintain, in a company or companies lawfully authorized to do business in the jurisdiction in which the Project is located, property insurance in the amount of the initial Contract Sum as well as subsequent modifications thereto for the entire Work at the site on a replacement cost basis without voluntary deductibles. Such property insurance shall be maintained, unless otherwise provided in the Contract Documents or otherwise agreed in writing by all persons and entities who are beneficiaries of such insurance, until final payment has been made as provided in Paragraph 9.10 or until no person or entity other than the Owner has an insurable interest in the property required by this Paragraph 11.3 to be covered, whichever is earlier. This insurance shall include

© 1992 THE AMERICAN INSTITUTE OF ARCHITECTS, 1735 NEW YORK AVENUE, N.W., WASHINGTON, D.C., 20006-5292. AIA DOCUMENT A201/CMa - GENERAL CONDITIONS OF THE CONTRACT FOR CONSTRUCTION - CONSTRUCTION MANAGER-ADVISER EDITION - 1992 EDITION - AIA® - WARNING: Unlicensed photocopying violates U.S. copyright laws and will subject the violator to legal prosecution. This document was electronically produced with permission of the AIA and can be reproduced in accordance with your license without violation until the date of expiration as noted below. expiration as noted below. expiration as noted below. User Document: a201cma pe group final january 1, 2004.aia -- 1/13/2004. AIA License Number 1015952, which expires on 6/20/2004.

interests of the Owner, the Contractor, Subcontractors and Sub-subcontractors in the Work.

11.3.1.1 Property insurance shall be on an "all-risk" policy form and shall insure against the perils of fire and extended coverage and physical loss or damage including, without duplication of coverage, theft, vandalism, malicious mischief, collapse, falsework, temporary buildings and debris removal including demolition occasioned by enforcement of any applicable legal requirements, and shall cover reasonable compensation for Architect's services and expenses required as a result of such insured loss. Coverage for other perils shall not be required unless otherwise provided in the Contract Documents.

11.3.1.2 If the Owner does not intend to purchase such property insurance required by the Contract and with all of the coverages in the amount described above, the Owner shall so inform the Contractor in writing prior to commencement of the Work. The Contractor may then effect insurance which will protect the interests of the Contractor, Subcontractors and Sub-subcontractors in the Work, and by appropriate Change Order the cost thereof shall be charged to the Owner. If the Contractor is damaged by the failure or neglect of the Owner to purchase or maintain insurance as described above, without so notifying the Contractor, then the Owner shall bear all reasonable costs properly attributable thereto.

11.3.1.3 If the property insurance requires minimum deductibles and such deductibles are identified in the Contract Documents, the Contractor shall pay costs not covered because of such deductibles. If the Owner or insurer increases the required minimum deductibles above the amounts so identified or if the Owner elects to purchase this insurance with voluntary deductible amounts, the Owner shall be responsible for payment of the additional costs not covered because of such increased or voluntary deductibles.

~~11.3.1.4 Unless otherwise provided in the Contract Documents, this property insurance shall cover portions of the Work stored off the site after written approval of the Owner at the value established in the approval, and also portions of the Work in transit.~~

11.3.1.5 The insurance required by this Paragraph 11.3 is not intended to cover machinery, tools or equipment owned or rented by the Contractor which are utilized in the performance of the Work but not incorporated into the permanent improvements. The Contractor shall, at the Contractor's own expense, provide insurance coverage for owned or rented machinery, tools or equipment which shall be subject to the provisions of Subparagraph 11.3.7. Refer to Project Manual Section 00620 - Insurance.

11.3.2 Boiler and Machinery Insurance. The Owner shall purchase and maintain boiler and machinery insurance required by the Contract Documents or by law, which shall specifically cover such insured objects during installation and until final acceptance by the Owner; this insurance shall include interests of the Owner, Construction Manager, Contractor, Subcontractors and Sub-subcontractors in the Work, and the Owner and Contractor shall be named insureds.

11.3.3 Loss of Use Insurance. The Owner, at the Owner's option, may purchase and maintain such insurance as will insure the Owner against loss of use of the Owner's property due to fire or other hazards, however caused. ~~The Owner waives all rights of action against the Contractor for loss of use of the Owner's property, including consequential losses due to fire or other hazards however caused.~~

11.3.4 The Owner and Construction Manager, "Barton Malow Company", shall be named as an additional insured on all property and liability policies. Refer to Project Manual 00620 - Insurance. ~~If the Contractor requests in writing that insurance for risks other than those described herein or for other special hazards be included in the property insurance policy, the Owner shall, if possible, include such insurance, and the cost thereof shall be charged to the Contractor by appropriate Change Order.~~

11.3.5 If during the Project construction period the Owner insures properties, real or personal or both, adjoining or adjacent to the site by property insurance under policies separate from those insuring the Project, or if after final payment property insurance is to be provided on the completed Project through a policy or policies other than those insuring the Project during the construction period, the Owner shall waive all rights in accordance with the terms of Subparagraph 11.3.7 for damages caused by fire or other perils covered by this separate property insurance. All separate policies shall provide this waiver of subrogation by endorsement or otherwise.

11.3.6 Before an exposure to loss may occur, the Owner shall file with the ~~Contractor~~ Construction Manager a copy of each policy that includes insurance coverages required by this Paragraph 11.3. Each policy shall contain all generally applicable conditions, definitions, exclusions and endorsements related to this Project. Each policy shall contain a provision that the policy will not be canceled or allowed to expire until at least 30 days' prior written notice has been given to the Contractor.

11.3.7 Waivers of Subrogation. The Owner and Contractor waive all rights against each other and against the Construction Manager, Architect, Owner's other Contractors and own forces described in Article 6, if any, and the subcontractors, sub-subcontractors, consultants, agents and employees of any of them, for damages caused by fire or other perils to the extent covered by property insurance obtained pursuant to this Paragraph 11.3 or other property insurance applicable to the Work, except such rights as the Owner and Contractor may have to the proceeds of such insurance held by the Owner as fiduciary. The Owner or Contractor, as appropriate, shall require of the Construction Manager, Construction Manager's consultants, Architect, Architect's consultants, Owner's separate contractors described in Article 6, if any, and the subcontractors, sub-subcontractors, agents and employees of any of them, by appropriate agreements, written where legally required for validity, similar waivers each

© 1992 THE AMERICAN INSTITUTE OF ARCHITECTS, 1735 NEW YORK AVENUE, N.W., WASHINGTON, D.C., 20006-5292. AIA DOCUMENT A201/CMa - GENERAL CONDITIONS OF THE CONTRACT FOR CONSTRUCTION - CONSTRUCTION MANAGER-ADVISER EDITION - 1992 EDITION - AIA® - WARNING: Unlicensed photocopying violates U.S. copyright laws and will subject the violator to legal prosecution. This document was electronically produced with permission of the AIA and can be reproduced in accordance with your license without violation until the date of expiration as noted below. expiration as noted below. expiration as noted below. User Document: a201cma pe group final january 1, 2004.aia -- 1/13/2004. AIA License Number 1015952, which expires on 6/20/2004.

in favor of other parties enumerated herein. The policies shall provide such waivers of subrogation by endorsement or otherwise. A waiver of subrogation shall be effective as to a person or entity even though that person or entity would otherwise have a duty of indemnification, contractual or otherwise, did not pay the insurance premium directly or indirectly, and whether or not the person or entity had an insurable interest in the property damaged. This section shall be deemed null and void if its enforcement jeopardizes the Owner's insurance coverage.

11.3.8 A loss insured under Owner's property insurance shall be adjusted by the Owner as fiduciary through the Construction Manager and made payable to the Owner as fiduciary for the insureds, as their interests may appear, subject to requirements of any applicable mortgagee clause and of Subparagraph 11.3.10. The Contractor shall pay Subcontractors their just shares of insurance proceeds received by the Contractor, and by appropriate agreements, written where legally required for validity, shall require Subcontractors to make payments to their Sub-subcontractors in similar manner.

11.3.9 If required in writing by a party in interest, the Owner as fiduciary shall, upon occurrence of an insured loss, give bond for proper performance of the Owner's duties. The cost of required bonds shall be charged against proceeds received as fiduciary. The Owner shall deposit in a separate account proceeds so received, which the Owner shall distribute in accordance with such agreement as the parties in interest may reach, or in accordance with an arbitration award in which case the procedure shall be as provided in Paragraph 4.9. If after such loss no other special agreement is made, replacement of damaged property shall be covered by appropriate Change Order.

11.3.10 The Owner as fiduciary shall have power to adjust and settle a loss with insurers unless one of the parties in interest shall object in writing within five days after occurrence of loss to the Owner's exercise of this power; if such objection be made, arbitrators shall be chosen as provided in Paragraph 4.9. The Owner as fiduciary shall, in that case, make settlement with insurers in accordance with directions of such arbitrators. If distribution of insurance proceeds by arbitration is required, the arbitrators will direct such distribution.

11.3.11 Partial occupancy or use in accordance with Paragraph 9.9 shall not commence until the insurance company or companies providing property insurance have consented to such partial occupancy or use by endorsement or otherwise. The Owner and the Contractor shall take reasonable steps to obtain consent of the insurance company or companies and shall, without mutual written consent, take no action with respect to partial occupancy or use that would cause cancellation, lapse or reduction of insurance.

11.4 PERFORMANCE BOND AND PAYMENT BOND

11.4.1 The Contractor shall furnish performance and labor and material payment bonds, in a form satisfactory to the Construction Manager and Owner, and each in the amount of One-Hundred Percent (100%) of its contract amount (unless a lesser amount is specifically authorized in Project Manual Section 00610 - Bonds) covering all Work to be performed by the contractor and its subcontractors and suppliers. The Bonds shall be written in favor of both the Construction Manager and the Owner as dual obligees, using a dual obligee rider that is acceptable to the Owner and the Construction Manager. The Bonds shall also meet all additional requirements set forth in Project Manual Section 00610 - Bonds. ~~The Owner shall have the right to require the Contractor to furnish bonds covering faithful performance of the Contract and payment of obligations arising thereunder as stipulated in bidding requirements or specifically required in the Contract Documents on the date of execution of the Contract.~~

11.4.2 Upon the request of any person or entity appearing to be a potential beneficiary of bonds covering payment of obligations arising under the Contract, the Contractor shall promptly furnish a copy of the bonds or shall permit a copy to be made.

11.4.3 Additional Performance and Payment Bonds may be required by the Owner, in the Owner's sole discretion, from any Subcontractor. The Owner shall pay for any premiums charged for obtaining required Subcontractor bonds by executing a Change Order that shall increase the Contract Sum in an amount equal to such premiums. All such bonds shall be in form and substance satisfactory to the Owner in the Owner's sole judgment.

ARTICLE 12
UNCOVERING AND CORRECTION OF WORK

12.1 UNCOVERING OF WORK

12.1.1 If a portion of the Work is covered contrary to the Construction Manager's or Architect's request or to requirements specifically expressed in the Contract Documents, it must, if required in writing by either, be uncovered for their observation and be replaced at the Contractor's expense without change in the Contract Time.

12.1.2 If a portion of the Work has been covered which the Construction Manager or Architect has not specifically requested to observe prior to its being covered, the Construction Manager or Architect may request to see such Work and it shall be uncovered by the Contractor. If such Work is in accordance with the Contract Documents, costs of uncovering and replacement shall, by appropriate Change Order, be charged to the Owner. If such Work is not in accordance with the Contract Documents, the Contractor shall pay such costs unless the condition was caused by the Owner or one of the other Contractors in which event the Owner shall be responsible for payment of such costs.

© 1992 THE AMERICAN INSTITUTE OF ARCHITECTS, 1735 NEW YORK AVENUE, N.W., WASHINGTON, D.C., 20006-5292. AIA DOCUMENT A201/CMa - GENERAL CONDITIONS OF THE CONTRACT FOR CONSTRUCTION - CONSTRUCTION MANAGER-ADVISER EDITION - 1992 EDITION - AIA® - WARNING: Unlicensed photocopying violates U.S. copyright laws and will subject the violator to legal prosecution. This document was electronically produced with permission of the AIA and can be reproduced in accordance with your license without violation until the date of expiration as noted below. expiration as noted below. expiration as noted below. User Document: a201cma pe group final january 1, 2004.aia -- 1/13/2004. AIA License Number 1015952, which expires on 6/20/2004.

12.2 CORRECTION OF WORK

12.2.1 The Contractor shall promptly correct Work rejected by the Construction Manager or Architect or failing to conform to the requirements of the Contract Documents, whether observed before or after Substantial Completion and whether or not fabricated, installed or completed. The Contractor shall bear costs of correcting such rejected Work, including additional testing and inspections and compensation for the Construction Manager's and Architect's services and expenses made necessary thereby.

12.2.2 If, within one year after the date of Substantial Completion of the Work or designated portion thereof, or after the date for commencement of warranties established under Subparagraph 9.9.1, or by terms of an applicable special warranty required by the Contract Documents, any of the Work is found to be not in accordance with the requirements of the Contract Documents, the Contractor shall correct it promptly after receipt of written notice from the Owner or Construction Manager to do so unless the Owner or Construction Manager has previously given the Contractor a written acceptance of such condition. This period of one year shall be extended with respect to portions of Work first performed after Substantial Completion by the period of time between Substantial Completion and the actual performance of the Work. This obligation under this Subparagraph 12.2.2 shall survive acceptance of the Work under the Contract and termination of the Contract. The Owner shall give such notice promptly after discovery of the condition. Refer to Project Manual Section 01740 - Warranties and Guarantees.

12.2.3 The Contractor shall remove from the site portions of the Work which are not in accordance with the requirements of the Contract Documents and are neither corrected by the Contractor nor accepted by the Owner.

12.2.4 If the Contractor fails to correct nonconforming Work within a reasonable time, the Owner may correct it in accordance with Paragraph 2.4. If the Contractor does not proceed with correction of such nonconforming Work within a reasonable time fixed by written notice from the Construction Manager or from the Architect issued through the Construction Manager, the Owner or Construction Manager may remove it and store the salvable materials or equipment at the Contractor's expense. If the Contractor does not pay costs of such removal and storage within ten days after written notice, the Owner or Construction Manager may upon ten additional days' written notice sell such materials and equipment at auction or at private sale and shall account for the proceeds thereof, after deducting costs and damages that should have been borne by the Contractor, including compensation for the Construction Manager's and Architect's services and expenses made necessary thereby. If such proceeds of sale do not cover costs which the Contractor should have borne, the Contract Sum shall be reduced by the deficiency. If payments then or thereafter due the Contractor are not sufficient to cover such amount, the Contractor shall pay the difference to the Owner through the Construction Manager.

12.2.5 The Contractor shall bear the cost of correcting destroyed or damaged construction, whether completed or partially completed, of the Owner or Construction Manager or other Contractors caused by the Contractor's correction or removal of Work which is not in accordance with the requirements of the Contract Documents.

12.2.6 Nothing contained in this Paragraph 12.2 shall be construed to establish a period of limitation with respect to other obligations which the Contractor might have under the Contract Documents. Establishment of the time period of one year as described in Subparagraph 12.2.2 relates only to the specific obligation of the Contractor to correct the Work, and has no relationship to the time within which the obligation to comply with the Contract Documents may be sought to be enforced, nor to the time within which proceedings may be commenced to establish the Contractor's liability with respect to the Contractor's obligations other than specifically to correct the Work.

12.3 ACCEPTANCE OF NONCONFORMING WORK

12.3.1 If the Owner prefers to accept Work which is not in accordance with the requirements of the Contract Documents, the Owner may do so instead of requiring its removal and correction, in which case the Contract Sum will be reduced as appropriate and equitable. Such adjustment shall be effected whether or not final payment has been made.

ARTICLE 13
MISCELLANEOUS PROVISIONS

13.1 GOVERNING LAW

13.1.1 The Contract shall be governed by the law of the place where the Project is located.

13.2 SUCCESSORS AND ASSIGNS

13.2.1 The Owner and Contractor respectively bind themselves, their partners, successors, assigns and legal representatives to the other party hereto and to partners, successors, assigns and legal representatives of such other party in respect to covenants, agreements and obligations contained in the Contract Documents. Neither party to the Contract shall assign the Contract as a whole or part without written consent of the other. If either party attempts to make such an assignment without such consent, that party shall nevertheless remain legally responsible for all obligations under the Contract.

13.3 WRITTEN NOTICE

13.3.1 Written notice shall be deemed to have been duly served if delivered in person to the individual or a member of

© 1992 THE AMERICAN INSTITUTE OF ARCHITECTS, 1735 NEW YORK AVENUE, N.W., WASHINGTON, D.C., 20006-5292. AIA DOCUMENT A201/CMa - GENERAL CONDITIONS OF THE CONTRACT FOR CONSTRUCTION - CONSTRUCTION MANAGER-ADVISER EDITION - 1992 EDITION - AIA® - WARNING: Unlicensed photocopying violates U.S. copyright laws and will subject the violator to legal prosecution. This document was electronically produced with permission of the AIA and can be reproduced in accordance with your license without violation until the date of expiration as noted below. expiration as noted below. expiration as noted below. User Document: a201cma pe group final january 1, 2004.aia -- 1/13/2004. AIA License Number 1015952, which expires on 6/20/2004.

the firm or entity or to an officer of the corporation for which it was intended, or if delivered at or sent by registered or certified mail to the last business address known to the party giving notice. Owner or Construction Manager as Owner's agent, may, at their option, serve notice on the Contractor by faxing a copy of the notice to the Contractor at its last knonw facsimile number and subsequently mailing the notice to the Contractor's last known business address.

13.4 RIGHTS AND REMEDIES

13.4.1 Duties and obligations imposed by the Contract Documents and rights and remedies available thereunder shall be in addition to and not a limitation of duties, obligations, rights and remedies otherwise imposed or available by law.

13.4.2 No action or failure to act by the Owner, Construction Manager, Architect or Contractor shall constitute a waiver of a right or duty afforded them under the Contract, nor shall such action or failure to act constitute approval of or acquiescence in a breach thereunder, except as may be specifically agreed in writing.

13.5 TESTS AND INSPECTIONS

13.5.1 Tests, inspections and approvals of portions of the Work required by the Contract Documents or by laws, ordinances, rules, regulations or orders of public authorities having jurisdiction shall be made at an appropriate time. Unless otherwise provided, the Contractor shall make arrangements for such tests, inspections and approvals with an independent testing laboratory or entity acceptable to the Owner, or with the appropriate public authority, and shall bear all related costs of tests, inspections and approvals. The Contractor shall give the Construction Manager and Architect timely notice of when and where tests and inspections are to be made so the Construction Manager and Architect may observe such procedures. The Owner shall bear costs of tests, inspections or approvals which do not become requirements until after bids are received or negotiations concluded.

13.5.2 If the Construction Manager, Architect, Owner or public authorities having jurisdiction determine that portions of the Work require additional testing, inspection or approval not included under Subparagraph 13.5.1, the Construction Manager and Architect will, upon written authorization from the Owner, instruct the Contractor to make arrangements for such additional testing, inspection or approval by an entity acceptable to the Owner, and the Contractor shall give timely notice to the Construction Manager and Architect of when and where tests and inspections are to be made so the Construction Manager and Architect may observe such procedures. The Owner shall bear such costs except as provided in Subparagraph 13.5.3.

13.5.3 If such procedures for testing, inspection or approval under Subparagraphs 13.5.1 and 13.5.2 reveal failure of the portions of the Work to comply with requirements established by the Contract Documents, the Contractor shall bear all costs made necessary by such failure including those of repeated procedures and compensation for the Construction Manager's and Architect's services and expenses. The Contractor also agrees that the cost of testing services required for the convenience of the Contractor in its scheduling and performance of the Work, and the cost of testing services related to remedial operations performed to correct deficiencies in the Work, shall be borne by the Contractor.

13.5.4 Required certificates of testing, inspection or approval shall, unless otherwise required by the Contract Documents, be secured by the Contractor and promptly delivered to the Construction Manager for transmittal to the Architect.

13.5.5 If the Construction Manager or Architect is to observe tests, inspections or approvals required by the Contract Documents, the Construction Manager or Architect will do so promptly and, where practicable, at the normal place of testing.

13.5.6 Tests or inspections conducted pursuant to the Contract Documents shall be made promptly to avoid unreasonable delay in the Work.

13.6 INTEREST

13.6.1 Payments due and unpaid under the Contract Documents shall bear interest from the date payment is due at such rate as the parties may agree upon in writing or, in the absence thereof, at the legal rate prevailing from time to time at the place where the Project is located.

13.7 COMMENCEMENT OF STATUTORY LIMITATION PERIOD

13.7.1 As between the Owner and Contractor, the limitation period shall commence to run as determined by state law.~~:~~

~~.1 **Before Substantial Completion.** As to acts or failures to act occurring prior to the relevant date of Substantial Completion, any applicable statute of limitations shall commence to run and any alleged cause of action shall be deemed to have accrued in any and all events not later than such date of Substantial Completion;~~

~~.2 **Between Substantial Completion and Final Certificate for Payment.** As to acts or failures to act occurring subsequent to the relevant date of Substantial Completion and prior to issuance of the final Certificate for Payment, any applicable statute of limitations shall commence to run and any alleged cause of action shall be deemed to have accrued in any and all events not later than the date of issuance of the final Certificate for Payment; and~~

© 1992 THE AMERICAN INSTITUTE OF ARCHITECTS, 1735 NEW YORK AVENUE, N.W., WASHINGTON, D.C., 20006-5292. AIA DOCUMENT A201/CMa - GENERAL CONDITIONS OF THE CONTRACT FOR CONSTRUCTION - CONSTRUCTION MANAGER-ADVISER EDITION - 1992 EDITION - AIA® - WARNING: Unlicensed photocopying violates U.S. copyright laws and will subject the violator to legal prosecution. This document was electronically produced with permission of the AIA and can be reproduced in accordance with your license without violation until the date of expiration as noted below. expiration as noted below. expiration as noted below. User Document: a201cma pe group final january 1, 2004.aia -- 1/13/2004. AIA License Number 1015952, which expires on 6/20/2004.

~~.3 After Final Certificate for Payment. As to acts or failures to act occurring after the relevant date of issuance of the final Certificate for Payment, any applicable statute of limitations shall commence to run and any alleged cause of action shall be deemed to have accrued in any and all events not later than the date of any act or failure to act by the Contractor pursuant to any warranty provided under Paragraph 3.5, the date of any correction of the Work or failure to correct the Work by the Contractor under Paragraph 12.2, or the date of actual commission of any other act or failure to perform any duty or obligation by the Contractor or Owner, whichever occurs last.~~

ARTICLE 14
TERMINATION OR SUSPENSION OF THE CONTRACT

14.1 TERMINATION BY THE CONTRACTOR

14.1.1 The Contractor may terminate the Contract if the Work is stopped for a period of 30 days through no act or fault of the Contractor or a Subcontractor, Sub-subcontractor or their agents or employees or any other persons performing portions of the Work under contract with the Contractor, for any of the following reasons:

.1 issuance of an order of a court or other public authority having jurisdiction;

.2 an act of government, such as a declaration of national emergency, making material unavailable;

~~.3 because the Construction Manager or Architect has not issued a Certificate for Payment and has not notified the Contractor of the reason for withholding certification as provided in Subparagraph 9.4.2, or because the Owner has not made payment on a Certificate for Payment within the time stated in the Contract Documents;~~

~~.4 if repeated suspensions, delays or interruptions by the Owner as described in Paragraph 14.3 constitute in the aggregate more than 100 percent of the total number of days scheduled for completion, or 120 days in any 365 day period, whichever is less; or~~

~~.5 the Owner has failed to furnish to the Contractor promptly, upon the Contractor's request, reasonable evidence as required by Subparagraph 2.2.1.~~

14.1.2 If one of the above reasons exists, the Contractor may, upon seven additional days' written notice to the Owner, Construction Manager and Architect, terminate the Contract and recover from the Owner payment for Work executed and for proven loss with respect to materials, equipment, tools, and construction equipment and machinery, including reasonable overhead, profit and damages.

14.1.3 If the Work is stopped for a period of 60 days or if repeated suspensions, delays, or interruptions by the Owner as described in Paragraph 14.3 constitute in the aggregate the lesser of an amount equal to the Contract time or 120 days in any one (1) year period through no act or fault of the Contractor or a Subcontractor or their agents or employees or any other persons performing portions of the Work under contract with the Contractor because the Owner has persistently failed to fulfill the Owner's obligations under the Contract Documents with respect to matters important to the progress of the Work, the Contractor may, upon seven additional days' written notice to the Owner, Construction Manager and Architect, terminate the Contract and recover from the Owner as provided in Subparagraph 14.1.2.

14.2 TERMINATION BY THE OWNER FOR CAUSE

14.2.1 The Owner may terminate the Contract if the Contractor:

.1 persistently or repeatedly refuses or fails to supply enough properly skilled workers or proper materials;

.2 fails to make payment to Subcontractors for materials or labor in accordance with the respective agreements between the Contractor and the Subcontractors;

.3 persistently disregards laws, ordinances, or rules, regulations or orders of a public authority having jurisdiction; or

.4 otherwise is guilty of substantial breach of a provision of the Contract Documents.

.5 is petitioned bankrupt, or makes a general assignment for the benefit of creditors, or if a receiver is appointed on account of the Contractor's insolvency.

.6 breaches any warranty made by the Contractor under or pursuant to the Contract Documents.

.7 fails to furnish the Owner with assurances satisfactory to the Owner evidencing the Contractor's ability to complete the Work in compliance with all the requirements of the Contract Documents.

.8 fails after commencement of the Work to proceed continuously with the construction and completion of the Work for more than ten (10) days, except as permitted under the Contract Documents.

14.2.2 When any of the above reasons exist, the Owner, after consultation with the Construction Manager, and upon

© 1992 THE AMERICAN INSTITUTE OF ARCHITECTS, 1735 NEW YORK AVENUE, N.W., WASHINGTON, D.C., 20006-5292. AIA DOCUMENT A201/CMa - GENERAL CONDITIONS OF THE CONTRACT FOR CONSTRUCTION - CONSTRUCTION MANAGER-ADVISER EDITION - 1992 EDITION - AIA® - WARNING: Unlicensed photocopying violates U.S. copyright laws and will subject the violator to legal prosecution. This document was electronically produced with permission of the AIA and can be reproduced in accordance with your license without violation until the date of expiration as noted below. expiration as noted below. expiration as noted below. User Document: a201cma pe group final january 1, 2004.aia -- 1/13/2004. AIA License Number 1015952, which expires on 6/20/2004.

certification by the Architect that sufficient cause exists to justify such action, may without prejudice to any other rights or remedies of the Owner and after giving the Contractor and the Contractor's surety, if any, ~~seven days'~~ seventy-two hours written notice, terminate employment of the Contractor and may, subject to any prior rights of the surety:

.1 take possession of the site and of all materials, equipment, tools, and construction equipment and machinery thereon owned by the Contractor;

.2 accept assignment of subcontracts pursuant to Paragraph 5.4; and

.3 finish the Work by whatever reasonable method the Owner may deem expedient.

14.2.3 When the Owner terminates the Contract for one of the reasons stated in Subparagraph 14.2.1, the Contractor shall not be entitled to receive further payment until the Work is finished.

14.2.4 If the unpaid balance of the Contract Sum exceeds costs of finishing the Work, including compensation for the Construction Manager's and Architect's services and expenses made necessary thereby, such excess shall be paid to the Contractor. If such costs exceed the unpaid balance, the Contractor shall pay the difference to the Owner through the Construction Manager. The amount to be paid to the Contractor or Owner, as the case may be, shall, upon application, be certified by the Architect after consultation with the Construction Manager, and this obligation for payment shall survive termination of the Contract.

14.3 SUSPENSION BY THE OWNER FOR CONVENIENCE

14.3.1 The Owner may, without cause, order the Contractor in writing to suspend, delay or interrupt the Work in whole or in part for such period of time as the Owner may determine.

14.3.2 An adjustment shall be made for increases in the cost of performance of the Contract, including profit on the increased cost of performance, caused by suspension, delay or interruption. No adjustment shall be made to the extent:

.1 that performance is, was or would have been so suspended, delayed or interrupted by another cause for which the Contractor is responsible; or

.2 that an equitable adjustment is made or denied under another provision of this Contract.

14.3.3 Adjustments made in the cost of performance may have a mutually agreed fixed or percentage fee.

14.4 Owner's Termination for Convenience

14.4.1 The Owner reserves the right to terminate the Contract, or any portion thereof, for convenience and without cause, even though the Contractor has not failed to perform any part of the Contract. Termination of the Work hereunder shall be effected by written notice to the Contractor. Upon receipt of such notice, the Contractor shall, unless the notice otherwise directs:

.1 Immediately discontinue the terminated portion of the Work and the placing of all orders and subcontracts in connection with the terminated portion of the Work;

.2 Immediately cancel all of the existing orders and subcontracts in connection with the terminated portion of the Work;

.3 Immediately transfer to the Owner all materials, supplies, Work in progress, appliances, facilities, machinery, and tools acquired by the Contractor in connection with the performance of the terminated portion of the Work, and take such action as may be necessary or as the Owner or Construction Manager may direct for protection and preservation of the work relating to this Contract; and

.4 deliver all plans, drawings, specifications, and other necessary information to the Owner through the Construction Manager.

14.4.2 If the Owner terminates the Contract for convenience, the following shall be the Contractor's exclusive remedies:

14.4.2.1 Reimbursement of all actual expenditures and costs approved by the Owner through the Construction Manager and Architect as having been made or incurred in performing the terminated Work;

14.4.2.2 Reimbursement of expenditures made and costs incurred with the Owner's prior written approval in settling or discharging outstanding commitments entered into by the Contractor in performing the Contract; and

14.4.2.3 Payment of profit, insofar as profit is realized hereunder, of an amount equal to the estimated profit on the entire Contract at the time of termination multiplied by the percentage of completion of the Work. In no event shall the Contractor be entitled to anticipated fees or profits on work not required to be performed.

14.4.3 All obligations of the Contactor under the Contract with respect to completed Work, including but

© 1992 THE AMERICAN INSTITUTE OF ARCHITECTS, 1735 NEW YORK AVENUE, N.W., WASHINGTON, D.C., 20006-5292. AIA DOCUMENT A201/CMa - GENERAL CONDITIONS OF THE CONTRACT FOR CONSTRUCTION - CONSTRUCTION MANAGER-ADVISER EDITION - 1992 EDITION - AIA® - WARNING: Unlicensed photocopying violates U.S. copyright laws and will subject the violator to legal prosecution. This document was electronically produced with permission of the AIA and can be reproduced in accordance with your license without violation until the date of expiration as noted below. expiration as noted below. expiration as noted below. User Document: a201cma pe group final january 1, 2004.aia -- 1/13/2004. AIA License Number 1015952, which expires on 6/20/2004.

not limited to all warranties, guarantees, indemnities, insurance and bonds shall apply to all Work completed or substantially completed by the Contractor prior to a convenience termination by the Owner. Notwithstanding the above, any convenience termination by the Owner or payments to the Contractor shall be without prejudice to any claims or legal remedies that the Owner may have against the Contractor for any cause.

14.4.4 Upon a determination that a termination of this Contract, other than a termination for convenience under this Paragraph 14.4, was wrongful or improper for any reason, such termination shall automatically be deemed converted to a convenience termination under this Paragraph 14.4, and the Contractor's remedy for such wrongful termination shall be limited to the recoveries specified under Subparagraph 14.4.2.

14.4.5 Contractor is required to include a termination for convenience clause in all of its subcontractor and supplier contracts, in substantially similar form as set forth in this Paragraph 14.4, and that limits the subcontractors and suppliers to exclusive remedies no greater than those set forth in Subparagraph 14.4.2 that are available to Contractor. Contractor shall bear all costs arising or related to its failure to include such clause in its subcontracts.

© 1992 THE AMERICAN INSTITUTE OF ARCHITECTS, 1735 NEW YORK AVENUE, N.W., WASHINGTON, D.C., 20006-5292. AIA DOCUMENT A201/CMa - GENERAL CONDITIONS OF THE CONTRACT FOR CONSTRUCTION - CONSTRUCTION MANAGER-ADVISER EDITION - 1992 EDITION - AIA® - WARNING: Unlicensed photocopying violates U.S. copyright laws and will subject the violator to legal prosecution. This document was electronically produced with permission of the AIA and can be reproduced in accordance with your license without violation until the date of expiration as noted below. expiration as noted below. expiration as noted below. User Document: a201cma pe group final january 1, 2004.aia -- 1/13/2004. AIA License Number 1015952, which expires on 6/20/2004.

SECTION 00800
SUPPLEMENTARY GENERAL CONDITIONS

PART 1 - GENERAL

1.01 RELATED DOCUMENTS

A. Attention is directed to Bidding and Contract Requirements, and to Division 1, General Requirements, which are hereby made a part of this Section.

B. Specific attention is directed to the requirements described in Section 00700 General Conditions of the Contract and Section 00500 Agreement Form.

1.02 SUPPLEMENTARY GENERAL CONDITIONS

A. Document **PCP 14-11, Supplementary Conditions to AIA 201/CMa 1992 When Project is not Subject to Mandatory Arbitration, is** bound within this Project Manual and is a part of the Contract Documents.

B. Document **PCP 14-12, Supplementary Conditions to AIA 201/CMa 1992 When Owner does not Mutually Waive Subrogation, is** bound within this Project Manual and is a part of the Contract Documents.

These documents are attached immediately following this page.

END OF SECTION 00800

Supplementary Conditions to
AIA A201 CMa – 1992
When Project is not Subject to Mandatory Arbitration

Subparagraph 4.5 – Replace "arbitration" with "litigation".

Subparagraph 4.7.2 – Delete "arbitration or" in the 2nd and 3rd sentences respectively.

Subparagraph 4.7.4 – Replace "arbitration" with "litigation".

Subparagraph 4.8.4 – Replace "arbitration" with "litigation".

Subparagraph 4.9.1 – Delete this Subparagraph and replace with "Any controversy or Claim arising out of or related to the Contract, or the breach thereof and not resolved under Paragraph 4.8 shall be subject to litigation in a court of competent jurisdiction."

Subparagraph 4.9.2 – Delete this Subparagraph.

Subparagraph 4.9.3 – Delete this Subparagraph and replace it with "During litigation or other dispute resolution proceedings, the Owner and Contractor shall comply with Subparagraph 4.7.4."

Subparagraph 4.9.4 – Delete this Subparagraph and replace it with "When a written decision of the Architect states that (1) the decision is final but subject to litigation then (2) a suit must be filed within 30 days after the date on which the party filing the suit receives the final written decision (unless a longer period of time is agreed upon, in writing, by the other party). Failure to file a suit within said 30 days' period shall result in the Architect's decision becoming final and binding upon the Owner and Contractor. If the Architect renders a decision after litigation has been initiated, such decision may be entered as evidence, but shall not supersede litigation proceedings unless the decision is acceptable to all parties concerned."

Subparagraph 4.9.4.1 – Delete this Subparagraph.

Subparagraph 4.9.4.2 – Delete this Subparagraph.

Subparagraph 4.9.5 – Delete this Subparagraph.

Subparagraph 4.9.6 – Delete this Subparagraph.

Subparagraph 4.9.7 – Delete this Subparagraph.

Subparagraph 8.3.1 – Replace "arbitration" with "dispute resolution".

Subparagraph 9.7.1 – In the first sentence, replace "arbitration" with "litigation".

Subparagraph 10.1.2 – Replace both occurrences of "arbitration" with "litigation".

Subparagraph 11.3.9 – Replace "or in accordance with an arbitration award, in which case the procedure shall be as provided in Paragraph 4.9" with "or in accordance with a court judgment or order."

Subparagraph 11.3.10 – In the first sentence delete ", if such objection be made, arbitrators shall be chosen as provided in Paragraph 4.9." Delete the 2nd and 3rd sentences in their entirety.

Supplementary Conditions to
AIA A201 CMa – 1992
When Owner does not Mutually Waive Subrogation

Subparagraph 11.3.7 – Replace entire Subparagraph with the following: "The Contractor waives all rights against the Owner and against the Construction Manager, Architect, Owner's other Contractors and own forces described in Article 6, if any, and the subcontractors, sub-subcontractors, consultants, agents and employees of any of them, for damages caused by fire or other perils to the extent covered by property insurance obtained pursuant to this Paragraph 11.3 or other property insurance applicable to the Work, except such rights as the Contractor may have to the proceeds of such insurance. The Contractor shall require the subcontractors, sub-subcontractors, agents and employees of any of them, by appropriate agreements written where legally required for validity, similar waivers each in favor of the Owner, the Construction Manager and the Architect. The policies shall provide for such waivers by endorsement or otherwise."

SECTION 00810
ON-SITE PROJECT SAFETY AND LOSS CONTROL PROGRAM

PART 1 - GENERAL

1.01 RELATED DOCUMENTS

A. Attention is directed to Bidding and Contract Requirements, and to Division 1, General Requirements, which are hereby made a part of this Section.

1.02 **CONTRACTOR'S** SAFETY REQUIREMENTS

A. Generally

1. **Contractor** is responsible for its own Safety Program for Work on this Project that is at least as stringent as the requirements set forth in this section of the Project Manual.

2. **Contractor** shall provide a safe workplace and shall otherwise take all precautions for the safety of Subordinate Parties and persons and property in or near the premises where Work is being performed.

3. **Contractor** shall comply with all applicable federal, state and local laws, rules and regulations, including, but not limited to, applicable provisions of the Occupational Safety and Health Act ("OSHA") and/or the governing state law.

4. **Contractor** shall comply with all requirements stated in the Site Specific Safety Instructions (SSSI) form or elsewhere in the Contract Documents.

5. **Contractor** shall ensure that its employees understand and comply with applicable safety and health programs, rules, and regulations.

6. **Contractor** will assign an individual to act as Safety Representative who will have the responsibility of resolving safety matters, and act as a liaison among **Contractor**, Barton Malow Company and the Owner. The Safety Representative must be a person who is capable of identifying existing and predictable hazards in surroundings that are unsanitary, hazardous or dangerous to employees, and has the authority to take prompt corrective measures to eliminate them. The Safety Representative must meet the standards for a Competent Person under applicable law when required (scaffolding, confined spaces, etc.). The Safety Representative must be on site full time. The Safety Representative or an alternate must attend periodic safety meetings as directed by Barton Malow Company.

7. **Contractor** shall ensure that its site supervisors and/or Safety Representative attend a pre-construction meeting where planning for safe execution of the project will be addressed.

8. **Contractor** is fully responsible for all Hazardous Materials it creates or releases in connection with, or brings to, the Project. **Contractor** shall immediately report to Barton Malow Company any Hazardous Materials that it discovers or which are released at the Project.

9. Minimum training for on-site employees shall include basic safety orientation, task-specific safety instruction, weekly Tool Box Talks, and other periodic safety meetings. **Contractor** shall document all such training.

10. **Contractor** shall self-inspect its areas of control to assure compliance with the safety requirements.

11. All on-site employees of either **Contractor** or its Subordinate Parties are required to report any unsafe act or condition and any work-related injuries or illness immediately to a supervisor. If the act or condition can be safely and easily corrected, the employee or supervisor should make the correction.

12. **Contractor** shall notify Barton Malow Company immediately of all injuries requiring clinical attention and all property damage potentially in excess of $1,000.

13. **Contractor** shall have emergency procedures to deal with the immediate removal and treatment, if necessary, of any employee who may be injured or become ill. **Contractor** shall keep on the Project site a first-aid kit supplied according to current regulations, and shall have on-site a person trained to administer first aid.

14. **Contractor** shall inform Barton Malow Company of the arrival of any federal or state inspector or compliance officer prior to touring the site. Any reports, citations, or other documents related to the inspection shall be provided promptly to Barton Malow.

15. **Contractor** shall have a written Substance Abuse Policy. The use or possession of illegal drugs or the use of alcohol while performing Work on the Project are strictly prohibited and may lead to immediate removal from the Project.

16. **Contractor** shall be responsible for payment of all safety-related citations, fines and/or claims arising out of or relating to its Work levied against the Owner, Architect, Barton Malow Company, or their employees or affiliates.

17. Barton Malow has the right to require that **Contractor** submit monthly its hours worked and incident rates for the Project.

B. Additional Barton Malow Requirements

1. Work crews shall conduct a Job Hazard Analysis (JHA) discussion to plan for safe performance before beginning any work task. **Contractor** is encouraged to prepare a written record of each JHA.

2. All workers, management, and visitors shall wear approved hard hats while on site, outside the trailers. Cowboy-style hard hats are prohibited. Hardhats must not be removed to use welding shields. Welding shields must attach to hardhats or be hand held.

3. Sleeved shirts (minimum of four inches), long pants, and durable work boots are required minimum clothing.

4. Personal cell phones are not to be used on construction sites except to report an emergency or on approved break time. Use of business cell phones must not interfere with jobsite safety.

5. Personal radios or music players with earphones are not permitted.

6. **All persons working at elevations of six feet or greater must have 100% continuous fall protection. Engineering controls are preferred, but personal fall arrest systems are also permissible. An exception is permitted for safe use of ladders up to 24 feet long.**

7. **Contractor** is responsible to repair or restore any barricade that it modifies or removes.

8. Class III (household) stepladders are prohibited; metal ladders are strongly discouraged.

9. All scaffolds must be checked daily and before each use for safety compliance. Scaffolds shall never be left in an unsafe condition and must be removed/disabled immediately if not to be used again.

10. All persons operating cranes must be certified as crane operators by the National Commission on the Certification of Crane Operators (NCCCO). Daily crane inspection reports must be prepared by the operator and kept with the crane, available for inspection.

11. Riding the headache ball is prohibited.

12. All dozers, loaders, tractors and end loader backhoes must have functioning backup alarms.

13. Keep equipment at least 15 feet from energized power lines.

14. Electrical, pneumatic, and other energy systems that could be accidentally energized or started up while work is in process must be locked out (not merely tagged out).

15. Only fire retardant materials may be used to build shanties or other temporary enclosures inside of buildings finished or under construction. Shanties shall be continually policed by their occupants to prevent the accumulation of waste or other combustibles.

16. Engineering controls must be used to restrain silica dust per applicable law.

1.03 **CONTRACTOR'S** SAFETY SUBMITTALS

A. **Contractor** shall provide copies of the following written safety submittals to Barton Malow Company at the times indicated:

Submittal	**Timing**
Contractor Safety Certificate, Barton Malow form SAF 6.3.3.3	Before on-site work begins
Site-specific Safety Program, including substance abuse policy, hazard communication program, and Material Safety Data Sheets (MSDS)	Before on-site work begins
Tool Box Talk Reports	Weekly
Incident Reports (OSHA form 301or equivalent)	Within 24 hours of incident
Hours worked and incident rates	Monthly (if applicable)

B. Barton Malow's receipt of the Safety Program or other submittals from **Contractor** does not constitute approval of the Program or submittal or permission to deviate from the requirements of the Contract Documents and applicable law.

C. **Contractor** will allow inspection of, and Barton Malow Company may request copies of, any and all safety-related documents and records in its possession relating to the Project.

1.04 BARTON MALOW COMPANY RIGHTS

A. **Safety Hazard Notifications** may be issued to the **Contractor** when an unsafe act or condition is reported or observed. Barton Malow Company shall not be required to supervise the abatement or associated reprimand of unsafe acts or conditions within a **Contractor's** scope of work as this is solely the responsibility of **Contractor**. Nevertheless, Barton Malow Company has the right, but not the obligation, to require **Contractor** to cease or abate any unsafe practice or activity it notices, at **Contractor's** sole expense.

B. **Contractor's** failure to comply with the contract safety requirements will be considered a default of the Agreement, and may result in remedial action including, but not limited to, withholding of payment of any sums due or termination.

C. Barton Malow Company's failure to require the submission of any form, documentation, or any other act required under this Section, 00810, of the Project Manual shall not relieve the **Contractor** from any of its safety obligations.

D. Nothing in this Section or in this Agreement makes Barton Malow Company responsible or liable for protecting **Contractor's** employees and other Subordinate Parties or assuring or providing for their safety or preventing accidents or property damage.

E. All requirements referenced in this Section 00810 are binding on **Contractor** and all of its Subordinate Parties, even where such requirements may exceed the standards of applicable law.

1.05 SAFETY RELATED FORMS

A. The following safety related forms are in Section 01600 Forms:

Trade Contractor Safety Certificate, Barton Malow Form SAF 6.3.3.3/CON 7.9

END OF SECTION 00810

SITE-SPECIFIC SAFETY INFORMATION (SSSI) FORM

ZERO TOLERANCE FOR UNSAFE ACTS OR CONDITIONS

PROJECT IDENTIFICATION

Owner Name:	Troy School District	Project Name :	Phase I - Three Middle Schools
Jobsite Location:	Boulan Park Middle School	BMC Project No.:	041049 - BP #9361
Jobsite Phone (voice):	248.823.4631	Jobsite Fax:	248.823.4672

PROJECT OPERATIONAL LEADERSHIP

Title	Name	Office Phone #	Cell Phone #	24 hour contact #
Project Director	Beth Yorke	248.213.1822	248.755.2702	SAME
Project Manager	Leah Bossert	248.823.4631	248.640.5272	SAME
Project Engineer	Kelly Stahley	248.823.4677	248.343.4871	SAME
Superintendent	TBD	248.823.4631		SAME
Safety Representative	Gary Jordan	248.436.5406	248.219.3693	SAME
Owner's Representative	Michael Adamczyk	248.823.4022		

EMERGENCY RESPONSE INFORMATION

Key Phone Numbers		**Utilities**	
Emergency Response (medical/fire):	911	Gas Company:	Consumer Power/800.477.50
Police Dept. (non-emergency):	248.524.3477	Electric Company:	dte/800.477.4747
Fire Dept. (non-emergency):	248.524.3419	Water Company:	
Security Service:			

Injury Response				**Evacuation/Rescue**
Certified First Aid Provider at Jobsite:				Location of rescue equipment:
Name:	TBD	Cell		Defibrillator - Main Office & Small Storage Rm by Gym
Location of First Aid Equipment				Gathering point after evacuation:
Each Contractor have in job box, Supt. have in office onsite				Eastside of Building, 100 ft. away from building
Nearest Hospital:	Troy Beaumont			Severe weather shelter:
Directions to Hospital:				Classrooms with no windows
Long Lake Rd. East to Dequindre, North on Dequindre to				**Emergency Signals**
hospital, Westside of Road; if past M-59 you went to far				Evacuation (fire, bomb, etc): Short blasts of air horn
Hospital phone number:	248.964.5111			- Proceed to gathering point for roll call
Recommended Clinic:	Troy Medical PC 2649 Crooks Rd. (2 blks S. 16)			- Never leave without notifying your company
Directions to Clinic:				Seek Shelter (weather): Long continuous blast of air horn
East on Wattles, South on Crooks				- Proceed to shelter for roll call
Clinic phone number:	248.643.0044			- Never leave without notifying your company
Clinic hours:	Mon-Thurs 8:00 -5:00, Fri 4:30, Sat 8-12			
BMC Safety Department:	248-436-5400			All Clear:
				- Barton Malow notifies contractors by cell phone or radio

SITE-SPECIFIC SAFETY INFORMATION (SSSI) FORM

ZERO TOLERANCE FOR UNSAFE ACTS OR CONDITIONS

PROJECT IDENTIFICATION

Owner Name:	Troy School District	Project Name :	Phase I - Three Middle Schools
Jobsite Location:	Larson & Smith Middle School	BMC Project No.:	041049 - BP #9361
Jobsite Phone (voice):	248.823.4631	Jobsite Fax:	248.823.4672

PROJECT OPERATIONAL LEADERSHIP

Title	Name	Office Phone #	Cell Phone #	24 hour contact #
Project Director	Beth Yorke	248.213.1822	248.755.2702	SAME
Project Manager	Leah Bossert	248.823.4631	248.640.5272	SAME
Project Engineer	Kelly Stahley	248.823.4677	248.343.4871	SAME
Superintendent	TBD	248.823.4631		SAME
Safety Representative	Gary Jordan	248.436.5406	248.219.3693	SAME
Owner's Representative	Michael Adamczyk	248.823.4022		

EMERGENCY RESPONSE INFORMATION

Key Phone Numbers		**Utilities**	
Emergency Response (medical/fire):	911	Gas Company:	Consumer Power/800.477.50
Police Dept. (non-emergency):	248.524.3477	Electric Company:	dte/800.477.4747
Fire Dept. (non-emergency):	248.524.3419	Water Company:	
Security Service:			

Injury Response				**Evacuation/Rescue**
Certified First Aid Provider at Jobsite:				Location of rescue equipment:
Name:	TBD	Cell		Defibrillator - Two in Main Office Main Office
Location of First Aid Equipment				Gathering point after evacuation:
Each Contractor have in job box, Supt. have in office onsite				100 ft. away from building
Nearest Hospital:	Troy Beaumont			Severe weather shelter:
Directions to Hospital:				Classrooms with no windows
Long Lake Rd. East to Dequindre, North on Dequindre to				**Emergency Signals**
hospital, Westside of Road; if past M-59 you went to far				Evacuation (fire, bomb, etc): Short blasts of air horn
Hospital phone number:	248.964.5111			- Proceed to gathering point for roll call
Recommended Clinic:	Troy Medical PC 2649 Crooks Rd. (2 blks S. 16)			- Never leave without notifying your company
Directions to Clinic:				Seek Shelter (weather): Long continuous blast of air horn
East on Wattles, South on Crooks				- Proceed to shelter for roll call
Clinic phone number:	248.643.0044			- Never leave without notifying your company
Clinic hours:	Mon-Thurs 8:00 -5:00, Fri 4:30, Sat 8-12			
BMC Safety Department:	248-436-5400			All Clear:
				- Barton Malow notifies contractors by cell phone or radio

OTHER SITE-SPECIFIC SAFETY INFORMATION

(If not applicable or no additional information beyond Contract Documents, leave item blank.)

1) General Safety Requirements. Each Contractor on the jobsite is required to observe all applicable laws and contractual duties, including Section 00810 of the Project Manual and any procedures or other requirements set forth in this SSSI form or its Exhibits. Nothing stated in or omitted from this SSSI form excuses compliance with requirements stated elsewhere in the Contract Documents. The failure to identify a safety condition in this document does not represent or warrant that no such condition is present.

2) Postings. Notices required by federal or state law regarding safety, employment, and other matters will be posted on a bulletin board at the following jobsite location: 1301 Boyd, Troy, MI 48083

3) MSDS forms. Material Safety Data Sheet (MSDS) information for all Contractors will be maintained at the following jobsite location: 1301 Boyd, Troy, MI 48083

4) Owner Requirements. Special Owner safety requirements for this project are:
   a) ☐ Attached as Exhibit SSSI-4; or
   b) ☐ Stated here:

5) Insurance. Is this project covered by a Controlled Insurance Program (CIP)?
   a) ☒ Yes, an Owner Controlled Insurance Program (OCIP)
   b) ☐ Yes, a Contractor Controlled Insurance Program (CCIP)
   c) ☐ No CIP
   d) CIP procedures or other special insurance procedures are:
      i) ☐ Attached as Exhibit SSSI-5; or
      ii) ☐ Stated here:

6) Employees. Information on employee requirements specific to this jobsite (jobsite safety orientation, identification badges, drug testing, etc.) is:
      i) ☐ Attached as Exhibit SSSI-6; or
      ii) ☒ Stated here: A Site Specific Safety Program, and Substance Abuse Policy

7) Planning. Information on special requirements for safety planning (e.g., written job hazard analysis or pre-task planning) is:
   a) ☐ Attached as Exhibit SSSI-7; or
   b) ☒ Stated here: A Site Specific Safety Program, and Substance Abuse Policy

8) Jobsite Access. Information relating to site access (parking, pedestrians, deliveries, heavy equipment, traffic control, emergency vehicle access, etc.) is:
   a) ☐ Attached as Exhibit SSSI-8; or
   b) ☒ Stated here: Keyed Gates and See Project Superintendent

9) Jobsite Security. Information relating to jobsite security procedures (security services, visitor policy, etc.) is:
   a) ☐ Attached as Exhibit SSSI-9; or
   b) ☒ Stated here: ONLY Trades people working on-site with badges issued by Troy School District

10) Staging and Laydown. Information on staging and laydown areas at the jobsite is:
   a) ☐ Attached as Exhibit SSSI-10; or
   b) ☒ Stated here: Specified on drawings and under the direction of the Project Superintendent

11) Cranes. Special requirements associated with crane access or placement at the jobsite are:
   a) ☐ Attached as Exhibit SSSI-11; or
   b) ☒ Stated here: Designated crane staging area, coordinated by BMC and Structural Steel Trade (Intrepid)

12) Environmental Hazards. Information on hazards and procedures associated with environmental conditions at the jobsite (including known or suspected hazardous materials, toxic chemicals, pollutants, etc.) is:
   a) ☐ Attached as Exhibit SSSI-12; or
   b) ☒ Stated here: DEQ approved document on file, no environmental hazards on jobsite

13) Utilities. Information on hazards and procedures associated with underground or overhead utilities at the jobsite is:
   a) ☐ Attached as Exhibit SSSI-13; or
   b) ☒ Stated here: MIS DIG is contacted

14) Risks to or from Property. Information on structures, animals, plants, habitats, artifacts, or other property, on or near the jobsite, which either present a hazard or must be protected from damage, is:
   a) ☐ Attached as Exhibit SSSI-14; or
   b) ☒ Stated here: Fenced secured, removed and replaced or returned at end of job

15) Sitework. Information on management of stormwater or sediment runoff at this jobsite is:
   a) ☐ Attached as Exhibit SSSI-15; or
   b) ☒ Stated here: Soil Erosion control has been assigned to sitework contractor, See Project Manual Section 02200

16) Underground. Information on known or suspected unusual conditions in the soil or underground at this jobsite is:
   a) ☐ Attached as Exhibit SSSI-16; or
   b) ☒ Stated here: N/A

17) Interim Life Safety. Information on how interim life safety measures will be handled during construction is:
   a) ☐ Attached as Exhibit SSSI-17; or
   b) ☒ Stated here: BMC & Tradesman have First Aid Certified personnel on-site

18) Fire Protection. Information on fire hazards and procedures specific to this jobsite is
   a) ☐ Attached as Exhibit SSSI-18; or
   b) ☒ Stated here: Fire Extinguishers within construction area

19) Confined Spaces. Information on confined spaces at the jobsite and procedures for safe entry is:
   a) ☐ Attached as Exhibit SSSI-19; or
   b) ☒ Stated here: Specified contractors trained on-site

20) Energy Lockout/Tagout. Information on hazards from energized systems (electrical, machinery, high pressure piping, etc.) and lockout/tagout procedures is:
   a) ☐ Attached as Exhibit SSSI-20; or
   b) ☒ Stated here: Systems tagged and locked with proper written information completed if required

21) Infection Control. Information on special procedures for infection control is:
   a) ☐ Attached as Exhibit SSSI-21; or
   b) ☒ Stated here: N/A

22) Hazardous Operations. Information on unusual or hazardous construction methods or other dangerous operations at or near the jobsite (demolition, blasting, etc.) is:
   a) ☐ Attached as Exhibit SSSI-22; or
   b) ☒ Stated here: N/A

23) Other. Other information on hazards or safety-related procedures or requirements for the jobsite is:
   a) ☐ Attached as Exhibit SSSI-23; or
   b) ☒ Stated here: Project Manual, Section 00810, On-Site Project Safety & Loss Control Program and 00840, Hazardous Materials

SECTION 00840
HAZARDOUS MATERIALS

PART 1 - GENERAL

1.01 RELATED DOCUMENTS

A. Attention is directed to Bidding and Contract Requirements, and to Division 1, General Requirements, which are hereby made a part of this Section.

1.02 SUMMARY

A. This Section describes the following requirements including:
   1. Definition of Hazardous Materials
   2. Awareness of Hazardous Materials

PART 2 - HAZARDOUS MATERIALS

2.01 DEFINITION OF HAZARDOUS MATERIALS

A. A "Hazardous Material", as used in this Project Manual means asbestos; asbestos containing material; lead (including lead-based paint); PCB; molds; any other chemical, material, or substance subject to regulation as a hazardous material, hazardous substance, toxic substance, or otherwise, under applicable federal, state, or local law; and any other chemical, material, or substance that may have adverse effects on human health or the environment.

2.02 AWARENESS OF HAZARDOUS MATERIALS

A. Each Contractor shall be constantly aware of the possible discovery of Hazardous Materials. Should Contractor encounter any Hazardous Material or suspected Hazardous Material, the Contractor shall immediately stop Work in the area affected and report the condition to Barton Malow Company.

B. If the Contractor encounters any Hazardous Material or suspected Hazardous Material, the Contractor agrees to immediately initiate the required procedures of the Environmental Protection Agency (EPA), and/or state or local agencies having jurisdiction to protect any and all persons exposed to the affected areas or adjacent areas affected thereby.

C. Contractor is fully responsible for all Hazardous Materials it creates or releases in connection with, or brings to, the Project.

D. See the General and Supplementary Conditions of the Agreement for further instructions and obligations related to Hazardous Materials.

E. Each Contractor shall be responsible to bind ALL of its personnel and its Subordinate Parties to the provisions in these paragraphs and to instruct each employee of the of its duty to report any and all suspected Hazardous Materials and to comply with all applicable laws.

F. ABSOLUTELY NO MATERIAL SHALL BE BROUGHT ON OR TO THE PROJECT SITE THAT DOES NOT HAVE A MANUFACTURER'S LABEL STATING CONTENTS.

G. The Contractor shall comply with all applicable federal and state laws, rules, ordinances and regulations regarding transportation, storage, spills, releases and disposal of Hazardous Materials.

H. No asbestos or asbestos-containing material will be brought to the jobsite or incorporated into the Work by Contractor or its Subordinate Parties.

END OF SECTION 00840

SECTION 00870
LABOR RELATIONS

PART 1 - GENERAL

1.01 RELATED DOCUMENTS

A. Attention is directed to Bidding and Contract Requirements, and to Division 1, General Requirements, which are hereby made a part of this Section.

PART 2 SCOPE

2.01 PREVAILING WAGES

A. In any Agreement entered into pursuant to this **advertisement**, the **Contractor** shall comply with the provisions of the PREVAILING WAGE LAW.

The **Contractor** will pay the latest prevailing wages and fringe benefits for all Work as required **by State of Michigan/Public Act 166 dated 1965 as amended. The prevailing wage and fringe benefit rates are included immediately behind this Section. NOTE: IN MICHIGAN, THE OWNER PROVIDES THE CURRENT PREVAILING WAGE (90 DAY DOCUMENT).**

B. Additionally, **Contractor** is required to comply with all other provisions of the governing prevailing wage law, and shall ensure its Subordinate Parties' compliance therewith.

C. Each **Contractor** may be required to submit certified weekly payrolls to Barton Malow Company at no charge on a monthly basis, and may be required to obtain certified weekly payrolls from its Subordinate Parties that are subject to the governing prevailing wage law.

D. **Contractor** shall furnish any and all information that may be requested by Barton Malow Company or Owner, to include in its certified payroll, and shall submit to an independent audit (if requested) of all its books and records for the purpose of verifying that it is complying with all applicable prevailing wage statutes and ordinances. If the Department of Consumer and Industry Services determines that **Contractor** is in violation of the Act, that will constitute a material breach of contract, which shall entitle **Owner/Barton Malow Company** to exercise any or all of the rights and remedies set forth in the Contract Documents or under applicable law. The **Contractor** shall ensure that this provision is also included in all of its contracts with its Subordinate Parties that are subject to the prevailing wage law.

E. The **Contractor** shall be financially responsible for the payment of prevailing wages by all Subordinate Parties that are subject to the prevailing wage law for Work on the Project.

F. If there is a dispute between any **Contractor** and the unions, the **Contractor** will be required to meet with Barton Malow Company and the Union involved to try and resolve the issue.

G. Because Work on this Project is covered by the Michigan Prevailing Wage Act ("Act"), the **Contractor** and its subcontractors and other Subordinate Parties that are governed by the prevailing wage law shall pay all hours at the prevailing wage rates at the applicable hourly rate; no Work performed by or on behalf of the **Contractor** on this Project will be paid on a lump sum basis or a piece rate basis in violation of the Act.

H. The **Contractor** will pay its workers at wage and fringe benefit rates consistent with the Act regardless of whether the workers are classified as employees or independent contractors.

I. The **Contractor** shall not misclassify any work assignments, but shall in each and every case follow proper jurisdictional assignments in compliance with the Act.

J. The **Contractor** shall assure that any persons paid at apprentice rates under the Act are properly classified as apprentices by actual participation in a BAT certified program or as may otherwise be permitted by the Act.

END OF SECTION 00870

State of Michigan
Department of Labor and Economic Growth

Wage and Hour Division
7150 Harris Drive
PO Box 30476
Lansing, MI 48909-7976
Telephone: 517-322-1825
Fax: 517-322-6352
www.michigan.gov/wagehour

Official Request 1222
Requestor: TROY SCHOOL DISTRICT

Project Description: REMODELING & ADDITIONS
Project Number: PHASE 1-BOULAN PARK, LARSON & SMITH MIDDLE

Oakland County

Official 2006 Prevailing Wage Rates for State Funded Projects

Issue Date: 11/9/2006
Contract must be awarded by 2/7/2007

Classification Name / Description		Straight Hourly	Time and a Half	Double Time	Overtime Provision
Asbestos & Lead Abatement Laborer					
Asbestos & Lead Abatement Laborer	MLDC	$31.30	$41.83	$52.35	H H H X X X X D Y
Asbestos & Lead Abatement, Hazardous Material Handler					
Asbestos and Lead Abatement, Hazardous Material Handler	AS207	$30.00	$41.55	$53.10	X X X X X X X D Y
Boilermaker					
Boilermaker	BO169	$48.71	$68.13	$87.54	H H D H D D D D Y
Apprentice Rates:					
1st 6 months		$37.07	$50.67	$64.26	
2nd 6 months		$38.03	$52.10	$66.18	
3rd 6 months		$39.00	$53.56	$68.12	
4th 6 months		$39.97	$55.02	$70.06	
5th 6 months		$40.58	$56.11	$71.64	
6th 6 months		$42.88	$59.38	$75.88	
7th 6 months		$44.83	$62.31	$79.78	
8th 6 months		$46.77	$65.21	$83.66	
Bricklayer					
Bricklayer, stone mason, pointer, cleaner, caulker	BR1	$46.06	$69.09	$92.12	H H D H D D D D N
Apprentice Rates:					
First 6 months		$29.18	$43.77	$58.36	
2nd 6 months		$31.01	$46.51	$62.02	
3rd 6 months		$32.82	$49.23	$65.64	
4th 6 months		$34.64	$51.96	$69.28	
5th 6 months		$36.47	$54.71	$72.94	
6th 6 months		$38.28	$57.43	$76.56	

Official Request #: 1222
Requestor: TROY SCHOOL DISTRICT
Project Description: REMODELING & ADDITIONS

Project Number: PHASE 1-BOULAN PARK, LARSON & SMITH MIDDLE
County: Oakland

Official Rate Schedule

Every contractor and subcontractor shall keep posted on the construction site, in a conspicuous place, a copy of all prevailing wage and fringe benefit rates prescribed in a contract.

Official 2006 Prevailing Wage Rates for State Funded Projects

Issue Date: 11/9/2006

Contract must be awarded by 2/7/2007

Classification Name / Description		Straight Hourly	Time and a Half	Double Time	Overtime Provision
Carpenter					
Carpet and Resilient Floor Layer, (does not include installation of prefabricated formica & parquet flooring which is to be paid carpenter rate)	CA1045	$40.22	$56.42	$72.61	H H H H D D D D N
Apprentice Rates:					
1st 6 months		$20.93	$25.25	$31.05	
2nd 6 months		$24.02	$31.26	$39.07	
3rd 6 months		$25.64	$33.59	$42.17	
4th 6 months		$27.26	$35.95	$45.33	
5th 6 months		$28.87	$38.28	$48.43	
6th 6 months		$30.50	$40.64	$51.57	
7th 6 months		$32.11	$42.96	$54.67	
8th 6 months		$33.73	$45.30	$57.79	
Carpenter, piledriver	CA687Z1	$44.37	$62.97	$81.56	H H D H D D D D Y
Apprentice Rates:					
1st Year		$27.63	$37.85	$48.08	
3rd 6 months		$29.49	$40.65	$51.80	
4th 6 months		$31.34	$43.42	$55.50	
5th 6 months		$33.21	$46.23	$59.24	
6th 6 months		$35.08	$49.03	$62.98	
7th 6 months		$36.92	$51.79	$66.66	
8th 6 months		$38.80	$54.61	$70.42	
Cement Mason					
Cement Mason	CE514	$41.37	$57.06	$73.78	H H D H H H H D N
Apprentice Rates:					
1st 6 months		$23.90	$31.75	$40.11	
2nd 6 months		$25.62	$34.26	$43.45	
3rd 6 months		$29.06	$39.27	$50.13	
4th 6 months		$32.52	$44.30	$56.83	
5th 6 months		$34.24	$46.80	$60.17	
6th 6 months		$37.68	$51.81	$66.85	
Drywall					
Drywall Taper	PT-22-D	$38.45	$50.90	$63.35	H H D H D D D D N
Apprentice Rates:					
First 3 months		$26.00	$32.23	$38.45	
Second 3 months		$28.49	$35.96	$43.43	
Second 6 months		$30.98	$39.69	$48.41	
Third 6 months		$33.47	$43.43	$53.39	
4th 6 months		$34.71	$45.29	$55.87	

Official Request #: 1222
Requestor: TROY SCHOOL DISTRICT
Project Description: REMODELING & ADDITIONS

Project Number: PHASE 1-BOULAN PARK, LARSON & SMITH MIDDLE
County: Oakland

Official Rate Schedule

Every contractor and subcontractor shall keep posted on the construction site, in a conspicuous place, a copy of all prevailing wage and fringe benefit rates prescribed in a contract.

Official 2006 Prevailing Wage Rates for State Funded Projects

Issue Date: 11/9/2006

Contract must be awarded by 2/7/2007

Classification Name / Description		Straight Hourly	Time and a Half	Double Time	Overtime Provision
Electrician, Inside wireman					
Electrician, Inside Wireman	EC-58-IW	$46.88	$64.00	$81.13	H H H H H H H D N
	Apprentice Rates:				
	0-1000 hours	$26.33	$33.18	$40.03	
	1000-2000 hours	$28.04	$35.75	$43.45	
	2000-3500 hours	$29.75	$38.31	$46.87	
	3500-5000 hours	$31.47	$40.90	$50.31	
	5000-6500 hours	$34.89	$46.03	$57.15	
	6500-8000 hours	$38.32	$51.17	$64.01	
Elevator Constructor					
Elevator Constructor Elevator Constructor	EL 36	$47.71		$81.45	D D D D D D D D Y
	Apprentice Rates:				
	1st Year Apprentice	$31.14		$49.70	
	2nd Year Apprentice	$34.82		$56.75	
	3rd Year Apprentice	$36.66		$60.28	
	4th Year Apprentice	$40.34		$67.33	
Glazier					
Glazier	GL-357	$41.56	$55.41		H H H H H H H H Y
	Apprentice Rates:				
	1st 6 months	$28.36	$35.29		
	2nd 6 months	$29.82	$37.44		
	3rd 6 months	$32.72	$41.72		
	4th 6 months	$34.18	$43.87		
	5th 6 months	$35.64	$46.03		
	6th 6 months	$37.09	$48.17		
	7th 6 months	$38.54	$50.31		
	8th 6 months	$41.46	$54.62		
Heat and Frost Insulator and Asbestos Worker					
Heat and Frost Insulators and Asbestos Workers	AS25	$42.80	$56.56	$70.32	H H H H H H H D Y
	Apprentice Rates:				
	1st Year	$25.05	$32.62	$40.19	
	2nd Year	$32.83	$41.78	$50.72	
	3rd Year	$34.54	$44.17	$53.80	
	4th Year	$37.30	$48.31	$59.32	
Industrial Door					
Industrial Door erection & construction	IR-25-STR-D	$33.32	$44.57	$55.82	H H D H H H D D Y

Official Request #: 1222
Requestor: TROY SCHOOL DISTRICT
Project Description: REMODELING & ADDITIONS

Project Number: PHASE 1-BOULAN PARK, LARSON & SMITH MIDDLE
County: Oakland

Official Rate Schedule

Every contractor and subcontractor shall keep posted on the construction site, in a conspicuous place, a copy of all prevailing wage and fringe benefit rates prescribed in a contract.

Official 2006 Prevailing Wage Rates for State Funded Projects

Issue Date: 11/9/2006

Contract must be awarded by 2/7/2007

Classification Name / Description			Straight Hourly	Time and a Half	Double Time	Overtime Provision
Ironworker						
Fence Erecting		IR-25-F	$38.28	$57.26	$76.23	H H D H H H D D Y
Glazing		IR-25-GZ1	$46.57	$69.69	$92.81	H H D H H H D D Y
Mesh Iron Work		IR-25-MR	$41.22	$59.07	$76.92	H H D H D D D D N
Pre-engineered Metal Work		IR-25-PE-Z1&Z2	$39.23	$49.73	$60.23	H H H X X X D D Y
	Apprentice Rates:					
	1st Level		$24.11	$30.04	$35.98	
	2nd Level		$26.00	$32.79	$39.59	
	3rd Level		$27.87	$35.51	$43.15	
	4th Level		$29.74	$38.23	$46.71	
	5th Level		$31.59	$40.92	$50.24	
	6th Level		$33.48	$43.66	$53.84	
Reinforced Iron Work		IR-25-RF	$46.45	$66.75	$87.05	H H D H D D D D N
Rigging Work		IR-25-RIG	$50.42	$75.53	$100.64	H H H H H H H D N
Siding & Decking		IR-25-SD	$43.31	$64.80	$86.29	H H D H H H D D Y
Structural, ornamental, conveyor, welder and pre-cast Apprentice rates apply to structural, converyor, fence, glazing, reinforced, rigging, & siding decking		IR-25-STR	$50.55	$75.66	$100.77	H H D H H H D D Y
	Apprentice Rates:					
	Level 1		$25.45	$38.01	$50.57	
	Level 2		$27.96	$41.78	$55.59	
	Level 3		$30.47	$45.55	$60.61	
	Level 4		$32.98	$49.31	$65.63	
	Level 5		$35.49	$53.07	$70.65	
	Level 6		$38.01	$56.85	$75.69	
	Level 7		$40.50	$60.59	$80.67	
	Level 8		$43.02	$64.37	$85.71	

Official Request #: 1222
Requestor: TROY SCHOOL DISTRICT
Project Description: REMODELING & ADDITIONS

Project Number: PHASE 1-BOULAN PARK, LARSON & SMITH MIDDLE
County: Oakland

Official Rate Schedule

Every contractor and subcontractor shall keep posted on the construction site, in a conspicuous place, a copy of all prevailing wage and fringe benefit rates prescribed in a contract.

Official 2006 Prevailing Wage Rates for State Funded Projects

Issue Date: 11/9/2006

Contract must be awarded by 2/7/2007

Classification Name / Description		Straight Hourly	Time and a Half	Double Time	Overtime Provision
Laborer					
Construction Laborer, Mason Tender, Carpenter Tender, Drywall Handler, Cement Finisher tender, concrete chute and concrete Bucket Handler, Concrete Laborer, Demolition Laborer	L1076-A-A	$36.48	$51.89	$67.29	H H D H D D D D Y
Apprentice Rates:					
0-1,000 work hours		$30.91	$43.53	$56.15	
1,001-2,000 work hours		$32.02	$45.20	$58.37	
2,001-3,000 work hours		$33.14	$46.88	$60.61	
3,001-4,000 work hours		$35.37	$50.23	$65.07	
Signal man (on sewer & caisson work); air,electric or gasoline tool operator (including concrete vibrator operator,acetylene torch & air hammer operator); scaffold builder, caisson worker	L1076-A-B	$36.74	$52.28	$67.81	H H D H D D D D Y
Lansing Burner, Blaster & Powder Man	L1076-A-C	$37.23	$53.01	$68.79	H H D H D D D D Y
Furnance battery heater tender, burning bar & oxy-acetylene gun, expediter man, top man and/or bottom man (blast furnace work)	L1076-A-D	$36.98	$52.64	$68.29	H H D H D D D D Y
Cleaner/ sweeper laborer, furniture laborer	L1076-A-E	$31.03	$43.71	$56.39	H H D H D D D D Y
Plasterer Tender, Plastering Machine Operator	LPT-1	$37.86	$53.96	$70.05	H H D H D D D D N
Apprentice Rates:					
0 - 1,000 hours		$30.91	$43.53	$56.15	
1,001 - 2,000 hours		$32.02	$45.20	$58.37	
2,001 - 3,000 hours		$33.14	$46.88	$60.61	
3,001 - 4,000 hours		$35.37	$50.23	$65.07	
Laborer - Hazardous					
Class A Laborer - performing work in conjunction with site preparation and other preliminary work prior to actual removal, handling, or containment of hazardous waste substances not requiring use of personal protective equipment required by state or federal regulations; or a laborer performing work in conjunction with the removal, handling, or containment of hazardous waste substances when used of personal protective equipment level "D" is required.	LHAZ-Z2-A	$35.36	$50.45	$65.53	H H H H H H H D Y
Apprentice Rates:					
0-1,000 work hours		$29.86	$42.20	$54.53	
1,001-2,000 work hours		$30.96	$43.85	$56.73	
2,001-3,000 work hours		$32.06	$45.50	$58.93	
3,001-4,000 work hours		$34.26	$48.80	$63.33	

Official Request #: 1222
Requestor: TROY SCHOOL DISTRICT
Project Description: REMODELING & ADDITIONS

Project Number: PHASE 1-BOULAN PARK, LARSON & SMITH MIDDLE
County: Oakland

Official Rate Schedule

Every contractor and subcontractor shall keep posted on the construction site, in a conspicuous place, a copy of all prevailing wage and fringe benefit rates prescribed in a contract.

Classification Name / Description		Straight Hourly	Time and a Half	Double Time	Overtime Provision
Class B Laborer - performing work in conjunction with the removal, handling, or containment of hazardous waste substances when the use of personal protective equipment levels "A", "B" or "C" is required.	LHAZ-Z2-B	$36.36	$51.95	$67.53	H H H H H H H D Y
Apprentice Rates:					
0-1,000 work hours		$30.60	$43.31	$56.01	
1,001-2,000 work hours		$31.76	$45.05	$58.33	
2,001-3,000 work hours		$32.91	$46.78	$60.63	
3,001-4,000 work hours		$35.21	$50.22	$65.23	
Laborer Underground - Tunnel, Shaft & Caisson					
Class I - Tunnel, shaft and caisson laborer, dump man, shanty man, hog house tender, testing man (on gas), and watchman.	LAUCT-Z1-1	$31.54	$42.13	$52.71	H H H H H H H D Y
Apprentice Rates:					
0-1,000 work hours		$26.75	$34.94	$43.13	
1,001-2,000 work hours		$27.71	$36.38	$45.05	
2,001-3,000 work hours		$28.66	$37.81	$46.95	
3,001-4,000 work hours		$30.58	$40.69	$50.79	
Class II - Manhole, headwall, catch basin builder, bricklayer tender, mortar man, material mixer, fence erector, and guard rail builder.	LAUCT-Z1-2	$31.65	$42.29	$52.93	H H H H H H H D Y
Apprentice Rates:					
0-1,000 work hours		$26.83	$35.06	$43.29	
1,001-2,000 work hours		$27.79	$36.50	$45.21	
2,001-3,000 work hours		$28.76	$37.95	$47.15	
3,001-4,000 work hours		$30.69	$40.85	$51.01	
Class III - Air tool operator (jack hammer man, bush hammer man and grinding man), first bottom man, second bottom man, cage tender, car pusher, carrier man, concrete man, concrete form man, concrete repair man, cement invert laborer, cement finisher, concrete shoveler, conveyor man, floor man, gasoline and electric tool operator, gunnite man, grout operator, welder, heading dinky man, inside lock tender, pea gravel operator, pump man, outside lock tender, scaffold man, top signal man, switch man, track man, tugger man, utility man, vibrator man, winch operator, pipe jacking man, wagon drill and air track operator and concrete saw operator (under 40 h.p.).	LAUCT-Z1-3	$31.71	$42.38	$53.05	H H H H H H H D Y
Apprentice Rates:					
0-1,000 work hours		$26.87	$35.12	$43.37	
1,001-2,000 work hours		$27.84	$36.57	$45.31	
2,001-3,000 work hours		$28.81	$38.03	$47.25	
3,001-4,000 work hours		$30.74	$40.93	$51.11	

Official Request #: 1222
Requestor: TROY SCHOOL DISTRICT
Project Description: REMODELING & ADDITIONS

Project Number: PHASE 1-BOULAN PARK, LARSON & SMITH MIDDLE
County: Oakland

Official Rate Schedule

Every contractor and subcontractor shall keep posted on the construction site, in a conspicuous place, a copy of all prevailing wage and fringe benefit rates prescribed in a contract.

Classification Name / Description		Straight Hourly	Time and a Half	Double Time	Overtime Provision
Class IV - Tunnel, shaft and caisson mucker, bracer man, liner plate man, long haul dinky driver and well point man.	LAUCT-Z1-4	$31.89	$42.65	$53.41	H H H H H H H D Y
Apprentice Rates:					
0-1,000 work hours		$27.01	$35.33	$43.65	
1,001-2,000 work hours		$27.99	$36.80	$45.61	
2,001-3,000 work hours		$28.96	$38.25	$47.55	
3,001-4,000 work hours		$30.91	$41.18	$51.45	
Class V - Tunnel, shaft and caisson miner, drill runner, keyboard operator, power knife operator, reinforced steel or mesh man (e.g. wire mesh, steel mats, dowel bars)	LAUCT-Z1-5	$32.14	$43.03	$53.91	H H H H H H H D Y
Apprentice Rates:					
0-1,000 work hours		$27.20	$35.61	$44.03	
1,001-2,000 work hours		$28.19	$37.10	$46.01	
2,001-3,000 work hours		$29.17	$38.57	$47.97	
3,001-4,000 work hours		$31.15	$41.54	$51.93	
Class VI - Dynamite man and powder man.	LAUCT-Z1-6	$32.47	$43.52	$54.57	H H H H H H H D Y
Apprentice Rates:					
0-1,000 work hours		$27.45	$35.99	$44.53	
1,001-2,000 work hours		$28.45	$37.49	$46.53	
2,001-3,000 work hours		$29.45	$38.99	$48.53	
3,001-4,000 work hours		$31.47	$42.02	$52.57	
Class VII - Restoration laborer, seeding, sodding, planting, cutting, mulching and topsoil grading and the restoration of property such as replacing mail boxes, wood chips, planter boxes and flagstones.	LAUCT-Z1-7	$25.75	$33.44	$41.13	H H H H H H H D Y
Apprentice Rates:					
0-1,000 work hours		$22.41	$28.43	$34.45	
1,001-2,000 work hours		$23.07	$29.42	$35.77	
2,001-3,000 work hours		$23.74	$30.43	$37.11	
3,001-4,000 work hours		$25.08	$32.43	$39.79	
Landscape Laborer					
Landscape specialist includes; air, gas, and diesel equipment operator, lawn sprinkler installer.	LLAN-Z1-A	$23.38	$32.46	$41.54	X X H X X X H D Y
Landscape laborer; small power tool operator, lawn sprinkler installer helper, material mover, truck driver.	LLAN-Z1-B	$19.16	$26.13	$33.10	X X H X X X H D Y

Official Request #: 1222
Requestor: TROY SCHOOL DISTRICT
Project Description: REMODELING & ADDITIONS

Project Number: PHASE 1-BOULAN PARK, LARSON & SMITH MIDDLE
County: Oakland

Official Rate Schedule

Every contractor and subcontractor shall keep posted on the construction site, in a conspicuous place, a copy of all prevailing wage and fringe benefit rates prescribed in a contract.

Official 2006 Prevailing Wage Rates for State Funded Projects

Issue Date: 11/9/2006
Contract must be awarded by 2/7/2007

Classification Name	Description		Straight Hourly	Time and a Half	Double Time	Overtime Provision
Marble Finisher						
Marble Finisher		TT32-MF	$37.17	$46.87	$56.57	H H D H D D D D N
	Apprentice Rates:					
	Level 1		$18.16	$23.25	$28.35	
	Level 2		$19.18	$24.79	$30.39	
	Level 3		$23.19	$29.47	$35.75	
	Level 4		$24.45	$31.36	$38.27	
	Level 5		$25.74	$32.85	$39.97	
	Level 6		$27.13	$34.62	$42.10	
	Level 7		$28.57	$36.10	$43.63	
	Level 8		$29.85	$37.62	$45.40	
Marble Mason						
Marble Mason		TT32-MM	$42.76	$55.51	$68.25	H H D H D D D D N
	Apprentice Rates:					
	Level 1		$23.56	$30.36	$37.16	
	Level 2		$26.21	$33.74	$41.28	
	Level 3		$28.90	$36.71	$44.51	
	Level 4		$31.20	$39.83	$48.46	
	Level 5		$33.26	$42.19	$51.12	
	Level 6		$36.52	$47.03	$57.53	
	Level 7		$37.33	$48.11	$58.89	
	Level 8		$38.14	$49.33	$60.51	
Operating Engineer						
Crane with boom & jib or leads 120' or longer		EN-324-A120	$47.81	$64.26	$80.70	H H D H D D D D Y
Crane with boom & jib or leads 140' or longer		EN-324-A140	$48.63	$65.49	$82.34	H H D H D D D D Y
Crane with boom & jib or leads 220' or longer		EN-324-A220	$48.93	$65.94	$82.94	H H D H D D D D Y
Crane with boom & jib or leads 300' or longer		EN-324-A300	$50.43	$68.19	$85.94	H H D H D D D D Y
Crane with boom & jib or leads 400' or longer		EN-324-A400	$51.93	$70.44	$88.94	H H D H D D D D Y
Compressor or welding machine		EN-324-CW	$36.96	$47.98	$59.00	H H D H D D D D Y
Forklift, lull, extend-a-boom forklift		EN-324-FL	$44.27	$58.95	$73.62	H H D H D D D D Y
Fireman or oiler		EN-324-FO	$35.93	$46.44	$56.94	H H D H D D D D Y
Regular crane, job mechanic, concrete pump		EN-324-RC	$46.95	$62.97	$78.98	H H D H D D D D Y

Official Request #: 1222
Requestor: TROY SCHOOL DISTRICT
Project Description: REMODELING & ADDITIONS

Project Number: PHASE 1-BOULAN PARK, LARSON & SMITH MIDDLE
County: Oakland

Official Rate Schedule

Every contractor and subcontractor shall keep posted on the construction site, in a conspicuous place, a copy of all prevailing wage and fringe benefit rates prescribed in a contract.

Classification Name / Description		Straight Hourly	Time and a Half	Double Time	Overtime Provision
Regular engineer, hydro-excavator, remote controlled concrete breaker	EN-324-RE	$45.98	$61.51	$77.04	H H D H D D D D Y
Apprentice Rates:					
Period 1		$36.47	$47.34	$58.22	
Period 2		$38.02	$49.67	$61.32	
Period 3		$39.57	$52.00	$64.42	
Period 4		$41.12	$54.32	$67.52	
Period 5		$42.68	$56.66	$70.64	
Period 6		$44.23	$58.99	$73.74	
Operating Engineer - Marine Construction					
Diver/Wet Tender, Engineer (hydraulic dredge)	GLF-1	$47.11	$61.89	$76.66	X X H H H H H D Y
Holidays paid at $91.44 per hour					
Subdivision of county	all Great Lakes, islands therein, & connecting & tributary waters				
Crane/Backhoe Operator, Mechanic/Welder, Assistant Engineer (hydraulic dredge), Leverman (hydraulic dredge), Diver Tender	GLF-2	$45.61	$59.64	$73.66	X X H H H H H D Y
Holidays paid $87.69 per hour					
Subdivision of county	All Great Lakes, islands therein, & connecting & tributary waters				
Deck Equipment Operator, Machineryman, Maintenance of Crane (over 50 ton capacity) or Backhoe (115,000 lbs. or more), Tug/Launch Operator, Loader, Dozer and like equipment on Barge, Breakwater Wall, Slip/Doc or Scow, Deck Machinery	GLF-3	$42.56	$55.06	$67.56	X X H H H H H D Y
Holidays paid at $80.06 per hour					
Subdivision of county	All Great Lakes, islands therein, & connecting & tributary waters				
Deck Equipment Operator, (Machineryman/Fireman), (4 equipment units or more), Deck Hand, Deck Engineer, & Crane Maintenance 50 ton capacity and under or Backhoe weighing 115,000 lbs or less, Assistant Tug Operator	GLF-4	$38.36	$48.76	$59.16	X X H H H H H D Y
Holidays paid at $69.56 per hour					
Subdivision of county	All Great Lakes, islands therein, & connecting & tributary waters				

Official Request #: 1222
Requestor: TROY SCHOOL DISTRICT
Project Description: REMODELING & ADDITIONS

Project Number: PHASE 1-BOULAN PARK, LARSON & SMITH MIDDLE
County: Statewide

Official Rate Schedule

Every contractor and subcontractor shall keep posted on the construction site, in a conspicuous place, a copy of all prevailing wage and fringe benefit rates prescribed in a contract.

Official 2006 Prevailing Wage Rates for State Funded Projects

Issue Date: 11/9/2006

Contract must be awarded by 2/7/2007

Classification Name / Description		Straight Hourly	Time and a Half	Double Time	Overtime Provision
Operating Engineer Hazardous Waste Class I					
Level A - Fully encapsulating chemical resistant suit w/ pressure demand, full face piece SCBA or pressure demand supplied air respirator w/ escape SCBA. The highest available level of respiratory, skin and eye protection.	EN-324-HWCI-Z1A	$44.87	$60.16	$75.50	H H H H H H H D Y
Apprentice Rates:					
1st 6 months		$35.20	$45.96	$56.71	
2nd 6 months		$36.74	$48.27	$59.79	
3rd 6 months		$38.28	$50.58	$62.87	
4th 6 months		$39.81	$52.87	$65.93	
5th 6 months		$41.35	$55.19	$69.01	
6th 6 months		$42.88	$57.48	$72.07	
Level B & C protection. B - Pressure demand, full face SCBA or pressure demand supplied air respirator w/ escape SCBA w/chemical resistant clothing. C - Full face piece, air purifying canister-equipped respirator w/chemical resistant clothing.	EN-324-HWCI-Z1B	$43.91	$58.80	$73.69	H H H H H H H D Y
Apprentice Rates:					
1st 6 months		$34.53	$44.95	$55.37	
2nd 6 months		$36.02	$47.19	$58.35	
3rd 6 months		$37.51	$49.42	$61.33	
4th 6 months		$39.00	$51.66	$64.31	
5th 6 months		$40.49	$53.89	$67.29	
6th 6 months		$41.98	$56.13	$70.27	
Level D - Coveralls, safety boots, glasses or chemical splash goggles and hard hats.	EN-324-HWCI-Z1D	$42.61	$56.85	$71.09	H H H H H H H D Y
Apprentice Rates:					
1st 6 months		$33.62	$43.59	$53.55	
2nd 6 months		$35.05	$45.74	$56.41	
3rd 6 months		$36.47	$47.87	$59.25	
4th 6 months		$37.90	$50.01	$62.11	
5th 6 months		$39.31	$52.12	$64.93	
6th 6 months		$40.74	$54.27	$67.79	
Level D When Capping Landfill Coveralls, safety boots, glasses or chemical splash goggles and hard hats.	EN-324-HWCI-Z1DCL	$42.36	$56.47	$70.58	H H H H H H H D Y
Apprentice Rates:					
1st 6 months		$33.45	$43.33	$53.21	
2nd 6 months		$34.85	$45.43	$56.01	
3rd 6 months		$36.26	$47.54	$58.83	
4th 6 months		$37.68	$49.68	$61.67	
5th 6 months		$39.09	$51.80	$64.49	
6th 6 months		$40.50	$53.90	$67.31	

Official Request #: 1222
Requestor: TROY SCHOOL DISTRICT
Project Description: REMODELING & ADDITIONS

Project Number: PHASE 1-BOULAN PARK, LARSON & SMITH MIDDLE
County: Oakland

Official Rate Schedule

Every contractor and subcontractor shall keep posted on the construction site, in a conspicuous place, a copy of all prevailing wage and fringe benefit rates prescribed in a contract.

Classification Name / Description		Straight Hourly	Time and a Half	Double Time	Overtime Provision
Operating Engineer Hazardous Waste Class II					
Level A - Fully encapsulating chemical resistant suit w/ pressure demand, full face piece SCBA or pressure demand supplied air respirator w/ escape SCBA. The highest available level of respiratory, skin and eye protection.	EN-324-HWCII-Z1A	$40.64	$53.88	$67.13	H H H H H H H D Y
Level B & C protection. B - Pressure demand, full face SCBA or pressure demand supplied air respirator w/ escape SCBA w/chemical resistant clothing. C - Full face piece, air purifying canister-equipped respirator w/chemical resistant clothing.	EN-324-HWCII-Z1B	$39.68	$52.45	$65.22	H H H H H H H D Y
Level D - Coveralls, safety boots, glasses or chemical splash goggles and hard hats.	EN-324-HWCII-Z1D	$38.38	$50.50	$62.62	H H H H H H H D Y
Level D When Capping Landfill Coveralls, safety boots, glasses or chemical splash goggles and hard hats.	EN-324-HWCII-Z1DCL	$38.14	$50.13	$62.12	H H H H H H H D Y
Operating Engineer Hazardous Waste Crane w/ Boom & Jib leads 140' or longer					
Level A - Fully encapsulating chemical resistant suit w/ pressure demand, full face piece SCBA or pressure demand supplied air respirator w/ escape SCBA. The highest available level of respiratory, skin and eye protection.	EN-324-HW140-Z1A	$47.51	$64.14	$80.80	H H H H H H H D Y
Level B & C protection. B - Pressure demand, full face SCBA or pressure demand supplied air respirator w/ escape SCBA w/chemical resistant clothing. C - Full face piece, air purifying canister-equipped respirator w/chemical resistant clothing.	EN-324-HW140-Z1B	$46.57	$62.79	$79.00	H H H H H H H D Y
Level D Coveralls, safety boots, glasses or chemical splash goggles and hard hats.	EN-324-HW140-Z1D	$45.27	$60.84	$76.40	H H H H H H H D Y
Level D When Capping Landfill Coveralls, safety boots, glasses or chemical splash goggles and hard hats.	EN-324-HW140-Z1DCL	$45.02	$59.71	$75.15	H H H H H H H D Y
Operating Engineer Hazardous Waste Crane w/ Boom & Jib leads 220' or longer					
Level A - Fully encapsulating chemical resistant suit w/ pressure demand, full face piece SCBA or pressure demand supplied air respirator w/ escape SCBA. The highest available level of respiratory, skin and eye protection.	EN-324-HW220-Z1A	$47.81	$64.65	$81.48	H H H H H H H D Y
Level B & C protection. B - Pressure demand, full face SCBA or pressure demand supplied air respirator w/ escape SCBA w/chemical resistant clothing. C - Full face piece, air purifying canister-equipped respirator w/chemical resistant clothing.	EN-324-HW220-Z1B	$46.87	$63.23	$79.60	H H H H H H H D Y

Official Request #: 1222
Requestor: TROY SCHOOL DISTRICT
Project Description: REMODELING & ADDITIONS

Project Number: PHASE 1-BOULAN PARK, LARSON & SMITH MIDDLE
County: Oakland

Official Rate Schedule

Every contractor and subcontractor shall keep posted on the construction site, in a conspicuous place, a copy of all prevailing wage and fringe benefit rates prescribed in a contract.

Classification Name / Description		Straight Hourly	Time and a Half	Double Time	Overtime Provision
Level D Coveralls, safety boots, glasses or chemical splash goggles and hard hats.	EN-324-HW220-Z1D	$45.57	$61.28	$77.00	H H H H H H H D Y
Level D When Capping Landfill Coveralls, safety boots, glasses or chemical splash goggles and hard hats.	EN-324-HW220-Z1DCL	$45.32	$60.90	$76.49	H H H H H H H D Y
Operating Engineer Hazardous Waste Regular Crane, Job Mechanic, Dragline Operator, Boom Truck Operator, and Concrete Pump with Boom Operator					
Level D - Coveralls, safety boots, glasses or chemical splash goggles and hard hats.	EN-324-HWRC-Z1D	$43.58	$58.30	$73.02	H H H H H H H D Y
Operating Engineer Hazardous Waste Regular Crane, Job Mechanic, Dragline Operator, Boom Truck Operator, Power Shovel Operator and Concrete Pump with boom					
Level D When Capping Landfill Coveralls, safety boots, glasses or chemical splash goggles and hard hats.	EN-324-HWRC-Z1DCL	$42.72	$57.01	$71.30	H H H H H H H D Y
Operating Engineer Hazardous Waste Regular Crane, Job Mechanic, Dragline Operator, Boom Truck Operator, Power Shovel Operator and Concrete Pump with booms					
Level B & C protection. B - Pressure demand, full face SCBA or pressure demand supplied air respirator w/ escape SCBA w/chemical resistant clothing. C - Full face piece, air purifying canister-equipped respirator w/chemical resistant clothing.	EN-324-HWRC-Z1B	$44.88	$60.25	$75.62	H H H H H H H D Y
Operating Engineer Hazardous Waste Regular Crane, Job Mechanic, Dragline Operator, Boom Truck Operator, Power Shovel Operators and Concrete Pump with booms					
Level A - Fully encapsulating chemical resistant suit w/ pressure demand, full face piece SCBA or pressure demand supplied air respirator w/ escape SCBA. The highest available level of respiratory, skin and eye protection.	EN-324-HWRC-Z1A	$45.83	$61.68	$77.53	H H H H H H H D Y
Operating Engineer Steel Work					
Crane w/ 120' boom or longer	EN-324-SW120	$51.51	$69.80	$88.08	H H D H H H D D Y
Crane w/ 120' boom or longer w/ Oiler	EN-324-SW120-O	$52.51	$71.30	$90.08	H H D H H H D D Y
Crane w/ 140' boom or longer	EN-324-SW140	$52.69	$71.57	$90.44	H H D H H H D D Y
Crane w/ 140' boom or longer W/ Oiler	EN-324-SW140-O	$53.69	$73.07	$92.44	H H D H H H D D Y
Boom & Jib 220' or longer	EN-324-SW220	$52.96	$71.97	$90.98	H H D H H H D D Y
Crane w/ 220' boom or longer w/ Oiler	EN-324-SW220-O	$53.96	$73.47	$92.98	H H D H H H D D Y

Official Request #: 1222
Requestor: TROY SCHOOL DISTRICT
Project Description: REMODELING & ADDITIONS

Project Number: PHASE 1-BOULAN PARK, LARSON & SMITH MIDDLE
County: Oakland

Official Rate Schedule

Every contractor and subcontractor shall keep posted on the construction site, in a conspicuous place, a copy of all prevailing wage and fringe benefit rates prescribed in a contract.

Official 2006 Prevailing Wage Rates for State Funded Projects

Issue Date: 11/9/2006

Contract must be awarded by 2/7/2007

Classification Name / Description			Straight Hourly	Time and a Half	Double Time	Overtime Provision
Boom & Jib 300' or longer		EN-324-SW300	$54.46	$74.22	$93.98	H H D H H H D D Y
Crane w/ 300' boom or longer w/ Oiler		EN-324-SW300-O	$55.46	$75.72	$95.98	H H D H H H D D Y
Boom & Jib 400' or longer		EN-324-SW400	$55.96	$76.47	$96.98	H H D H H H D D Y
Crane w/ 400' boom or longer w/ Oiler		EN-324-SW400-O	$56.96	$77.97	$98.98	H H D H H H D D Y
Crane Operator & Job Mechanic		EN-324-SWCO	$51.15	$69.26	$87.36	H H D H H H D D Y
	Apprentice Rates:					
	0-999 hours		$40.04	$52.72	$65.39	
	1,000-1,999 hours		$41.85	$55.43	$69.01	
	2,000-2,999 hours		$43.66	$58.14	$72.63	
	3,000-3,999 hours		$45.48	$60.88	$76.27	
	4,000-4,999 hours		$47.28	$63.58	$79.87	
	5,000 hours		$49.10	$66.31	$83.51	
Crane w/ Oiler		EN-324-SWCO-O	$52.15	$70.76	$89.36	H H D H H H D D Y
Compressor or Welder Operator		EN-324-SWCW	$43.70	$58.08	$72.46	H H D H H H D D Y
Hoisting Operator		EN-324-SWHO	$50.51	$68.30	$86.08	H H D H H H D D Y
Oiler		EN-324-SWO	$42.29	$55.97	$69.64	H H D H H H D D Y
Tower Crane & Derrick where work is 50' or more above first level		EN-324-SWTD50	$52.24	$70.89	$89.54	H H D H H H D D Y
Tower Crane & Derrick 50' or more w/ Oiler where work station is 50' or more above first level		EN-324-SWTD50-O	$53.24	$72.39	$91.54	H H D H H H D D Y
Operating Engineer Underground						
Class I Equipment		EN-324A1-UC1	$42.37	$56.45	$70.54	H H H H H H H D Y
	Apprentice Rates:					
	0-999 hours		$33.46	$43.32	$53.18	
	1,000-1,999 hours		$34.88	$45.45	$56.02	
	2,000-2,999 hours		$36.28	$47.55	$58.82	
	3,000-3,999 hours		$37.68	$49.65	$61.62	
	4,000-4,999 hours		$39.10	$51.79	$64.46	
	5,000-5,999 hours		$40.51	$53.90	$67.28	
Class II Equipment		EN-324A1-UC2	$37.89	$49.74	$61.59	H H H H H H H D Y

Official Request #: 1222
Requestor: TROY SCHOOL DISTRICT
Project Description: REMODELING & ADDITIONS

Project Number: PHASE 1-BOULAN PARK, LARSON & SMITH MIDDLE
County: Oakland

Official Rate Schedule

Every contractor and subcontractor shall keep posted on the construction site, in a conspicuous place, a copy of all prevailing wage and fringe benefit rates prescribed in a contract.

Official 2006 Prevailing Wage Rates for State Funded Projects

Issue Date: 11/9/2006
Contract must be awarded by 2/7/2007

Classification Name / Description		Straight Hourly	Time and a Half	Double Time	Overtime Provision
Class III Equipment	EN-324A1-UC3	$37.16	$48.64	$60.12	H H H H H H H D Y
Class IV Equipment	EN-324A1-UC4	$36.59	$47.79	$58.99	H H H H H H H D Y
Master Mechanic	EN-324A1-UMM	$42.62	$56.83	$71.05	H H H H H H H D Y
Painter					
Painter (8 hours of repaint work performed on Sunday shall be paid time & one half rate)	PT-22-P	$38.01	$50.24	$62.47	H H D H D D D D N
Apprentice Rates:					
First 6 months		$25.78	$31.89	$38.01	
Second 6 months		$29.45	$37.40	$45.35	
Third 6 months		$30.67	$39.23	$47.79	
Fourth 6 months		$31.89	$41.06	$50.23	
Fifth 6 months		$33.12	$42.91	$52.69	
Final 6 months		$34.34	$44.73	$55.13	
Sandblasting & spraywork performed, on highway bridges, overpases, tanks or steel, OR spraywork & sandblasting done with a scaffold height of 40' above the floor level	PT-22-S	$38.81	$51.44	$64.07	H H D H D D D D N
Pipefitter					
Pipefitter	PF-636	$51.46	$66.44	$81.41	H H D H D D D D N
Apprentice Rates:					
1st & 2nd periods		$26.23	$33.23	$40.23	
3rd period		$28.23	$36.23	$44.23	
4th period		$29.48	$38.11	$46.73	
5th period		$30.73	$39.98	$49.23	
6th period		$31.98	$41.85	$51.73	
7th period		$33.23	$43.73	$54.23	
8th period		$34.23	$45.23	$56.23	
9th period		$35.23	$46.73	$58.23	
10th period		$36.66	$48.87	$61.09	

Official Request #: 1222
Requestor: TROY SCHOOL DISTRICT
Project Description: REMODELING & ADDITIONS

Project Number: PHASE 1-BOULAN PARK, LARSON & SMITH MIDDLE
County: Oakland

Official Rate Schedule

Every contractor and subcontractor shall keep posted on the construction site, in a conspicuous place, a copy of all prevailing wage and fringe benefit rates prescribed in a contract.

Official 2006 Prevailing Wage Rates for State Funded Projects

Issue Date: 11/9/2006

Contract must be awarded by 2/7/2007

Classification Name / Description		Straight Hourly	Time and a Half	Double Time	Overtime Provision
Plasterer					
Plasterer	BR1P	$40.97	$61.46	$81.94	H H H H H H H D N
	Apprentice Rates:				
	1st 6 months	$20.77	$31.16	$41.54	
	2nd 6 months	$24.16	$36.24	$48.32	
	3rd 6 months	$27.52	$41.28	$55.04	
	4th 6 months	$30.88	$46.32	$61.76	
	5th 6 months	$34.25	$49.58	$66.10	
	6th 6 months	$37.61	$56.42	$75.22	
Plasterer	PL67	$38.32	$52.78	$67.24	H H H X D D D D N
	Apprentice Rates:				
	1st 6 months	$20.97	$26.76	$32.54	
	2nd 6 months	$23.86	$31.09	$38.32	
	3rd 6 months	$26.75	$35.42	$44.10	
	4th 6 months	$29.64	$39.76	$49.88	
	5th 6 months	$32.54	$44.11	$55.68	
	6th 6 months	$35.43	$48.44	$61.46	
Plumber					
Plumber	PL-98	$49.58	$67.10	$82.61	H H D H D D D D Y
	Apprentice Rates:				
	Period 1	$18.11	$25.11	$32.11	
	Period 2	$20.30	$28.39	$36.49	
	Period 3	$30.47	$40.85	$50.13	
	Period 4	$31.16	$41.89	$51.51	
	Period 5	$32.45	$43.83	$54.09	
	Period 6	$33.73	$45.75	$56.65	
	Period 7	$35.01	$47.67	$59.21	
	Period 8	$36.31	$49.61	$61.81	
	Period 9	$37.59	$51.53	$64.37	
	Period 10	$38.87	$53.45	$66.93	

Official Request #: 1222
Requestor: TROY SCHOOL DISTRICT
Project Description: REMODELING & ADDITIONS

Project Number: PHASE 1-BOULAN PARK, LARSON & SMITH MIDDLE
County: Oakland

Official Rate Schedule

Every contractor and subcontractor shall keep posted on the construction site, in a conspicuous place, a copy of all prevailing wage and fringe benefit rates prescribed in a contract.

Official 2006 Prevailing Wage Rates for State Funded Projects

Issue Date: 11/9/2006

Contract must be awarded by 2/7/2007

Classification Name / Description		Straight Hourly	Time and a Half	Double Time	Overtime Provision
Roofer					
Commercial Roofer	RO-149-WOM	$45.01	$58.72	$72.42	H H D H H H D D N
Straight time is not to exceed ten (10) hours per day or forty (40) hours per week.					
	Apprentice Rates:				
	Apprentice 1	$29.78	$36.88	$44.64	
	Apprentice 2	$33.80	$41.54	$49.52	
	Apprentice 3	$35.16	$43.50	$52.14	
	Apprentice 4	$36.15	$44.94	$54.06	
	Apprentice 5	$37.33	$46.64	$56.32	
	Apprentice 6	$38.67	$48.58	$58.90	
Sheet Metal Worker					
Sheet Metal Worker	SHM-80	$51.82	$69.04	$86.25	H H D H D D D D Y
	Apprentice Rates:				
	First Year	$34.61	$43.22	$51.83	
	Second Year	$35.98	$45.27	$54.57	
	Third Year	$37.36	$47.34	$57.33	
	Fourth Year	$40.11	$51.47	$62.83	
	Fifth Year	$42.86	$55.59	$68.33	
Siding & Decking	SHM-80-SD	$34.58	$46.03	$57.48	H H H H H H H D Y
Sound & Communication					
Installer/Technician	EC-58-SC	$29.33	$41.30	$53.26	H H H H H H H D N
	Apprentice Rates:				
	Period 1	$17.16	$23.04	$28.93	
	Period 2	$18.38	$24.88	$31.37	
	Period 3	$19.59	$26.69	$33.79	
	Period 4	$20.81	$28.53	$36.23	
	Period 5	$22.02	$30.33	$38.65	
	Period 6	$23.24	$32.17	$41.09	

Official Request #: 1222
Requestor: TROY SCHOOL DISTRICT
Project Description: REMODELING & ADDITIONS

Project Number: PHASE 1-BOULAN PARK, LARSON & SMITH MIDDLE
County: Oakland

Official Rate Schedule

Every contractor and subcontractor shall keep posted on the construction site, in a conspicuous place, a copy of all prevailing wage and fringe benefit rates prescribed in a contract.

Official 2006 Prevailing Wage Rates for State Funded Projects

Issue Date: 11/9/2006

Contract must be awarded by 2/7/2007

Classification Name	Description		Straight Hourly	Time and a Half	Double Time	Overtime Provision
Sprinkler Fitter						
Sprinkler Fitter		SP 704	$52.17	$70.51	$88.85	H H D H D D D D Y
	Apprentice Rates:					
	1st Period		$21.82	$29.16	$36.50	
	2nd Period		$32.00	$40.25	$48.51	
	3rd Period		$33.83	$43.00	$52.17	
	4th Period		$35.67	$45.76	$55.85	
	5th Period		$37.50	$48.51	$59.51	
	6th Period		$39.34	$51.27	$63.19	
	7th Period		$41.17	$54.01	$66.85	
	8th Period		$43.00	$56.75	$70.51	
	9th Period		$44.84	$59.51	$74.19	
	10th Period		$46.67	$62.26	$77.85	
Terrazzo						
Terrazzo Finisher		TT32-TRF	$37.57	$47.47	$57.37	H H D H D D D D N
	Apprentice Rates:					
	Level 1		$19.15	$24.74	$30.33	
	Level 2		$19.78	$25.69	$31.59	
	Level 3		$12.49	$18.74	$24.98	
	Level 4		$24.38	$31.25	$38.13	
	Level 5		$25.67	$32.75	$39.83	
	Level 6		$27.56	$35.09	$42.62	
	Level 7		$28.50	$36.12	$43.74	
	Level 8		$29.78	$37.65	$45.51	
Terrazzo Worker		TT32-TRW	$42.29	$54.80	$67.31	H H D H D D D D N
	Apprentice Rates:					
	Level 1		$23.46	$30.21	$36.96	
	Level 2		$26.11	$33.60	$41.08	
	Level 3		$28.80	$36.55	$44.31	
	Level 4		$31.10	$39.68	$48.26	
	Level 5		$33.16	$42.17	$51.17	
	Level 6		$36.34	$46.75	$57.17	
	Level 7		$37.40	$48.21	$59.03	
	Level 8		$38.21	$49.43	$60.65	

Official Request #: 1222
Requestor: TROY SCHOOL DISTRICT
Project Description: REMODELING & ADDITIONS

Project Number: PHASE 1-BOULAN PARK, LARSON & SMITH MIDDLE
County: Oakland

Official Rate Schedule

Every contractor and subcontractor shall keep posted on the construction site, in a conspicuous place, a copy of all prevailing wage and fringe benefit rates prescribed in a contract.

Official 2006 Prevailing Wage Rates for State Funded Projects

Issue Date: 11/9/2006
Contract must be awarded by 2/7/2007

Classification Name	Description		Straight Hourly	Time and a Half	Double Time	Overtime Provision
Tile						
Tile Finisher		TT32-TF	$37.19	$46.90	$56.61	H H D H D D D D N
	Apprentice Rates:					
	Level 1		$18.06	$23.11	$28.15	
	Level 2		$19.08	$24.63	$30.19	
	Level 3		$23.09	$29.32	$35.55	
	Level 4		$24.35	$31.21	$38.07	
	Level 5		$25.64	$32.71	$39.77	
	Level 6		$27.03	$34.46	$41.90	
	Level 7		$28.47	$35.95	$43.43	
	Level 8		$29.75	$37.48	$45.20	
Tile Layer		TT32-TL	$42.19	$54.65	$67.11	H H D H D D D D N
	Apprentice Rates:					
	Level 1		$23.46	$30.21	$36.96	
	Level 2		$26.11	$33.60	$41.08	
	Level 3		$28.80	$36.55	$44.31	
	Level 4		$31.10	$39.68	$48.26	
	Level 5		$33.11	$41.96	$50.82	
	Level 6		$36.29	$46.68	$57.07	
	Level 7		$36.85	$47.39	$57.93	
	Level 8		$37.66	$48.61	$59.55	
Truck Driver						
on all trucks of 8 cubic yard capacity or less		TM-RB1	$32.62	$35.55		H H H H H H H H Y
of all trucks of 8 cubic yard capacity or over		TM-RB1A	$32.72	$35.70		H H H H H H H H Y
on euclid type equipment		TM-RB1B	$32.87	$35.93		H H H H H H H H Y
Underground Laborer Open Cut, Class I						
Construction Laborer		LAUC-Z1-1	$31.39	$41.90	$52.41	H H H H H H H D Y
	Apprentice Rates:					
	0-1,000 work hours		$26.63	$34.76	$42.89	
	1,001-2,000 work hours		$27.59	$36.20	$44.81	
	2,001-3,000 work hours		$28.54	$37.63	$46.71	
	3,001-4,000 work hours		$30.44	$40.47	$50.51	

Official Request #: 1222
Requestor: TROY SCHOOL DISTRICT
Project Description: REMODELING & ADDITIONS

Project Number: PHASE 1-BOULAN PARK, LARSON & SMITH MIDDLE
County: Oakland

Official Rate Schedule

Every contractor and subcontractor shall keep posted on the construction site, in a conspicuous place, a copy of all prevailing wage and fringe benefit rates prescribed in a contract.

Classification Name / Description		Straight Hourly	Time and a Half	Double Time	Overtime Provision
Underground Laborer Open Cut, Class II					
Mortar and material mixer, concrete form man, signal man, well point man, manhole, headwall and catch basin builder, guard rail builders, headwall, seawall, breakwall, dock builder and fence erector.	LAUC-Z1-2	$31.50	$42.07	$52.63	H H H H H H H D Y
Apprentice Rates:					
0-1,000 work hours		$26.72	$34.89	$43.07	
1,001-2,000 work hours		$27.67	$36.32	$44.97	
2,001-3,000 work hours		$28.63	$37.76	$46.89	
3,001-4,000 work hours		$30.54	$40.63	$50.71	
Underground Laborer Open Cut, Class III					
Air, gasoline and electric tool operator, vibrator operator, drillers, pump man, tar kettle operator, bracers, rodder, reinforced steel or mesh man (e.g. wire mesh, steel mats, dowel bars, etc.), cement finisher, welder, pipe jacking and boring man, wagon drill and air track operator and concrete saw operator (under 40 h.p.), windlass and tugger man, and directional boring man.	LAUC-Z1-3	$31.55	$42.14	$52.73	H H H H H H H D Y
Apprentice Rates:					
0-1,000 work hours		$26.75	$34.94	$43.13	
1,001-2,000 work hours		$27.71	$36.38	$45.05	
2,001-3,000 work hours		$28.67	$37.82	$46.97	
3,001-4,000 work hours		$30.59	$40.70	$50.81	
Underground Laborer Open Cut, Class IV					
Trench or excavating grade man.	LAUC-Z1-4	$31.63	$42.26	$52.89	H H H H H H H D Y
Apprentice Rates:					
0-1,000 work hours		$26.81	$35.03	$43.25	
1,001-2,000 work hours		$27.78	$36.49	$45.19	
2,001-3,000 work hours		$28.74	$37.93	$47.11	
3,001-4,000 work hours		$30.67	$40.82	$50.97	
Underground Laborer Open Cut, Class V					
Pipe Layer	LAUC-Z1-5	$31.69	$42.35	$53.01	H H H H H H H D Y
Apprentice Rates:					
0-1,000 work hours		$26.86	$35.11	$43.35	
1,001-2,000 work hours		$27.83	$36.56	$45.29	
2,001-3,000 work hours		$28.79	$38.00	$47.21	
3,001-4,000 work hours		$30.72	$40.89	$51.07	

Official Request #: 1222
Requestor: TROY SCHOOL DISTRICT
Project Description: REMODELING & ADDITIONS

Project Number: PHASE 1-BOULAN PARK, LARSON & SMITH MIDDLE
County: Oakland

Official Rate Schedule

Every contractor and subcontractor shall keep posted on the construction site, in a conspicuous place, a copy of all prevailing wage and fringe benefit rates prescribed in a contract.

Official 2006 Prevailing Wage Rates for State Funded Projects

Issue Date: 11/9/2006
Contract must be awarded by 2/7/2007

Classification Name / Description		Straight Hourly	Time and a Half	Double Time	Overtime Provision
Underground Laborer Open Cut, Class VI					
Grouting man, top man assistant, audio visual television operations and all other operations in connection with closed circuit television inspection, pipe cleaning and pipe relining work.	LAUC-Z1-6	$29.14	$38.53	$47.91	H H H H H H H D Y
Apprentice Rates:					
0-1,000 work hours		$24.95	$32.24	$39.53	
1,001-2,000 work hours		$25.79	$33.50	$41.21	
2,001-3,000 work hours		$26.62	$34.75	$42.87	
3,001-4,000 work hours		$28.30	$37.27	$46.23	
Underground Laborer Open Cut, Class VII					
Restoration laborer, seeding, sodding, planting, cutting, mulching and topsoil grading and the restoration of property such as replacing mail boxes, wood chips, planter boxes, flagstones etc.	LAUC-Z1-7	$25.76	$33.46	$41.15	H H H H H H H D Y
Apprentice Rates:					
0-1,000 work hours		$22.41	$28.43	$34.45	
1,001-2,000 work hours		$23.08	$29.43	$35.79	
2,001-3,000 work hours		$23.75	$30.44	$37.13	
3,001-4,000 work hours		$25.09	$32.45	$39.81	

Official Request #: 1222
Requestor: TROY SCHOOL DISTRICT
Project Description: REMODELING & ADDITIONS

Project Number: PHASE 1-BOULAN PARK, LARSON & SMITH MIDDLE
County: Oakland

Official Rate Schedule

Every contractor and subcontractor shall keep posted on the construction site, in a conspicuous place, a copy of all prevailing wage and fringe benefit rates prescribed in a contract.

MICHIGAN DEPARTMENT OF LABOR & ECONOMIC GROWTH
WAGE & HOUR DIVISION

OVERTIME PROVISIONS for MICHIGAN PREVAILING WAGE RATE SCHEDULE

1. Overtime is represented as a nine character code. Each character represents a certain period of time after the first 8 hours Monday thru Friday.

	Monday thru Friday	Saturday	Sunday & Holidays
First 8 Hours		4	8
9th Hour	1	5	
10th Hour	2	6	
Over 10 hours	3	7	

Overtime for Monday thru Friday after 8 hours:
the 1st character is for time worked in the 9th hour *(8.1 - 9 hours)*
the 2nd character is for time worked in the 10th hour *(9.1 - 10 hours)*
the 3rd character is for time worked beyond the 10th hour *(10.1 and beyond)*

Overtime on Saturday:
the 4th character is for time worked in the first 8 hours on Saturday *(0 - 8 hours)*
the 5th character is for time worked in the 9th hour on Saturday *(8.1 - 9 hours)*
the 6th character is for time worked in the 10th hour *(9.1 - 10 hours)*
the 7th character is for time worked beyond the 10th hour *(10.01 and beyond)*

Overtime on Sundays & Holidays
The 8th character is for time worked on Sunday or on a holiday

The last character indicates if an optional 4-day 10-hour per day workweek can be worked without paying overtime after 8 hours worked.

2. Overtime Indicators Used in the Overtime Provision:

H - means TIME AND ONE-HALF due
X - means TIME AND ONE-HALF due after 40 HOURS worked
D - means DOUBLE PAY due
Y - means YES an optional 4-day 10-hour per day workweek can be worked without paying overtime after 8 hours worked
N - means NO an optional 4-day 10-hour per day workweek *can not* be worked without paying overtime after 8 hours worked

3. EXAMPLES:

HHHHHHHDN - This example shows that the 1½ rate must be used for time worked after 8 hours Monday thru Friday *(characters 1 - 3);* for all hours worked on Saturday, 1½ rate is due *(characters 4 - 7).* Work done on Sundays or holidays must be paid double time *(character 8).* The N *(character 9)* indicates that 4 ten-hour days is not an acceptable workweek at regular pay.

XXXHHHHDY - This example shows that the 1½ rate must be used for time worked after 40 hours are worked Monday thru Friday *(characters 1-3);* for hours worked on Saturday, 1½ rate is due *(characters 4 – 7).* Work done on Sundays or holidays must be paid double time *(character 8).* The Y *(character 9)* indicates that 4 ten-hour days is an acceptable alternative workweek.

(REV 05/07/04)

STATE OF MICHIGAN

JENNIFER M. GRANHOLM
GOVERNOR

DEPARTMENT OF LABOR & ECONOMIC GROWTH
LANSING

ROBERT W. SWANSON
DIRECTOR

REQUIREMENTS OF MICHIGAN PUBLIC ACT 166 OF 1965, PREVAILING WAGES ON STATE PROJECTS

The Michigan Department of Labor & Economic Growth determines prevailing rates pursuant to the Prevailing Wage Law, Act 166, P.A. of 1965. The purpose of establishing prevailing rates is to provide rates of pay for workers on construction projects for which the state or a school district is the contracting agent and which is financed or financially supported by the state. By law, prevailing rates are compiled from the rates contained in collectively bargained agreements which cover the locations of the state projects. The attached prevailing rates provide an hourly rate which INCLUDES wage and fringe benefit totals for designated construction mechanic classifications. The overtime rates also include wage and fringe benefit totals. Please pay special attention to the overtime and premium pay requirements. The prevailing rate may be satisfied by payment in cash or payment in cash and credit for fringe benefits paid in cash or on behalf of a worker or fringe benefits provided to a worker.

State of Michigan responsibilities under the law:

- The department establishes the prevailing rate for each classification of construction mechanic ***requested by a contracting agent*** prior to contracts being let out for bid on a state project.

Contracting agent responsibilities under the law:

- If a contract is not awarded or construction does not start within 90 days of the date of the issuance of rates, a re-determination of rates must be requested by the contracting agent.
- Rates for classifications needed but not provided on the Prevailing Rate Schedule, including rates for registered apprentices, ***must*** be obtained ***prior*** to contracts being let out for bid on a state project.
- The contracting agent, by written notice to the contractor and the sureties of the contractor known to the contracting agent, may terminate the contractor's right to proceed with that part of the contract, for which less than the prevailing rates of wages and fringe benefits have been or will be paid, and may proceed to complete the contract by separate agreement with another contractor or otherwise, and the original contractor and his sureties shall be liable to the contracting agent for any excess costs occasioned thereby.

Contractor responsibilities under the law:

- Every contractor and subcontractor shall keep posted on the construction site, in a conspicuous place, a copy of all prevailing wage and fringe benefit rates prescribed in a contract.
- Every contractor and subcontractor shall keep an accurate record showing the name and occupation of and the actual wages and benefits paid to each construction mechanic employed by him in connection with said contract. This record shall be available for reasonable inspection by the contracting agent or the department.
- Each contractor or subcontractor is separately liable for the payment of the prevailing rate to its employees.
- The prime contractor is responsible for advising all subcontractors of the requirement to pay the prevailing rate prior to commencement of work.
- The prime contractor is secondarily liable for payment of prevailing rates that are not paid by a subcontractor.
- A construction mechanic shall only be paid the apprentice rate if registered with the United States Department of Labor, Bureau of Apprenticeship and Training and the rate is included in the contract.

Enforcement:

A person who has information of an alleged prevailing wage violation on a state project may file a complaint with the Wage and Hour Division. The department will investigate and attempt to resolve the complaint informally.

Executive Order Number 2003-001 requires that contractors doing business with the State of Michigan be in compliance with state and federal law. A violation of Act 166 of 1965, as amended, the Prevailing Wages on State Projects act or Act 390 of 1978, as amended, the Payment of Wages and Fringe Benefits Act, may result in the debarment of a contractor from being awarded a contract for the provision of goods and services to the State of Michigan for a period of up to eight (8) years.

ENGINEERS - CLASSES OF EQUIPMENT LIST

UNDERGROUND ENGINEERS

CLASS I

Backfiller Tamper, Backhoe, Batch Plant Operator, Clam-Shell, Concrete Paver (2 drums or larger), Conveyor Loader (Euclid type), Crane (crawler, truck type or pile driving), Dozer, Dragline, Elevating Grader, End Loader, Gradall (and similar type machine), Grader, Power Shovel, Roller (asphalt), Scraper (self propelled or tractor drawn), Side Broom Tractor (type D-4 or larger), Slope Paver, Trencher (over 8' digging capacity), Well Drilling Rig, Mechanic, Slip Form Paver.

CLASS II

Boom Truck (power swing type boom), Crusher, Hoist, Pump (1 or more 6" discharge or larger gas or diesel powered by generator of 300 amps or more, inclusive of generator), Side Boom Tractor (smaller than type D-4 or equivalent), Sweeper (Wayne type and similar equipment), Tractor (pneu-tired, other than backhoe or front end loader), Trencher (8' digging capacity and smaller).

CLASS III

Air Compressors (600 cfm or larger), Air Compressors (2 or more less than 600 cfm), Boom Truck (non-swinging, non-powered type boom), Concrete Breaker (self-propelled or truck mounted, includes compressor), Concrete Paver (1 drum, ½ yard or larger), Elevator (other than passenger), Maintenance Man, Mechanic Helper, Pump (2 or more 4" up to 6" discharge, gas or diesel powered, excluding submersible pump), Pumpcrete Machine (and similar equipment), Wagon Drill Machine, Welding Machine or Generator (2 or more 300 amp or larger, gas or diesel powered).

CLASS IV

Boiler, Concrete Saw (40HP or over), Curing Machine (self-propelled), Farm Tractor (w/attachment), Finishing Machine (concrete), Firemen, Hydraulic Pipe Pushing Machine, Mulching Equipment, Oiler (2 or more up to 4", exclude submersible), Pumps (2 or more up to 4" discharge if used 3 hrs or more a day-gas or diesel powered, excluding submersible pumps), Roller (other than asphalt), Stump Remover, Vibrating Compaction Equipment (6' wide or over), Trencher (service).

HAZARDOUS WASTE ABATEMENT ENGINEERS

CLASS I

Backhoe, Batch Plant Operator, Clamshell, Concrete Breaker when attached to hoe, Concrete Cleaning Decontamination Machine Operator, Concrete Pump, Concrete Paver, Crusher, Dozer, Elevating Grader, Endloader, Farm Tractor (90 h.p. and higher), Gradall, Grader, Heavy Equipment Robotics Operator, Loader, Pug Mill, Pumpcrete Machines, Pump Trucks, Roller, Scraper (self-propelled or tractor drawn), Side Boom Tractor, Slip Form Paver, Slop Paver, Trencher, Ultra High Pressure Waterjet Cutting Tool System Operator, Vactors, Vacuum Blasting Machine Operator, Vertical Lifting Hoist, Vibrating Compaction Equipment (self-propelled), and Well Drilling Rig.

CLASS II

Air Compressor, Concrete Breaker when not attached to hoe, Elevator, End Dumps, Equipment Decontamination Operator, Farm Tractor (less than 90 h.p.), Forklift, Generator, Heater, Mulcher, Pigs (Portable Reagent Storage Tanks), Power Screens, Pumps (water), Stationary Compressed Air Plant, Sweeper, and Welding Machine.

Regular Crane Operators rate shall include: Mechanics, Crane Operators, Dragline Operators, Boom Truck Operators, Power Shovel Operators and Concrete Pumps with booms.

Revised: 09/07/06

SECTION 00880
REGULATORY REQUIREMENTS

PART 1 - GENERAL

1.01 RELATED DOCUMENTS

A. Attention is directed to Bidding and Contract Requirements, and to Division 1, General Requirements, which are hereby made a part of this Section.

B. Specific attention is directed to all applicable building codes, laws, regulations, permits, fees, notices, Equal Employment Opportunity, wage rates, non-segregated facilities and other statutory requirements for the Project.

1.02 STANDARDS, CODES AND REGULATION

A. All Work is to comply with the rules and regulations of governing bodies having jurisdiction.

B. Standards, codes and regulations published by Manufacturer's associations, governmental agencies and other regulatory authorities form a part of these Specifications as minimum requirements. Such references include the latest issue and legal requirements in force.

C. Where differences occur between the Contract Documents and such standards, the strictest requirements shall take precedence.

D. Supply all materials and perform all Work in accordance with the Manufacturer's specifications and installation procedures, and in conformance with published Trade and Manufacturers' association standards, unless specifically noted otherwise in the Contract Documents.

E. **Contractor** shall comply with all applicable requirements of both state and federal Laws regarding discovery, release, transportation, storage, spills, disposal or other handling of Hazardous Materials Refer to Section 00840 in the Project Manual.

1.03 PERMITS

A. Refer to Section 00890 Permits in the Project Manual.

1.04 TAXES

A. Except to the extent specifically described below, this Project is subject to all applicable state Sales Tax and/or Use taxes, and Bidder must include such taxes in its Bid Proposal. All other taxes applicable to the project at the time of the bid are to be included in the bid amount and will be the responsibility of Bidder.

END OF SECTION 00880

SECTION 00890
PERMITS

PART 1 - GENERAL

1.01 RELATED DOCUMENTS

A. Attention is directed to Bidding and Contract Requirements, and to Division 1, General Requirements, which are hereby made a part of this Section.

1.02 PERMITS AND FEES

A. Troy School District **will** obtain and pay for the General Building Permit.

B. Other than the general building permit, **Contractor** shall provide and pay for all other permits, assessments, governmental fees, bonds, connection charges, licenses and inspection fees and any other charges necessary for the proper execution and completion of the **Contractor's** Work.

C. **Contractor** is to provide, pay for and coordinate all other permits, fees, inspections, and city, county, state, federal and governing authority approvals required for the successful completion of the Work contained within its respective Bid Category and deliver required certificates of inspection and approvals to Barton Malow Company.

D. This Project is under the jurisdiction of the **MICHIGAN DEPARTMENT OF LABOR FOR MECHANICAL AND ELECTRICAL, STATE OF MICHIGAN FIRE MARSHAL DIVISION, MICHIGAN DEPARTMENT AND OAKLAND COUNTY DEPARTMENT OF PUBLIC HEALTH.**

E. Site water and sewer utilities are under the jurisdiction of the **ROAD COMMISION OF OAKLAND COUNTY** authorities.

END OF SECTION 00890

SECTION 01140
USE OF PREMISES

PART 1 - GENERAL

1.01 RELATED DOCUMENTS

A. Attention is directed to Bidding and Contract Requirements, and to Division 1, General Requirements, which are hereby made a part of this Section.

1.02 SUMMARY

A. This Section describes the following requirements including:
   1. Use of Premises and Deliveries
   2. Use of Existing Elevators
   3. Use of Existing Facilities
   4. Existing Entrances and Drives
   5. Protection of Underground Facilities
   6. No Interruption of Occupancy/Sequencing
   7. Material Storage

PART 2 - USE OF PREMISES

2.01 USE OF PREMISES AND DELIVERIES

A. Contractor and its Subordinate Parties shall be subject to such rules and regulations for the conduct of the Work as the Owner or Barton Malow Company may establish. All employees shall be properly and completely clothed while working. Bare torsos, legs and feet will not be allowed. Possession or consumption of alcoholic beverages or drugs, or other obnoxious behavior on the site is strictly prohibited. Violators shall be promptly removed from the site.

B. Before starting the Work, Contractor shall ascertain from Barton Malow Company what entrances, routes or roadways shall be used for access to the Work, and use only those designated for movement of personnel, materials and vehicles to and from the Project site. Close coordination will be required of Contractor with the Owner, Barton Malow Company, other contractors, the city and others having an interest in the Project to assure that Work on the site, access to and from the site and the general conduct of operations is maintained in a safe and efficient manner, and that disruption and inconvenience to existing streets and property is minimized. Contractor is responsible to review the site and be familiar with all existing conditions within and around the Owner's property including local conditions and requirements. A set of existing drawings, which are considered Resource Drawings, is available for inspection at the Barton Malow Company's Field Office.

C. Contractors shall maintain free access to all buildings and areas of the site for designated vehicles, service vehicles and fire fighting equipment and at no time shall block off or close roadways or fire lanes without providing auxiliary roadways and means of entrance acceptable to the Owner. Fire hydrants must remain accessible at all times. Contractors shall give the Owner and the local fire department at least forty-eight (48) hours notice of any such changes of routes.

D. There is on-site parking for Contractors and their Subordinate Parties' employees. Contractor, Subordinate Parties and their personnel will not be allowed to park in the Owner's parking area. Barton Malow Company will designate parking areas.

E. Contractors and their Subordinate Parties will not be allowed to use any Owner tools or equipment during the course of the Project.

F. Each Contractor shall confine its Work to normal working hours; 8:00 am to 4:30 p.m. OR 7:00 am to 3:30 p.m., Monday through Friday. Contractor may execute the Work during the entire twenty-four (24) hours of any day of the week with the approval of the Barton Malow Company and the Owner, providing that they so conduct their operations as to not create a public nuisance or disturb the peace, and provided such operations are conducted so as to comply with all applicable laws, ordinances, and regulations. Compensation to Barton Malow Company for supervisory staff due to abnormal working hours will at the requesting Contractor's expense.

1. The City of Troy has a noise ordinance which states: **The erection (including excavating), demolition, alteration, or repair of any building, the excavation and/or grading of streets, highways, or private property other than between the hours of 7:00am and 8:00pm on Mondays through Saturdays, unless a permit be first obtained from the Building Department for building work or from the Engineering Department for street work** (Title IX – Police Regulations).
2. **The Troy School District has stated that no construction traffic is allowed to or from the schools between the hours of 8:00am-8:45am and 3:15pm-4:00pm. This is to ensure the safety of their students.**

G. Whenever Contractor intends to depart from normal work hours, it shall notify Barton Malow Company in writing at least forty-eight (48) hours in advance. Failure of Contractor to give such timely notice may result in Barton Malow Company directing the removal or uncovering of the Work performed during such abnormal hours and Contractor's expense. Special arrangements can be made for emergency work or shutdowns as may be required.

H. Use of explosives are not permitted.

I. Each Contractor on behalf of itself and its Subordinate Parties shall be responsible for all damage to the Project including the existing buildings and grounds arising or resulting from its operations under the Agreement. Repair or replacement of damaged items shall be to the satisfaction of the Owner and Barton Malow Company.

J. Each Contractor shall at all times maintain a clean and safe passageway for the Owner's operations and personnel in existing areas and maintain clearances adjacent to and in connection with the Work performed.

K. Each Contractor shall effectively confine dust, dirt and noise to the actual construction area and in compliance with all applicable laws, rules and regulations.

L. All Contractors and their Subordinate Parties shall restrict all Work activities associated with an area undergoing renovation to within the boundaries indicated by the Contract Documents. Any means of access or egress from the stipulated boundaries shall be coordinated with Barton Malow Company and the Owner.

M. Work shall, if required, be constructed in phases to accommodate the Owner's use of the premises during construction and to accommodate installation of equipment. Refer to Section 00230 Schedule and Phasing of the Project Manual.

N. All Contractors shall limit their use of the premises for Work and for storage, to allow for:

* Work by other contractors
* Owner occupancy
* Public use and safety
* Free use of corridors at all times

O. The Owner and Barton Malow Company expect Contractors and their Subordinate Parties to exercise common sense and good judgment, and to conduct themselves in a manner which would be a credit to the

Owner. Without limiting other applicable provisions of the Contract Documents, Contractor shall not engage in the following:

1. Conduct that interferes with Work or work of others.
2. Conduct that interferes with, or is detrimental to good safety and well being.
3. Unauthorized use of confidential information.
4. Discourtesy toward Owner's staff, visitors and the general public (including abusive, vulgar or other language).
5. Soliciting.
6. Disregard of safety, sanitation, or security laws, rules and regulations.
7. Conduct detrimental to the Owner's operations and good reputation.
8. Stealing.
9. Gambling.
10. Possession and/or use of narcotics or intoxicants.
11. Threats or abuse of others.
12. Disorderly conduct or fighting.
13. Playing of loud music.
14. Falsification of information.
15. Unauthorized travel of Subcontractor's employees outside the designated project Work areas.
16. Discriminating Behavior.
17. Sexual of Ethnic harassment.

Willful disregard of the above will be grounds for requiring the offending person(s) to be removed from the Project, and may subject the Contractor to termination under the Agreement.

P. Site contractor shall be responsible for keeping the designated route to the site clean and free of debris. Site contractor will assume responsibility for any of their sub-contractors keeping the designated route to the site clean and free of debris.

P. Each Contractor on behalf of itself and its Subordinate Parties shall not load or permit any part of a structure to be loaded with a weight that will endanger its safety.

Q. Where new temporary partitions are established and located by the Demolition, Carpentry, or Drywall contractor, all existing mechanical, fire protection, plumbing and electrical devices used for life safety purposes shall be relocated by the Contractor installing or relocating same to the new temporary partitions so as to be usable and visible to Owner personnel and activities. Items such as, but not limited to: exit lights, fire protection systems, fire alarm systems, and similar items shall be relocated. In the event that a passageway is blocked or barricaded, visible rerouting directions for traffic flow shall be posted.

1. The Project is under the jurisdiction of the Michigan Department of Labor and Economic Growth.

2. Partition construction shall provide a fire-resistant classification approved by the state Fire Marshall. Openings in such partitions shall be protected by fire doors consistent with the rating of the partition.

R. The Owner shall have the option to curtail or delay any activity that affects its operations. Should a Contractor be asked to stop its Work, the Contractor shall do so immediately and proceed with other activities with no additional cost to the Owner or Barton Malow Company. The Owner may occupy the premises during the entire period of construction for the conduct of its normal operations. All Contractors are to cooperate with the Owner and Barton Malow Company in all construction operations to minimize conflict, and to facilitate Owner usage.

S. Contractors and their Subordinate Parties are prohibited from canvassing, soliciting, posting, or distributing literature or materials for any purpose while on the job site.

T. Contractors and their Subordinate Parties shall be responsible for adhering to the smoking policies and regulations of the Owner and the Owner's facilities.

U. The preservation of existing trees and other vegetation on the site to the maximum extent possible is extremely important. In many cases, trees in close proximity to the site work are to be preserved. Each Contractor must plan its Work and instruct its Subordinate Parties to conduct their operations to avoid damage to trees and vegetation (provide barriers as required). Indiscriminate driving about the site, disposing of waste, storage of materials upon or against trees or any other activity which is harmful to trees or vegetation that are to be preserved will not be tolerated. Parking areas, storage areas, and access to the buildings will be confined to areas designated and approved by Barton Malow Company.

V. Any case of damage to any tree shall be reported to Barton Malow Company immediately so that professional repairs can be made. The cost of such required repairs or treatment shall be charged to the responsible Contractor. Willful disregard of the above will be grounds for requiring the offending person(s) to be removed from the Project, and may subject the Contractor to termination under the Agreement.

2.02 .. USE OF EXISTING ELEVATORS

A. Each Contractor, subject to the approval of Barton Malow Company and Owner may not, use the existing elevator(s) designated by the Owner within the contract boundaries for movement of personnel and materials to a construction area.

B. In those cases where an elevator is to be shared with Owner services, the Owner's employees and services take priority over construction activities. Each Contractor is responsible for proper conduct of its Subordinate Parties with regard to the use of the elevator. Any damage to the elevator due to oversize load, excess weight or other conditions is the individual Contractor's responsibility.

C. Use of the elevator(s) at times other than normal working hours shall be coordinated with Barton Malow Company and Owner.

2.03 USE OF EXISTING FACILITIES

A. Contractors shall limit their and their Subordinate Parties' usage of the occupied areas of the facility to that which is absolutely necessary for the installation of their Work. Parts of the facility not in the construction area are "off limits" unless a specific work task is being performed as designated by Barton Malow Company.

B. Contractors and their Subordinate Parties will not be allowed the use of the Owner's cafeteria, parking, telephones, toilet facilities, tools, equipment, or any other item or facility belonging to the Owner, unless specifically authorized by Owner and Barton Malow Company. Contractor's Subordinate Parties shall not use the Owner's facilities for personal use such as lunchrooms and similar areas for coffee breaks, clothing changes or similar uses. The Owner's complex shall be off-limits to all construction personnel without prior approval of Barton Malow Company and the Owner.

2.04 EXISTING ENTRANCES AND DRIVES

A. Contractor and construction delivery access to the worksite shall be as designated by Barton Malow Company. Selected entrances to the Project site will remain open during normal working hours for the use of all Contractors. Contractors shall utilize specific entrances for material deliveries, equipment deliveries and worker access to the Project site as directed by Barton Malow Company.

B. At no time are ANY vehicles to be parked, whether attended or not, in the Owner's entrances or drives. Any material delivery which will tie up the Owner's entrances or drives in excess of 15 minutes shall be pre-scheduled with the Owner through Barton Malow Company. In scheduling construction deliveries the Contractor agrees that the Owner's deliveries, and operations will take precedence.

2.05 PROTECTION OF UNDERGROUND FACILITIES

A. Each Contractor shall provide and maintain proper shoring and bracing for existing underground utilities, sewers, and building foundations, encountered during its excavation Work, to protect from collapse or movement, or other type of damage until such time as they are to be removed, incorporated into the new Work or can be properly backfilled upon completion of new Work. All such disruptions of services shall be limited to a maximum of FOUR (4) hours. Prior to beginning any excavation, Contractor shall contact MISS DIG and utility companies for the location of all existing underground services and provide, if requested, documentation of such contact to Barton Malow Company. If necessary, Contractor shall pay for appropriate layout and locating of existing utilities.

B. Utilities and/or other services which are shown, or not shown but encountered, shall be protected by the Contractor from any damage arising or resulting from Work, unless or until they are abandoned. If the utilities or services are damaged from Contractor's Work Contractor shall immediately repair any damage and restore the utilities and services to an equal or better condition than that which existed prior to the damage. Contractor will be responsible for all liabilities, expenses, lawsuits or claims arising or resulting from such damage and will defend, hold harmless and indemnify Owner and Barton Malow Company from any claims or lawsuits or other expenses.

C. Each Contractor on behalf of itself and its Subordinate Parties shall be responsible for all damage to the Project including the existing building and grounds arising out of or resulting from their performance of the Work. Repair or replacement of damaged items shall be to the satisfaction of the Owner and Barton Malow Company.

2.06 NO INTERRUPTION OF OCCUPANCY/SEQUENCING

A. Each Contractor is responsible to plan, coordinate and execute its Work in such a manner that there will be no disruption of the Owner's operations. If an interruption of operations is unavoidable, then this Work will be scheduled with the Owner through the Barton Malow Company prior to beginning such Work.

B. Due to the nature of the Owner's existing areas, the sequence of Work must be scheduled and coordinated with the Owner's ongoing operations to minimize disruptions and/or disturbances to the Owner's Work and at all times remain as secondary to the Owner's operations. Each segment of the Work shall be coordinated with the Barton Malow Company and the Owner prior to proceeding.

C. Work that interrupts the Owner's services will be accomplished during the time periods when it is least inconvenient to the Owner and completed in the shortest possible time frame. Contractors may be requested to work split shifts, weekends, off peak Owner loading periods, etc., to accommodate Owner's utility and service requirements, such as, but not limited to, medical gas systems, electrical power, HVAC systems, storm and sanitary lines. The cost for premium time labor, which may be required, is the Contractor's responsibility and is to be included in the base bid.

D. Contractors are responsible to provide any temporary alternate supply and/or return conditions to maintain services to the facility while Work is being performed for each Bid Category. Place safety stages or markers to indicate location of disconnected services.

E. No interruptions to Owner's power, lighting, signal, or alarm circuits will be permitted without the express written permission of the Owner. Arrangements for interruptions shall be made with the Owner at least forty-eight (48) hours prior to the interruption and shall be made at such time and duration as authorized by them. Temporary feeders, transformer jumpers, connections, circuits, etc., shall be used as required to accomplish the above at no additional cost to the Owner and Barton Malow Company.

F. Contractors shall construct the Work in stages to provide for public convenience. Contractors shall not close off public use of facilities until completion of one stage of construction will provide alternative usage, or until other means have been provided.

G. These provisions shall apply to all Contractors and are applicable whether a Contractor is either directly or indirectly affected.

2.07 MATERIAL STORAGE

A. Each Contractor shall provide suitable storage trailers on site as required. These are to be relocated and removed when directed by Barton Malow Company.

B. Temporary storage of materials in the building and on the site will be limited to the same areas immediately under construction for materials intended for that particular portion of the Work. Material, equipment and tools shall not be stored on site in excess of five (5) working days prior to installation or use without Barton Malow Company's approval. Contractors shall stock the job with sufficient materials to maintain progress and schedule and without interfering with the Work or storage of others. Each Contractor assumes full responsibility for the protection and safekeeping of products under its control which are stored on the site. Contractors must move any stored products, under their control, which interfere with operations of the Owner or separate contractors as directed by Barton Malow Company. All Contractors are to cooperate with Barton Malow Company and other contractors in this regard.

C. Each Contractor shall provide sufficient protection for its materials and equipment from damages by weather or construction work or other hazards.

D. During progress of Work and upon completion of the Work, Contractor shall remove all debris and leave the area in a clean and orderly condition.

E. Each Contractor shall submit a receipt of shipment for all equipment stored on site or off-site to the Barton Malow Company. No materials or equipment shall be removed from the site without the permission of Barton Malow Company.

F. Storage of combustible materials within or adjacent to the building is prohibited.

END OF SECTION 01140

SECTION 01210
ALLOWANCES

The following is a list of the allowances for the Troy School District Phase I – Three Middle Schools Remodeling & Addition (Boulan Park, Larson & Smith) BP #9361 project, as taken from the work scopes (section 00220).

WORK SCOPE SECTION	DESCRIPTION	AMOUNT
2.1 - Sitework	Maintenance of stone paths at Smith Middle School, to be used at Barton Malow's discretion.	$15,000
3.1 - Concrete	-	N/A
4.1 – Masonry	To be used as directed by Barton Malow.	$3,000
5.1 – Structural Steel	To be used for miscellaneous steel as directed by BMC.	$1,000
6.1 – Carpentry and Acoustical Ceilings	To be used on a time and material basis as directed by BMC.	$6,000
7.1 – Roofing	-	N/A
8.1 – Glazing & Metal Wall Panels	-	N/A
9.1 – Painting	To cover the cost of touch-up painting needed following owner move in, or as directed by BMC.	$3,000
9.2 – Ceramic Tile	To be used at Barton Malow's discretion.	$2,000
9.3 – Carpet, Resilient Tile and Base	To be used as directed by BMC.	$4,000
12.1 – Telescoping Stands	-	N/A
12.2 – Gym Equipment	-	N/A
15.1 – Mechanical	-	N/A
15.2 – Temperature and Lighting Controls	-	N/A
15.3 - Mechanical Testing and Balancing	-	N/A
16.1 – Electrical	To be used at Barton Malow's discretion.	$200,000

END OF SECTION 01210

SECTION 01250
CHANGES IN THE WORK

PART 1 - GENERAL

1.01 RELATED DOCUMENTS

A. Attention is directed to, Bidding and Contract Requirements, and to Division 1, General Requirements, which are hereby made a part of this Section.

B. Various forms of field communications will be used to document communication between the **Contractor** and Barton Malow Company as described in Section 01320 Communications. Field Communications are interpreted to be within the scope of the Agreement and as such are not authorizations for Work beyond the scope of the Agreement.

1.02 SUMMARY

A. This section identifies an effective method of identification of changed work and provides an efficient method of modification of Contract Documents.

B. This section describes the following requirements including:
1. Types of Change Documentation
2. Compensation of Overhead and Profit for Changes in the Work
3. Itemization of Cost of Changed Work

PART 2 - TYPES OF CHANGE DOCUMENTATION

2.01 ARCHITECT INSTRUCTIONS

A. There are two forms of Architect Instructions used on the Project, namely the Architect's Supplemental Instruction ("ASI"), AIA Document G710, and the Proposal Request ("PR"), AIA Document G709. These documents will be issued by the Architect and distributed by the Barton Malow Company to affected Contractors.

1. ASI's are used by the Architect to issue supplemental instructions or interpretations involving minor changes in the Work that will not affect the contract price or schedule.

2. PRs, often termed "Bulletins" are used by the Architect to identify changes in the Contract Documents which may affect the Contractor's contract price or schedule. An itemized write-up narrative and corresponding "bubbled" change on the drawings or specifications usually accompanies this document.

B. PRs or "Bulletins" sent to Contractors which may involve a change in the contract price or schedule will be accompanied by –the Barton Malow form entitled "PCO- Quotation Only". In the event that the timing does not allow the For Quote Only process, then Barton Malow Company will issue its form entitled "PCO - Notice to Proceed" to the Contractor.

2.02 PCO- NOTICE TO PROCEED AND FOR PCO- QUOTATION ONLY FORMS

A. A PCO- Notice to Proceed is used when Work must be performed with swiftness and authorization to proceed by Change Order is inappropriate due to time restrictions. A PCO-Notice to Proceed may be issued for changes in schedule or contract price. In order for a PCO- Notice to Proceed to be valid, it must be signed by Barton Malow Company and Owner. The terms for establishing the additional cost and processing of the PCO- Notice to Proceed into a Change Order shall be identified prior to its release by Barton Malow Company.

B. If a change issued by the Architect, through Barton Malow Company, may result in an additional cost to the Contractor, Barton Malow Company will issue a PCO- Quotation Only with the Architect's documents. The PCO- Quotation Only will describe the change or reference the appropriate documents and will have attached the detailed descriptions, sketches and plans required for the Contractor to quote the change.

C. Barton Malow Company will send the PCO– Quotation Only to all potentially affected Contractors.

D. Once the Contractor receives the PCO– Quotation Only or the PCO- Notice to Proceed, it shall prepare a detailed cost estimate for the change. This estimate shall include an itemized takeoff of labor, equipment and material with a unit cost for each item. Under no circumstances will a PCO- Quotation Only or a PCO- Notice to Proceed be processed unless accompanied by a complete cost breakdown. The PCO- Quotation Only must be returned no later than the date indicated on the PCO– Quotation Only or at the direction of Barton Malow Company.

E. Once completed, the Contractor shall sign and date the PCO- Quotation Only and submit it with proper backup to Barton Malow Company. Barton Malow Company will then review, evaluate, possibly negotiate and then when acceptable, process the PCO- Quotation Only through the Owner's Representative and Architect's Representative. Once the quote for the work under the PCO- Notice to Proceed is submitted to Barton Malow Company, it will review, evaluate, possibly negotiate, and then, when acceptable, process the resulting Change Order through Owner's Representative and Architect's Representative.

F. The PCO- Quotation Only is a document used for processing Contractor's quotations and is not a Change Order. Therefore, completion of the PCO- Quotation Only does **not** release the Work to begin.

G. PCO- Quotation Only and the PCO- Notice to Proceed will precede a Change Order. Contractors shall receive an approved PCO- Notice to Proceed or an executed Change Order before starting Work. Any changed Work performed by Contractor without a properly executed PCO- Notice to Proceed or a properly executed Change Order is at Contractor's sole risk and expense. BILLINGS AGAINST CHANGES WILL NOT BE ACCEPTED AFTER A PCO- NOTICE TO PROCEED OR FOR QUOTE ONLY IS ISSUED, BUT ONLY AFTER A CHANGE ORDER HAS BEEN PROCESSED AND SIGNED BY ALL PARTIES.

2.04 CHANGE ORDER

A. Change Orders will be written and issued by Barton Malow Company. Barton Malow Company will first issue the Change Order to the Contractor for signature. The Change Order will then be returned to Barton Malow Company. Once all appropriate signatures are secured, an executed copy will be sent to the Contractor.

B. Once the Change Order has been processed and signed by all parties, the Contractor. may invoice for payment on the completed portion of Work.

C. Agreement on any Change Order, shall constitute a final settlement of all matters relating to the changed Work that is the subject of the Change Order, including, but not limited to, all direct and indirect costs associated with such change, any impact such change may have on the unchanged Work, including but not limited to claims for acceleration, stacking, inefficiency, ripple effect, disruption, compression, interference, delay and cumulative impact, and any and all adjustments to the contract price and the schedule.

PART 3 - COMPENSATION OF OVERHEAD AND PROFIT FOR CHANGES IN THE WORK

3.01 CONTRACTOR'S OVERHEAD AND PROFIT

A. When changed Work is performed by a Contractor itself and not by its Subordinate Party, the Contractor's charge for overhead and profit shall in no event exceed fifteen percent (15%) of the approved cost of the changed Work. When changed Work is performed by a Contractor's Subordinate Party, the Contractor's charge for overhead and profit shall in no event exceed five percent (5%) of the approved cost of the changed Work.

B. When changed Work is performed by the Contractor's Subordinate Party, the Subordinate Party's charge for overhead and profit shall in no event exceed fifteen percent (15%) of the approved cost of the changed Work when such Work does not involve the Subordinate Party's subcontractors; or five percent (5%) of the approved cost of the changed Work when such changed Work is performed by the Subordinate Party's subcontractors.

C. Contractor and Subordinate Party overhead and profit shall include cost (at the Project Site, home office and otherwise) of supervision, telephone, travel, copying, administrative services, office, power, light, tools, jobsite vehicles, and all other general expenses including bond premiums. In no event shall these be charged as cost of the Changed Work.

PART 4 - ITEMIZATION OF COST OF CHANGED WORK

4.01 CORRELATION WITH CONTRACTOR'S SUBMITTALS

A. **Contractors** shall revise the Schedule of Values and Request for Payment forms to record each Change Order as a separate item of Work, and to record the adjusted contract price.

B. **Contractors** shall revise the Construction Schedule to reflect each change in Contract Time approved by a Change Order.

1. **Contractor's** shall revise sub-schedules to show changes for other items of Work affected by the changes.

C. Upon completion of Work under a Change Order, enter pertinent changes in Record Documents (Refer to Section 01720 – Project Record Documents).

4.02 COST OF THE CHANGED WORK

A. The "Cost of the Changed Work" shall be approved by the Barton Malow Company and shall mean the costs necessarily incurred by the **Contractor** in the proper performance of the Changed Work Such rates shall not be higher than those customarily paid at the place of the Project. The Cost of the Changed Work shall only include those items set forth below.

WAGES OF LABOR	Wages of construction workers directly employed by **Contractor** to perform the construction of the changed Work at the site
PAYROLL MARKUP	The amount approved by Barton Malow Company and Owner which covers the costs paid by the **Contractor** for taxes, insurance, contributions, assessments, and benefits required by law or collective bargaining agreements and for personnel not covered by such agreements, customary benefits such as sick leave, medical and health benefits, holidays vacations and pensions, provided that such costs are based on the wages and salaries

	of labor performing the changed Work.
COST OF EQUIPMENT, MATERIALS, AND SUPPLIES	Costs of materials, equipment and supplies to be incorporated into the changed Work less all savings, discounts, rebates and credits accruing to the **Contractor**.
RENTAL CHARGES FOR EQUIPMENT NOT OWNED BY CONTRACTOR	Rental charges for equipment not owned by **Contractor** that is necessary for completion of the Changed Work. Rates and quantities rented must be approved in advance by Barton Malow Company.
TAXES	Sales or use taxes imposed by a governmental authority which are directly attributed to the changed Work and for which the **Contractor** is liable.
SUBCONTRACTOR COSTS	Payments made to the Subcontractors for proper execution of Changed Work, subject to the limits set forth in Subparagraph 3.01 B. above for overhead and profit.

B. In no event shall the Cost of Changed Work include:

1. Salaries or wages of persons other than those directly performing the changed Work, including **Contractor's** personnel stationed at the principal office;

2. Expenses of the **Contractor's** principal office and offices other than the site office, except as provided in section 3.01 A. above;

3. Overhead and general expenses of any nature, except as set forth in sections 3.01 A and 3.01 B.;

4. Capital expenses of **Contractor**, including interest on the **Contractor's** capital employed for the Changed Work;

5. Rental costs for machinery or equipment, except as allowed under section 4.02 A above, or tools of any kind, unless specifically identified and approved in advance in writing by Barton Malow Company;

6. Costs due to the negligence or failure to perform of the **Contractor** or its Subordinate Parties;

7. Costs designated in section 3.01 C as being included in Overhead and Profit; or

8. Any cost not specifically described under section 4.02 A above, or otherwise approved in advance and in writing by Barton Malow Company and Owner.

4.03 QUOTATION FORMAT

Based on the above, the following formula will be utilized by all of the Contractors.

Number of PCO - Quotation Only, F.O _____
Date of PCO - Quotation Only, F. O. _____
Description of Change _____

Cost of Changed Work				
Labor:				
Carpenter	(No. of Hrs. x Rate)	xxx.xx		
Labor	(No. of Hrs. x Rate)	xxx.xx		
Ironworker	(No. of Hrs. x Rate)	xxx.xx		
		xxx.xx	xxx.xx	
Mark-up on labor @ ____%		xxx.xx		
Equipment, Materials, Supplies:				
Ace Hardware xxx.xx				
Acme Products xxx.xx				
Concrete Supplier		xxx.xx		
		xxx.xx		
	Subtotal		xxx.xx	
	OH&P @ **[15]** %		xxx.xx	
	Subtotal (1)			xxx.xx
Subcontractor Costs				
ABC Welding xxx.xx				
XYZ Resteel		xxx.xx		
		xxx.xx		
Overhead Cost @ **[5]** %		xxx.xx		
	Subtotal (2)			xxx.xx
TOTAL QUOTATION AMOUNT				
Work by Own Forces		xxx.xx (1)		
Work by Subcontractors		xxx.xx (2)		
	Total Quotation	xxx.xx		

Contractor/Subcontractors are to provide backup and breakdown documentation of all work items and costs to the satisfaction of Barton Malow Company so that it may accurately approve and recommend payment of same to Owner.

END OF SECTION 01250

SECTION 01290
PAYMENT PROCEDURES

PART 1 - GENERAL

1.01 RELATED DOCUMENTS

A. Attention is directed to Bidding and Contract Requirements, and to Division 1, General Requirements, which are hereby made a part of this Section.

1.02 SUMMARY

A. This Section describes the following requirements including:
   1. Schedule of Values
   2. Application for Payment Process
   3. Reduction of Retention
   4. Payment for Materials Stored Off-site
   5. Waivers of Lien and Sworn Statements

PART 2 - PAYMENT PROCEDURES

2.01 SCHEDULE OF VALUES

A. Once the Agreement is awarded, each Contractor must submit a Schedule of Values for its entire Work to Barton Malow Company for approval. This Schedule of Values must be submitted either within fifteen (15) days of award or fifteen (15) days prior to the first payment application deadline (per the Application for Payment Schedule), whichever comes first. The Schedule of Values must include labor and material line items for each portion of the Work (larger portions of Work such as concrete, curtainwall, drywall, mechanical, and electrical shall be broken down by elevation, floor, and areas appropriate), the Contractor shall separate bond costs, and general conditions line items as appropriate.

B. The Schedule of Values will be submitted in a format as prescribed by, and to the level of detail specified by, Barton Malow Company.

   1. The sum of the parts of the Schedule of Values shall equal the contract price.

   2. The minimum level of breakdown and order on the application for payment will be:
      a. Bond costs, if applicable
      b. General conditions line item(s)
      c. Division 1 cost breakdown as required
      d. Costs associated with preparation of closeout paperwork and documentation
      e. Major portions of the Work shall be broken down into labor and material line items for specific areas of the facility

   3. Schedule of Values items shall have a direct and understandable relation to the Project master construction schedule.

   4. Overhead and profit shall be listed as a separate line item on the schedule of values.

C. The Schedule of Values, unless objected to by Barton Malow Company, Owner or Architect, shall be the basis for the Contractor's application for payments.

D. Barton Malow Company shall have the right to require the Contractor to alter the value or add/delete categories listed on the Schedule of Values at any time for the following reasons:

   1. The Schedule of Values appears to be incorrect or unbalanced.

2. A revision of the Schedule of Values is required due to the Contractor revising the sequence of construction or assembly of building components that in turn invalidates the Schedule of Values.

3. Change Orders are issued to the Contractor and shall be incorporated into the Schedule of Values as a separate line item at the bottom of the Schedule of Values.

E. The Contractor is required to correlate the documentation for payment of stored materials requested in the application for payment against the agreed upon breakdown of the Schedule of Values as described in Part 3 Payment for Stored Materials. Barton Malow Company reserves the right to not process the application for payment if this correlation has not been submitted in conjunction with the application.

2.02 APPLICATION FOR PAYMENT PROCESS

20TH OF MONTH - ROUGH DRAFTS DUE
25TH OF MONTH - FINAL APPLICATION CUT-OFF DATE

A. Step 1 JOB-SITE INSPECTION - DRAFT PAYMENT REQUEST

On or before the twentieth (20th) of the month, according to Barton Malow Company's Application for Payment Schedule, the Contractor shall have a representative visit the Project site. The Contractor's representative will walk the Project site with Barton Malow Company's representative. The Contractor is to invoice for Work from the twentieth (20th) of last month to the twentieth (20th) of the present month. The Contractor shall submit during the review, the itemized rough draft of the Application and Certificate for Payment (AIA Documents G702 and G703 Continuation Sheet) identifying the Work completed, if any, during the current calendar month; shall review same with Barton Malow Company and obtain a preliminary approved copy of the draft for official submission (See Step 2). Contractor's pay application shall only reflect Work completed through the date of submission. In no event will payments be authorized for forecasted Work. If the walk through occurs before the last day of the payment cycle, Barton Malow Company shall determine, in its sole discretion, the amount Contractor may invoice, if any, for Work scheduled to be in place by the last day of the payment cycle.

NOTE: No payment shall be issued to a Contractor for materials stored off-site unless supported by proper documentation as required by Barton Malow Company (upon advance notification of such requests only) as described in Part 3 Payment for Stored Materials.

Step 2 PAYMENT REQUEST PREPARATION/SUBMISSION

With the information agreed upon in Step 1, the Contractor will prepare a formal application for payment request. Four (4) originals of the request and four (4) originals of the sworn statements (see Part 4) must be submitted to Barton Malow Company's Site office on or before the twenty-fifth (25th) of the month, or as scheduled (see Section 01600 Application for Payment Schedule). Late or incomplete application packets will not be accepted. The payment request will be made on an Application and Certificate For Payment form (AIA documents G702 and G703). Copies of these forms are included in Section 01600 Forms. Before submitting these documents to Barton Malow Company, each request for payment must be signed by a duly authorized agent of the Contractor and notarized. The Contractor must include with each request for progress payment a waiver of lien for all previous payments, Contractor's sworn statement and any necessary backup data as described in Part 4, Waivers of Lien and Sworn Statements. In addition, at submission of the final pay application Contractor shall provide unconditional final waivers of lien for all Subordinate Parties, as well as all documentation required under Section 01700 of the Project Manual – Contract Closeout and all additional back up data described in Part 4, Waivers of Lien and Sworn Statements. In requests for payment which follow the execution of a Change Order in excess of twenty-five percent

(25%) of the Agreement price, Contractor must present a bond rider evidencing that the penal sum of any required payment and performance bonds have been increased to one hundred percent (100%) of the adjusted Agreement price, or such other percentage as set forth in Section 00200 of the Project Manual, Instructions to Bidders. Submission of the required back-up data is a condition precedent to payment.

Step 3 CHECK DISTRIBUTION

A. Barton Malow will issue individual checks to each Contractor. The Contractor will receive the waiver of lien and will be required to sign the waiver before receipt of the check each month (see Part 4).

B. The Contractor shall provide all supporting documentation substantiating the Contractor's right to payment as the Owner, Barton Malow Company and the Architect may require.

2.03 REDUCTION OF RETENTION

A. Barton Malow Company shall be entitled to withhold ten (10%) percent of each payment due to a Contractor until Substantial Completion of the Contractor's Work. When fifty (50%) percent of the value of the Work has been satisfactorily completed, the Contractor may submit a written request to Barton Malow Company that no additional retainage be held throughout the balance of the Agreement. Barton Malow Company may grant or deny the request in its sole discretion, based upon its opinion of the progress and performance of the Contractor through the date of the request. If the request is granted and the Contractor's Work subsequently fails to meet contracted requirements, does not conform to Contract, or the Contractor does not meet its schedule commitments, the ten (10%) percent retainage shall be reinstated.

B. The Contractor, when requesting a reduction of retention, shall submit to Barton Malow Company, an AIA G707, Consent of Surety to Reduction In or Partial Release of Retention form in Section 01600 Forms.

C. Within thirty (30) days after Certificate of Substantial Completion has been issued for all portions of its Work, the Contractor's retention may be reduced to a sum as Barton Malow Company may determine is suitable to protect Barton Malow Company and the Owner for all incomplete Work and any unsettled claims.

D. Notwithstanding the foregoing, payment of retention shall be subject to all other conditions precedent that apply to payment as set forth in the Contract Documents.

PART 3 - PAYMENT FOR MATERIALS STORED OFF-SITE

3.01 PAYMENT FOR MATERIALS STORED OFF-SITE

A. The Contractor, if intending to use an off-site storage area or facility for stored materials, shall submit a written request to the Barton Malow Company and obtain approval prior to submitting the first application for payment as described in Part 2 Applications for Payment.

B. Payments will be made for materials properly stored off site. Properly stored shall mean in an insured warehouse with the Owner and Barton Malow Company being named as insureds, and all material identified as property of the Owner. The Contractor is responsible for all associated off site storage costs, transportation, insurance, including insurance coverage for stored material, while in transit, unless Contractor obtains written documentation that the material is covered during transit under a Builder's Risk Policy applicable to the Project. Contractor shall provide Barton Malow Company and the Owner verification in writing for all material so stored. Such materials shall be protected from diversion, destruction, theft, and damage to the satisfaction of Barton Malow Company, Owner and the Lender (if any), specifically marked for use on the Project, and segregated from other materials at the storage facility. The Contractor bears all risk of loss to materials and equipment stored off site.

C. Contractors are to provide supporting documentation in the form of invoices, insurance policies, and any other pertinent documentation as requested by Barton Malow Company or Owner for items the items stored off-site. Documentation shall include the following:

1) Detailed description of the material including quantities that will serve as a material description for the billing and as information to file a claim with an insurance company.

a) Stored Materials - Each item must be identified as to manufacturer, model number, and serial number, if applicable, or other identifiers should be listed for each item. Each listing must be accompanied by invoices, shipping tickets, consent of surety, and any other applicable supporting documentation.

b) Stored Manufactured Building Materials - Each item must be identified as to type, manufacturer's number or designation, and should also list the number of cartons and the contents therein storage. Each listing must also be accompanied by supporting documents including all invoices, shipping tickets and consent of surety.

c) Stored Fabricated Materials - A listing specifying the number of pieces, items, and marks as may be applicable to the particular type of items. Photographs should accompany the request.

2) Individual itemized costs of materials and the total cost value, which shall not exceed the Contractor's subcontractor or material supplier cost. The total cost value shall be supported by the Contractor's subcontractor or material supplier invoices for the stored material.

3) Estimated cost value for those materials that are fabricated by the Contractor's subcontractor or material supplier.

4) The location where the material is physically stored, including the warehouse address and storage location within the warehouse, such as bin number, aisle number or other designation. All material shall be segregated and marked.

5) Copies of the insurance policies that cover the stored materials and that names Barton Malow Company and the Owner as insureds. The limit of the insurance policy shall be equal to or greater than the replacement value of the stored materials.

D. When Applications for Payment include products stored off the Project Site or stored on the Project Site but not incorporated in the Project, for which no previous payment has been requested, a complete description of such product shall be attached to the application.

E. Contractor shall submit a certificate of title listing the Owner's and Barton Malow Company's ownership in the off-site stored materials equal to the amount paid effective at the time funds are delivered.

F. If the size, quantity, and/or type of material or product is such that a bonded warehouse is deemed unsuitable, then, with Barton Malow Company's approval, the Contractor may elect to pre-pay its subcontractor or supplier for certain material and products which are to remain on and be stored on that subcontractor/supplier's premises until needed by the Project. In such event, the Contractor shall enter into a security agreement with the subcontractor/supplier under which the Contractor shall be granted a security interest in and to all such material and products fabricated and/or to be supplied by the subcontractor/supplier for this Project and stored on the subcontractor/supplier's premises. This Security Agreement shall be a part of the financing statement, which shall be presented to a filing officer for filing pursuant to the Uniform Commercial Code. All expenses incurred in obtaining this security agreement shall be at Contractor's sole cost and expenses, and shall not accrue to the Owner, Barton Malow Company, Architect, nor the Project. A copy of each and every security agreement shall be filed with Barton Malow Company with the first Application for Payment which requests payment for such material or products.

G. All payment requests for off-site stored materials must be accompanied using the "Payment Request for Stored Materials" and a "Subcontractor Affidavit for Stored Materials" form in Section 01600 Forms. Payment requests for stored materials not complying with the foregoing requirements will not be approved. Contractors are to notify the Barton Malow Company in ample time to conduct verification procedures.

H. Contractors may not apply the cost of materials stored off-site towards a reduction in the retention amount.

I. Representatives of Barton Malow Company, Owner and the Lender (if applicable) shall have the right to make inspections of the storage areas at any time.

PART 4 - WAIVERS OF LIEN AND SWORN STATEMENTS

4.01 WAIVERS OF LIEN

A. The Contractor's first Application for Payment (see Part 2 Applications for Payment) will be based upon 100 percent of the value of Work installed. The first payment, amounting up to 90 percent of application, will be made to the Contractor without supporting documentation. Subsequent Applications for Payment must be accompanied by lien waivers from the Contractor, its Subordinate Parties or receipted invoices covering payment to the Contractor for previous calendar month period. Lien waivers must be unconditional and must show the amount paid.

B. An "Acknowledgment of Payment and Partial Unconditional Release" (see Section 01600 Forms) will be printed and distributed with the check to each Contractor by Barton Malow Company for payment of the previous month's application. The Waiver of Lien is to be signed by an authorized representative of the Contractor. Under no circumstances will payment be released until the completed "Acknowledgment of Payment and Partial Unconditional Release" has been submitted and signed by the Contractor from the previous month.

C. Final payment will not be made until a "Final Release Subcontractor/Material-man" (see Section 01600 Forms) has been submitted. This will also be distributed by the Barton Malow Company for Contractor signature and must be returned by the Contractor. The Final Release must be signed by an authorized representative of the Contractor must be notarized.

D. Final unconditional waivers will be required for all of Contractor's Subordinate Parties listed on Contractor's sworn statement. These final waivers must be submitted along with the final release, before payment can be made.

4.02 SWORN STATEMENTS

A. The appropriate number of original "Sworn Statements" (see Section 01600 Forms) must be completed to the satisfaction of Barton Malow Company, signed and notarized by an authorized representative of the Contractor and submitted with the Contractor's Application for Payment (see Part 2) monthly to the Barton Malow Company.

B. The Contractor's Subcontractor's sworn statements, waivers and other supporting documentation will be required with each pay application.

END OF SECTION 01290

SECTION 01310
MEETINGS

PART 1 - GENERAL

1.01 RELATED DOCUMENTS

A. Attention is directed to Bidding and Contract Requirements, and to Division 1, General Requirements, which are hereby made a part of this Section.

1.02 DESCRIPTION OF REQUIREMENTS

A. The Barton Malow Company shall schedule, chair, and administer all periodic meetings throughout the progress of the work for the purpose of coordinating and expediting the Work. Such meetings shall be held at the job site bringing together responsible representatives of active Contractors for the purpose of planning, assessing progress and discussing problems of mutual concern. Each Contractor, and its Subordinate Parties' representative attending the meetings shall be authorized to act on behalf of and make decisions/commitments for the entity each represents, the decisions made at the meetings and each Contractor who should be in attendance will be held responsible for information and directions given at the meeting.

B. The Barton Malow Company will prepare and distribute the minutes of all meetings, if Barton Malow Company determines minutes are required. If the attendees do not object in writing to any part of the meetings within ten (10) days of distribution of the minutes, the minutes shall be accepted as written.

B. The scope of meetings include, but are not limited to:
   1. Preconstruction Meeting
   2. Job Progress/Coordination Meetings
   3. Other Meetings

PART 2 - TYPES OF MEETINGS

2.01 PRE-CONSTRUCTION MEETING (KICK-OFF)

A. A Preconstruction (kick-off) meeting will be conducted with representatives of all the Contractors within thirty (30) days after the Agreement is awarded at the jobsite or as designated by the Barton Malow Company. The agenda may include:

   a. Discussion on major subcontracts and suppliers
   b. Major and/or critical work sequencing regarding the project schedule
   c. Project coordination and designation of responsible personnel
   d. Procedures and processing of field instructions, requests for proposal, submittals, change orders, applications for payment, etc.
   e. Quality assurance/control issues
   f. Adequacy of distribution of contract documents
   g. Procedures for maintaining record documents
   h. Use of premises, office, work and storage areas and other Barton Malow Company requirements
   i. Construction facilities/temporary utilities
   j. Safety and security procedures
   k. Other administrative procedures
   l. Review of Owner expectations

2.02 JOB PROGRESS/COORDINATION MEETINGS

A. On-site project coordination/progress meetings will be held on a bi-weekly basis or as appropriate throughout the life of the Project. The Barton Malow Company will set the agenda for the Project progress meeting. At a minimum, each Contractor shall be prepared to discuss the following:

a. Actual vs. scheduled progress for the prior two-week period
b. Planned construction activities for the next four weeks
c. Problems with, revisions to and corrective measures and procedures to regain the construction schedule, if required
d. Review of off-site fabrication, delivery schedules
e. Document clarification requests
f. Coordination items with other Contractors
g. Changes in the work affecting cost and/or time
h. Submittals and shop drawings
i. Field observations, problems, and conflicts
j. Quality control issues and non-conformance resolutions
k. Safety issue

2.03 OTHER MEETINGS

A. QUALITY ASSURANCE MEETINGS - Barton Malow Company may conduct quality assurance/quality control meetings as necessary during the progress of the Work. Barton Malow Company will set the agenda for the quality meeting. At a minimum, the Contractor shall be prepared to discuss the following:

a. Testing and inspection procedures
b. Tolerance requirements
c. Quality samples
d. Reporting of non-conformance items
e. Corrective actions assigned
f. Disposal of non-conforming items
g. Job procedures

B. SAFETY MEETINGS - Refer to Section 00810 Safety and Loss Control Program for more information.

C. INSPECTIONS TOURS - Formal inspections/tours may be made of the Project progress by the Owner, Architect, local, state or federal officials, insurance representatives, or others as the occasion warrants and as scheduled by Barton Malow Company. If requested by Barton Malow Company, each Contractor shall be prepared to show and explain Work throughout the building to the inspecting parties, in addition to providing Work in compliance with these inspections.

D. CHANGE REQUEST MEETINGS - Upon issuance of a major Proposal Request (a.k.a. bulletin), Barton Malow Company may conduct a meeting as necessary with all significant Contractors to review its contents and determine cost, delivery and schedule impacts. At a minimum, the Contractor shall be prepared to discuss the following:

a. Impact of out-of-sequence work
b. Identification of pertinent long-lead material and system impact
c. Alternative recommendations
d. Evaluation of approximate cost magnitude
e. Evaluation of impact on completion
f. Alternate sequencing
g. Due date for Contractor pricing and scheduling impact

END OF SECTION 01310

SECTION 01320
COMMUNICATIONS

PART 1 - GENERAL

1.01 RELATED DOCUMENTS

A. Attention is directed to Bidding and Contract Requirements, and to Division 1, General Requirements, which are hereby made a part of this Section.

1.02 SUMMARY

A. This Section describes the following requirements including:
   1. Contractor Correspondence
   2. Contractor's Daily Report
   3. Request for Information (RFI)

1.03 SUBMITTALS

A. Submittals shall be submitted based on each technical specifications section. Submittals containing information about more than one specification section will be returned for re-submittal. When the specifications call out specific materials, products or devices with model numbers, which the Contractor intends to use for the work, the Contractor can submit the Material Compliance Submittal form (found at the end of Section 01330). This form is to be signed by an officer of the company and notarized by a Certified Notary Public in the State of Michigan within fifteen (15) days of award of the contract. List all specified materials, products, etc. (with specific model numbers, series, type, etc.) certifying that the Contractor commits to using these products or materials as specified for their scope of work. **No Substitutions!** This certification letter will negate the need to provide individual submittals for these materials, products, devices. Contractor will provide information to allow proper coordination including electrical, mechanical connections and size, weight data.

PART 2 - METHODS OF COMMUNICATION

2.01 CONTRACTOR CORRESPONDENCE

A. All field and/or construction correspondence and/or communications must be directed through Barton Malow Company **1301 Boyd, Troy, MI 48083** and should list the following as appropriate:

Project: **Troy School District, 2004 Bond Program**
Phase 1 – Three Middle Schools Remodeling & Addition
Bid Package # 9361

Additional Project Designations required on some forms:
Barton Malow Company Project Number: **041049**
Architect's Project Number: **#2643-12**
Bid Package and Category Number **Bid Pack #9361**

Subject: Clearly indicate subject matter of correspondence

2.02 CONTRACTOR'S DAILY REPORT

A. Each **Contractor** will prepare and distribute daily to Barton Malow Company a comprehensive daily report and maintain it during the entire project period. The daily report shall be submitted to Barton Malow Company's superintendent by the end of the day for that day's Work.

A. Each **Contractor** is responsible for specifically alerting Barton Malow Company to items which could result in claims or delays. **The daily report shall include the following as a minimum:**

* **Manpower by trade**
* **Weather**
* **List of visitors**
* **Detailed description of work being performed with specific location, floor, and all other pertinent information**
* **Situations or circumstances which could delay work or give causes for delays or claims for extension or added costs**
* **Instruction of information requested**
* **Accidents, injuries, and incidents**
* **Materials received with attached material receipts**
* **Major equipment arrivals/departures**

B. Each **Contractor** may provide its own daily report if it covers the same issues as addressed in Barton Malow Company's Contractor Daily Report form. The suggested Contractor Daily Report form will be provided to the **Contractor** and is in Section 01600 - Forms.

2.03 REQUEST FOR INFORMATION (RFI)

A. The Request for Information (RFI) is in Section 01600 Forms.

B. In the event that a clarification is required due to a question raised by the **Contractor** pertaining to the Contract Documents, the **Contractor** shall submit a Request for Information (RFI) to the Barton Malow Company, which will be forwarded to the Architect.

C. The Architect will return the RFI to Barton Malow Company as expeditiously as possible with its reply. In some instances, the Architect may issue its reply to the RFI on other documents, in which case, the RFI will simply reference these documents.

D. The RFI will be returned to the **Contractor** by Barton Malow Company. The **Contractor** is responsible to give proper notice as set forth in the Contract Documents if a response will cause the **Contractor** to incur additional expense or expend additional time which could impact the schedule. If extra work or an additional cost may exist due to the clarification, Barton Malow Company may issue a PCO- Quotation Only or PCO- Notice to Proceed to the **Contractor** as described in Section 01250 Changes in the Work of the Project Manual.

END OF SECTION 01320

SECTION 01330
SUBMITTALS

PART 1 - GENERAL

1.01 RELATED DOCUMENTS

A. Specific attention is directed to all Bidding and Contract Requirements, and to Division 1, General Requirements, which are hereby made a part of this Section and relate to various submittals required to be submitted to Barton Malow Company for the Project.

B. Submit to Barton Malow Company: Shop Drawings, Certifications, Product Data, Samples, Tests, and all other submissions required by the Architect's technical specifications. Refer to each specification section for specific submittal requirements.

1.02 SUMMARY

A. This Section describes the following requirements including:
   1. Scope
   2. Submittal Register
   3. Submittal Requirements
   4. Submittal Process and Responsibilities
   5. Re-submission Requirements

1.03 SCOPE

A. Where requirements of this Section vary from the requirements of the General Conditions, this Section's requirements shall take precedence.

B. Barton Malow Company will prepare and submit a submittal register/schedule for Contractor's use in preparing submittals required for the Project. Contractors shall complete the submittal schedule/register showing the dates for submission, lead times required and their expected delivery dates. Submittals received on the date scheduled will be processed as specified. Contractor is responsible to provide all submittals required under the Contract Documents, whether or not listed in the submittal register. Barton Malow Company/Owner/Architect **will not** be held responsible for delays due to receiving submittals after the date indicated in the Contractor's submittal schedule.

C. Submittals shall be submitted based on each technical specification section. Submittals containing information about more than one specification section will be returned for re-submittal. When the specifications call out specific materials, products or devices with model numbers, which the Contractor intends to use for the work, the Contractor can submit the Material Compliance Submittal form (found at the end of Section 01330). This form is to be signed by an officer of the company and notarized by a Certified Notary Public in the State of Michigan within **fifteen (15)** days of award of the contract. List all specified materials, products, etc. (with specific model numbers, series, type, etc.) CERTIFYING THAT THE Contractor commits to using these products or materials as specified for their scope of work. **No Substitutions!** This certification letter will negate the need to provide individual submittals for these materials, products or devices. Contractor will provide information to allow proper coordination including electrical, mechanical connections and size, weight data.

D. Compliance Certificate: Refer to the attached Compliance Certificates (immediately following this section) for submissions document to be used by the contractor to indicate the product/devices intended for use in this project without the need for a formal shop drawings submittal. Items listed on this certificate are to be approved products indicated in the specifications. With the submission and approval of this document **NO FURTHER SUBMITTALS ARE REQUIRED** for the indicated specification section on the certificate.

The following specification sections are subject to this certificate:
TO BE DETERMINED – Will be issued via Addendum

E. No shop drawings, product data, or samples will be accepted by Barton Malow Company until Subordinate Parties have been approved.

F. Coordination: Each Contractor shall coordinate preparation and processing of submittals with performance of construction activities. Transmit each submittal sufficiently in advance of performance of related construction activities to avoid delay.

1. The Contractor, by providing the submittal assures the Owner, Architect and Barton Malow Company that the product or system submitted is available and deliverable in accordance with the schedule requirements.

2. Coordinate each submittal with fabrication, purchasing, testing, delivery, other submittals and related activities that require sequential activity.

3. Coordinate transmittal of different types of submittals for related elements of the Work so processing will not be delayed by the need to review submittals concurrently for coordination.

4. Barton Malow Company reserves the right to withhold action on a submittal requiring coordination with other submittals until related submittals are received.

5. Coordinate each submittal as required with all trades and with all public agencies involved.

6. Secure all necessary approvals from public agencies and others; signify by stamp or other means that all required approvals have been obtained.

G. Category Format Process: Submittals for this Project will be classified and managed using the following categories.

Category 1 - A submittal that establishes a level of quality by complying with the manufacturer and manufacturer's designated identifier as called for in the Contract Documents. Provide a "Letter of Compliance" committing to the use of specified components.

For record purposes, as part of the Letter of Compliance (or subsequently providing) a listing of those components will actually used or to be used. The Architect will only respond to the Letter of Compliance if something is wrong. This letter of compliance is contractually binding.

Category 2 - A submittal that represents a number of components assembled to represent a specific project need, or standard components that require modification to also meet a specific Project need. Individual submittals that completely represent their intent of the Contract Documents are required for this category. This type of submittal will be processed in a manner through the typical circle. A Contractor to Barton Malow Company or Architect to Barton Malow to Contractor.

Category 3 - A submittal that confirms compliance with governmental, industry or otherwise specified standard and/or requirements. Required is a Letter of Compliance committing the Contractor to obtain for record and/or otherwise be responsible for meeting the requirements of the contract documents. The Architect will only respond to the Letter of Compliance if something is wrong. This letter of compliance is contractually binding.

After the Award of Agreement, Barton Malow Company will provide the Contractor with a listing of submittal items.

Designation of Category 1 or 3 does not relieve the Contractor from providing the appropriate detailed documentation to Barton Malow Company and to other trades for the purpose of coordination of Work.

PART 2 - SUBMITTAL REGISTER

2.01 SUBMITTAL REGISTER/SCHEDULE

A. Barton Malow Company shall prepare and submit a listing of all items requiring submission, organized by specification section number, including the required close-out document submission recipients.

B. Submittal listings may include such items as:

1. Contractor's, or Subordinate Parties shop drawings.

2. Descriptive submittal types including, but not limited to:
   a. catalog cuts/product data
   b. diagrams
   c. operation charts or curves
   d. test reports
   e. samples
   f. operations and maintenance manuals, including parts list
   g. certifications
   h. warranties/guarantees
   i. other close-out documentation required

3. The Contractor's submittal register returned to Barton Malow Company shall include as a minimum:
   a. Submittal type and breakdown by specification section number of how the Contractor intends to submit the individual submittals for review (according to an intended sequence, area, etc.)
   b. Scheduled date for initial submittal of item
   c. Days required after return of approved submittal(s) to fabricate and deliver the specific item to the site (if applicable).

4. Barton Malow Company shall have the right to require the Contractor to add and/or delete items on the submittal register at any time.

5. Adequate time (approximately 3 weeks) shall be allowed for review and approval and possible re-submittal of any item subject to approval. No delay damages or time extensions will be allowed for time lost in late submittals or re-submittals.

6. The submittal register shall be coordinated with the schedule of values to insure delivery and payment requests are projected accurately. The Barton Malow Company will not be responsible for failure of the Contractor to properly schedule the process of material/product design, submittal, review, fabrication, delivery, storage and installation.

C. **The submittal register will become a part of the Agreement and the Contractor will be subject to requirements thereof.**

D. Each Contractor shall carefully coordinate preparation and processing of submittals to the performance of the Work so the Work will not be delayed by submittals. Coordinate and sequence different categories of submittals for the same Work and for interfacing units of Work, so that one will not be delayed by the coordination of the Architect's review with another. Drawings of component items forming a system or that are interrelated shall be correlated and submitted concurrently. Certifications to be submitted with the pertinent drawings shall be so scheduled.

E. Furnish approved copies of shop drawings, diagrams, templates, catalog cuts, technical data, etc. to other Contractors in other related Work designated by Barton Malow Company for the purposes of coordination of this Work.

F. If a Contractor does not submit the required submittal by the date marked on the submittal register, the Contractor will be subject to a $20/hr engineering fee back charge. This fee is established ONLY to ensure timely submission of submittals.

PART 3 - SUBMITTAL REQUIREMENTS

3.01 GENERAL

A. Each submittal shall show Contractor's review stamp, with handwritten signature, certifying review of the submittal, verification of field measurements and compliance with the Contract Documents.

B. Each submittal shall be accompanied with a Barton Malow Company Submittal Transmittal Form. A Submittal Transmittal Form will be provided to the Contractor See Section 001600 Forms. The following information shall be furnished by the Contractor on the submittal transmittal form:

1. Date
2. Project name and Architect's and the Barton Malow Company's project number
3. Names and Address of:
   a. Architect
   b. The Barton Malow Company
   c. Contractor
   d. Subcontractor (if applicable)
   e. Supplier
   f. Manufacturer
4. Identification of product or material
5. Technical Section number, clearly identified. On multiple submittals, a separate transmittal should be completed for each specification section on items being submitted.
6. Reference to construction drawings by drawing number
7. The quantity of each Shop Drawing, Product Data or Sample submitted
8. Notification of deviations from Contract Documents
9. Other pertinent data
10. LEED Requirements, including Post Consumer Recycling Content, Post-Industrial Recycled Content, Material Cost, and Distance from manufacturing point to jobsite, of Rapidly Renewable Content.

Submittals not so transmitted will be returned un-reviewed. Re-submissions shall be so noted on the transmittal.

C. Unless noted otherwise on the submittal, all submissions will be considered to be "as specified."

3.02 REQUIRED QUANTITIES OF SUBMITTALS

A. The following number of originals and copies will be required for each type of submittal:

Submittal Type	Submit
1. Manufacturer's, supplier's or Contractor's shop drawings	5 Sets
2. Manufacturer's catalog sheets, product data, brochures, diagrams, schedules, performance charts, etc.	5 Copies

3. Samples	4 Samples (unless a specific number is required by specification)
4. Certifications	2 Copies
5. Warrantees/Guarantees	2 Copies
6. Test Reports	2 Copies
7. Operating and Maintenance Manuals/Data	2 Copies

B. Following review by the Architect, documents will be distributed as follows:

1. One copy to be retained by the Architect
2. One copy to be sent to Owner/Architect
3. One copy each of original and reviewed submittal to be retained by Barton Malow Company
4. Sepias and all remaining copies to be returned to Contractor

3.03 SUBMITTAL IDENTIFICATION

A. This paragraph is included to explain the method for submittals identification using Section 08710. Finish Hardware and the Finish Hardware Schedule as an example.

B. The Contractor shall assign submittal designations utilizing the following format and system.

C. The number for the first shop drawing submitted under that Section would be 08710-1A, the "1" designating that this is the first submittal under Section 08710; and the "A "signifying" that it is the first time a "finish hardware" schedule has been submitted to the Architect's office. If this "finish hardware" submittal is marked "rejected-resubmit", the re-submittal would retain the 08710-1 but "A" would be changed to 08710-1"B" to designate re-submittal; the next re-submittal 08710-1"C", etc. until this "finish hardware" item is approved.

D. The second "finish hardware" submittal (door alarms) sent to the Architect's office for the first time would be 08710-2A, etc.

PART 4 - TYPES OF SUBMITTALS

4.01 SHOP DRAWINGS

A. Submit Shop Drawings as single copies in the form of positive printing reproducible transparencies (commonly called sepia prints) suitable for reproduction use on dry print diazo type machines and the required number of blue lines. Sepia prints which cannot be reproduced will be returned to the Contractor for re-submittal.

B. Provide Shop Drawings as complete submittals (no partial sets) on original drawings or information prepared solely by the fabricator or supplier. In no instance shall the Contract Drawings be reproduced for Shop Drawing submittals.

C. Sheet sizes shall not exceed the size of the Contract Drawings or smaller than 8-1/2" X 11".

D. Each sepia print shall have blank spaces large enough to accept two (2) 3" x 6" review stamps of the Contractor, the Barton Malow Company, and the Architect.

E. Each sepia print shall carry the following information:

1. Project name, Architect's and Barton Malow Company's project number.

2. Date and Revision Dates.
3. Names of and Address' of:
   a. Contractor
   b. Supplier
   c. Manufacturer
4. Identification of product or material.
5. Relation to adjacent structure or materials.
6. Field dimensions, clearly stated as such.
7. Technical Section number.
8. Applicable standards such as ASTM or Federal Specification.
9. Identification of deviations from Contract Documents.
10. Reference to construction drawings by drawing number and/or detail number.

F. Submit sepia prints without folds either as flat sheets if size permits, or rolled in tubes.

4.02 PRODUCT DATA

A. Product Data such as catalog cuts, brochures or manufacturer's preprinted sheets may be submitted in lieu of sepia prints if adequately identified. Submit the required number of copies of product data to the Barton Malow Company.

B. Modify Product Data sheets to delete information that is not applicable to the Project. Provide additional information if necessary to supplement standard information.

C. Product Data Sheets that are submitted with extraneous information not deleted and/or modified will be returned without review to the Contractor for re-submittal.

4.03 SAMPLES

A. Provide physical Samples to illustrate materials, equipment or workmanship, and to establish standards by which completed work may be judged as required by the technical section.

B. Provide Office Samples in sufficient size and quantity to clearly illustrate full range of colors, textures, etc. available and the functional characteristics of the product or material.

C. Erect Field Samples or mock-ups as required by the technical sections and/or Barton Malow Company at the Project site in a designated location by Barton Malow Company. Construct field samples complete, including Work of all trades required in finishing the Work. Provide Field Samples at the request of the Architect and/or Barton Malow Company where construction materials and/or methods deviate from the requirements of the intent of the Contract Documents or conventional construction practice.

4.04 CERTIFICATIONS

A. Provide certifications as required by various technical sections on the Contractor's letterhead stationary. (See item D of Section 1.03 SCOPE.)

B. Certifications shall clearly identify the materials in reference and shall state that the material and the intended installation methods, where applicable, are in compliance with the Contract Documents for this project. Attach manufacturer's affidavits where applicable.

4.05 WARRANTEES/GUARANTEES

A. Provide warrantees and/or guarantees as required by the various technical sections and other Contract Documents on the Contractor's letterhead in accordance with the requirements in Section 01740.

4.06 OPERATING AND MAINTENANCE MANUALS

A. Provide operating and maintenance manuals/data as required by the various technical sections in accordance with the requirements in Section 01730.

PART 5 - SUBMITTAL PROCESS AND RESPONSIBILITIES

5.01 CONTRACTOR'S RESPONSIBILITIES

A. Before making submittals to Barton Malow Company, review each submittal, make changes or notations as necessary to conform to the Contract Documents, identify such review with review stamp and forward reviewed submittal with comments to Barton Malow Company for review. Return submittals not meeting contract requirements to Subordinate Parties and do not forward such submittals to Barton Malow Company.

B. Verify field measurements and product catalog numbers or similar data.

C. Notify the Barton Malow Company and Architect, in writing at time of submission, of deviations in submittals from the requirements of the Contract Documents.

D. After the Barton Malow Company's and Architect's review, within one (1) week of receipt distribute copies to other Contractors and supplier/fabricators with one copy to be maintained at the Project Site for reference use.

E. Do not begin Work which requires submittals until return of submittals with Barton Malow Company's and Architect's stamp and initials indicating review.

F. Contractor's responsibility for errors and omissions in submittals is not relieved by Barton Malow Company's or Architect's review of submittals.

G. Contractor's responsibility for deviations in submittals from requirements of Contract Documents is not relieved by Barton Malow Company's or Architect's review of submittals unless Barton Malow Company and Architect give written acceptance of specific deviations.

5.02 BARTON MALOW COMPANY'S RESPONSIBILITIES

A. Barton Malow Company will administratively review all submittals and coordinate them with information contained in related documents. Barton Malow Company's review is for general administrative purposes only and neither this review, nor any subsequent approval by Barton Malow Company of a submittal, shall relieve Contractor from its obligations to comply fully with the Contract Documents.

B. Barton Malow Company will return to the Contractor, without review, all submittals not bearing the Contractor's review stamp or not showing it has been reviewed by the Contractor.

C. Barton Malow Company will make changes or notations directly on the submittals, identify such review with its review stamp, sign and forward acceptable submittals to the Architect.

D. After the Architect's review, Barton Malow Company will forward submittals to the Contractor and retain one copy. Contractor shall distribute copies with one copy to be maintained at the Project Site for reference use and other copies distributed to suppliers/fabricators. Contractor shall supply copies of reviewed submittals to Barton Malow Company in sufficient quantity to allow proper coordination of the Work.

5.03 ARCHITECT'S RESPONSIBILITIES

A. Architect will review submittals within ten (10) working days after receipt in the Architect's office. Submittals that must be reviewed by the Architect's consultants will be reviewed within fifteen (15) working days. The Architect or his consultant will be checking only for conformance with the design compliance of the Project and compliance with information given in the Contract Documents. Submissions that are large or of multiple submissions or required detailed or lengthy review by the Architect or his consultant may require additional time. Submissions for products or material that require a long lead time for delivery shall be noted as such and marked "Top Priority" so the architect may expedite the process.

B. Architect will return to Barton Malow Company without review any submittals not bearing the Contractor's or Barton Malow Company's review stamp or not showing that it has been reviewed by the Contractor and Barton Malow Company.

C. Architect will make changes or notations directly on the submittal, identify such review with its review stamp, obtain and record Architect file copy and return the submittal to Barton Malow Company.

D. Submittals shall be identified and submitted by individual technical specification sections only.

E. Kingscott Associates, Inc. will provide, for a fee, electronic data files compatible with AutoCAD 2000 for contractors' convenience and use in the preparation of shop drawings. Immediately following this section is the Request Form for electronic data. This request shall be directed to Barton Malow. Prior to the release of electronic files, the Architect will require a signed waiver of release and payment of the fee.

Approximate Fee Schedule: Fee varies depending on size, type of work, and discipline. Please contact Penny Mitchell at Kingscott (269-381-9440).

5.04 RE-SUBMISSION REQUIREMENTS

A. For Shop Drawings:

1. Review initial drawings as required and submit as specified for initial submittal.

2. Indicate on drawings all changes which have been made other than those requested by Barton Malow Company or Architect.

B. For Product Data and Samples:

1. Resubmit new data and samples as required for initial submission.

END OF SECTION 01330

SECTION 01360
COORDINATION (GENERAL)

PART 1 - GENERAL

1.01 RELATED DOCUMENTS

A. Attention is directed to Bidding and Contract Requirements, and to Division 1, General Requirements, which are hereby made a part of this Section.

1.02 COORDINATION OF WORK/COOPERATION

A. Each **Contractor** shall recognize the complex nature of the Project, the sequential nature of contracts and the concurrent and ongoing operations of the Owner and other **contractors** with the Work of this Project. All **Contractors** are required to review, discuss and coordinate their Work with the Work of other **contractors** as well as Barton Malow Company with regard to sequence, timing, built-in Work and equipment, layout, location, compatibility of materials and sizes and required clearances prior to beginning the work to avoid construction delays which impact the Owner's occupancy of the facility. Since the Work of each **Contractor** will depend upon interface with the Work of other **contractors**, changes in the scheduling, procedures, Work or Project conditions of a **Contractor** may affect the scheduling procedures, Work or Project conditions of other **contractors**.

B. Each **Contractor** shall coordinate construction operations in various sections of the technical specifications to assure efficient and orderly installation of each part of the Work that depends on each other for proper installation, connection, fit and operation. Each **Contractor** shall:

1. Schedule operations in the sequence required to obtain the best results where installation of one part of the Work depends on installation of other components, before or after its own installation.

2. Coordinate installation of different components to assure maximum accessibility for required maintenance, service and repair.

3. Make provisions to accommodate items scheduled for later installation.

4. Provide to all other trades all information (drawings, diagrams, templates, embedments, etc.) necessary for the coordination of the Work.

C. The completion of the Project within the prescribed time is dependent upon the close and active cooperation and open discussions of all those involved, therefore, it is expressly understood and agreed that each **Contractor** shall layout and install its Work at such time and in such manner as not to delay or interfere with the carrying forward of the Work of other **contractors**. Observation of the Work by others shall not relieve **Contractor** from its responsibility for coordination, supervision, or scheduling and direction of the Work.

D. **Contractors** are to report in a prompt manner any interferences, discrepancies or incompatibilities discovered to Barton Malow Company, whose decision as to the **Contractor** at fault and as to the manner in which the matter may be resolved, shall be binding and conclusive on **Contractors** involved. Barton Malow Company may direct layout/ location changes as required to make the entire work fit together. Reasonable changes of this nature will not entitle any **Contractor** to an increase in contract price.

E. Failure of a **Contractor** to notify other **contractors** and Barton Malow Company of a potential interference, incompatibility, or discrepancy and any failure to coordinate Work with that of other contractors prior to installation and/or fabrication shall be at the **Contractor's** risk.

F. Due to the nature of the Owner's existing areas, the sequence of Work must be scheduled and coordinated with the Owner's ongoing operations to minimize disruptions and/or disturbances to the Owner's Work and

at all times shall remain as secondary to the Owner's Work. Each segment of the Work shall be coordinated with Barton Malow Company prior to proceeding.

END OF SECTION 01360

SECTION 01400
QUALITY REQUIREMENTS

PART 1 - GENERAL

1.01 RELATED DOCUMENTS

A. Attention is directed to Division 0, Bidding and Contract Requirements, and to Division 1, General Requirements, which are hereby made a part of this Section.

B. Specific attention is directed to the requirements described in Section 01450 Testing and Inspection Services.

1.02 DOCUMENT CONTROL PROCEDURE

Each Contractor is to provide Barton Malow Company its document control procedure to include drawing submittals and surveillance. In the absence of such a procedure, the Contractor will use the following procedure for document control.

"A log is maintained identifying the drawing revision status, issue date and distribution (internal and external). The transmittal issuing the changed documents will indicate what changes are made and indicate that the documents are approved for use. Contractor meetings include a review of approved drawings. The review is documented in the meeting minutes. Superintendent surveillance activities include monitoring Contractor drawing use."

1.03 QUALITY CONTROL

A. Each Contractor is responsible to provide the Owner with a completed quality product for its Work. Each Contractor shall be responsible for any costs associated with re-testing and re-performing the Work as a result of the Contractor's poor performance or workmanship or other failure to comply with the Contract Documents.

B. All Work shall be done by persons qualified in their respective trades, and the workmanship shall be first-class in every respect. Each Contractor is responsible for ensuring employees are appropriately trained. All materials and equipment furnished shall be the best of their respective kinds for the intended use and unless otherwise specified, same shall be new and of the latest design.

C. The Contractor shall provide Barton Malow Company, Owner and Architect access to the Work in preparation and progress wherever the Work is located at all reasonable times.

D. Barton Malow Company and the Architect will have the authority to reject Work that does not conform to the Contract Documents or may require special inspection or testing, whether or not such Work is to be then fabricated, installed or completed. The Architect shall make all decisions with respect to questions concerning the quality or fitness of materials, equipment and workmanship.

E. Failure by a Contractor to conduct its operations, means and methods and coordinate proper sequencing of the Work may cause the Barton Malow Company to withhold payment or any other means deemed necessary to correct non-conforming Work.

F. The Barton Malow Company may/will employ without cost to the Contractors, a testing firm to perform such engineering laboratory services and on-site inspection as deemed necessary by the Owner, Barton Malow Company and/or the Architect to determine compliance with the requirements of the Contract Documents. This Work will not be a service to the Contractors for the performing of tests and checking of materials required of the Contractors.

G. The testing firm will report directly to the Barton Malow Company. Copies of test and inspection reports will be furnished to the appropriate Contractors. The laboratory and its representatives will be instructed to promptly call to the attention of the Contractor, any instance of non-compliance with the requirements of the Contract Documents. Failure to so notify the Contractor shall not relieve the Contractor of any of its responsibilities for compliance or making good workmanship or materials, which are not in compliance with the requirements of the Contract Documents.

H. Each Contractor shall cooperate with the testing firm and provide labor to assist with sample preparations where applicable.

1.04 NOTICE OF NON-CONFORMANCE

A. Barton Malow Company may conduct observations/evaluations of the Contractor's Work. Barton Malow Company and/or Architect's reviews do not relieve the Contractor from compliance with the Contract Documents or necessary corrections for deficiencies thereof. Contractors whose Work does not meet the standards set by the Contract Documents will be notified by representatives of the Barton Malow Company using a Notice of Non-Conformance Form. The Contractor, upon receipt of the Notice of Non-Conformance, shall complete and return the form and provide the corrective actions necessary in a timely manner as outlined on the Notice of Non-Conformance.

B. Control of nonconforming product: The Contractor shall establish and maintain documented procedures to ensure that product that does not conform to specified requirements is prevented from unintended use or installation. This control shall provide for identification documentation, evaluation, segregation (when practical), disposition of nonconforming product, and for notification to the functions concerned.

C. Review and disposition of nonconforming Work: Nonconforming product shall be reviewed in accordance with documented procedures. It may be

a) reworked to meet the specified requirements,
b) accepted with or without repair by concession,
c) regraded products for alternative applications, or
d) reject or scrap and dispose of nonconforming work and replace

D. The **Corrective Action Report (CAR) (CON 18.2)** is in Section 01600 Forms.

1.05 CONTRACTOR PERFORMANCE EVALUATION

A. Barton Malow Company will be evaluating Contractor's performance and will provide feedback during the life of the Project, on Contractor's performance, for the purpose of improving Barton Malow Company's Contractor selection process for future project endeavors.

B. Contractors will be requested to evaluate and provide feedback to Barton Malow Company on ways for improve on processes affecting the Contractors. None of these evaluations or feedback shall form part of the Agreement or Contract Documents.

C. This Contractor Performance Evaluation form is generated by the CPS Database.

END OF SECTION 01400

SECTION 01450
TESTING AND INSPECTION SERVICES

PART 1 - GENERAL

1.01 RELATED DOCUMENTS

A. Attention is directed to Bidding and Contract Requirements, and to Division 1, General Requirements, which are hereby made a part of this Section.

B. Except as indicated in this Section, refer to the various technical specification sections for specific testing requirements.

1.02 SCOPE OF INDEPENDENT TESTING LABORATORY SERVICES

A. The Barton Malow Company will employ and pay for the services of an Independent Testing and Inspection Laboratory to perform the following testing (unless additional testing is required in the specifications).

- Soils
- Concrete
- Steel
- Paving
- Roofing
- Masonry

B. Testing Laboratory inspection, sampling and testing is required as identified in the technical specifications.

1.03 QUALIFICATION OF TESTING AND INSPECTION LABORATORY

A. Meet "Recommended Requirements for Independent Laboratory Qualification", published by AMERICAN COUNCIL OF INDEPENDENT LABORATORIES.

B. Meet basic requirements of ASTM E-329, "Standards of Recommended Practice for Inspection and Testing Agencies for Concrete and Steel as Used In Construction" and ASTM D3740.

C. Authorized to operate in the State in which the Project is located.

D. Submit copy of report of inspection of facilities made by Materials Reference Laboratory of NATIONAL BUREAU OF STANDARDS during the most recent tour of inspection, with memorandum of remedies of any deficiencies reported by the inspection.

E. Testing Equipment:

1. Calibrated at reasonable intervals by devices of accuracy traceable to either:

   a. NATIONAL BUREAU OF STANDARDS.

   b. Accepted values of natural physical constants.

1.04 CONTRACTOR'S RESPONSIBILITIES

A. Each Contractor shall be responsible to provide and pay for all other testing associated with its scope of Work. Tests shall be made by a qualified independent testing agency approved by the Owner and

Architect. Coordinate selection of the testing agency through the Barton Malow Company. The Contractor shall arrange and pay for the following services:

1. Inspections and tests specified as the Contractor's responsibility in the various sections of the Specifications.

2. Inspections and tests required by the General Conditions including those tests required by codes, ordinances, or the approval authority of regulatory agencies.

3. Inspection and tests performed for the Contractor's convenience.

B. Contractor shall cooperate with the laboratory to facilitate the execution of its required services. Employment of the laboratory shall in no way relieve Contractor's obligations to perform the Work.

C. Contractor testing shall as a minimum comply with the requirements of this section.

D. The Contractor is responsible to pay the cost of additional testing in the event that additional testing of the Contractor's materials, installation, and other Work is required by the independent testing laboratory because of test results not in compliance with the Contract Documents and/or additional testing required as a result of Contractor's negligence or poor workmanship.

PART 2 - EXECUTION

2.01. TESTING AND INSPECTION LABORATORY DUTIES

A. Unless otherwise noted, the testing agency shall provide all required personnel and equipment as required for inspections and tests, for obtaining specimens and samples, and for delivery of specimens and samples to the laboratory when required.

B. The Testing Laboratory shall cooperate with Barton Malow Company to provide qualified personnel after due notice.

C. The Testing Laboratory shall perform specified inspections, sampling and testing of materials and methods of construction in accordance with specified standards and shall ascertain compliance of materials with the requirements of the Contract Documents.

D. The Testing Laboratory shall promptly notify Barton Malow Company of observed irregularities or deficiencies of work or products.

E. The Testing Laboratory shall promptly submit written report(s) of each test and inspection; submit one copy of report each to the Architect, Barton Malow Company, Owner, and Contractor with the following:

1. Date issued.
2. Project title and number.
3. Testing laboratory name, address and telephone number.
4. Name and signature of laboratory inspector.
5. Date and time of sampling or inspection.
6. Record of temperature and weather conditions.
7. Date of test.
8. Identification of product and specification section.
9. Location of sample or test in the Project.
10. Type of inspection or test.
11. Results of tests and compliance with Contract Documents.
12. Interpretation of test results, when requested by Architect.

2.02 LIMITATIONS OF AUTHORITY OF TESTING AND INSPECTION LABORATORY

A. Laboratory is not authorized to:

1. Release, revoke, alter or enlarge on requirements of Contract Documents.

2. Approve or accept any portion of the Work, but may provide an expert opinion whereby the Owner, Architect and Barton Malow Company may make an informed decision as to acceptance or rejection.

3. Perform any duties of the Contractor.

4. Stop the Work.

PART 3 – CONTRACTOR RESPONSIBILITIES

3.01 CONTRACTOR SHALL:

A. Cooperate with laboratory personnel, provide access to Work, to Manufacturer's operations.

B. Secure and deliver to Barton Malow Company adequate quantities of representative samples of materials proposed to be used of which require testing.

C. Provide to Barton Malow Company the preliminary design mix proposed to be used for concrete, and other materials mixes which require control by testing laboratory.

D. Furnish copies of Products test reports as required.

E. Furnish incidental labor and facilities as follows:

1. To provide access to Work to be tested.

2. To obtain and handle samples at the Project site or at the source of the product to be tested.

3. To facilitate inspections and tests.

4. For storage and curing of test samples.

F. Notify Barton Malow Company sufficiently in advance of operations (24 hours minimum) to allow for laboratory assignment of personnel and scheduling of tests.

1. When tests or inspections cannot be performed after such notice, reimburse Barton Malow Company for laboratory personnel and travel expenses and all of Barton Malow Company's other expenses incurred arising out of or resulting from Contractor's negligence.

G. Employ and pay for the services of testing laboratory to perform additional inspections, sampling and testing required:

1. For the Contractor's convenience.

2. When initial tests indicate Work does not comply with Contract Documents.

H. When the Contractor is providing the testing and prior to start of Work, submit testing laboratory name, address, and telephone number, and names of full time registered engineer and responsible officer. Submit copy of report of laboratory facilities inspection made by Materials Reference Laboratory of

National Bureau of Standards (NBS) during most recent tour of inspection, with memorandum of remedies of any deficiencies reported by the inspection.

3.02 RE-TEST RESPONSIBILITY

A. Where the results of required inspections, tests, or similar services prove unsatisfactory and do not indicate compliance with the requirements of the Contract Documents, the re-tests shall be the responsibility of the Contractor regardless of whether the original test was the Contractor's responsibility.

B. Re-testing of Work revised or replaced by the Contractor is the Contractor's responsibility where required tests were performed on original Work. All costs and fees for re-testing shall be paid by the Contractor.

C. Schedule delays and costs which are the result of non-conforming work or remedy will be the responsibility of the offending Contractor.

END OF SECTION 01450

SECTION 01510
FIRE PRECAUTIONS AND PROTECTION

PART 1 - GENERAL

1.01 RELATED DOCUMENTS

A. Attention is directed to Bidding and Contract Requirements, and to Division 1, General Requirements, which are hereby made a part of this Section.

1.02 SUMMARY

A. This Section describes the following requirements including:
   1. Fire Precautions and Protection/Noxious Odors and Fumes
   2. (Temporary) Fire Standpipe System
   3. Noxious Odors and Fumes

PART 2 - FIRE PRECAUTIONS AND PROTECTION

2.01 FIRE PRECAUTIONS AND PROTECTION

A. All **Contractors** and their Subordinate Parties shall assume full responsibility and take all necessary precautions to guard against and eliminate all possible fire hazards and to prevent damage to any construction work, building materials, equipment, temporary field offices, storage sheds, and all other property, both public and private. The location of the nearest corporation or public fire alarm box and the telephone number of the local fire department shall be conspicuously posted by **Contractor** throughout the field offices and in the building structure adjacent to its Work and it shall take precautions to prevent fire hazards in accordance with all fire protection and prevention laws and codes.

B. Each **Contractor's** superintendent in charge at the Project, shall review the entire Project at least once a week to make certain the **Contractor** has adhered to the conditions and requirements set forth herein.

C. No open fires shall be permitted. **Contractors** and their Subordinate Parties shall not be allowed to start fires with gasoline, kerosene or other highly flammable materials.

D. Welding, flame cutting, or other operations involving the use of flame, arcs, or sparking devices will not be allowed without adequate protection and shielding without prior permission of the Owner through the Barton Malow Company. All combustible and flammable material shall be removed from the immediate area. Material shall be protected with a fire resistant tarpaulin to prevent sparks, flames, or hot metal from reaching materials. **Contractor** shall provide the necessary personnel and fire fighting equipment to effectively control incipient fires resulting from welding, flame cutting, or other operations involving the use of flame, arcs or sparking devices. Each **Contractor** performing Work involving welding or open flame shall provide its own fire extinguishers in the immediate area of the Work.

E. Not more than a one day supply of flammable liquids such as oil, gasoline, paint or paint solvent shall be brought into any building at any one time. All flammable liquids having a flash point of 110 degrees F or below, which must be brought into any building, shall be confined to Underwriter's Laboratories' labeled safety cans. The bulk supply of all flammable liquids shall be detached at least 75 feet from the building and from yard storage of building materials. Spigots on drums containing flammable liquids are prohibited on the project site. Drums are to be equipped with approved vent pumps.

F. Combustible materials shall not be stored or left overnight within the confines of the permanent building. This includes all internal combustion engines using gas or fuel oil. Hoisting of flammable or combustible materials to the roof shall only be in quantities as needed for immediate use.

G. Only fire resistant tarpaulins shall be used on this Project.

H. The permanent fire protection water supply, fire extinguishing equipment, shut down and tie-ins between new and existing fire protection system shall be coordinated with the Owner and Barton Malow Company and be installed at the earliest possible date. Shut down of an existing fire protection system shall be for a minimum period of time. As each sprinkler system is completed and placed in service, the control valve shall be sealed. Permission to break seals and close sprinkler valves shall be given only by Barton Malow Company with approval of the Owner.

I. Barton Malow Company will provide and maintain in working order at all times during construction not less than four (4) fire extinguishers conveniently located for each floor area having 50,000 square feet or less. One (1) additional fire extinguisher will be provided for each additional 15,000 square feet of floor area.

J. Fire extinguishers provided by Barton Malow Company and Contractors shall be "all purpose", and not a water type, to meet the approval of the Fire Underwriter's Laboratory, and will be inspected at regular intervals and recharged if necessary.

K. In areas of flammable liquids, asphalt or electrical hazards, extinguishers of the 15 lb. carbon dioxide type or 20 lb. dry chemical type shall be provided by the **Contractor** creating such hazard.

L. Each **Contractor** agrees that, in the event of fire, all its workers and all Subordinate Parties workers anywhere on site will assist in extinguishing the fire.

M. **Contractor's** and their Subordinate Parties' shanties of combustible construction shall not be placed inside of any structure. Such shanties shall be detached at least seventy-five (75) feet from the building or as directed by the Barton Malow Company with approval of the Owner. Totally incombustible shanties may be, if approved in writing by Barton Malow Company, located inside of the structure.

N. Use of only Underwriter's Laboratory approved heaters and/or stoves is permitted in field offices or storage sheds and they shall have fire resistive material underneath and at the sides near partitions and walls. Pipe sleeves and covering shall be used where stove pipe runs through walls or roof.

O. Flammable portions of construction shanties inside the structure must be painted inside and outside with "ALBI" fire retardant paint or other fire retardant paint of equal quality as approved by the Owner.

2.02 (TEMPORARY) FIRE STANDPIPE SYSTEM

A. Permanent risers shall be installed as floor slabs are cast, with capped 2 1/2 inch hose valves on each floor and temporary cap or plug on top. One riser at a time shall be extended up so that remainder are available for use at all times.

B. Provide permanent cross connections or provide temporary cross connections.

2.03 NOXIOUS ODORS AND FUMES

A. All Contractors are notified that combustion engine equipment, tar kettles and any other items causing noxious odors or fumes will NOT be allowed in the building or near air intake louvers. If intake louver locations are in doubt, consult with Barton Malow Company.

END OF SECTION 01510

SECTION 01520
TEMPORARY CONSTRUCTION FACILITIES AND CONTROLS

PART 1 - GENERAL

1.01 RELATED DOCUMENTS

A. Attention is directed to Division 0, Bidding and Contract Requirements, and to Division 1, General Requirements, which are hereby made a part of this Section.

1.02 SUMMARY

A. This Section describes the following requirements including:
1. Project Signage
2. Snow Removal
3. Security
4. Temporary Field Office, Facilities and Parking
5. Temporary Fencing
6. Temporary Toilet Facilities
7. Drinking Water/Temporary Water
8. Roof Protection
9. Scaffolding
10. Water Control
11. Temporary Material Hoist/Elevator
12. (Temporary) Fire Standpipe System (see Section 01510 Fire Precautions and Protection)
13. Temporary Stairs, Ladders, Ramps, Runways, and Barricades
14. Temporary Electrical Power and Light
15. Temporary Heating , Cooling and Weather Protection
16. Temporary Enclosures

PART 2 - CONSTRUCTION FACILITIES

2.01 PROJECT SIGNAGE

A. The **Barton Malow Company** shall provide a project sign. No other signs or advertising shall be displayed on the premises without the approval of the Architect, Owner, and Barton Malow Company. This does not exclude the posting of required trade notice and cautionary signage by **Contractor's**.

2.02 SNOW REMOVAL

A. **Contractors** performing Work under exposed conditions shall remove snow and ice for the protection and execution of their Work. Keeping public traffic areas and circulation routes free of snow shall be the responsibility of the **Barton Malow Company.**

2.03 SECURITY

A. The services of a security guards **will not** be provided by **either the Owner or Barton Malow Company**.

B. Each **Contractor**, at its own cost and expense, may provide security guard, protective service or other means of site security as it deems necessary.

C. **Contractors** shall advise Barton Malow Company of any theft or damage which might delay the execution of the Work and furnish the Owner and Barton Malow Company with a copy of any theft report filed with local, county or state agencies.

D. Neither Barton Malow Company nor Owner assumes any responsibility for loss, theft or damage to the **Contractor**'s materials or for damage to Work in place before the completion of the construction. In the instance of any such loss, theft or damage, the **Contractor** shall be responsible to renew, restore or remedy the Work, tools, equipment and construction in accordance with requirements of the Contract Documents without additional cost to Barton Malow Company.

E. Barton Malow Company is not responsible for damage, liability, theft, casualty or other hazard to the automobiles or other vehicles, nor to injury, including death, to occupants of automobiles or other vehicles on the Owner's property.

F. Barton Malow Company may establish additional security policies and procedures. All **Contractor**s will be required to cooperate with Barton Malow Company in implementing these procedures.

G. Site-parked equipment, operable machinery and hazardous parts of the new construction subject to mischief and accidental operation shall be inaccessible, locked or otherwise made inoperable when left unattended.

2.04 TEMPORARY FIELD OFFICE, FACILITIES AND PARKING

A. The Owner **shall** designate **an area** for construction trailers. Placement and scheduled duration shall be coordinated by Barton Malow Company. Each **Contractor** is responsible to verify that all field offices, trailers and storage sheds shall be in accordance with the local Fire Marshal having jurisdiction. Each **Contractor** shall arrange and pay for its own telephone hookup and use. Each **Contractor** shall arrange and pay for its own temporary electrical hook-up, water and toilets. The **Contractor** shall pay for all power used for the **Contractor**'s temporary field office and temporary electrical service. Construction personnel **will** be allowed to use the existing Owner parking facilities. Designated **Contractors will** be allowed to have on-site construction trailers. Construction trailers shall be limited to **10' x 30'** or smaller.

B. **Contractor**s shall maintain the use of designated space for offices and sheds. This includes removal of weeds, debris, trash and clean-up of the area after removal of such temporary structures.

C. Temporary field offices and sheds shall not be used for living quarters. .

D. Offices and sheds shall be of suitable design, maintenance and appearance, and meet the approval of Barton Malow Company and all applicable local codes and ordinances.

E. All temporary offices and sheds including foundations, must be removed within ten (10) days of written notice from Barton Malow Company including restoration of grade. Structures not removed in a timely manner will be removed by Barton Malow Company at **Contractor**'s expense.

PART 3 - TEMPORARY CONSTRUCTION CONTROLS

3.01 TEMPORARY FENCING

A. The **Barton Malow Company shall** provide temporary fencing with gates for required access and remove same at the completion of the Project.

B. The **Contractor**s shall repair or replace fencing damaged as a result of its operation. **Contractor**s shall remove and replace fencing and gates required to provide access for oversized items.

C. **Contractor's personnel are not allowed to work outside of the construction fence without permission of the Barton Malow Company.**

3.02 TEMPORARY TOILET FACILITIES

A. The **Barton Malow Company** shall provide and maintain temporary toilet facilities for the construction of the Project. The use of the Owner's existing permanent facilities is as described in Section 01140 Use of Premises.

B. **During renovation activities, Barton Malow Company may obtain, through the Owner, permission to use designated toilet facilities within the contract boundaries for construction use. The use of the Owner's existing permanent facilities outside the construction boundaries is strictly not allowed.**

3.03 DRINKING WATER/TEMPORARY WATER

A. The Owner **will** pay for water used on this Project.

B. Immediately after award of the Agreement, the **Mechanical Contractor** shall furnish, install, maintain and subsequently remove a temporary hookup to the Owner's potable water system where directed by Barton Malow Company for construction purposes. The **Contractor** shall provide all temporary piping and approved backflow prevention as necessary for distribution from the source. Distribution of temporary water will be paid for by **Contractors** requiring same. A minimum of One **(1)** hose bibs shall be provided **within the fenced construction area** by the **Contractor** as directed by Barton Malow Company.

3.04 ROOF PROTECTION

A. **Contractors** and their Subordinate Parties, shall be responsible for damages to roofing, sheet metal and roof structure while performing Work. The Roofing **Contractor** will perform the repair Work at the expense of the **Contractor** responsible for the damage.

B. **All Contractors will protect adjacent existing roof surfaces while performing their Work. No construction materials will be allowed to be placed on existing roof surfaces without prior approval of the Owner through the Barton Malow Company.**

3.05 SCAFFOLDING

A. Each **Contractor** is responsible for providing and maintaining any and all ladders, scaffolds and other staging as required to complete its Work. All such ladders, scaffolds and staging equipment shall be erected, maintained and subsequently removed by each **Contractor** in accordance with all applicable safety laws, rules and regulations.

3.06 WATER CONTROL

A. All pumping, bailing or well point equipment necessary to keep excavations and trenches free from the accumulation of water during the entire excavating and backfilling progress of the Work shall be the responsibility of the **Contractor** performing said excavations and trenches due to its scope of Work.

B. **The Sitework Contractor** shall be responsible for keeping the building at grade and below free from water from the time the building backfill is completed until the building is watertight.

C. Dispose of water in such a manner as will not endanger public health or cause damage or expense to public or private property. Abide by the requirements of any public agencies having jurisdiction.

3.07 TEMPORARY MATERIAL HOIST/ELEVATOR

A. **Each Contractor is responsible for its own hoisting and material equipment movement costs as required to complete the Work under its Agreement.**

3.07 TEMPORARY MATERIAL HOIST/ELEVATOR (Cont'd)

B. Barton Malow Company may operate and maintain a permanent elevator until such time as all material hoisting requirements have been met. Elevator requirements in excess of the capacity or size of this elevator shall be provided by each **Contractor** at its expense. This elevator shall not be used for the placement of concrete, the transporting of workers, or other means inconsistent with its use as directed by Barton Malow Company. The operating cost for all overtime use of the elevator shall be paid by the **Contractor** requiring such services.

C. The Elevator **Contractor** shall be obligated to extend warranty and guarantee periods on any permanent equipment used prior to Substantial Completion.

D. Transportation of construction materials through the Owner's facility shall be accomplished in accordance with the requirements described in Section 01140 Use of Premises in such a manner so as to:

1. Not damage any of the existing facility.

2. Not impair the Owner's use of the facility.

3. Not create any type of mess or additional cleaning requirements in Owner occupied areas.

3.08 TEMPORARY STAIRS, LADDERS, RAMPS, RUNWAYS, AND BARRICADES

A. Each **Contractor** is to provide and maintain all necessary temporary stairs, ladders, ramps, and runways to facilitate conveyance of workers, materials, tools, and equipment for proper execution of its Work. All protection and safety barricades, devices, covers, and all other necessary items shall be provided by each **Contractor** as it relates to the safe conduct of its Work and protection of people and property in its Work area in accordance with applicable law.

B. Any **Contractor** or Subordinate Party performing excavation Work shall be responsible to furnish, install and maintain temporary barricades and/or fencing of all open excavations until such time as the backfilling is complete. Flasher lights shall be provided on barricades and fencing by the **Contractor** as requested by Barton Malow Company and in accordance with applicable law. As a minimum, all barricades across roads and walks shall have lights on them in working condition.

C. The Structural Steel **Contractor** shall provide temporary guardrails at the building floor perimeters, interior shafts, all roof areas, or other openings, immediately after the erection of the **steel** frame and with the installation of **metal** decking. Protection shall be OSHA 29 CFR Part 1926.502 (B) "Guardrail Systems" and shall include but not be limited to two line rails and toe boards. This temporary protector shall be left in place after completion of the **steel** frame for the use of all other **Contractors**. The Structural Steel **Contractor** shall maintain and remove said guardrails and patch concrete. Each **Contractor** that disturbs any temporary protection for its Work is responsible to protect the area during its Work and to reinstall to its original condition the guardrail or barricade system for the protection of the workers and others until final construction of perimeter exterior wall and/or shaft openings is completed. All other protection and safety barricades, devices, covers, etc. shall be provided by this **Contractor** as it relates to the safe conduct of its Work in accordance with all local, state and federal regulations and the requirements of the Contract Documents, and shall be in accordance with the most stringent requirements.

D. Each **Contractor** and its Subordinate Parties shall provide and maintain in good repair barricades, overhead protection, guard rails, etc., as required by law or necessary for the protection of the public and personnel engaged in the Work from hazards incidental to performance of the Work. **Contractor** shall do everything necessary to protect the Owner's employees, the public and workers from injuries and to protect vehicles and other property from damage.

3.09 TEMPORARY ELECTRICAL POWER AND LIGHT

A. Electrical Energy Costs

1. The Owner **will** pay for electrical energy to operate temporary electrical power and lighting for the duration of the project at designated locations. Temporary power **will** be provided free of charge.

B. Power Source

1. The Electrical **Contractor** shall provide, install, and pay for labor, equipment and materials required to make connections to **the local utility company** and to provide temporary electrical power and light distribution. The Electrical **Contractor** shall coordinate the location of the electrical power and lighting as directed by Barton Malow Company.

2. The Electrical **Contractor** will provide for **each** construction trailer(s) a 120/208 volt (or 120/240 volt), 100 ampere single phase power source to which the **Contractor** who occupies the trailer may connect. The cost of hook up and removal of temporary electrical service to trailer shall be each **Contractor**'s responsibility.

3. Protection shall be provided for the power supply source complete with disconnect switch and other required electrical devices.

C. Rules and Regulations:

1. All temporary equipment and wiring for power, lighting and distribution requirements shall conform to OSHA requirements and be in accordance with applicable provisions of governing laws, codes, and ordinances.

2. All temporary wiring and distribution equipment shall be maintained so as not to constitute a hazard to persons or property.

3. Each **Contractor** is responsible to provide an assured grounding program in accordance with OSHA regulations for their own electrical power requirements.

D. Temporary Power Distribution:

1. The Electrical **Contractor** will provide and maintain temporary power distribution as follows:

   Construction power shall be 120/208 volts, 3 phase, 4 wire plus ground. Provide the following outlets together with feeders, grounding, protective devices and ground fault interrupting devices.

   a. Power centers - on each floor of the new building, provide a minimum of two (2) power centers or not less than one (1) per 10,000 s.f. rated not less that 100 amperes at 120/208 volt, 3 phase. 4 wire plus ground. Locate the power centers such that each will serve approximately equal areas and as far as possible, each be in the center of the respective area served.

   b. 120 volt duplex outlets - Provide weatherproof, G.F.I. protected, 20 ampere grounded outlets at a minimum rate equal to 1 - duplex outlet per 400 square feet. Outlets may be grouped in clusters of up to six duplex types with corresponding pro-rated increase in area served, provided that every portion of the construction and remodeled premises can be reached from the nearest outlet using a flexible cord no more that 50 feet in length.

2. As partitions are erected, locations of power distribution points shall be added or relocated.

3.09 TEMPORARY ELECTRICAL POWER AND LIGHT (Cont'd)

3. Ground Fault Circuit Interrupter (GFCI) protection will be provided on all temporary power receptacles and, where possible, directly on the circuit breaker supplying temporary power as referenced in NEC 305-6(a).

4. The assured equipment grounding conductor program is only to be used on circuits greater than 20 amps as referenced in NEC 305-6(b).

E. Temporary Electrical Light Distribution:

1. The **Electrical Contractor** shall provide and maintain temporary electrical light distribution as follows:

a. Lighting shall be achieved using 120 volt guarded incandescent fixtures, or other suitable fixture types, to OSHA required minimum levels of illumination.

b. 120 volt temporary lighting as required in interior work areas. In addition to these minimum requirements provide adequate security lighting at guarded entrances outside storage areas, parking areas, and in areas of **Contractor**'s and Architect's field offices and sheds.

2. As partitions are erected or other interferences which hamper achieving the minimum levels of illumination, locations of lighting distribution points shall be added or relocated.

3. Task lighting in addition to OSHA required lighting shall be provided by each **Contractor**.

F. Temporary Power and Light for Special Conditions:

1. Special conditions for temporary electrical power and lighting required by others shall be provided as follows:

a. Each **Contractor** requiring service of capacity or characteristics other than specified must make arrangements with the Electrical **Contractor** and pay for their own installation, removal, and service.

b. Where 3 phase power is required, the **Contractor** must pick up service at the distribution panel located outside the building addition.

c. The necessary grounded portable cords, lamps, light-stands, and fuses from the distribution outlets to points of use shall be provided by each **Contractor** to suit its own requirements.

G. Servicing of Temporary Power and Lighting:

1. The Electrical **Contractor** shall be responsible for the following:

a. Servicing, repairing and rearrangement of service equipment, temporary power, temporary lighting, and re-lamping.

b. Removal and disposal of temporary electrical power and lighting at completion of the Project or when so directed by Barton Malow Company and repair of damage caused by installation or removal.

H. Permanent Electrical Power and Lighting:

1. When permanent electrical power and lighting systems are in operating condition, they may be used for temporary power and lighting for construction purposes provided the Electrical **Contractor**:

a. Obtains the approval of the Architect and/or Owner through Barton Malow Company.

b. Assumes full responsibility for operation of the entire power and lighting systems.

c. Verifies that warranty dates are established prior to usage of equipment and lamps.

d. Pays costs for operation, maintenance, and restoration of the systems.

2. As permanent power and lighting becomes available, these systems will generally supplant the appropriate portions of the temporary installation.

3.10 TEMPORARY HEATING AND WEATHER PROTECTION

A. Temporary heating requirements during the course of construction shall be divided into two categories as follows:

1. Cold weather protection.

2. Temporary heating.

B. Cold Weather Protection:

1. Heating required during the construction period prior to enclosure of the building shall be classified as "cold weather protection."

2. Each **Contractor** shall provide temporary heating and protection, necessary to allow its Work to continue during cold weather to meet the project milestone dates prior to building enclosure, including:

a. The heating of materials (such as water and aggregate) as well as space heating for protection of newly placed or built construction at required temperatures (but not lower than 50 degrees F) and for the time specified.

b. Flame-proofed tarpaulins and other materials used for temporary enclosures.

3. **Contractor** shall provide plan to allow Work to continue without regard to temperature.

4. Heat shall be provided by smokeless UL approved portable unit heaters, using fuel of types and kinds approved by Underwriter's Laboratories, Factory Mutual, and the Fire Marshal.

a. The **Contractor** shall provide fuel, power, maintenance, and attendance required for operation of portable heaters.

b. Interior or exterior surfaces damaged by the use of portable heating units shall be replaced with new materials at the responsible **Contractor**'s expense.

5. It shall be the responsibility of each **Contractor** to protect its own Work.

C. Temporary Heating:

1. Daily construction heat required after the building is enclosed shall be classified as "temporary heating" and will be the responsibility of the Owner to install and maintain.

2. The building or buildings or any portions thereof shall be considered enclosed when in the opinion of Barton Malow Company:

a. The exterior wall system and temporary interior wall enclosures are in place.

b. Openings in exterior walls are covered to provide reasonable heat retention.

c. The building is ready for interior drywall, masonry and plastering operations.

d. The permanent roof is substantially installed.

The **Barton Malow Company** shall provide and maintain the temporary interior wall enclosures. If the exterior wall system is not complete in time to provide building enclosure of a portion of the new structure as scheduled, the **Barton Malow Company** shall provide and maintain temporary exterior wall enclosures of polyethylene and, in addition to exercising all other rights and remedies under the Contract Documents and law, Barton Malow Company shall be entitled to deduct the cost of such enclosures from the moneys due or to become due the **Contractor**(s) responsible for failure to meet said schedule.

3. In areas of the building or buildings where Work is being conducted, the temperature shall be maintained as specified in the various sections of the specifications, but not less than 50 degrees F for interior rough-in and not less than 60 degrees F during finishes installation. The temperature shall not be allowed to reach a level that will cause damage to any portion of the Work, including materials stored in the building, which may be subject to damage by low temperatures.

4. Until the permanent heating system, or suitable portion thereof, is in operating condition, provide sufficient and UL approved space heaters of suitable capacity to maintain required temperatures in areas where work is being conducted and materials are stored. Include all necessary maintenance, venting and attendance for this temporary heating to meet all applicable laws, rules and regulations.

5. When the permanent heating system, or a suitable portion thereof, is in operating condition, the system may be used for temporary heating, provided the **MECHANICAL Contractor**:

   a. Obtains approval from Barton Malow Company in writing for its use and any special provisions required for its temporary operation.

   b. Assumes full responsibility for the entire heating system until final acceptance of the system by the Owner.

   c. Uses supply only, not return if temporary heating utilizes the building's ductwork system.

   d. Pays all costs for maintenance, attendance and restoration to "like new" condition of the system including final cleaning of equipment and ductwork and all necessary touch-up painting.

   e. Turns over satisfactory evidence to Barton Malow Company showing the extended warranties from manufacturers and proper maintenance procedures.

   f. Provides and maintains temporary filters, boxes and other parts used for the temporary condition and replaces same with the new permanent filters at time of occupancy consistent with the warranty provisions. The **MECHANICAL Contractor** shall pay the cost of extending warranty and guarantee periods on any permanent equipment used prior to substantial completion.

6. Electrical power required for temporary heating **will** be furnished free of charge. The installation and service of the necessary temporary electrical feeders will also be the responsibility of the Electrical **Contractor**.

3.11 TEMPORARY ENCLOSURES

A. **Contractor** shall provide temporary (insulated) weather-tight closures of openings in exterior surfaces to provide acceptable working conditions and protection for materials, to allow for temporary heating, and to prevent entry of unauthorized persons. Provide doors with self-closing hardware and locks.

B. **Contractor** shall provide temporary roofing as required to provide and maintain a watertight enclosure during construction.

C. **Contractor** shall provide temporary partitions and ceilings as required to separate Work areas from Owner occupied areas, to prevent penetration of dust and moisture into Owner occupied areas and to prevent damage to Owner's facilities and equipment.

END OF SECTION 01520

SECTION 01530
FIELD ENGINEERING AND LAYOUT

PART 1 - GENERAL

1.01 RELATED DOCUMENTS

A. Attention is directed to Bidding and Contract Requirements, and to Division 1, General Requirements, which are hereby made a part of this Section.

1.02 LAYOUT OF THE WORK

A. **Each Contractor shall be responsible for the layout and engineering of its own Work from the established points and lines given by a registered surveyor employed by Barton Malow Company and to coordinate with all other trades.**

B. Each **Contractor** is responsible for detailed and accurate layout of its own and its Subordinate Parties' Work to dimension from the principal lines, grades and levels set forth in the Contract Documents or the principal lines, grades and levels provided by a registered surveyor hired by **Barton Malow Company**. Each **Contractor** shall make provisions to preserve all control points, such as monuments, stakes, bench marks or other datum points and shall replace at its own cost any of these which might be lost or displaced through its neglect.

C. **Contractors** shall examine the conditions under which the Work is to be installed, shall take field measurements and verify field conditions and shall carefully compare such field measurements and conditions and other information known to the **Contractor** with the Contract Documents before commencing activities. Any errors, inconsistencies, omissions, discrepancies or conditions detrimental to proper performance of the Work that are discovered shall be reported to Barton Malow Company at once. **Contractors** are not to proceed until the required corrections are accomplished.

D. The exactness of grades, elevations, dimensions, or locations given on any Drawings issued by Architect or the work installed by other contractors, is not guaranteed by Owner or Barton Malow Company. The **Contractor** shall, therefore, satisfy itself as to the accuracy of all grades, elevations, dimensions, and locations. In all cases of interconnection of its Work with existing or other Work, it shall verify at the site all dimensions relating to such existing or other Work. Any errors due to the **Contractor**'s failure to verify all such grades, elevations, dimensions, or locations shall be promptly rectified by the **Contractor** without any additional cost to the Owner or Barton Malow Company.

E. As the Work progresses, the **Contractor** shall prepare lay out drawings showing the exact locations of Work under its Contract as a guide to all trades. Prior to any installation, the separate **Contractors** shall exchange layout drawings and coordinate the Work and be subject to verification by all subsequent **Contractors**.

F. As Work under each Agreement commences, the condition of preceding Work under other agreements shall be verified and accepted by each subsequent **Contractor** when appropriate. Verification may, at Barton Malow Company's discretion, include a joint review by the subsequent **Contractor**, previous contractor(s), and Barton Malow Company to note any corrective Work required, damage to previous Work, verification of elevations, tolerances, levels and plumbness, critical dimensions, surface conditions, and similar items affecting the Work under the Contract Documents and particularly items which prevent acceptance by the subsequent contractors. The verification review procedures and findings shall be documented in writing by subsequent Contractors, signed by all parties, and copies provided to the Barton Malow Company. Any corrective work necessary to satisfy requirements of the Contract Documents shall be performed promptly by the previous **Contractor** to prevent delay to the work under the subsequent Contracts. After corrective work is accomplished the subsequent **Contractor** shall furnish written acceptance of the work as noted above. Barton Malow Company's participation in a joint review under this paragraph shall in no event be

deemed to constitute approval of any layout or other Work that fails to comply with the **Contract Documents**.

G. Each **Contractor** shall be responsible to take such field measurements as may be required to determine the size of ordered material. In the event "guaranteed dimensions" are required, the **Contractor** shall promptly advise other **Contractors** through Barton Malow Company by use of drawings, templates or mock-ups of the required conditions.

H. All Work, and in particular, piping, ducts, conduit and similar items, shall be neatly and carefully laid out to provide the most useful space utilization and the most orderly appearance. Except as otherwise indicated or directed piping and similar Work shall be installed **as close to above ceiling floor slabs and walls** as conditions reasonably permit, located to prevent interference with other Work or with the use of the spaces. Before **Contractor** installs a valve in an exposed location, it must make all efforts to install it in an accessible, concealed location. **Contractors** shall carefully plan the layout and review any questionable installations with Barton Malow Company.

I. The Owner or Barton Malow Company may utilize a registered land surveyor to verify alignment and layout of certain portions of the Work. If that Work is out of tolerance or incorrect, the installing **Contractor** will be responsible for prompt correction of the Work to comply with the Contract Documents, along with all expenses incurred by Owner or Barton Malow Company in such verification process, including, but not limited to, the cost for the surveying services, as well as the additional time expended by Barton Malow Company personnel at standard billing rates.

END OF SECTION 01530

SECTION 01540
CUTTING AND PATCHING

PART 1 - GENERAL

1.01 RELATED DOCUMENTS

A. Attention is directed to Bidding and Contract Requirements, and to Division 1, General Requirements, which are hereby made a part of this Section.

1.02 INSPECTION

A. Before cutting existing surfaces, examine surfaces to be cut, including elements subject to damage or movement during cutting and patching work. Report any unsatisfactory or questionable conditions to Barton Malow Company in writing.

B. Before proceeding, meet at the site with Barton Malow Company and the parties involved in cutting and patching, including mechanical and electrical trades. Review areas of potential interference, conflict and possible effects on the Owner's existing operations. Coordinate procedures, temporary support, methods of dust and water protection, etc. and resolve potential conflicts before proceeding.

C. When working in and around existing buildings, if any hazardous material is encountered or is suspected to be present, Barton Malow Company must be notified and Work in the affected area is to stop as described in Section 00840 Hazardous Materials until further direction is given by Barton Malow Company or the Owner.

1.03 PREPARATION

A. Provide adequate temporary support as necessary to assure the structural value and integrity of the affected portion of the work. Where specified or required, submit temporary support methodologies to the Architect for approval.

B. Provide devices and methods to protect adjacent areas or other portions of the Project from damage including dust protection, water protection, and exposure. Maintain excavations free of water, and all other devices and methods as necessary to provide protection from the elements.

1.04 EXECUTION

A. The use of **gasoline powered equipment, jackhammers or power actuated tools, explosives** is prohibited on this Project. **The use of electric and pneumatic impact hammers must be first authorized and coordinated by the Barton Malow Company prior to usage.**

B. Each **Contractor** on behalf of itself and its Subordinate Parties is responsible for the cutting of all holes and openings through existing walls, partitions, ceilings, floors and roofs as necessary for the installation of its Work as specified in the Contract Documents. Holes and openings shall be neatly cut and of minimum size to allow the Work to be installed. Execute cutting and demolition by methods which will prevent damage to other Work, and will provide proper surfaces to receive installation of repairs.

C. Execute work in such a manner as to minimize disruptions to or interference with the Owner's normal operations or functioning in the existing buildings and provide all means necessary to provide safety and convenience of those employed in and about the premises.

D. Each **Contractor** is responsible for patching of all holes and openings it makes. Fit work should be airtight to pipes, sleeves, ducts, conduit and other penetrations through surfaces. Patching is to match adjacent surfaces in materials and finish. Each **Contractor** is to utilize only tradesmen skilled in the specific finish and material involved in making the patches. All patching is to be done in a neat and workmanlike manner

to the satisfaction of Barton Malow Company. Defective Work shall be corrected at no cost to the Owner and Barton Malow Company.

E. Where new Work connects with existing Work, **Contractor** shall do all necessary cutting and fitting required to make a satisfactory connection with the Work to be performed so as to leave the entire Work in finished and workmanlike condition. Furnish all labor and materials to this end, whether or not shown or specified. All measurements must be verified at the site.

F. Employ the original installer and fabricator, when possible, to perform cutting and patching for:

1. Weather-exposed or moisture-resistant elements.

2. Sight-exposed finished surfaces.

G. Execute fitting and adjustment or products to provide a finished installation to comply with the specified products, functions, tolerances and finishes.

H. **Contractor** shall restore Work which has been cut or removed and shall install new products to provide completed Work in accordance with the Contract Documents. Each **Contractor** will be responsible to pay the appropriate **contractor** as designated by Barton Malow Company for restoring any portion of the Project that is disturbed, including but not limited to, slabs, walls, ceilings, fire rated partitions, spray-on fireproofing, and finishes, to their original state as a result of **Contractor**'s action.

I. Refinish entire surfaces as the **Contractor**'s Work scope requires to provide an even finish to match adjacent surfaces and finishes.

1. For continuous surfaces, refinish to nearest intersection.

2. For an assembly, refinish the entire unit.

J. Removal and replacement of ceilings not scheduled to be replaced shall be the responsibility of the **Contractor** requiring access.

K. **Contractor** shall be held responsible for reckless cutting of holes in slabs, walls or other finishes, or for scraping off areas of fireproofing larger or greater than that which is necessary for installation of its Work.

END OF SECTION 01540

SECTION 01550
CLEAN-UP AND FINAL CLEANING

PART 1 - GENERAL

1.01 RELATED DOCUMENTS

A. Attention is directed to Division 0, Bidding and Contract Requirements, and to Division 1, General Requirements, which are hereby made a part of this Section.

1.02 SUMMARY

A. Execute final cleaning at completion of the Work, as required by this Section. For **Contractor**'s daily clean-up, dust control and rubbish removal operations during construction, refer to Section 01520 Temporary Construction Controls.

1.03 DISPOSAL REQUIREMENTS

A. Conduct final cleaning and disposal operations to comply with codes, ordinances, regulations, and anti-pollution laws.

1. Do not burn or bury rubbish and waste materials on Project site.
2. Do not dispose of volatile wastes such as mineral spirits, oil or paint thinner in storm or sanitary drains.

PART 2 - BARTON MALOW SITE CLEAN-UP/RUBBISH REMOVAL PROCEDURE

2.01 PURPOSE

A. An effective and efficient clean-up procedure on the Project site contributes to both the productivity and safety of all those involved. The following requirements are intended to provide a satisfactory and equitable method to manage and accomplish project clean up.

2.02 REQUIREMENTS

A. General: Each **Contractor** shall be responsible for daily, weekly and final clean-up of its Work and the work of its Subordinate Parties as defined herein. The cost of this requirement shall be included in the **Contractor**'s Bid Proposal. **Contractor** is required to comply with applicable labor agreements and jurisdictional rules in the hiring of laborers to perform its clean up obligations under the Contract Documents. Each **Contractor** will be responsible for control of dust generated by its operations on a daily basis. Roadways must be maintained clear of all debris at all times. **Contractors** shall only use cleaning materials which will not create hazards to health or property and which will not damage surfaces. Only those cleaning materials and methods recommended by the manufacturer of the surface material to be cleaned shall be used. Any sweeping compounds used in cleaning operations shall not leave residue on concrete floor surfaces that may affect installation of finish flooring materials.

B. Dumpsters: The **Owner** will provide and maintain the job site dumpsters for unidentifiable debris for use as specified below. Each **Contractor** and its Subordinate Parties shall be responsible for daily clean-up, removal and placement in dumpsters of all debris and waste resulting from its operations. No overfilling of dumpsters will be allowed. All adjacent areas are to be kept clean. Excavation, demolition, masonry, drywall and hazardous waste materials are NOT to be placed in Barton Malow Company's dumpster. Each **Contractor** will be responsible for removing its own excavation, demolition, masonry, drywall and Hazardous Materials from the site in strict accordance with applicable laws and regulations regarding disposal. **Contractor** shall indemnify, defend and hold harmless the Owner and Barton Malow Company from claims, damages, suits, costs, or expenses of

any kind (including attorney's fees and costs) arising out of, resulting from or in connection with **Contractor**'s misuse of dumpsters furnished by **Owner.**

C. Daily Clean Up: Each **Contractor** shall be responsible, DAILY for the clean-up, transport and removal from the site of identifiable debris including but not limited to, bulky debris, packaging, containers, unused materials and equipment, (i.e. masonry and concrete materials, drywall, steel, crates, carton, demolition debris, other packaging, and combustible items). No piles of debris shall be left in the building overnight. The cost of any overtime premium required to remove debris immediately at the end of each workday shall be included in the **Contractor**'s Base Bid.

Each **Contractor** must handle materials in a controlled manner during clean-up and all other operations so that dust and other contaminants resulting from the cleaning or disposal process will not affect the Owner's operations or equipment or the work or equipment of any other **Contractor** on the site. Each **Contractor** is responsible to leave its Work and work area in a clean condition. This includes, but is not limited to, removal of all grease, dust, dirt, stains, labels, fingerprints and other foreign matter.

D. Weekly Clean Up: Each **Contractor**, while on site, shall provide to Barton Malow Company one (1) person for each five tradesmen (or portion thereof) employed at the site, one day per week, for up to four (4) hours, for the exclusive purpose of performing overall project weekly clean-up of unidentifiable debris. The cost of this (these) person(s) shall be included in **Contractor**'s bid. The weekly clean-up Work shall include sweeping, loading and disposal of miscellaneous debris such as mud tracked through the building, drinking cups, bottles, lunch wrappers and other unidentifiable debris. Trash and debris from this operation shall be placed in the dumpster(s) provided by the Owner. Barton Malow Company will furnish sweeping compound to hold down dust during the weekly clean up.

E. Final Clean Up: Final clean-up, will be done at a time designated by Barton Malow Company. Normally, Final Clean Up will occur before punchlist inspection or prior Owner Occupancy turnover. The [Contractor/Subcontractor(s)] duties for Final Cleaning are set forth in Part 3.01 below.

F. Use of Owner's Facilities: The Owner's facilities are not to be used by **Contractor** for the disposal of trash or debris from its Work.

G. Failure to perform Clean Up: If any **Contractor** or its Subordinate Parties fails to maintain a satisfactory clean-up program, Barton Malow Company will issue written notice, to the responsible **Contractor**, that the necessary clean-up must be performed within twenty-four (24) hours after the notice is given. The establishment of a definite deadline for the removal of debris and rubbish will supersede the necessity for any formal notification that such work must be done. If **Contractor**(s) fail to perform the clean-up, by the deadline, Barton Malow Company may perform clean-up on the Project and back charge the responsible **Contractor**(s) for the costs. If necessary in order to remove unidentifiable debris beyond what is removed during weekly clean up, Barton Malow Company will perform such clean-up and shall pro-rate the cost among the **Contractors** in its discretion, based on **Contractor**(s) type of work and manpower on site. The minimum amount for any back charge by Barton Malow, if implemented, will be **$500.00**. Back charges may be deducted from the monthly invoices of the [Contractor/Subcontractor(s)] and/or final payment.

H. Hazardous Materials: **Contractors** or Subordinate Parties must dispose of Hazardous Materials in strict accordance with applicable federal, state, and local laws and regulations. Hazardous Materials may not be placed in dumpsters and/or containers not so designated for such placement.

PART 3 - EXECUTION

3.01 FINAL CLEANING

A. The **CONTRACTOR** will employ an adequate number of personnel for final cleaning. Final Cleaning consists of the following Work:

1) Removal of grease, mastic, adhesives, dust, dirt, stains, fingerprints, labels, and all other foreign materials from sight-exposed interior and exterior surfaces.

2) Vacuuming all carpets and spot cleaning any stains. Cleaning and waxing VCT floors.

3) Washing and shining glazing and mirrors.

4) Polishing glossy surfaces to a clear shine.

5) Dusting cabinet work and removing foreign markings.

6) Broom cleaning exterior paved surfaces and raking clean other surfaces of the grounds.

B. In addition to the tasks set forth above, each **Contractor** shall be responsible for the following for its Work.

1) Prior to final completion or Owner occupancy, whichever occurs first, **Contractor** shall conduct an inspection of sight-exposed interior and exterior surfaces, and all Work areas, to verify that the entire Work is left in a broom clean condition and that all Final Cleaning as set forth above has been performed.

2) Tunnels and closed off spaces shall be cleaned of packing boxes, wood frame members and other waste materials used in the construction.

3) The entire system of piping and equipment shall be cleaned internally. **Contractors** installing piping or equipment shall open all direct pockets and strainers, completely blowing down as required by the technical specifications and the manufacturers' instructions, and shall clean strainer screens of all accumulated debris.

4) Tanks, fixtures and pumps shall be drained and proved free of sludge and accumulated matter.

5) Temporary labels, stickers and similar items shall be removed from fixtures and equipment. Unless otherwise directed in the technical specifications, **Contractors** shall not remove permanent name plates, equipment model numbers, ratings, or other items intended to be permanently affixed to the fixture or equipment.

6) Heating and air conditioning equipment, tanks, pumps and traps shall be thoroughly cleaned and new filters or filter media installed.

7) Before being placed in service, domestic water distribution systems, including those for cold water, drinking water and the hot water system shall be chlorinated. Review Technical Specifications for Products and Procedures.

END OF SECTION 01550

SECTION 01600
FORMS

PART 1 - GENERAL

1.01 RELATED DOCUMENTS

A. Specific attention is directed to all Bidding and Contract Requirements, and to Division 1, General Requirements, which are hereby made a part of this Section and relate to various forms referenced for the project.

1.02 USE OF FORMS

A. Upon award of the Agreement, the various forms described and referenced in the Project Manual will be provided by Barton Malow Company and therefore are bound in the Project Manual.

1. Copies of forms are available for inspection at Barton Malow Company, 1301 Boyd, Troy, MI 48083.

00620 Insurance

- Certificate of Insurance (ACORD) Form

00810 Safety and Loss Control Program

- Trade Contractor Safety Certificate **(CON.7.9)**

01290 Payment Procedures

- Application and Certificate for Payment **(CON.27.1)** and Continuation Sheet **CON.27.2 – Not Included**
- Consent of Surety to Reduction In or Partial Release of Retainage **(CON.26.6) – Not Included**
- Payment schedule **(PSI.10.1)**
- Payment Request for Stored Materials Form **(CON.26.5)**
- Acknowledgment of Payment and Partial Unconditional Release Form **(CON.26.3)**
- Unconditional Final Release and Waiver Subcontractor/Materialman Form **(CON.26.4)**
- Sworn Statement Form **(CON.26.2)**

01250 Changes in the Work

- PCO- Notice to Proceed
- PC0- Quotation Only
- Change Order Form **(CMS.9.1 or CMS.9.2)**

01320 Communications

- Trade Contractor's Daily Report Form **(CON.14.4)**
- Request For Information Form **(CON.25.2)**

01330 Submittals

- BMC Submittal Transmittal Form **(CON.9.6)**

01400 Quality Requirements

- **Corrective Action Report (CAR)/Notice of Non-Conformance (NCR) (CON.18.2)**

01700 Contract Close-out

- Consent of Surety Company to Final Payment Form **(CON.26. 7) – Not Included**
- Consent of Surety to Reduction in or Partial Release of Retainage Form **(CON.26.6) – Not Included**
- **Certificate of Contract Completion Form (CLO.7.5)**

01720 Project Record Documents

- **Closeout Submittal (CLO.7.2)**

01740 Warranties and Guarantees

- **Contractor's Guarantee (CLO.7.3)**

01750 Systems Demonstration, Training and Start-up

- **Equipment/Systems Acceptance Form (CLO.2.1)**
- **Owner Training Register (CLO.2.2)**

END OF SECTION 01600

BARTON MALOW COMPANY

TRADE CONTRACTOR SAFETY CERTIFICATE

Contractor Name _____

Project Name Phase I - Three Middle Schools Remodeling & Addition

Project Number 041049 - BP #9361

Nature of work (e.g., masonry, drywall) _____

1. Does Contractor have a written safety plan applicable to this Project?
   ☐ Yes (attach copy); or ☐ Will be provided before on-site work begins.

2. Contractor agrees to follow on this Project (for itself and its subs at any tier):
   a. All applicable legal standards for safety, including OSHA regulations;
   b. Any Site Specific Safety Rules furnished for this Project;
   c. 100% fall protection at elevations over six feet;
   d. NCCCO certification for all crane operators;
   e. Job Hazard Analysis to plan for safety before each work task begins;
   f. Prompt reporting of all OSHA recordable and lost time injuries, plus monthly reports of work hours and incident rates;
   g. Commitment of adequate management and financial resources to assure safety compliance and enforcement.
   ☐ Yes (no other alternative).

3. Contractor expects to encounter the following potential hazards on this Project, and its written safety plan contains appropriate provisions to address them:

	Potential Hazard	***Yes***	***No***	***Name the Competent Person****
1	Work from heights (ladders, edges, etc.)	☐	☐	
2	Scaffold erection or use	☐	☐	
3	Aerial work platforms	☐	☐	
4	Energized equipment (electrical, etc.)	☐	☐	
5	Respirator use	☐	☐	
6	Confined space work	☐	☐	
7	Trenching/excavation	☐	☐	
8	Cranes, fork trucks, or heavy equipment	☐	☐	
9	Environmental hazards	☐	☐	
10	Fire or explosion hazards	☐	☐	
11	Aircraft or watercraft use	☐	☐	
12	Other (specify):	☐	☐	

** Where applicable, properly qualified and trained individual who will assure compliance with pertinent standards, procedures, and/or training requirements.*

4. Contractor has established procedures for handling first aid and other occupational injuries including medical and fire emergencies.

Name of person certified in first aid and CPR: _____

I certify that the above information is correct, and I accept responsibility for implementing and enforcing the safety plan on this Project.

Contractor's Representative	***Phone Number***	***Date***

DRAFT

AIA® Document G702/CMa™ – 1992

Application and Certificate for Payment Construction Manager-Adviser Edition

TO OWNER:	Troy School District 4400 Livernois Troy, MI 48098	**PROJECT:**	Phase I - Three Middle Schools Remodeling & Addition Boulan Park Middle School, Larson Middle School, Smith Middle School,	**APPLICATION NO:** 001 **PERIOD TO:**	**Distribution to:** OWNER: ☐ CONSTRUCTION MANAGER: ☐ ARCHITECT: ☐
FROM CONTRACTOR:		**VIA CONSTRUCTION MANAGER:**	Barton Malow Company	**CONTRACT DATE:** **PROJECT NOS:** 2643-012 / / BP #9361	CONTRACTOR: ☐ FIELD: ☐ OTHER: ☐
CONTRACT FOR:	General Construction	**VIA ARCHITECT:**	Kingscott, Architecture, Engineering, Interiors Design		

CONTRACTOR'S APPLICATION FOR PAYMENT

Application is made for payment, as shown below, in connection with the Contract.
Continuation Sheet, AIA Document G703, is attached.

1. ORIGINAL CONTRACT SUM	$	0.00
2. Net change by Change Orders	$	0.00
3. CONTRACT SUM TO DATE (Line 1 ± 2)	$	0.00
4. TOTAL COMPLETED & STORED TO DATE (Column G on G703)	$	0.00
5. RETAINAGE:		
a. 0 % of Completed Work (Column D + E on G703)	$	0.00
b. 0 % of Stored Material (Column F on G703)	$	0.00
Total Retainage (Lines 5a + 5b or Total in Column I of G703)	$	0.00
6. TOTAL EARNED LESS RETAINAGE (Line 4 Less Line 5 Total)	$	0.00
7. LESS PREVIOUS CERTIFICATES FOR PAYMENT (Line 6 from prior Certificate)	$	0.00
8. CURRENT PAYMENT DUE	$	0.00
9. BALANCE TO FINISH, INCLUDING RETAINAGE (Line 3 less Line 6)	$	0.00

CHANGE ORDER SUMMARY	ADDITIONS	DEDUCTIONS
Total changes approved in previous months by Owner	$ 0.00	$ 0.00
Total approved this Month	$ 0.00	$ 0.00
TOTALS	$ 0.00	$ 0.00
NET CHANGES by Change Order	$ 0.00	

The undersigned Contractor certifies that to the best of the Contractor's knowledge, information and belief the Work covered by this Application for Payment has been completed in accordance with the Contract Documents, that all amounts have been paid by the Contractor for Work for which previous Certificates for Payment were issued and payments received from the Owner, and that current payment shown herein is now due.

CONTRACTOR:

By: _____ Date: _____

State of:

County of:

Subscribed and sworn to before me this day of

Notary Public:

My Commission expires:

CERTIFICATE FOR PAYMENT

In accordance with the Contract Documents, based on on-site observations and the data comprising this application, the Construction Manager and Architect certify to the Owner that to the best of their knowledge, information and belief the Work has progressed as indicated; the quality of the Work is in accordance with the Contract Documents, and the Contractor is entitled to payment of the AMOUNT CERTIFIED.

AMOUNT CERTIFIED ..... $ 0.00

(Attach explanation if amount certified differs from the amount applied. Initial all figures on this Application and on the Continuation Sheet that are changed to conform with the amount certified.)

CONSTRUCTION MANAGER:

By: _____ Date: _____

ARCHITECT:

By: _____ Date: _____

This Certificate is not negotiable. The AMOUNT CERTIFIED is payable only to the Contractor named herein. Issuance, payment and acceptance of payment are without prejudice to any rights of the Owner or Contractor under this Contract

AIA Document G702/CMa™ – 1992. Copyright © 1992 by The American Institute of Architects. All rights reserved. WARNING: This AIA® Document is protected by U.S. Copyright Law and International Treaties. Unauthorized reproduction or distribution of this AIA® Document, or any portion of it, may result in severe civil and criminal penalties, and will be prosecuted to the maximum extent possible under the law. This draft was produced by AIA software at 14:35:10 on 11/16/2006 under Order No.1000224973_1 which expires on 3/1/2007, and is not for resale.
User Notes: (1813604468)

DRAFT

AIA® Document G703™ – 1992

Continuation Sheet

AIA Document G702, APPLICATION AND CERTIFICATION FOR PAYMENT, containing Contractor's signed certification is attached.
In tabulations below, amounts are stated to the nearest dollar.
Use Column I on Contracts where variable retainage for line items may apply.

APPLICATION NO: 001
APPLICATION DATE:
PERIOD TO:
ARCHITECT'S PROJECT NO: 2643-012

A	B	C	D	E	F	G		H	I
ITEM NO.	DESCRIPTION OF WORK	SCHEDULED VALUE	WORK COMPLETED FROM PREVIOUS APPLICATION (D + E)	WORK COMPLETED THIS PERIOD	MATERIALS PRESENTLY STORED (NOT IN D OR E)	TOTAL COMPLETED AND STORED TO DATE (D+E+F)	% (G ÷ C)	BALANCE TO FINISH (C - G)	RETAINAGE (IF VARIABLE RATE)
	GRAND TOTAL	$ 0.00	$ 0.00	$ 0.00	$ 0.00	$ 0.00	0.00 %	$ 0.00	$ 0.00

AIA Document G703™ – 1992. Copyright © 1963, 1965, 1966, 1967,1970, 1978, 1983 and 1992 by The American Institute of Architects. All rights reserved. WARNING: This AIA® Document is protected by U.S. Copyright Law and International Treaties. Unauthorized reproduction or distribution of this AIA® Document, or any portion of it, may result in severe civil and criminal penalties, and will be prosecuted to the maximum extent possible under the law. This draft was produced by AIA software at 14:38:05 on 11/16/2006 under Order No.1000224973_1 which expires on 3/1/2007, and is not for resale.
User Notes:

CONSTRUCTION PAYMENT SCHEDULE

(1) For work in place through the 20th of the month
(2) If required documentation is complete and performance is justified for release

YEAR/ MONTH	TRADE CONTRACTOR ROUGH DRAFT (1) PAYMENT APPLICATION (Due Date)	TRADE CONTRACTOR FORMAL PAYMENT (1) APPLICATION DUE DATE (To BMC - 1301 Boyd Rd Troy, MI)	DISTRIBUTE CHECKS (2) TO TRADE CONTRACTORS
2007			
January	19	25	TBD
February	20	23	TBD
March	20	23	TBD
April	20	25	TBD
May	18	25	TBD
June	20	25	TBD
July	20	25	TBD
August	20	24	TBD
September	20	25	TBD
October	19	25	TBD
November	20	26	TBD
December	20	26	TBD
2008			
January	18	25	TBD
February	20	25	TBD
March	20	25	TBD
April	18	25	TBD
May	20	23	TBD
June	20	25	TBD
July	18	25	TBD
August	20	25	TBD
September	19	25	TBD
October	20	24	TBD
November	20	25	TBD
December	19	26	TBD

Barton Malow Company

PAYMENT REQUEST FOR STORED MATERIAL

To: _____

_____

_____

From _____
(Name of Contractor)

Project: Phase I - Three Middle Schools
Remodeling & Addition
(Boulan Park, Larson & Smith)
BID PACK #9361

Contract No. _____

Payment Application No. _____

Period: From _____ To: _____

In accordance with the provisions of the payment to contractor section of the contract general conditions, request is made for payment as "stored materials" for the following materials.

ITEM NO.	QTY.	MATERIAL DESCRIPTION	VALUE	TYPE OF SUBSTANTIATING EVIDENCE OF PURCHASE ATTACHED	WHERE STORED (*)

AFFIDAVIT:

The materials listed above have been purchased exclusively for use on the above referenced project. The material is separated from other like materials and is physically identified as our property for use only on contract no _____
The owner or owner authorized representative may enter upon the premises for the purpose of inspection, checking or auditing, or for any other purpose as it considers necessary. It is expressly understood and agreed that this information and affidavit is furnished to the owner for the purpose of obtaining payment of the above materials before they are delivered to, or incorporated into the project described above. A revised form showing the current status of the value of materials for which payment is being requested will be submitted each estimate period.

_____ signed _____ date _____

name of contractor _____

State of _____ county of _____

Subscribed and sworn to before me this _____ day of _____ 20

_____ _____
(Notary Public) (Commission Expires)

* when stored at a location other than on the jobsite or at a fabricator's yard, bonded warehouse receipt for the material and a certificate of insurance showing coverage of materials stored issued in the name of the owner, shall accompany the request for payment. In case the storage location (other than the jobsite or fabricator's yard) is the contractor's property, the area containing the material within the fence area is the property of the owner. The responsibility for protecting the materials remains that of the contractor.

Instruction to contractor

Submit this form with each required copy of aia document g702. Attach evidence of purchase (and warehousing receipts when required), along with proof of insurance of bonded warehouse to original.

ACKNOWLEDGEMENT OF PAYMENT AND PARTIAL UNCONDITIONAL RELEASE

JOB NO.: 041049 - BP #9361

FOR WORK INVOICED THROUGH: **DATE:** _____

In consideration of the payment of the below referred to check and other good and valuable consideration, the receipt of which is hereby acknowledged, the undersigned subcontractor warrants that all labor, material or equipment and any associated taxes, wages or fringe benefits furnished by subcontractor in and for the erection, construction ornamentation or improvement of a building and/or structure described as: as situated at has been fully paid for by subcontractor and that there are no amounts unpaid in favor of its subcontractors or material suppliers or any other persons furnishing labor, equipment or material to subcontractor and utilized in the performance of the contract(s) of the above described project. Subcontractor does hereby acknowledge that payment to the undersigned has been received for all such supervision, services, supplies, labor and/or materials directly and indirectly supplied for such improvement by the undersigned to the extent of that amount stated below and relinquishes and waives its rights to all construction or mechanic's liens, claims of liens, or liens or claims of any nature and all labor and material bond rights, and forever release and discharge Barton Malow Company, its successors and assignees to the extent of this amount and regarding activities on the noted contract to this date. This certificate is required in your contract(s).

Contract No.: _____ with _____

Amount of this Payment: _____

Check Number _____

Accumulated Payment to Date: _____

Company: _____

:

By: _____

Title _____

Date _____ Phone No. _____

Witnessed By: _____

Barton Malow Company

UNCONDITIONAL FINAL RELEASE AND WAIVER TRADE CONTRACTOR/SUBCONTRACTOR/MATERIALSUPPLIER

VENDOR NO. _____

CONTRACT/SUBCONTRACT/ORDER NO. _____

JOB NO. 041049-BP #9361

TOTAL CONTRACT AMOUNT

AMOUNT OF FINAL CHECK _____

The Contractor/Subcontractor/Material Supplier, _____, on behalf of itself, its successors and assigns (collectively, the "Contractor"), in consideration of payment in full of the Contract Amount listed above and other valuable consideration, receipt of which is hereby acknowledged, hereby waives, releases and forever discharges Owner, Barton Malow Company, and Barton Malow Company's surety providing a payment bond for the Project (if applicable), and their respective officers, agents, employees, representatives, affiliates, successors and assigns (the "Released Parties"), from any and all claims, actions, causes of action, debts, liens, stop notice or bond rights, demands, suits, liabilities, judgments, damages, or expenses, whether known or unknown, which the Contractor now has or may have in the future, arising out of or in connection with work performed and/or materials, supplies or equipment furnished for the improvement of the Project.

Project Name _____
Project Address _____

under its Contract/Subcontract/Order with either Owner or Barton Malow Company dated _____ , including any additional work or labor performed and/or materials, supplies or equipment provided at the written or oral request of, or with the express or implied consent of Owner and/or Barton Malow Company, except for the disputed claims that are noted on the reverse side of this waiver, in the aggregate amount of $_____.

The Contractor, on behalf of itself, its successors and assigns, further agrees to defend, indemnify and hold harmless the Released Parties, from and against any and all claims, actions, causes of action, debts, liens, stop notice or bond rights, demands, suits, liabilities, judgments, damages or expenses ("Claims"), including all attorneys fees and costs, whether arising out of injury or damage to person or property in connection with the work performed on the Project, or whether arising from claims by the Contractor's subcontractors, material suppliers, laborers, or their unions or union benefit plans for non-payment of materials, services, labor, or equipment, except for Claims caused by the sole negligence of a Released Party.

The Contractor certifies the following: (1) there has been no assignment or other transfer of its interest arising from the Contract/Subcontract; (2) the work performed by the Contractor has been completed in full accordance with the terms and conditions set forth in the Contract/Subcontract/Order; and (3) all the Contractor's subcontractors, laborers and material suppliers, have been paid in full for their work under the Contract/Subcontract/Order, including, but not limited to taxes, wages and fringe benefits for which previous payments were received by the Contractor.

The obligations of the Contractor under this Unconditional Final Release and Waiver are in addition to, and not in lieu of, the Contractor's continuing obligations under the Contract/Subcontract/Order and nothing in this Unconditional Final Release and Waiver shall be construed to modify such obligations.

The person executing this Unconditional Final Release and Waiver on behalf of the Contractor represents and warrants that he/she is duly authorized and empowered to sign and execute this Unconditional Final Release and Waiver on his/her own behalf and on behalf of the Contractor.

Signed this _____ day of _____ 20 Company _____

State of _____ by: _____
(signature)

County of _____ its _____
(corporate or company officer)

On this _____ day of _____ 20 before me came _____,

to me known, who being by me duly sworn did depose and say that he/she resides in _____

and that he/she is the _____ of the corporation described herein and which executed the above instrument.

_____
(notary public)

_____
(notary seal)

_____
(expiration date)

*strike through titles not applicable

SWORN STATEMENT

STATE OF: _____)
)ss.
COUNTY: _____)

_____ Being duly sworn, deposes and says or affirms that _____

is the (contractor) (subcontractor) for an improvement to the following described real property situated in _____ county, _____
described as follows (insert legal description)

_____

_____

_____

_____

_____ Contract # _____

That the following is a statement of each subcontractor and supplier and laborer (for which laborer the payment of wages and/or fringe benefits and withholdings may be due), with whom the (contractor) (subcontractor) has (contracted) (subcontracted) for performance under a contract for the benefit of an owner or lessee, and that the amounts due to the persons as of the date hereof are correctly and fully set forth opposite their names as follows:

* (Some columns are not applicable to all persons listed)

Name of Subcontractor supplier, or laborer (list items over $1000 only)	MC*	Type of improvement or material furnished	Total Contract Price	Amount previously paid	Amount currently owing	Balance to complete	Amount of laborer wages due but unpaid	Amount of laborer fringe benefits and withholdings due but unpaid
All items that are not specifically listed are under $1000 and have been paid in full.								
		TOTAL	$ -	$ -	$ -	$ -	$ -	$ -

Contractor states that all supplies used, except those specifically provided for this project and listed above, have been taken from inventory and payments to these suppliers are current.

Contractor further states that the following are paid in full to date ☐ union contributions all ☐ obligations

*MC= Minority Code: 1) Enter one of the following codes: 1=African American 2=Hispanic 3=Asian American 4= Native American 5=WBE
2) Also enter one of the following to describe how company determined its MBE/WBE status: A=Self-declared B=Certified by one of the affiliates of NMSDC C= Certified by public entity.
3) Example: 1A means company is a self-declared African American entity

Barton Malow Company

Change Order

PROJECT *(Name and address)*	**CHANGE ORDER NUMBER:** **DATE:** **ARCHITECT'S PROJECT NUMBER:**	OWNER ☐ ARCHITECT ☐ CONTRACTOR ☐
TO CONTRACTOR: *(Name and address)*	**CONTRACT DATE:** **CONTRACT FOR:**	FIELD ☐ OTHER ☐

THE CONTRACT IS CHANGED AS FOLLOWS:

(Include, where applicable, any undisputed amount attributable to previously executed Construction Change Directives)

The original (Contract Sum) (Guaranteed Maximum Price) was $
The net change by previously authorized Change Orders $
The (Contract Sum) (Guaranteed Maximum Price) prior to this Change Order was $
The (Contract Sum) (Guaranteed Maximum Price) will be (increased) (decreased) (unchanged) by this Change Order in t
the amount of $
The new (Contract Sum) (Guaranteed Maximum Price) including this Change Order will be $
The Contract Time will be (increased) (decreased) (unchanged) by ( ) days
The date of Substantial Completion as of the date of this Change Order therefore is

NOTE: This Change Order does not include changes in the Contract Sum, Contract Time or Guaranteed Maximum Price which has been authorized by Construction Change Directive or which the cost or time are in dispute as described in Subparagraph 7.3.8 of AIA Document A201.

Not valid until signed by the Architect, Contractor and Owner.

ARCHITECT *(Typed Name)*	**CONTRACTOR** *(Typed Name)*	**OWNER** *(Typed Name)*
(Signature)	*(Signature)*	*(Signature)*
BY	**BY**	**BY**
DATE	**DATE**	**DATE**

Sample Created by Community Approved Software

Barton Malow Company

TRADE CONTRACTOR DAILY REPORT

DATE _____ **PROJECT NUMBER:** 041049-BP#9361

PROJECT NAME/SITE: Phase I - Three Middle Schools Remodeling & Addition

ROUTING *To:* Barton Malow Superintendent _____

From: Contractor Name/Field Rep _____

Scope Description _____

WEATHER CONDITIONS

External (Check appropriate box)

Sunny☐ Cloudy☐ Rain☐ Windy☐ Snow☐

Ground (Check appropriate box)

Dry☐ Wet☐ Muddy☐ Frozen☐

Temperature Range

Hig ° Low °

SAFETY ISSUES

Accidents / Incidents	*No*	*Yes*	*If yes, explain*
Personnel	☐	☐	
Equipment	☐	☐	
Property	☐	☐	

CHECK ONE THAT APPLIES:

☐ **No Exceptions Noted Today** ☐ **Non-Conformance Report Written**

VISITORS ON SITE

MAJOR MATERIAL RECEIVED

CLEAN-UP

Have you accumulated and properly disposed of the spoils from today's work activities? ☐ Yes ☐ No

EQUIPMENT ARRIVAL / DEPARTURE

DESCRIPTION OF DAILY CONTRACTOR ACTIVITIES	WORKFORCE TRADE	TOTAL
New Work Started	Clerical/Office	
	Supervision/Mgt	
	Carpenters	
Work Activities In Progress	Communications/Data	
	Concrete Finishers	
	Electricians	
	Elevator	
Work Completed	Flooring, Res/Carpet	
	Glaziers	
	Insulators	
Information Requested	Iron Workers	
	Laborers	
	Masons/Stone	
Is your work on schedule? ☐ Yes ☐ No	Millwrights/Riggers	
	Operators	
	Painters	
Impacts to Work In Progress	Pipefitters	
	Plasterers	
	Plumbers	
Additional Work	Re-Steel	
	Roofing/Waterproofing	
	Sheet Metal	
Coordination Issues	Sprinkler Fitters	
	Surveyors	
	Terrazzo/Tile Setters	
Quality Issues	Truck Drivers	
	Others:	
Information included on this form shall not constitute the required notification of delay, disruption, or claim.		
And requests for additional costs and/or time shall be submitted in accordance with the terms of the contract.	TOTAL	

Barton Malow Company

Barton Malow

Design/Construction Services

BARTON MALOW COMPANY
1301 Boyd
Troy, MI 48083
Phone: 248-823-4631
Fax: 248-823-4672

RFI

Date: _____ RFI #: _____

To: _____ Contractor's Reference #: _____

_____ Project Phase I - Three Middle Schools

_____ Remodeling & Addition

VIA Barton Malow Company BMC Project #: 041049

_____ A/E Project #: 2643-12

_____ Bid Package #: 9361

Bid Category #: _____

From: _____ Return to: _____

Reference Specs: _____ Reference Drawings: _____ Rev. _____

Request: _____

Contractor or Subcontractor	Submitted By	Date
Barton Malow Company	Reviewed By	Date

Reply: _____ Attachments:

This clarification is interpreted to be within the scope of referenced contracts issued in accordance with the Contract Documents, and without change in Contract Sum or Contract Time, and, as such, is not an authorization for work beyond the scope of the contract.

Architect/Engineer	Reply By	Date

RFI Response Posted on Drawings _____

Contractors Copied _____

SUBMITTAL TRANSMITTAL FORM

To be filled out by **CONTRACTOR**

Date: _____ Project Name: _____

Contractor _____ Contract for: _____

By: _____ Phone: _____

Check Type of Submittal: Spec. Section _____

☐ Transparency

☐ Non-Transparency Reproducible

☐ Other

Contractor Submittal No. _____

(To be filled in by Barton Malow)

Copies/Type	Sheet Number	Submittal Description (include manufacturer)

To be filled out by **BARTON MALOW**

Date: _____ Remarks: _____

To: _____

Attn: _____

From: _____

☐ Copy to Owner

To be filled out by **ARCHITECT/ENGINEER**

Date: _____ Remarks: _____

To: _____

Attn: _____

From: _____

☐ Approved ☐ Approved as Noted

☐ Not Approved/Resubmit ☐ Reviewed

BARTON MALOW COMPANY

CORRECTIVE ACTION REPORT (CAR)

Project: _____ Date _____

Company/Location: _____ CAR No. _____

Initiated By: _____ Tag No./Hold Area: _____ (as applicable)

Previous CAR # / Date: _____

CAR Designation: ☐ Audit Deficiency Report ☐ Site Level–NCR ☐ Customer Satisfaction ☐ Corporate Procurement ☐ Tech / FF&E - NCR

FINDING/NONCONFORMITY: Deficiency Classification: ☐ Major ☐ Minor ☐ OFI

Location: _____

Requirement (Standard or Specification): _____

Finding / Nonconformity: _____

Date: _____

Recommended Disposition: ☐ Use-As –Is ☐ Rework ☐ Reject ☐ N/A

Statement of Disposition: _____

Expected Completion Date: _____

Disposition Submitted By: _____ Date: _____

Disposition Reviewed/Approved By: _____ Date: _____

Owner/Customer Representative: _____ Date: _____

(NOTE: If contractually required, Owner/Customer concurrence required for USE-AS-IS or Rework Disposition)

ROOT CAUSE / CORRECTIVE ACTION: _____

Company Representative: _____ Expected Completion Date: _____

Date: _____

REVIEW OF CORRECTIVE ACTION: ☐ Accepted ☐ Accepted/Need Verification ☐ Rejected

Reason for Rejection _____

BMC Representative: _____ Date: _____

Owner/Customer Representative: _____ Date: _____
(as required)

Distribution: Lead Auditor – Process Improvement Department (excludes Site Level – NCR)

CERTIFICATE OF CONTRACT COMPLETION

Project: Phase I - Three Middle Schools Remodeling & Addition

Contractor:

Contract for:

Contract Date: Contract Amount: $

Construction Manager's Affidavit

I solemnly swear and affirm: That the work under the above named contract and all amendments thereto has been completed in accordance with the requirements of said contract; that all costs incurred for equipment, materials, labor, welfare and fringe benefits, insurance, and services against the project have been paid; that no liens have been attached against the project; that no suits are pending by reason of work on the project under the contract; that all Workmen's Compensation claims are covered by Workmen's Compensation insurance as required by law; that all public liability claims are adequately covered by insurance, and that the Contractor shall save, protect, defend, indemnify, and hold the Owner harmless from and against any and all claims which arise as a direct or indirect result of any transaction, event or occurrence related to performance of the work contemplated under said contract.

Construction Manager: _____

Title:

State of:

County of:

Personally appeared before me this day of 20

known (or made known) to me to be the

(Owner) (Partner) (Corporate Officer Title)

of

Contractor(s) who, being by me duly sworn, subscribed to the foregoing affidavit in my presence.

Notary Public:

Commission expires:

CLOSEOUT SUBMITTAL

Project Phase I - Three Middle Schools Remodeling & Addition

(Boulan PArk, Larson & Smith)

Contractor: _____

Contract #: _____

Location: _____

Bid Package #: 9361

Description _____

The above named contractor is submitting the following for Barton Malow, Architect and Owner approval and use. *Check all appropriate:*

- ☐ As-Built Drawings
- ☐ Operation and Maintenance Manuals
- ☐ Maintenance Stock/Spare Parts
- ☐ Keys
- ☐ Contract Guarantee
- ☐ Special Guarantee/Warranty
- ☐ Other (Specify) _____

Reference:

Specifications _____ Section: _____ Page _____

Description: _____

Contractor: _____

Submitted by: _____

Barton Malow:

Received/Reviewed By: _____ Date: _____

Architect: _____ **(Specify Name)**

Received/Reviewed By: _____ Date: _____

Owner: _____

Received/Reviewed By: _____ Date: _____

Barton Malow Company

CONTRACTOR'S GUARANTEE

STATE OF _____)
) SS
County of _____)

Project: Phase I - Three Middle Schools Remodeling & Addition
Project No.: 041049 - BP#9361
Owner: _____

TO ALL WHOM IT MAY CONCERN:

_____ of the City of _____ County of _____ and State of _____ being duly sworn, deposes and says that s/he is _____ of _____ (the "Contractor") and, being duly authorized, makes this statement and guarantee on its behalf; that the Contractor, in completing the performance of a certain (check one) ☐Subcontract Order # _____ with Barton Malow Company or ☐ Contract with Owner (the "Contract") for the Project, warrants that all of its Work under the Contract is of good quality and new, unless otherwise required or permitted by the Contract, and that the Work is free of defects and that the Work complies with the requirements of the Contract, including all documents incorporated into the Contract by reference. If within _____ _____ year[s] after the date of Substantial Completion of the Project or designated portion of the Project, any of Contractor's Work is found to be defective or not otherwise in accordance with the requirements of the Contract, Contractor shall correct the Work at its sole expense promptly after receipt of written notice from the Owner or Barton Malow Company, including any other Work affected in correcting such defective or nonconforming Work (the "Correction Period"). The Correction Period shall be extended with respect to portions of the Work first performed after Substantial Completion by the period of time between Substantial Completion and the actual performance of Contractor's Work, and for an additional Correction Period following any correction. This obligation shall survive acceptance of the Work and termination of the Contract.

This Guarantee shall be in addition to the terms of any other warranty or longer period of obligation specified in the Contract, including all documents incorporated therein, or the terms of any general warranty, and is not in lieu of any of them. This Guarantee shall not be construed to establish a period of limitation with respect to other obligations, which the Contractor might have under the Contract and has no relationship to the time within which the obligation to comply with the Contract may be sought to be enforced or to the time, which any proceeding may be commenced.

Trade or Work	Guarantee Period Commencement Date

_____
Subcontractor

By: _____
Title

Subscribed and sworn to before me this

_____ day of _____ A.D. 20__

_____
Notary Public

in and for _____ County _____

My commission expires: _____

EQUIPMENT/SYSTEMS ACCEPTANCE

Phase I - Three Middle Schools Remodeling & Addition
(Name of Project and Location)

CONTRACTOR: _____ **CONTRACT #:** _____

BID PACKAGE #: 9361 **DESCRIPTION:** _____

REPORT DATE: _____

Equipment/System Designation Model # _____

Serial # _____ Near Column Lines _____ and _____

Location: _____ Level: _____

Operation Observed By: _____

Test/Inspection Observed By: _____

Date of Inspection:. _____ Time _____ ☐ AM ☐ PM

The above equipment is being turned over to the Owner for start of guarantee period, commencing (___/___/___). Maintenance and operation after this date are subject to the following conditions:

Incomplete Work List Attached: _____

Accepted: Owner's Name: _____
By: _____ (Signature)
Date: _____

Acknowledged: Architect's Name _____
By: _____ (Signature)
Date: _____

Acknowledged: Barton Malow Company
By: _____ (Signature)
Date: _____

Distribution:

OWNER TRAINING REGISTER

Phase I - Three Middle Schools Remodeling & Addition

(Name of Project and Location)

DATE OF TRAINING: _____

CONTRACTOR: _____ **CONTRACT #:** _____

EQUIPMENT/SYSTEM DESCRIPTION: _____

Reference:

Specifications: _____ Section: _____ Page: _____

Manufacturer(s): _____

Location: _____

PARTICIPANTS

Barton Malow: _____

Architect: _____

Contractor/Manufacturer: _____

Owner: _____

TRAINING COMPLETED IN ACCORDANCE WITH CONTRACT REQUIREMENTS

Contractor: _____ Date: _____

Barton Malow: _____ Date: _____

Owner: _____ Date: _____

Attendees' Signatures:		

Distribution:

SECTION 01630
PRODUCT SUBSTITUTIONS

PART 1 - GENERAL

1.01 RELATED DOCUMENTS

A. Attention is directed to Bidding and Contract Requirements, and to Division 1, General Requirements, which are hereby made a part of this Section.

1.02 WORK INCLUDED

A. Furnish and install Products specified, under options and conditions for substitutions stated in this Section.

1.03 BIDDER'S OPTIONS

A. For products that are specified only by reference standard, select Product meeting that is standard by any manufacturer.

B. For Products specified by naming several Products or manufacturers, select any one of products and manufacturers named which complies with Specifications.

C. For Products specified by naming several Products or manufacturers and stating "or equivalent", or "or equal", or "or Architect approved equivalent", or similar wording, submit a request as for substitutions, for any Product or manufacturer which is not specifically named for review and approval by the Architect.

D. For Products specified by naming only one Product and manufacturer, there is no option and no substitution will be allowed.

PART 2 - SUBSTITUTION PROCESS

2.01 SUBSTITUTIONS

A. Base Bid shall be in accordance with the Contract Documents.

B. 1. Substitutions for products may be made during the bidding period by submitting completed Substitution Request Form and substantiating product data/literature a minimum of ten (10) Days prior to Bid date to Barton Malow Company who will then forward to the Architect.

2. Architect will consider requests from the Bidder for substitution of products in place of those specified as set forth in this section.

3. Those submitted the specified calendar days prior to Bid Date will be included in an addendum if acceptable.

4. After the end of the bidding period, requests will be considered only in case of Product unavailability or other conditions beyond the control of Contractor.

5. Bid Proposals shall not be based on assumed acceptance of any item which has not been approved by addendum.

C. Bidders are required to submit a separate Substitution Request Form for each proposed substitution. Each substitution request should be accompanied by the following supporting documentation:

1. A full explanation of the proposed substitution.

2. Complete data substantiating compliance of the proposed substitution with the requirements stated in the Contract Documents.

   a. Product identification, including the manufacturer's name and address.
   b. Manufacturer's literature identifying:
      1) Product description and technical information.
      2) Reference standards.
      3) Performance and test data.
      4) Installation instructions, operating procedures and other like information.
   c. Samples, as applicable.
   d. Names and addresses of similar projects on which product has been used, and date of each installation.

3. Itemized comparison of the proposed substitution with the product specified, listing all significant variations.

4. Data relating to changes in delivery or construction schedule.

5. A list of all effects of the proposed substitution on separate contracts.

6. Accurate cost data comparing the proposed substitution with the product specified.
   a. Amount of any net change to Contract Sum.

7. Designation of required license fees or royalties.

8. Designation of availability of maintenance services and sources of replacement materials.

D. Substitutions will not be considered for acceptance when:

1. They are indicated or implied on shop drawings or product data submittals without a formal request from Bidder.

2. Acceptance will require substantial revision of Contract Documents.

3. In judgment of Architect, do not include adequate information necessary for a complete evaluation.

4. If requested after Contract Award directly by a subcontractor or supplier, except for special or unusual circumstances reviewed by the **Contractor** with Barton Malow Company.

E. Substitute products shall not be ordered or installed without written acceptance of Architect.

F. Architect will determine acceptability of proposed substitution.

2.02 BIDDER'S REPRESENTATION

A. In making formal request for substitution the Bidder represents that:

1. It has investigated the proposed product and has determined it is equivalent to or superior in all respects to the product specified.

2. It will provide same warranties or bonds for the proposed substitution as required for the product specified.

3. It will coordinate installation of the accepted substitution into the Work, and will make such changes as may be required for the Work to be complete in all respects.

4. It waives all claims for additional costs caused by or arising from the substitution which may subsequently become apparent.

5. Cost data is complete and includes related costs under its Agreement, but not:
   a. Costs under separate contracts.
   b. Architect's costs for redesign or revision of Contract Documents.

6. Cost data need not be submitted, if request is for inclusion in an addendum. Requests after the Agreement is awarded shall contain a complete cost comparison.

B. Any modifications necessary as a result of the use of an approved substitute shall be paid by the **Contractor** proposing the substitution.

C. Any additional engineering costs required to be performed by the Architect to approve, implement or coordinate the substitution above reasonable review services, shall be paid by the **Contractor** proposing the substitution.

D. Under no circumstances will the Architect be required to prove that a product proposed for substitution is or is not equal to the quality of the product specified.

2.03 ARCHITECT'S DUTIES

A. Review requests for substitutions with reasonable promptness.

B. Coordinate review/approval of "Architect Approved" substitutions with the Owner prior to notifying the Barton Malow Company.

C. Issue a written instruction of decision to accept the substitution.

D. Substitution requests that are not approved will be returned to the party submitting the request with an explanation for the rejection.

2.04 SUBSTITUTION REQUEST FORM

A. The form is attached to this Section.

B. SUBSTITUTIONS WILL BE CONSIDERED ONLY WHEN THE ATTACHED FORM IS COMPLETED AND INCLUDED WITH THE SUBMITTAL WITH ALL BACKUP DATA.

SUBSTITUTION REQUEST FORM

TO: **BARTON MALOW COMPANY/KINGSCOTT ASSOCIATES**
1301 Boyd
Troy, MI 48083
PH – 248-823-4631 FAX – 248-823-4672

We hereby submit for your consideration the following product instead of the specified item for the above Project:

DRAWING NO.: _____ **DRAWING NAME:** _____

SPEC. SECT.	SPEC. NAME	PARAGRAPH	SPECIFIED ITEM
_____	_____	_____	_____

Proposed Substitution:

Attached complete information on changes to Drawings and/or Specifications which proposed substitution will require for its proper installation.

Submit with request all necessary samples and substantiating data to prove equal quality and performance to that which is specified. Clearly mark manufacturer's literature to indicate equality in performance.

CERTIFICATION OF EQUAL PERFORMANCE AND ASSUMPTION OF LIABILITY FOR EQUAL PERFORMANCE

The undersigned states that the function, appearance and quality are equivalent or superior to the specified item.

Submitted by:

_____ _____

Signature Title

_____

Firm

_____

Address

_____ _____

Telephone Date

Signature shall be by person having authority to legally bind his/her firm to the above terms. Failure to provide legally binding signature will result in retraction of approval.

For use by Architect:	For Use by Owner:
____ Accepted ____ Accepted as Noted	____ Accepted ____ Accepted as Noted
____ Not Accepted ____ Received Too Late	____ Not Accepted ____ Received Too Late
____ Insufficient Data Received	____ Insufficient Data Received
By: _____	By: _____
Date: _____	Date: _____
Fill in Blanks Below: (Attach additional sheets as required)	

A. Does the Substitution affect dimensions shown on Drawings?
Yes _____ No _____ If yes, clearly indicate changes: _____

B. Will the undersigned pay for changes to the building design, including engineering and detailing costs caused by the requested substitution?
Yes _____ No _____ If no, fully explain: _____

C. What affect does substitution have on other contracts or other trades?

_____

D. What affect does substitution have on the delivery and construction schedule? _____

E. Manufacturer's warranties of the proposed and specified items are: _____ Same_____ Different
If Different, explain on an Attachment

F. Reason for Request: _____

G. Itemized comparison of specified item(s) with the proposed substitution; list significant variations:

H. Accurate cost data comparing proposed substitution with product specified:

I. This substitution will amount to a credit or an extra cost to the Owner of:
_____dollars
($_____)

END OF SECTION 01630

SECTION 01700
CONTRACT CLOSE-OUT

PART 1 - GENERAL

1.01 RELATED DOCUMENTS

A. Attention is directed to Bidding and Contract Requirements, and to Division 1, General Requirements, which are hereby made a part of this Section.

B. Comply with requirements stated in Sections 00500, 00700, 00800 and in Specifications for administrative procedures in closing out the Work. Where this Section conflicts with another Section or the technical Specifications, the provision granting greater rights or remedies to the Owner Barton Malow Company, or imposing the greater duty, standard, responsibility or obligation on Contractor shall govern.

1.02 DEFINITIONS

A. Close-out is the process of organizing the general project requirements near the end of contract time to evidence the completion of the Work. The time of close-out directly relates to "Substantial Completion." It can either be a single time period for the entire Work, or a series of time periods for individual parts of the Work, which have been certified as Substantially Complete at different dates. Unless otherwise defined in the Contract Documents

Substantial Completion of the Work is the stage in the progress of construction when the **Work** is sufficiently complete in accordance with the Contract Documents so that the Owner can occupy or utilize the Work for its intended use.

Substantial Completion of the Project is the stage when Project construction is sufficiently complete so the Owner can occupy or utilize the project for its intended use.

Final Completion of the Project is the stage when Certification of Substantial Completion has been issued by the Architect according to the terms and conditions of the Contract Documents and "approval of the Project Certificate for Payment has been received from the Architect (or Owner) and Barton Malow Company has received the proceeds of the Final Payment from the Owner in order to release final payment to the Contractor".

1.03 PROJECT COMPLETION

A. Contract requirements shall be met when construction activities have successfully produced, in this order, these three Project completion milestones:

1. Substantial Completion
2. Final Completion
3. Final Payment

PART 2 - CLOSE-OUT PROCESS

2.01 CONTRACT CLOSE OUT DOCUMENTATION

A. Before processing the completion of all contractual responsibilities of a **Contractor**, and to expedite final payment to a **Contractor**, a detailed review of all contractual requirements will be performed along with compiling a list of deficiencies. Refer to Sections 00500, 00700 and 00800 for detailed requirements. Effective and timely contract close-out is the objective, but it also requires efficient and timely action of the **Contractor** to provide the necessary punchlist completion Work, documents, materials, close-out documentation, and all other requirements set forth in the Contract Documents.

2.02 CLOSE-OUT PROCEDURE

A. The following procedure and forms will be used to progress through the contract close-out stage in a productive and timely manner.

Step 1 PREPARATION FOR CONTRACT CLOSE-OUT

During the course of the Project, the **Contractor** will thoroughly review the Contract Documents as it relates to the requirements and obligations and gather and submit to Barton Malow Company the proper submittals, shop drawings, material certifications, waivers, certificates of insurance, bonds, and other contractual requirements impacting contract close-out.

Step 2 INITIATING THE FINAL CLOSE-OUT PROCESS

When nearing 75% completion of the Work, the **Contractor** will review the status of the Close-Out process with Barton Malow Company. The **Contractor**'s contractual responsibilities will be reviewed and outstanding close-out and other submittals identified.

Step 3 OBTAINING THE CERTIFICATE OF SUBSTANTIAL COMPLETION

As the **Contractor** is nearing the completion of the Work and after concurrence with Barton Malow Company, it shall submit a written request for Substantial Completion, all required documentation as outlined, and a listing of all minor deficiencies yet to be completed.

The following documents are the minimum required at the time of request for Substantial Completion. **Contractor** shall also submit all additional documentation as required in the Contract Documents:

a. AIA G704 Certificate of Substantial Completion

b. As-built records (see Section 01720)

c. Operation and Maintenance Manuals (see Section 01730)
Typically, all O&M manuals will be submitted to the Owner six months prior to acceptance of equipment systems or building occupancy

c. Keys, Maintenance Stock, and Spare Parts - quantities as required in the specifications

d. Test and Start-up/Owner Operational Instruction Sessions (see Section 01750)

e. Submission of Permits and Approvals (i.e., Fire Marshal, Department of Public Health Approvals, etc.)

f. Guarantee and Warranties (see Section 01740)

h. Punchlist (list of work to be completed or corrected)

Once Barton Malow Company has received all required documents they will be forwarded to the Architect and Owner. Barton Malow Company will review the **Contractor**'s request for Substantial Completion; all above documentation, and list of deficiencies, add appropriate comments, and forward to the Architect and/or Owner for review. In conjunction with the **Contractor**, Barton Malow Company will establish a schedule for the completion of all listed items, which in no event shall exceed any time periods established in the Contract Documents for Final Completion.

When the Architect and/or Owner determine(s) that the Work is substantially complete, the Certificate of Substantial Completion shall be issued to the **Contractor**.

Step 4 CONTRACTOR COMPLETES PUNCHLIST WORK

Each **Contractor** shall submit a letter certifying all punchlist items are completed, in a manner acceptable to the Owner, Barton Malow Company and the Architect.

Step 5 FINAL INSPECTION NOTICE

Each **Contractor** is to forward **(written notice and accompanying documentation)** to Barton Malow Company that Work is ready for final inspection and acceptance. Barton Malow Company will forward written notice to the Architect if Barton Malow Company is in agreement that Work is complete. The Architect will perform a final inspection and sign off on the punchlist form if Work is in fact completed. If punchlist work is not found complete, the **Contractor** shall take action to remedy any insufficiencies and then shall re-submit the written notice and accompanying documentation that Work is ready for **final** inspection and acceptance. If Barton Malow Company and/or Architect are required to perform **"more than 2"** site visits to determine Substantial or Final Completion of **Contractor**'s Work, the costs for such additional inspections shall be charged to **Contractor**.

The following documents are the minimum required to complete final payment. **Contractor** shall also submit all additional documentation as required in the Contract Documents:

a. Final Payment Request (on G702 & G703)

b. Guarantees/Warranties (including subs and suppliers)

c. Final Sworn Statements (including subs and suppliers)

d. Acknowledgment of Payment and Partial Unconditional Release

e. Final Release Subcontractor/Materialman

f. Certified Payroll Report (projects governed by prevailing wage laws)

g. Verification of Rate Classification and Payment (Federal projects)

h. Consent of Surety Company to Final Payment (AIA G707)

i. Consent of Surety to Reduction or Partial Release of Retainage (AIA G707A)

j. Certificate of Substantial Completion (on G704)

k. Completion and acceptance of all punchlist Work

l. LEED Required documentation

Items b, c, d and e must always be submitted with the final request for payment.

Step 6 REVIEW OF FINAL PAYMENT REQUEST

Barton Malow Company and the Architect will review the **Contractor**'s final payment request and Close-Out file. **Barton Malow Company reserves the right to withhold 200% of the estimated cost for each punchlist item not completed until complete.** If all administrative documents are attached or have been submitted (i.e. guarantee, warranty, waiver of lien, etc.), all

Work is complete, and all other responsibilities are met, the Project Team will forward the Contractor's Application for Final Payment to the Owner and payment shall be processed according to the Owner's regular procedures.

2.03 FINAL COMPLETION

A. To attain final completion, the **Contractor** shall complete activities pertaining to Substantial Completion, and complete Work on punch list items. Only then shall it issue written request to Barton Malow Company to conduct a site visit to determine Final Completion.

B. When **Contractor** considers the Work is finally complete, it shall submit written certification that:

1. Contract Documents have been reviewed.

2. Work has been inspected for compliance with Contract Documents.

3. Work has been completed in accordance with Contract Documents.

4. Equipment and systems have been tested in the presence of the Owner's representative and are operational.

5. Work is completed and ready for final observation.

C. Barton Malow Company and/or Architect will make an observation to verify the status of completion with reasonable promptness after receipt of such certification.

D. Should Barton Malow Company and/or Architect consider that the Work is incomplete or defective:

1. Barton Malow Company will promptly notify the **Contractor** in writing, listing the incomplete or defective Work.

2. **Contractor** shall take immediate steps to remedy the stated deficiencies, and send a second written certification to the Barton Malow Company that the Work is complete.

3. Barton Malow Company and/or Architect will re-inspect the Work.

E. When Barton Malow Company and/or Architect determines that the Work is acceptable under the Contract Documents, it shall request the **Contractor** to make close-out submittals.

2.04 **CONTRACTOR**'S CLOSE-OUT SUBMITTALS

A. Evidence of compliance with requirements of governing authorities (state, local or federal):

1. Certificates of Inspection:
   a. Mechanical
   b. Electrical
   c. Others as required

B. Project Record Documents: Refer to requirements of Section 01720.

C. Operating and Maintenance Data, Instructions to Owner's Personnel: Refer to requirements of Section 01730.

D. Warranties and Bonds: Refer to requirements of Individual Sections and Individual Technical Specifications and Section 01740.

E. Spare Parts and Maintenance Materials: Refer to requirements of Individual Technical Specifications.

F. Evidence of Payment and Release of Liens: Refer to requirements of General and Supplementary Conditions and Section 01290.

G. LEED Required Documentation

END OF SECTION 01700

SECTION 01720
PROJECT RECORD DOCUMENTS

PART 1 - GENERAL

1.01 RELATED DOCUMENTS

A. Attention is directed to Bidding and Contract Requirements, and to Division 1, General Requirements, which are hereby made a part of this Section.

1.02 SUMMARY

A. Each **Contractor** shall be responsible to maintain at the job site one copy of:

1. Record Contract Drawings
2. Record Project Manual
3. Addenda
4. Reviewed/Approved Shop Drawings
5. Change Orders
6. Other modifications to Contract
7. Field test records
8. Affidavits

B. Store documents apart from documents used for construction.

C. Maintain documents in clean, dry, legible condition.

D. Do not use project record documents for construction purposes.

E. Make documents available for inspection by the Owner, Barton Malow Company and the Architect.

F. Failure to maintain documents up-to-date will be cause for withholding payments to **Contractor.**

G. At the outset of the project, obtain from the Architect through the Barton Malow Company, at no charge to the **Contractor**, one complete set of Contract Documents including:

1. Technical Specifications with all addenda.
2. One complete set of prints of all Drawings.

1.03 RECORDING

A. Label each document "Project Record".

B. Keep record documents current.

C. Do not permanently conceal any work until required information has been recorded.

D. Contract Drawings:

1. **Contractor** may at his option enter required information on a "working set" and then at completion of Project transfer the information to final submitted "Project Record" set.

2. **Contractor** shall legibly mark to record actual construction:

a. Depths of various elements of foundation in relation to survey data.

b. Horizontal and vertical location of underground utilities and appurtenances referenced to permanent surface improvements.

c. Location and depths of internal utilities and appurtenances concealed in construction referenced to visible and accessible features of structure.

d. Field changes of dimension and detail.

e. Changes made by PCO – Notice to Proceed

f. Details not on original Contract Drawings.

E. Technical Specifications and Addenda:

1. **Contractor** shall legibly mark up each section to record:

a. Manufacturer, trade name, catalog number and Supplier of each product and item of equipment actually installed.

b. Changes made by PCO - Notice to Proceed.

c. Other items not originally specified.

F. Conversion of Schematic Layouts:

1. Arrangement of conduits, circuits, piping, ducts and similar items are in most cases shown schematically on the Drawings.

2. **Contractor** shall legibly mark to record actual construction:

a. Dimensions accurate to within 1" of the center of items shown schematically.

b. Identify each item, for example, "cast iron drain", "galvanized water", etc.

c. Identify location of each item, for example, "under slab", "in ceiling plenum", "exposed", etc.

3. The Owner, Architect or Barton Malow Company may waive requirements of schematic layout conversion, when in their opinion, it serves no beneficial purpose. Do not, however, rely on waivers being issued except as specifically issued by the Barton Malow Company in written form.

1.04 SUBMITTAL

A. At completion of Project deliver, one (1) original and Two (2) copy sets of Record Documents, in a format acceptable to the Owner and the Architect, using the Final Document Submittal Form (in Section 01600 Forms), to Barton Malow Company prior to request for final payment.

B. Accompany submittal with transmittal letter, in duplicate, containing:

1. Date
2. Project title and number
3. Contractor's name and address
4. Title and number of each record document
5. Certification that each document as submitted is complete and accurate
6. Signature of Contractor, or his authorized representative

END OF SECTION 01720

SECTION 01730
OPERATIONS AND MAINTENANCE DATA

PART 1 - GENERAL

1.01 RELATED DOCUMENTS

A. Attention is directed to Bidding and Contract Requirements, and to Division 1, General Requirements, which are hereby made a part of this Section.

1.02 SCOPE

A. Compile product data and related information appropriate for Owner's maintenance and operation of products furnished under Contract.

1. Prepare operating and maintenance data as specified in this Section and as referenced in other pertinent sections of the Technical Specifications.

B. Instruct Owner's personnel in maintenance of products and in operation of equipment and systems in accordance with the requirements in Section 01750 Systems Demonstration, Operational Instruction and Start-up.

1.03 QUALITY ASSURANCE

A. Preparation of data shall be done by personnel:

1. Trained and experienced in maintenance and operation of described products.
2. Familiar with requirements of this Section.
3. Skilled as technical writer to the extent required to communicate essential data.
4. Skilled as draftsman competent to prepare required drawings.

1.04 FORM OF SUBMITTALS

A. Prepare data in the form of an instructional manual for use by Owner's personnel.

B. Format:

1. Size: 8-1/2" x 11"
2. Paper: white, for typed pages.
3. Text: Manufacturer's printed data, or neatly typewritten.
4. Drawings:
   a. Provide reinforced punched binder tab, bind in with text.
   b. Fold larger drawings to size of text pages.
5. Provide fly-leaf for each separate product, or each piece of operating equipment.
   a. Provide typed description of product, and major component parts of equipment.
   b. Provide indexed tabs.
6. Cover: Identify each volume with typed or printed title "OPERATING AND MAINTENANCE INSTRUCTIONS." list:
   a. Title of Project.
   b. Identity of separate structures as applicable.
   c. Identity of general subject matter covered in the manual.

C. Binders:

1. Commercial quality three-ring binders with durable and cleanable plastic covers.
2. Maximum ring size: 3"

3. When multiple binders are used, correlate the data into related consistent groupings.

1.05 CONTENT OF MANUAL

A. Neatly typewritten table of contents for each volume, arranged in systematic order.

1. Contractors, name of responsible principal, address and telephone number.
2. A list of each product required to be included, indexed to content of the volume.
3. List with each product, name, address and telephone number of:
   a. Subcontractor or installer.
   b. Maintenance contractor, as appropriate.
   c. Identify area of responsibility of each.
   d. Local source of supply for parts and replacement.
4. Identify each product by product name and other identifying symbols as set forth in Contract Documents.

B. Product Data:

1. Include only those sheets which are pertinent to the specific product.
2. Annotate each sheet to:
   a. Clearly identify specific product or part installed.
   b. Clearly identify data applicable to installation.
   c. Delete references to inapplicable information.

C. Drawings:

1. Supplement product data with drawings as necessary to clearly illustrate:
   a. Relations of component parts or equipment and systems.
   b. Control and flow diagrams.
2. Coordinate drawings with information in Project Record Documents to assure correct illustration of completed installation.
3. Contractor may use Project Record Documents as maintenance drawings - coordinate with Barton Malow Company.

D. Written text, as required to supplement product data for the particular installation:

1. Organize in consistent format under separate headings for different procedures.
2. Provide logical sequence of instructions for each procedure.

E. Copy of each warranty, bond and service contract issued.

1. Provide information sheet for Owner's personnel, give:
   a. Proper procedures in event of failure.
   b. Instances which might affect validity of warranties or bonds.

1.06 MANUAL REVIEW AND PREPARATION SCHEDULE

A. Submit two copies of preliminary draft of proposed formats and outlines of contents to Barton Malow Company prior to start of preparation.

1. Architect will review draft and return one copy with comments.

B. Submit two (2) copies of completed data in final form to the Barton Malow Company at least six (6) months before the end of the project, for Owner review.

1. Copy will be returned after final inspection or acceptance, with comments.

C. Submit copies of completed operation and maintenance manuals at least two (2) weeks before execution and have at hand for use in demonstrations and instructions.

D. Submit specified number of copies of approved data in final form to the Barton Malow Company ten (10) days after final inspection or acceptance.

PART 2 - PRODUCTS

2.01 MANUAL FOR MATERIALS AND FINISHES

A. Submit two (2) copies of complete manual in final form.

B. Content, for architectural products, applied materials and finishes:

1. Manufacturer's data, giving full information on products.
   a. Catalog number, size, and composition.
   b. Color and texture designations.
   c. Information required for reordering special-manufactured products.
2. Instructions for care, maintenance and preventative maintenance.
   a. Manufacturer's recommendation for types of cleaning agents and methods.
   b. Cautions against cleaning agents and methods which are detrimental to product.
   c. Recommended schedule for cleaning and maintenance.

C. Content, for moisture-protection and weather-exposed products:

1. Manufacturer's data, giving full information on products.
   a. Applicable standards.
   b. Chemical composition.
   c. Details of installation.
2. Instructions for inspection, maintenance and repair.

D. Additional requirements for maintenance data: Reference sections of Technical Specifications.

2.02 MANUAL FOR EQUIPMENT AND SYSTEMS

A. Submit two (2) copies of complete manual in final form.

B. Content, for each unit of equipment and system, as appropriate:

1. Description of unit and component parts.
   a. Function, normal operating characteristics, and limiting conditions.
   b. Performance curves, engineering data and tests.
   c. Complete nomenclature and commercial number of replaceable parts.
2. Operating procedures:
   a. Start-up, break-in, routine and normal operating instructions.
   b. Regulation, control, stopping, shutdown and emergency instructions.
   c. Summer and winter operating instructions.
   d. Special operating instructions.
3. Maintenance and Preventative Maintenance Procedures:
   a. Routine operations.
   b. Guide to "trouble-shooting".
   c. Disassembly, repair and re-assemble.
   d. Alignment, adjusting and checking.
4. Servicing and lubrication schedule.
   a. List of lubricants required.

5. Manufacturer's printed operating and maintenance instructions.
6. Description of sequence of operation by control manufacturer.
7. Original manufacturer's parts, list, illustrations, assembly drawings and diagrams required for maintenance.
   a. Predicted life of parts subject to wear.
   b. Items recommended to be stocked as spare parts.
8. As-installed control diagrams by controls manufacturer.
9. Each Contractor's coordination drawings.
   a. As-installed color coded piping diagrams.
10. Charts of valve tag numbers, with location and function of each valve.
11. List of original manufacturer's spare parts, manufacturer's current prices, and recommended quantities to be maintained in storage.
12. Other data as required under pertinent sections of specifications.

C. Content, for each electric and electronic system, as appropriate:

1. Description of system and component parts.
   a. Function, normal operating characteristics and limiting conditions.
   b. Performance curves, engineering data and tests.
   c. Complete nomenclature and commercial number of replaceable parts.
2. Circuit directories of panel boards.
   a. Electrical service.
   b. Controls.
   c. Communications.
3. As-installed color coded wiring diagrams.
4. Operating procedures:
   a. Routine and normal operating instructions.
   b. Sequences required.
   c. Special operating instructions.
5. Maintenance and preventative maintenance procedures:
   a. Routine operations.
   b. Guide to "trouble-shooting".
   c. Disassembly, repair and re-assemble.
   d. Adjustment and checking.
6. Manufacturer's printed operating and maintenance instructions.
7. List of original manufacturer's spare parts, manufacturer's current prices, and recommended quantities to be maintained in storage.
8. Other data as required under pertinent sections of specifications.

D. Prepare and include additional data when the need for such data becomes apparent during instruction of Owner's personnel.

E. Additional requirements for operating and maintenance data: Reference sections of Technical Specifications.

END OF SECTION 01730

SECTION 01740
WARRANTIES AND GUARANTEES

PART 1 - GENERAL

1.01 RELATED DOCUMENTS

A. Attention as directed to Bidding and Contract Requirements, and to Division 1, General requirements, which are hereby made part of this section.

1.02 SUMMARY

A. This section includes administrative and procedural requirements for warranties required by the Contract Documents, including manufacturers' standard warranties on products and special warranties:

1. Refer to General Conditions for terms of the Contractor's period and obligations for Correction of the Work.

B. Related Sections: The following sections also contain requirements that relate to this section:

1. Division 1 Section "Contract Close-out" specifies contract close-out procedures.

2. Divisions 2 through 16 Sections for specific requirements for warranties on products and installations specified to be warranted.

3. Certifications and other commitments and agreements for continuing services to Owner are specified elsewhere in the Contract Documents.

C. Disclaimers and Limitations: Manufacturer's disclaimers and limitations on product warranties do not relieve the Contractor of the warranty on the Work that incorporates the products. Manufacturer's disclaimers and limitations on product warranties do not relieve suppliers, manufacturers, and subcontractors required to countersign special warranties with the Contractor.

1.03 DEFINITIONS

A. **Standard Product Warranties** are preprinted written warranties published by individual manufacturers for particular products and are specifically endorsed by manufacturer to Owner.

B. **Special Warranties** are written warranties required by or incorporated in the Contract Documents, either to extend time limits provided by standard warranties or to provide greater rights for the Owner.

1.04 WARRANTY REQUIREMENTS

A. Deliver all written warranties and guarantees required by the Contract Documents with the Owner and Barton Malow Company named as beneficiaries. All warranties shall include labor and materials, shall be signed by the manufacturer or subcontractor as the case may be, and countersigned by the Contractor. All written warranties shall be addressed to the Owner and delivered to Barton Malow Company upon completion of the Project, before or with the submission of Request for Final Payment.

B. In addition to all other warranties set forth in the Contract Documents or imposed by applicable law, Contractor warrants to Owner and Barton Malow Company that the Work will be free from defects and performed in strict conformity with the requirements of the Contract Documents. This warranty survives the termination of the Agreement and shall only be extinguished by limitation periods imposed by applicable law and shall not be limited by any other provisions contained in the Agreement, including any provisions or time periods related to Contractor's obligation to correct defective Work.

C. Contractor, upon signing the Agreement, shall obtain and forward to Barton Malow Company any and all Standard Product Warranties for products, materials and systems covered under its Agreement. The Manufacturer's warranties do NOT relieve the Contractor from its warranty obligations under the Contract Documents.

D. Special Warranties shall become effective on a date established by the Project Team. This date generally shall be the date of Final Completion of the Project or Substantial Completion of the Project or portions thereof as agreed upon by the Project Team. In the case of acceptance of a portion of the Work or Project, separate warranties shall be issued for those specific portions of the Project that were accepted, and shall be dated the date the specific portion was accepted. As additional Work is accepted, separate warranties for those specific portions of the Work shall be issued and properly dated. Issuance of warranties for a portion of the Work shall in no way become the basis for Application for Final Payment.

E. If for any reason, the Bidder cannot warrant any part of the Work using products, materials, or construction methods that have been specified or shown, it shall notify Barton Malow Company in writing at least ten (10) days before the bid submission date, giving reasons together with the names of products and data on substitutions it can guarantee. Should the Bidder fail to so notify Barton Malow Company within this time period, it will be bound to all warranties and guarantees as set forth in the Contract Documents.

F. Related Damages and Losses: In correcting Work that has been rejected as defective or otherwise failing to conform to the Contract Documents, whether before or after Substantial Completion, Contractor shall bear all related costs, including, but not necessarily limited to, the cost to correct the Work, the cost to correct all other Work that has been damaged by the defective or non-conforming Work, or that is damaged in the process of correcting the defective or nonconforming Work, and the cost of all additional testing and inspections and compensation for the Architect and/or Barton Malow Company's services and expenses made necessary thereby.

G. Reinstatement of Warranty: When Work covered by a warranty with a specific time period has failed and has been corrected by Contractor, the warranty shall be reinstated for a time period equal to the original warranty.

H. Express warranties are in addition to implied warranties and shall not limit the duties, obligations, rights, and remedies otherwise available to the Owner or Barton Malow Company under the law. Express warranty periods shall not be interpreted as limitations on the time in which Owner or Barton Malow Company may enforce Contractor's duties and obligation or their rights and remedies under the Agreement and applicable law.

1. Rejection of Warranties: The Owner and Barton Malow Company reserve the right to reject warranties and to limit selection to products with warranties not in conflict with requirements of the Contract Documents.

I. Where the Contract Documents require a Special Warranty, or similar commitment on the Work or part of the Work, the Owner and Barton Malow Company reserve the right to refuse to accept the Work, until the Contractor presents evidence that the entities required to countersign such commitments are willing to do so.

1.05 SUBMITTALS

A. Submit one (1) original and one (1) copy of written warranties to the Barton Malow Company within fourteen (14) days of Substantial Completion using the form found in section 01600-Forms and organizing the warranty documents into an orderly sequence based on the table of contents of the Project Manual. If the project Team's Certificate of Substantial Completion designates a commencement date for warranties other than the date of Substantial Completion for the Work, or a designated portion of the Work, submit written warranties upon request of Barton Malow Company.

B. When the Contract Documents require Contractor, or Contractor and a Subordinate Party to execute a Special Warranty, prepare a written document that contains appropriate terms and identification, ready for execution by the required parties. Submit a draft to the Barton Malow Company for approval prior to final execution.

C. Forms for warranties are included in Section 01600-Forms. Prepare a written document utilizing the appropriate form, ready for execution by Contractor and its Subordinate Party(ies). Submit a draft to Barton Malow Company for approval prior to final execution.

1. Refer to Divisions 2 through 16 Sections for specific content requirements and particular requirements for submitting Special Warranties.

END OF SECTION 01740

SECTION 01750
SYSTEMS DEMONSTRATION, TRAINING AND START-UP

PART 1 - GENERAL

1.01 RELATED DOCUMENTS

A. Attention is directed to Bidding and Contract Requirements, and to Division 1, General Requirements, which are hereby made a part of this Section.

1.02 SCOPE

A. Procedures for demonstration of equipment operation and instruction of Owner's personnel. This will be coordinated through Barton Malow Company.

1.03 QUALITY ASSURANCE

A. When specified in individual Sections, require manufacturer to provide authorized representative to demonstrate operation of equipment and systems, instruct Owner's personnel, and provide written report that demonstrations and instructions have been completed.

B. Barton Malow Company will provide list of personnel to receive instructions, and will coordinate their attendance at agreed-upon times.

1.04 SUBMITTALS

A. Submit preliminary schedule to Barton Malow Company for Architect's and Owner's approval, listing times and dates for demonstration of each item of equipment and each system, at least two (2) weeks prior to proposed dates.

B. Submit one (1) report within one week after completion of demonstrations, that demonstrations and instructions have been satisfactorily completed. Give time and date of each demonstration, and hours devoted to demonstration, with a list of persons present.

PART 2 - EXECUTION

2.01 PREPARATION

A. Provide substantiating information that verifies equipment has been inspected and put into operation; testing, adjusting, and balancing has been performed; and equipment and systems are fully operational.

B. Submit copies of completed operation and maintenance manuals (see Section 01730) at least two (2) weeks before execution and have at hand for use in demonstrations and instructions.

C. Barton Malow Company will develop a schedule for the system demonstration, Operational Instruction, start-up and turn over of all systems and equipment.

2.02 DEMONSTRATION AND INSTRUCTIONS

A. Demonstrate operation and maintenance of equipment and systems to the Owner's, Barton Malow Company's and Architect's personnel two (2) weeks prior to date of final inspection. For equipment requiring seasonal operation, perform instructions for other seasons within six months. Contractor shall document the testing, equipment start-up and Operational Instruction sessions as required using the following forms in Section 01600 Forms:

1. Equipment/System Acceptance - This form will be completed for each piece of equipment or system for each contract that requires operational testing and/or Operational Instruction before acceptance. This will document the date of testing, the equipment tested, names of personnel which witnessed the testing and acceptance.

2. Owner Operational Instruction - This form will be completed for each contract that requires Operational Instruction to be provided to the Owner's personnel. This will document the date of Operational Instruction, type of Operational Instruction, names of the personnel trained and acceptance of the Operational Instruction.

B. The amount of time required for instruction on each item of equipment and system is that specified in individual sections or as mutually agreed upon between Contractor and Barton Malow Company.

C. Demonstrate start-up, operation, control, adjustment, troubleshooting, servicing, maintenance, and shutdown of each item of equipment at agreed-upon times, at designated location.

D. Use operation and maintenance manuals as basis of instruction and review the contents of the manuals with personnel in full detail to explain all aspects of operations and maintenance.

E. Prepare and insert additional data in operations and maintenance manuals when need for additional data becomes apparent during instructions.

END OF SECTION 01750

SPECIFICATIONS

FOR

TROY SCHOOL DISTRICT
BOULAN & LARSON M.S. REMODELING
SMITH M.S. ADDITION AND REMODELING

BID PACKAGE 9361

NOVEMBER 8, 2006

A/E #2643-12

OWNER
TROY SCHOOL DISTRICT
4400 LIVERNOIS ROAD
TROY, MICHIGAN 48098
(248) 823-4000

ARCHITECTS/ENGINEERS
KINGSCOTT ASSOCIATES, INC
229 EAST MICHIGAN AVENUE, SUITE 335
KALAMAZOO, MICHIGAN 49007
(269) 381-4880

STRUCTURAL ENGINEER
JDH ENGINEERING
3000 IVANREST, S.W., SUITE B
GRANDVILLE, MICHIGAN 49418
(616) 531-6020

LANDSCAPE ARCHITECTS
O'BOYLE, COWELL, BLALOCK
521 SOUTH RIVERVIEW DRIVE
KALAMAZOO, MICHIGAN 49004
(269) 381-3357

THE BAKER GROUP
2220 EAST PARIS AVE. SE
GRAND RAPIDS, MI 49546
(616) 942-4011

CONSTRUCTION MANAGER
BARTON MALOW COMPANY
26500 AMERICAN DRIVE
SOUTHFIELD, MICHIGAN 49034
(248) 436-5000

TABLE OF CONTENTS

DIVISION 1 - GENERAL REQUIREMENTS
01230 ALTERNATE
01731 CUTTING AND PATCHING
01732 SELECTIVE DEMOLITION

DIVISION 2 - SITE CONSTRUCTION
02230 SITE CLEARING
02300 EARTHWORK
GEOTECHNICAL SOILS REPORT
02630 STORM DRAINAGE
02741 HOT-MIX ASPHALT PAVING
02751 CEMENT CONCRETE PAVEMENT
02840 WALK, ROAD AND PARKING APPURTENANCES
02920 LAWNS AND GRASSES
02930 EXTERIOR PLANTS

DIVISION 3 - CONCRETE
03300 CAST-IN-PLACE CONCRETE
03542 HYDRAULIC-CEMENT-BASED UNDERLAYMENT

DIVISION 4 – MASONRY
04720 CAST STONE
04810 UNIT MASONRY ASSEMBLIES

DIVISION 5 - METALS
05120 STRUCTURAL STEEL
05210 STEEL JOISTS
05310 STEEL DECK
05400 COLD-FORMED METAL FRAMING

DIVISION 6 - WOOD AND PLASTICS
06105 MISCELLANEOUS CARPENTRY

DIVISION 7 - THERMAL AND MOISTURE PROTECTION
07210 BUILDING INSULATION
07412 METAL WALL PANELS
07552 MODIFIED BITUMINOUS MEMBRANE ROOFING
07710 MANUFACTURED ROOF SPECIALTIES
07720 ROOF ACCESSORIES
07841 THROUGH-PENETRATION FIRESTOP SYSTEMS

07842 FIRE-RESISTIVE JOINT SYSTEMS
07920 JOINT SEALANTS

DIVISION 8 - DOORS AND WINDOWS
08111 STANDARD STEEL DOORS AND FRAMES
08211 FLUSH WOOD DOORS
08311 ACCESS DOORS AND FRAMES
08411 ALUMINUM-FRAMED ENTRANCES AND STOREFRONTS
08520 ALUMINUM WINDOWS
08710 DOOR HARDWARE
08800 GLAZING

DIVISION 9 - FINISHES
09111 NON-LOAD-BEARING STEEL FRAMING
09250 GYPSUM BOARD
09310 CERAMIC TILE
09511 ACOUSTICAL PANEL CEILINGS
09651 RESILIENT FLOOR TILE
09653 RESILIENT WALL BASE AND ACCESSORIES
09681 CARPET TILE
09911 EXTERIOR PAINTING
09912 INTERIOR PAINTING

DIVISION 10 – SPECIALTIES
10101 VISUAL DISPLAY SURFACES
10155 TOILET COMPARTMENTS
10505 METAL LOCKERS
10520 FIRE-PROTECTION SPECIALTIES
10801 TOILET AND BATH ACCESSORIES

DIVISION 11 - EQUIPMENT
11132 PROJECTION SCREENS
11400 FOOD SERVICE EQUIPMENT
11490 GYMNASIUM EQUIPMENT

DIVISION 12 - FURNISHINGS
12355 INSTITUTIONAL CASEWORK
12660 TELESCOPING STANDS

DIVISION 13 - SPECIAL CONSTRUCTION
13845 LIGHTING CONTROLS
13851 FIRE ALARM

DIVISION 14 - CONVEYING SYSTEMS
NOT APPLICABLE

DIVISION 15 - MECHANICAL
15050 BASIC MECHANICAL MATERIALS AND METHODS
15055 MOTORS

15060 HANGERS AND SUPPORTS
15074 VIBRATION CONTROLS FOR HVAC PIPING AND EQUIPMENT
15075 MECHANICAL IDENTIFICATION
15080 MECHANICAL INSULATION
15110 VALVES
15127 METERS AND GAGES FOR HVAC PIPING
15140 DOMESTIC WATER PIPING
15145 DOMESTIC WATER PIPING SPECIALTIES
15150 SANITARY WASTE AND VENT PIPING
15155 SANITARY WASTE PIPING SPECIALTIES
15160 STORM DRAINAGE PIPING
15165 STORM DRAINAGE PIPING SPECIALTIES
15181 HYDRONIC PIPING
15183 REFRIGERANT PIPING
15185 HYDRONIC PUMPS
15189 HVAC WATER TREATMENT
15410 PLUMBING FIXTURES
15415 DRINKING FOUNTAINS AND WATER COOLERS
15513 CONDENSING BOILERS
15550 BREECHINGS, CHIMNEYS, AND STACKS
15671 CONDENSING UNITS
15725 MODULAR INDOOR AIR-HANDLING UNITS
15732 PACKAGED, OUTDOOR, CENTRAL-STATION AIR-HANDLING UNITS
15768 UNIT VENTILATORS
15785 AIR TO AIR ENERGY RECOVERY EQUIPMENT
15815 METAL DUCTS
15820 DUCT ACCESSORIES
15838 POWER VENTILATORS
15840 AIR TERMINAL UNITS
15855 DIFFUSERS, REGISTERS, AND GRILLES
15900 HVAC INSTRUMENTATION AND CONTROLS
15940 SEQUENCE OF OPERATION
15950 TESTING, ADJUSTING, AND BALANCING

DIVISION 16 - ELECTRICAL
16050 BASIC ELECTRICAL MATERIALS AND METHODS
16060 GROUNDING AND BONDING
16075 ELECTRICAL IDENTIFICATION
16080 ELECTRICAL TESTING
16120 CONDUCTORS AND CABLES
16130 RACEWAYS AND BOXES
16140 WIRING DEVICES
16145 LIGHTING CONTROL DEVICES
16289 TRANSIENT VOLTAGE SUPPRESSION
16410 ENCLOSED SWITCHES AND CIRCUIT BREAKERS
16420 ENCLOSED CONTROLLERS
16442 PANELBOARDS
16491 FUSES
16511 INTERIOR LIGHTING

SECTION 01230
ALTERNATES

PART 1 - GENERAL

1.1 RELATED DOCUMENTS

A. Drawings and general provisions of the Contract, including General and Supplementary Conditions and other Division 1 Specification Sections, apply to this Section.

1.2 SUMMARY

A. This Section includes administrative and procedural requirements for alternates.

1.3 DEFINITIONS

A. Alternate: An amount proposed by bidders and stated on the Bid Form for certain work defined in the Bidding Requirements that may be added to or deducted from the Base Bid amount if Owner decides to accept a corresponding change either in the amount of construction to be completed or in the products, materials, equipment, systems, or installation methods described in the Contract Documents.

1. The cost or credit for each alternate is the net addition to or deduction from the Contract Sum to incorporate alternate into the Work. No other adjustments are made to the Contract Sum.

1.4 PROCEDURES

A. Coordination: Modify or adjust affected adjacent work as necessary to completely integrate work of the alternate into Project.

1. Include as part of each alternate, miscellaneous devices, accessory objects, and similar items incidental to or required for a complete installation whether or not indicated as part of alternate.

B. Notification: Immediately following award of the Contract, notify each party involved, in writing, of the status of each alternate. Indicate if alternates have been accepted, rejected, or deferred for later consideration. Include a complete description of negotiated modifications to alternates.

C. Execute accepted alternates under the same conditions as other work of the Contract.

D. Schedule: A Schedule of Alternates is included at the end of this Section. Specification Sections referenced in schedule contain requirements for materials necessary to achieve the work described under each alternate.

PART 2 - PRODUCTS (Not Used)

PART 3 - EXECUTION

3.1 SCHEDULE OF ALTERNATES

A. Add Alternate No. B-E1: Boulan Middle School - Provide demolition of existing lighting and new lighting as shown on drawings in Pool #274.

B. Add Alternate No. B-E2: Boulan Middle School - Provide demolition of existing lighting and new lighting as shown on drawings in all locker room areas.

C. Add Alternate No. L-E1: Larson Middle School - Provide demolition of existing lighting and new lighting as shown on drawings in Pool #274.

D. Add Alternate No. L-E2: Larson Middle School - Provide demolition of existing lighting and new lighting as shown on drawings in all locker room areas.

E. Add Alternate No. S-1: Smith Middle School - Provide computer room furniture as shown on equipment plan.

F. Add Alternate No. S-E1: Smith Middle School-Provide Demolition of existing lighting and new lighting work as shown on drawings for Pool Area. Lighting Controls shall be in Base Bid.

G. Add Alternate No. S-E2: Provide demolition of existing lighting and provide new lighting as shown on drawing in the following areas: Gymnasium and pool locker areas.

H. Add Alternate No. S-E3: Provide demolition of existing lighting and provide new lighting as shown on drawing in the following area: The existing kitchen.

I. Add Alternate No. S-E4: Provide demolition of existing lighting and provide new lighting as shown on drawing in the following areas: Boys 123, Girls 124, Boys 217, Girls 219, Toilet 214, Girls 311, Boys 312, Girls 438, and Boys 439.

J. Add Alternate No. S-E5: Provide demolition of existing lighting and provide new lighting as shown on drawing in the following areas: Broadcast 226, Prep Rooms 240, 301 and 305, Office 241, 302, 306, 313, 314 and 325, Storage 309, 310, 318, 331, 409 and 410, Props 323A, Receiving 334, Mechanical 335.

END OF SECTION 01230

SECTION 01731
CUTTING AND PATCHING

PART 1 - GENERAL

1.1 RELATED DOCUMENTS

A. Drawings and general provisions of the Contract, including General and Supplementary Conditions and other Division 1 Specification Sections, apply to this Section.

1.2 SUMMARY

A. This Section includes procedural requirements for cutting and patching.

B. Related Sections include the following:

1. Division 1 Section "Selective Demolition" for demolition of selected portions of the building.
2. Divisions 2 through 16 Sections for specific requirements and limitations applicable to cutting and patching individual parts of the Work.
3. Division 7 Section "Through-Penetration Firestop Systems" for patching fire-rated construction.

1.3 DEFINITIONS

A. Cutting: Removal of in-place construction necessary to permit installation or performance of other Work.

B. Patching: Fitting and repair work required to restore surfaces to original conditions after installation of other Work.

1.4 QUALITY ASSURANCE

A. Structural Elements: Do not cut and patch structural elements in a manner that could change their load-carrying capacity or load-deflection ratio.

B. Operational Elements: Do not cut and patch operating elements and related components in a manner that results in reducing their capacity to perform as intended or that results in increased maintenance or decreased operational life or safety. Operating elements include the following:

1. Primary operational systems and equipment.
2. Air or smoke barriers.

3. Fire-suppression systems.
4. Mechanical systems piping and ducts.Control systems.
5. Communication systems.
6. Electrical wiring systems.
7. Operating systems of special construction in Division 13 Sections.

C. Miscellaneous Elements: Do not cut and patch miscellaneous elements or related components in a manner that could change their load-carrying capacity, that results in reducing their capacity to perform as intended, or that results in increased maintenance or decreased operational life or safety. Miscellaneous elements include the following:

1. Water, moisture, or vapor barriers.
2. Membranes and flashings.
3. Exterior curtain-wall construction.
4. Equipment supports.
5. Piping, ductwork, vessels, and equipment.
6. Noise- and vibration-control elements and systems.

D. Visual Requirements: Do not cut and patch construction in a manner that results in visual evidence of cutting and patching. Do not cut and patch construction exposed on the exterior or in occupied spaces in a manner that would, in Architect's opinion, reduce the building's aesthetic qualities. Remove and replace construction that has been cut and patched in a visually unsatisfactory manner.

1.5 WARRANTY

A. Existing Warranties: Remove, replace, patch, and repair materials and surfaces cut or damaged during cutting and patching operations, by methods and with materials so as not to void existing warranties.

PART 2 - PRODUCTS

2.1 MATERIALS

A. General: Comply with requirements specified in other Sections.

B. In-Place Materials: Use materials identical to in-place materials. For exposed surfaces, use materials that visually match in-place adjacent surfaces to the fullest extent possible.

1. If identical materials are unavailable or cannot be used, use materials that, when installed, will match the visual and functional performance of in-place materials.

PART 3 - EXECUTION

3.1 EXAMINATION

A. Examine surfaces to be cut and patched and conditions under which cutting and patching are to be performed.

1. Compatibility: Before patching, verify compatibility with and suitability of substrates, including compatibility with in-place finishes or primers.
2. Proceed with installation only after unsafe or unsatisfactory conditions have been corrected.

3.2 PREPARATION

A. Temporary Support: Provide temporary support of Work to be cut.

B. Protection: Protect in-place construction during cutting and patching to prevent damage. Provide protection from adverse weather conditions for portions of Project that might be exposed during cutting and patching operations.

C. Adjoining Areas: Avoid interference with use of adjoining areas or interruption of free passage to adjoining areas.

D. Existing Utility Services and Mechanical/Electrical Systems: Where existing services/systems are required to be removed, relocated, or abandoned, bypass such services/systems before cutting to minimize interruption to occupied areas.

3.3 PERFORMANCE

A. General: Employ skilled workers to perform cutting and patching. Proceed with cutting and patching at the earliest feasible time, and complete without delay.

1. Cut in-place construction to provide for installation of other components or performance of other construction, and subsequently patch as required to restore surfaces to their original condition.

B. Cutting: Cut in-place construction by sawing, drilling, breaking, chipping, grinding, and similar operations, including excavation, using methods least likely to damage elements retained or adjoining construction. If possible, review proposed procedures with original Installer; comply with original Installer's written recommendations.

1. In general, use hand or small power tools designed for sawing and grinding, not hammering and chopping. Cut holes and slots as small as possible, neatly to size required, and with minimum disturbance of adjacent surfaces. Temporarily cover openings when not in use.
2. Finished Surfaces: Cut or drill from the exposed or finished side into concealed surfaces.
3. Concrete and Masonry: Cut using a cutting machine, such as an abrasive saw or a diamond-core drill.

4. Excavating and Backfilling: Comply with requirements in applicable Division 2 Sections where required by cutting and patching operations.
5. Mechanical and Electrical Services: Cut off pipe or conduit in walls or partitions to be removed. Cap, valve, or plug and seal remaining portion of pipe or conduit to prevent entrance of moisture or other foreign matter after cutting.
6. Proceed with patching after construction operations requiring cutting are complete.

C. Patching: Patch construction by filling, repairing, refinishing, closing up, and similar operations following performance of other Work. Patch with durable seams that are as invisible as possible. Provide materials and comply with installation requirements specified in other Sections.

1. Inspection: Where feasible, test and inspect patched areas after completion to demonstrate integrity of installation.
2. Exposed Finishes: Restore exposed finishes of patched areas and extend finish restoration into retained adjoining construction in a manner that will eliminate evidence of patching and refinishing.

    a. Clean piping, conduit, and similar features before applying paint or other finishing materials.
    b. Restore damaged pipe covering to its original condition.

3. Floors and Walls: Where walls or partitions that are removed extend one finished area into another, patch and repair floor and wall surfaces in the new space. Provide an even surface of uniform finish, color, texture, and appearance. Remove in-place floor and wall coverings and replace with new materials, if necessary, to achieve uniform color and appearance.

    a. Where patching occurs in a painted surface, apply primer and intermediate paint coats over the patch and apply final paint coat over entire unbroken surface containing the patch. Provide additional coats until patch blends with adjacent surfaces.

4. Ceilings: Patch, repair, or rehang in-place ceilings as necessary to provide an even-plane surface of uniform appearance.
5. Exterior Building Enclosure: Patch components in a manner that restores enclosure to a weathertight condition.

D. Cleaning: Clean areas and spaces where cutting and patching are performed. Completely remove paint, mortar, oils, putty, and similar materials.

END OF SECTION 01731

SECTION 01732
SELECTIVE DEMOLITION

PART 1 - GENERAL

1.1 RELATED DOCUMENTS

A. Drawings and general provisions of the Contract, including General and Supplementary Conditions and other Division 1 Specification Sections, apply to this Section.

1.2 SUMMARY

A. This Section includes the following:

1. Demolition and removal of selected portions of building or structure.
2. Demolition and removal of selected site elements.
3. Salvage of existing items to be reused or recycled.

B. Related Sections include the following:

1. Division 1 Section "Temporary Facilities and Controls" for temporary construction and environmental-protection measures for selective demolition operations.
2. Division 1 Section "Construction Waste Management" for disposal of demolished materials.
3. Division 1 Section "Cutting and Patching" for cutting and patching procedures.
4. Division 2 Section "Site Clearing" for site clearing and removal of above- and below-grade improvements.

1.3 DEFINITIONS

A. Remove: Detach items from existing construction and legally dispose of them off-site, unless indicated to be removed and salvaged or removed and reinstalled.

B. Remove and Salvage: Detach items from existing construction and deliver them to Owner.

C. Remove and Reinstall: Detach items from existing construction, prepare them for reuse, and reinstall them where indicated.

D. Existing to Remain: Existing items of construction that are not to be removed and that are not otherwise indicated to be removed, removed and salvaged, or removed and reinstalled.

1.4 SUBMITTALS

A. Inventory: After selective demolition is complete, submit a list of items that have been removed and salvaged.

B. Predemolition Photographs or Videotapes: Show existing conditions of adjoining construction and site improvements, including finish surfaces, that might be misconstrued as damage caused by selective demolition operations. Comply with Division 1 Section "Photographic Documentation." Submit before Work begins.

C. Landfill Records: Indicate receipt and acceptance of hazardous wastes by a landfill facility licensed to accept hazardous wastes.

1. Comply with submittal requirements in Division 1 Section "Construction Waste Management."

1.5 QUALITY ASSURANCE

A. Demolition Firm Qualifications: An experienced firm that has specialized in demolition work similar in material and extent to that indicated for this Project.

B. Refrigerant Recovery Technician Qualifications: Certified by an EPA-approved certification program.

C. Regulatory Requirements: Comply with governing EPA notification regulations before beginning selective demolition. Comply with hauling and disposal regulations of authorities having jurisdiction.

D. Standards: Comply with ANSI A10.6 and NFPA 241.

E. Predemolition Conference: Conduct conference at Project site to comply with requirements in Division 1 Section "Project Management and Coordination."

1.6 PROJECT CONDITIONS

A. Owner will occupy portions of building immediately adjacent to selective demolition area. Conduct selective demolition so Owner's operations will not be disrupted.

B. Conditions existing at time of inspection for bidding purpose will be maintained by Owner as far as practical.

C. Notify Architect of discrepancies between existing conditions and Drawings before proceeding with selective demolition.

D. Hazardous Materials: It is not expected that hazardous materials will be encountered in the Work.

1. Hazardous materials will be removed by Owner before start of the Work.

2. If materials suspected of containing hazardous materials are encountered, do not disturb; immediately notify Architect and Owner. Owner will remove hazardous materials under a separate contract.

E. Storage or sale of removed items or materials on-site is not permitted.

F. Utility Service: Maintain existing utilities indicated to remain in service and protect them against damage during selective demolition operations.

1. Maintain fire-protection facilities in service during selective demolition operations.

1.7 WARRANTY

A. Existing Warranties: Remove, replace, patch, and repair materials and surfaces cut or damaged during selective demolition, by methods and with materials so as not to void existing warranties.

PART 2 - PRODUCTS (Not Used)

PART 3 - EXECUTION

3.1 EXAMINATION

A. Verify that utilities have been disconnected and capped.

B. Survey existing conditions and correlate with requirements indicated to determine extent of selective demolition required.

C. Inventory and record the condition of items to be removed and reinstalled and items to be removed and salvaged.

D. When unanticipated mechanical, electrical, or structural elements that conflict with intended function or design are encountered, investigate and measure the nature and extent of conflict. Promptly submit a written report to Architect.

E. Engage a professional engineer to survey condition of building to determine whether removing any element might result in structural deficiency or unplanned collapse of any portion of structure or adjacent structures during selective demolition operations.

F. Survey of Existing Conditions: Record existing conditions by use of preconstruction photographs or preconstruction videotapes.

G. Perform surveys as the Work progresses to detect hazards resulting from selective demolition activities.

3.2 UTILITY SERVICES AND MECHANICAL/ELECTRICAL SYSTEMS

A. Existing Services/Systems: Maintain services/systems indicated to remain and protect them against damage during selective demolition operations.

B. Service/System Requirements: Locate, identify, disconnect, and seal or cap off indicated utility services and mechanical/electrical systems serving areas to be selectively demolished.

1. Owner will arrange to shut off indicated services/systems when requested by Contractor.
2. Arrange to shut off indicated utilities with utility companies.
3. If services/systems are required to be removed, relocated, or abandoned, before proceeding with selective demolition provide temporary services/systems that bypass area of selective demolition and that maintain continuity of services/systems to other parts of building.
4. Cut off pipe or conduit in walls or partitions to be removed. Cap, valve, or plug and seal remaining portion of pipe or conduit after bypassing.

    a. Where entire wall is to be removed, existing services/systems may be removed with removal of the wall.

3.3 PREPARATION

A. Site Access and Temporary Controls: Conduct selective demolition and debris-removal operations to ensure minimum interference with roads, streets, walks, walkways, and other adjacent occupied and used facilities.

1. Comply with requirements for access and protection specified in Division 1 Section "Temporary Facilities and Controls."

B. Temporary Facilities: Provide temporary barricades and other protection required to prevent injury to people and damage to adjacent buildings and facilities to remain.

1. Provide protection to ensure safe passage of people around selective demolition area and to and from occupied portions of building.
2. Provide temporary weather protection, during interval between selective demolition of existing construction on exterior surfaces and new construction, to prevent water leakage and damage to structure and interior areas.
3. Protect walls, ceilings, floors, and other existing finish work that are to remain or that are exposed during selective demolition operations.
4. Cover and protect furniture, furnishings, and equipment that have not been removed.
5. Comply with requirements for temporary enclosures, dust control, heating, and cooling specified in Division 1 Section "Temporary Facilities and Controls."

C. Temporary Shoring: Provide and maintain shoring, bracing, and structural supports as required to preserve stability and prevent movement, settlement, or collapse of construction and finishes to remain, and to prevent unexpected or uncontrolled movement or collapse of construction being demolished.

1. Strengthen or add new supports when required during progress of selective demolition.

3.4 SELECTIVE DEMOLITION, GENERAL

A. General: Demolish and remove existing construction only to the extent required by new construction and as indicated. Use methods required to complete the Work within limitations of governing regulations and as follows:

1. Proceed with selective demolition systematically, from higher to lower level. Complete selective demolition operations above each floor or tier before disturbing supporting members on the next lower level.
2. Neatly cut openings and holes plumb, square, and true to dimensions required. Use cutting methods least likely to damage construction to remain or adjoining construction. Use hand tools or small power tools designed for sawing or grinding, not hammering and chopping, to minimize disturbance of adjacent surfaces. Temporarily cover openings to remain.
3. Cut or drill from the exposed or finished side into concealed surfaces to avoid marring existing finished surfaces.
4. Do not use cutting torches until work area is cleared of flammable materials. At concealed spaces, such as duct and pipe interiors, verify condition and contents of hidden space before starting flame-cutting operations. Maintain fire watch and portable fire-suppression devices during flame-cutting operations.
5. Maintain adequate ventilation when using cutting torches.
6. Remove decayed, vermin-infested, or otherwise dangerous or unsuitable materials and promptly dispose of off-site.
7. Remove structural framing members and lower to ground by method suitable to avoid free fall and to prevent ground impact or dust generation.
8. Locate selective demolition equipment and remove debris and materials so as not to impose excessive loads on supporting walls, floors, or framing.
9. Dispose of demolished items and materials promptly.

B. Removed and Salvaged Items:

1. Clean salvaged items.
2. Pack or crate items after cleaning. Identify contents of containers.
3. Store items in a secure area until delivery to Owner.
4. Transport items to Owner's storage area designated by Owner.
5. Protect items from damage during transport and storage.

C. Removed and Reinstalled Items:

1. Clean and repair items to functional condition adequate for intended reuse. Paint equipment to match new equipment.
2. Pack or crate items after cleaning and repairing. Identify contents of containers.
3. Protect items from damage during transport and storage.
4. Reinstall items in locations indicated. Comply with installation requirements for new materials and equipment. Provide connections, supports, and miscellaneous materials necessary to make item functional for use indicated.

D. Existing Items to Remain: Protect construction indicated to remain against damage and soiling during selective demolition. When permitted by Architect, items may be removed to a suitable, protected storage location during selective demolition and cleaned and reinstalled in their original locations after selective demolition operations are complete.

3.5 SELECTIVE DEMOLITION PROCEDURES FOR SPECIFIC MATERIALS

A. Concrete: Demolish in small sections. Cut concrete to a depth of at least 3/4 inch at junctures with construction to remain, using power-driven saw. Dislodge concrete from reinforcement at perimeter of areas being demolished, cut reinforcement, and then remove remainder of concrete indicated for selective demolition. Neatly trim openings to dimensions indicated.

B. Masonry: Demolish in small sections. Cut masonry at junctures with construction to remain, using power-driven saw, then remove masonry between saw cuts.

C. Concrete Slabs-on-Grade: Saw-cut perimeter of area to be demolished, then break up and remove.

D. Resilient Floor Coverings: Remove floor coverings and adhesive according to recommendations in RFCI-WP and its Addendum.

1. Remove residual adhesive and prepare substrate for new floor coverings by one of the methods recommended by RFCI.

E. Air-Conditioning Equipment: Remove equipment without releasing refrigerants.

3.6 DISPOSAL OF DEMOLISHED MATERIALS

A. General: Except for items or materials indicated to be recycled, reused, salvaged, reinstalled, or otherwise indicated to remain Owner's property, remove demolished materials from Project site and legally dispose of them in an EPA-approved landfill.

1. Do not allow demolished materials to accumulate on-site.
2. Remove and transport debris in a manner that will prevent spillage on adjacent surfaces and areas.
3. Remove debris from elevated portions of building by chute, hoist, or other device that will convey debris to grade level in a controlled descent.

B. Burning: Do not burn demolished materials.

C. Disposal: Transport demolished materials off Owner's property and legally dispose of them.

3.7 CLEANING

A. Clean adjacent structures and improvements of dust, dirt, and debris caused by selective demolition operations. Return adjacent areas to condition existing before selective demolition operations began.

3.8 SELECTIVE DEMOLITION SCHEDULE

A. Existing Items to Be Removed and Reinstalled: Kiln hood and pully system at Smith.

B. Existing Items to Be Removed, Salvaged, and turned over to the owner: Door hardware, security cameras and security motion detectors.

END OF SECTION 01732

SECTION 02230
SITE CLEARING

PART 1 - GENERAL

1.1 RELATED DOCUMENTS

A. Drawings and general provisions of the Contract, including General and Supplementary Conditions and Division 01 Specification Sections, apply to this Section.

1.2 SUMMARY

A. This Section includes the following:

1. Protecting existing trees, shrubs, groundcovers, plants, and grass to remain.
2. Removing existing trees, shrubs, groundcovers, plants, and grass.
3. Clearing and grubbing.
4. Stripping and stockpiling topsoil.
5. Removing above- and below-grade site improvements.
6. Temporary erosion and sedimentation control measures.

B. Related Sections include the following:
1. Division 01 Section "Execution" for verifying utility locations and for recording field measurements.
2. Division 02 Section "Selective Structure Demolition" for partial demolition of buildings or structures undergoing alterations.
3. Division 31 Section "Earth Moving" for soil materials, excavating, backfilling, and site grading.
4. Division 23 Section "Turf and Grasses and Plants" for finish grading including preparing and placing planting soil mixes and testing of topsoil material.

1.3 DEFINITIONS

A. Topsoil: Natural or cultivated surface-soil layer containing organic matter and sand, silt, and clay particles; friable, pervious, and black or a darker shade of brown, gray, or red than underlying subsoil; reasonably free of subsoil, clay lumps, gravel, and other objects more than 2 inches (50 mm) in diameter; and free of subsoil and weeds, roots, toxic materials, or other nonsoil materials.

B. Tree Protection Zone: Area surrounding individual trees or groups of trees to be protected during construction, and defined by the drip line of individual trees or the perimeter drip line of groups of trees, unless otherwise indicated.

1.4 MATERIAL OWNERSHIP

A. Except for stripped topsoil or other materials indicated to remain Owner's property, cleared materials shall become Contractor's property and shall be removed from Project site.

1.5 PROJECT CONDITIONS

A. Traffic: Minimize interference with adjoining roads, streets, walks, and other adjacent occupied or used facilities during site-clearing operations.

1. Do not close or obstruct streets, walks, or other adjacent occupied or used facilities without permission from Owner and authorities having jurisdiction.
2. Provide alternate routes around closed or obstructed traffic ways if required by authorities having jurisdiction.

B. Salvable Improvements: Carefully remove items indicated to be salvaged and store on Owner's premises where indicated.

C. Utility Locator Service: Notify utility locator service for area where Project is located before site clearing.

D. Do not commence site clearing operations until temporary erosion and sedimentation control measures are in place.

PART 2 - PRODUCTS (Not Applicable)

PART 3 - EXECUTION

3.1 PREPARATION

A. Protect and maintain benchmarks and survey control points from disturbance during construction.

B. Locate and clearly flag trees and vegetation to remain or to be relocated.

C. Protect existing site improvements to remain from damage during construction.

1. Restore damaged improvements to their original condition, as acceptable to Owner.

3.2 TEMPORARY EROSION AND SEDIMENTATION CONTROL

A. Provide temporary erosion and sedimentation control measures to prevent soil erosion and discharge of soil-bearing water runoff or airborne dust to adjacent properties and walkways, according to a sediment and erosion control plan, specific to the site, that complies with requirements of authorities having jurisdiction.

B. Inspect, repair, and maintain erosion and sedimentation control measures during construction until permanent vegetation has been established.

C. Remove erosion and sedimentation controls and restore and stabilize areas disturbed during removal.

3.3 TREE PROTECTION

A. Erect and maintain temporary fencing around tree protection zones before starting site clearing. Remove fence when construction is complete.

1. Do not store construction materials, debris, or excavated material within fenced area.
2. Do not permit vehicles, equipment, or foot traffic within fenced area.
3. Maintain fenced area free of weeds and trash.

B. Do not excavate within tree protection zones, unless otherwise indicated.

C. Where excavation for new construction is required within tree protection zones, hand clear and excavate to minimize damage to root systems. Use narrow-tine spading forks, comb soil to expose roots, and cleanly cut roots as close to excavation as possible.

1. Cover exposed roots with burlap and water regularly.
2. Temporarily support and protect roots from damage until they are permanently redirected and covered with soil.
3. Coat cut faces of roots more than 1-1/2 inches (38 mm) in diameter with an emulsified asphalt or other approved coating formulated for use on damaged plant tissues.
4. Backfill with soil as soon as possible.

D. Repair or replace trees and vegetation indicated to remain that are damaged by construction operations, in a manner approved by Architect.

1. Employ an arborist, licensed in jurisdiction where Project is located, to submit details of proposed repairs and to repair damage to trees and shrubs.
2. Replace trees that cannot be repaired and restored to full-growth status, as determined by Architect.

3.4 UTILITIES

A. Locate, identify, disconnect, and seal or cap off utilities indicated to be removed.

1. Arrange with utility companies to shut off indicated utilities.
2. Owner will arrange to shut off indicated utilities when requested by Contractor.

B. Existing Utilities: Do not interrupt utilities serving facilities occupied by Owner or others unless permitted under the following conditions and then only after arranging to provide temporary utility services according to requirements indicated:

1. Notify Architect not less than two days in advance of proposed utility interruptions.
2. Do not proceed with utility interruptions without Architect's written permission.

C. Excavate for and remove underground utilities indicated to be removed.

3.5 CLEARING AND GRUBBING

A. Remove obstructions, trees, shrubs, grass, and other vegetation to permit installation of new construction.

1. Do not remove trees, shrubs, and other vegetation indicated to remain or to be relocated.
2. Cut minor roots and branches of trees indicated to remain in a clean and careful manner where such roots and branches obstruct installation of new construction.
3. Grind stumps and remove roots, obstructions, and debris extending to a depth of 18 inches (450 mm) below exposed subgrade.
4. Use only hand methods for grubbing within tree protection zone.

B. Fill depressions caused by clearing and grubbing operations with satisfactory soil material unless further excavation or earthwork is indicated.

1. Place fill material in horizontal layers not exceeding a loose depth of 8 inches (200 mm), and compact each layer to a density equal to adjacent original ground.

3.6 TOPSOIL STRIPPING

A. Remove sod and grass before stripping topsoil.

B. Strip topsoil to whatever depths are encountered in a manner to prevent intermingling with underlying subsoil or other waste materials.

1. Remove subsoil and nonsoil materials from topsoil, including trash, debris, weeds, roots, and other waste materials.

C. Stockpile topsoil materials away from edge of excavations without intermixing with subsoil. Grade and shape stockpiles to drain surface water. Cover to prevent windblown dust.

1. Limit height of topsoil stockpiles to 72 inches (1800 mm).
2. Do not stockpile topsoil within tree protection zones.
3. Dispose of excess topsoil as specified for waste material disposal.
4. Stockpile surplus topsoil to allow for respreading deeper topsoil.

3.7 SITE IMPROVEMENTS

A. Remove existing above- and below-grade improvements as indicated and as necessary to facilitate new construction.

B. Remove slabs, paving, curbs, gutters, and aggregate base as indicated.

1. Unless existing full-depth joints coincide with line of demolition, neatly saw-cut length of existing pavement to remain before removing existing pavement. Saw-cut faces vertically.
2. Paint cut ends of steel reinforcement in concrete to remain to prevent corrosion.

3.8 DISPOSAL

A. Disposal: Remove surplus soil material, unsuitable topsoil, obstructions, demolished materials, and waste materials including trash and debris, and legally dispose of them off Owner's property.

END OF SECTION

SECTION 02300
EARTHWORK

PART 1 - GENERAL

1.1 RELATED DOCUMENTS

A. Drawings and general provisions of the Contract, including General and Supplementary Conditions and Division 01 Specification Sections, apply to this Section.

1.2 GENERAL

A. The final Geotechnical Exploration and Engineering Report prepared by Professional Service Industries, Inc. is an integral part of the Construction Documents. Refer to these documents for recommendations which shall be followed in the construction of the Project.

1.3 SUMMARY

A. This Section includes the following:

1. Preparing subgrades for slabs-on-grade, walks, pavements, lawns and grasses, and exterior plants.
2. Excavating and backfilling for buildings and structures.
3. Drainage course for slabs-on-grade.
4. Subbase course for concrete walks and pavements.
5. Base course for asphalt paving.
6. Excavating and backfilling for utility trenches.

B. Related Sections include the following:

1. Division 01 Section "Temporary Facilities and Controls" for temporary controls, utilities, and support facilities.
2. Division 03 Section "Cast-in-Place Concrete" for granular course if placed over vapor retarder and beneath the slab-on-grade.
3. Divisions 21, 22, 23, 26, 27, and 28 Sections for installing underground mechanical and electrical utilities and buried mechanical and electrical structures.
4. Division 31 Section "Site Clearing" for temporary erosion and sedimentation control measures, site stripping, grubbing, stripping and stockpiling topsoil, and removal of above- and below-grade improvements and utilities.
5. Division 32 Section "Turf and Grasses" for finish grading, including preparing and placing topsoil and planting soil for lawns.

6. Division 32 Section "Plants" for planting bed establishment and tree and shrub pit excavation and planting.

1.4 DEFINITIONS

A. Backfill: Soil material or controlled low-strength material used to fill an excavation.

1. Initial Backfill: Backfill placed beside and over pipe in a trench, including haunches to support sides of pipe.
2. Final Backfill: Backfill placed over initial backfill to fill a trench.

B. Base Course: Course placed between the subbase course and hot-mix asphalt paving.

C. Bedding Course: Course placed over the excavated subgrade in a trench before laying pipe.

D. Borrow Soil: Satisfactory soil imported from off-site for use as fill or backfill.

E. Drainage Course: Course supporting the slab-on-grade that also minimizes upward capillary flow of pore water.

F. Excavation: Removal of material encountered above subgrade elevations and to lines and dimensions indicated.

1. Authorized Additional Excavation: Excavation below subgrade elevations or beyond indicated lines and dimensions as directed by Architect. Authorized additional excavation and replacement material will be paid for according to Contract provisions for changes in the Work.
2. Unauthorized Excavation: Excavation below subgrade elevations or beyond indicated lines and dimensions without direction by Architect. Unauthorized excavation, as well as remedial work directed by Architect, shall be without additional compensation.

G. Fill: Soil materials used to raise existing grades.

H. Structures: Buildings, footings, foundations, retaining walls, slabs, tanks, curbs, mechanical and electrical appurtenances, or other man-made stationary features constructed above or below the ground surface.

I. Subbase Course: Course placed between the subgrade and base course for hot-mix asphalt pavement, or course placed between the subgrade and a cement concrete pavement or a cement concrete or hot-mix asphalt walk.

J. Subgrade: Surface or elevation remaining after completing excavation, or top surface of a fill or backfill immediately below subbase, drainage fill, or topsoil materials.

K. Utilities: On-site underground pipes, conduits, ducts, and cables, as well as underground services within buildings.

1.5 SUBMITTALS

A. Material Test Reports: From a qualified testing agency indicating and interpreting test results for compliance of the following with requirements indicated:

1. Classification according to ASTM D 2487 of each on-site and borrow soil material proposed for fill and backfill.
2. Laboratory compaction curve according to ASTM D 1557 for each on-site and borrow soil material proposed for fill and backfill.

1.6 QUALITY ASSURANCE

A. Erosion Control: Erosion shall be controlled as described on Drawings and required by Oakland County, the State of Michigan or other authorities having jurisdiction. Erosion control devices referenced on the plans are based on the "Soil Erosion and Sedimentation Control Guidebook" as published by the State of Michigan, Department of Management and Budget, February 2005.

1.7 PROJECT CONDITIONS

A. Existing Utilities: Do not interrupt utilities serving facilities occupied by Owner or others unless permitted in writing by Architect and then only after arranging to provide temporary utility services according to requirements indicated.

1. Notify Architect not less than two days in advance of proposed utility interruptions.
2. Do not proceed with utility interruptions without Architect's written permission.
3. Contact utility-locator service for area where Project is located before excavating.

B. Demolish and completely remove from site existing underground utilities indicated to be removed. Coordinate with utility companies to shut off services if lines are active.

PART 2 - PRODUCTS

2.1 SOIL MATERIALS

A. General: Provide borrow soil materials when sufficient satisfactory soil materials are not available from excavations.

B. Satisfactory Soils: ASTM D 2487 Soil Classification Groups GW, GP, GM, SW, SP, and SM, or a combination of these groups; free of rock or gravel larger than 3 inches (75 mm) in any dimension, debris, waste, frozen materials, vegetation, and other deleterious matter.

C. Unsatisfactory Soils: Soil Classification Groups GC, SC, CL, ML, OL, CH, MH, OH, and PT according to ASTM D 2487, or a combination of these groups.

1. Unsatisfactory soils also include satisfactory soils not maintained within 2 percent of optimum moisture content at time of compaction.

D. Backfill and Fill: Satisfactory soil material.

E. Subbase Material: MDOT Class II sand.

F. Aggregate Base Below Asphalt Pavement: MDOT 21 AA Limestone.

G. Engineered Fill: MDOT Class II sand.

H. Bedding Course: Naturally or artificially graded mixture of natural or crushed gravel, crushed stone, and natural or crushed sand; ASTM D 2940; except with 100 percent passing a 1-inch (25-mm) sieve and not more than 8 percent passing a No. 200 (0.075-mm) sieve.

I. Drainage Aggregate: Peastone, MDOT 34R.

J. Drainage Course: MDOT Class II Sand.

2.2 ACCESSORIES

A. Detectable Warning Tape: Acid- and alkali-resistant polyethylene film warning tape manufactured for marking and identifying underground utilities, a minimum of 6 inches (150 mm) wide and 4 mils (0.1 mm) thick, continuously inscribed with a description of the utility, with metallic core encased in a protective jacket for corrosion protection, detectable by metal detector when tape is buried up to 30 inches (750 mm) deep; colored as follows:

1. Red: Electric.
2. Yellow: Gas, oil, steam, and dangerous materials.
3. Orange: Telephone and other communications.
4. Blue: Water systems.
5. Green: Sewer systems.

PART 3 - EXECUTION

3.1 PREPARATION

A. Protect structures, utilities, sidewalks, pavements, and other facilities from damage caused by settlement, lateral movement, undermining, washout, and other hazards created by earthwork operations.

B. Preparation of subgrade for earthwork operations including removal of vegetation, topsoil, debris, obstructions, and deleterious materials from ground surface is specified in Division 31 Section "Site Clearing."

C. Protect and maintain erosion and sedimentation controls, which are specified in Division 31 Section "Site Clearing," during earthwork operations.

D. Provide protective insulating materials to protect subgrades and foundation soils against freezing temperatures or frost.

3.2 DEWATERING

A. Prevent surface water and ground water from entering excavations, from ponding on prepared subgrades, and from flooding Project site and surrounding area.

B. Protect subgrades from softening, undermining, washout, and damage by rain or water accumulation.

1. Reroute surface water runoff away from excavated areas. Do not allow water to accumulate in excavations. Do not use excavated trenches as temporary drainage ditches.
2. Install a dewatering system to keep subgrades dry and convey ground water away from excavations. Maintain until dewatering is no longer required.

3.3 EXPLOSIVES

A. Explosives: Do not use explosives.

3.4 EXCAVATION, GENERAL

A. Unclassified Excavation: Excavate to subgrade elevations regardless of the character of surface and subsurface conditions encountered. Unclassified excavated materials may include rock, soil materials, and obstructions. No changes in the Contract Sum or the Contract Time will be authorized for rock excavation or removal of obstructions.

3.5 EXCAVATION FOR STRUCTURES

A. Excavate to indicated elevations and dimensions within a tolerance of plus or minus 1 inch (25 mm). If applicable, extend excavations a sufficient distance from structures for placing and removing concrete formwork, for installing services and other construction, and for inspections.

1. Excavations for Footings and Foundations: Do not disturb bottom of excavation. Excavate by hand to final grade just before placing concrete reinforcement. Trim bottoms to required lines and grades to leave solid base to receive other work.

3.6 EXCAVATION FOR WALKS AND PAVEMENTS

A. Excavate surfaces under walks and pavements to indicated lines, cross sections, elevations, and subgrades.

3.7 EXCAVATION FOR UTILITY TRENCHES

A. Excavate trenches to indicated gradients, lines, depths, and elevations.

1. Beyond building perimeter, excavate trenches to allow installation of top of pipe below frost line.

B. Excavate trenches to uniform widths to provide the following clearance on each side of pipe or conduit. Excavate trench walls vertically from trench bottom to 12 inches (300 mm) higher than top of pipe or conduit, unless otherwise indicated.

1. Clearance: 12 inches (300 mm) each side of pipe or conduit.

C. Trench Bottoms: Excavate and shape trench bottoms to provide uniform bearing and support of pipes and conduit. Shape subgrade to provide continuous support for bells, joints, and barrels of pipes and for joints, fittings, and bodies of conduits. Remove projecting stones and sharp objects along trench subgrade.

1. For pipes and conduit less than 6 inches (150 mm) in nominal diameter and flat-bottomed, multiple-duct conduit units, hand-excavate trench bottoms and support pipe and conduit on an undisturbed subgrade.
2. For pipes and conduit 6 inches (150 mm) or larger in nominal diameter, shape bottom of trench to support bottom 90 degrees of pipe circumference. Fill depressions with tamped sand backfill.
3. Excavate trenches 6 inches (150 mm) deeper than elevation required in rock or other unyielding bearing material to allow for bedding course.

3.8 SUBGRADE INSPECTION

A. Notify Architect when excavations have reached required subgrade.

B. If Architect determines that unsatisfactory soil is present, continue excavation and replace with compacted backfill or fill material as directed.

C. Proof-roll subgrade below the building slabs and pavements with heavy pneumatic-tired equipment to identify soft pockets and areas of excess yielding. Do not proof-roll wet or saturated subgrades.

1. Completely proof-roll subgrade in one direction, repeating proof-rolling in direction perpendicular to first direction. Limit vehicle speed to 3 mph (5 km/h).
2. Proof-roll with a loaded 10-wheel, tandem-axle dump truck weighing not less than 15 tons (13.6 tonnes).
3. Excavate soft spots, unsatisfactory soils, and areas of excessive pumping or rutting, as determined by Architect, and replace with compacted backfill or fill as directed.

D. Reconstruct subgrades damaged by freezing temperatures, frost, rain, accumulated water, or construction activities, as directed by Architect, without additional compensation.

3.9 UNAUTHORIZED EXCAVATION

A. Fill unauthorized excavation under foundations or wall footings by extending bottom elevation of concrete foundation or footing to excavation bottom, without altering top elevation. Lean concrete fill, with 28-day compressive strength of 2500 psi (17.2 MPa), may be used when approved by Architect.

1. Fill unauthorized excavations under other construction or utility pipe as directed by Architect.

3.10 STORAGE OF SOIL MATERIALS

A. Stockpile borrow soil materials and excavated satisfactory soil materials without intermixing. Place, grade, and shape stockpiles to drain surface water. Cover to prevent windblown dust.

1. Stockpile soil materials away from edge of excavations. Do not store within drip line of remaining trees.

3.11 BACKFILL

A. Place and compact backfill in excavations promptly, but not before completing the following:

1. Construction below finish grade including, where applicable, subdrainage, dampproofing, waterproofing, and perimeter insulation.
2. Surveying locations of underground utilities for Record Documents.
3. Testing and inspecting underground utilities.
4. Removing concrete formwork.
5. Removing trash and debris.
6. Removing temporary shoring and bracing, and sheeting.
7. Installing permanent or temporary horizontal bracing on horizontally supported walls.

B. Place backfill on subgrades free of mud, frost, snow, or ice.

3.12 UTILITY TRENCH BACKFILL

A. Place backfill on subgrades free of mud, frost, snow, or ice.

B. Place and compact bedding course on trench bottoms and where indicated. Shape bedding course to provide continuous support for bells, joints, and barrels of pipes and for joints, fittings, and bodies of conduits.

C. Place and compact initial backfill of subbase material, free of particles larger than 1 inch (25 mm) in any dimension, to a height of 12 inches (300 mm) over the utility pipe or conduit.

1. Carefully compact initial backfill under pipe haunches and compact evenly up on both sides and along the full length of utility piping or conduit to avoid damage or displacement of piping or conduit. Coordinate backfilling with utilities testing.

D. Place and compact final backfill of satisfactory soil to final subgrade elevation.

E. Install warning tape directly above utilities, 12 inches (300 mm) below finished grade, except 6 inches (150 mm) below subgrade under pavements and slabs.

3.13 SOIL FILL

A. Plow, scarify, bench, or break up sloped surfaces steeper than 1 vertical to 4 horizontal so fill material will bond with existing material.

B. Place and compact fill material in layers to required elevations as follows:

1. Under grass and planted areas, use satisfactory soil material.
2. Under walks and pavements, use satisfactory soil material.
3. Under steps and ramps, use engineered fill.
4. Under building slabs, use engineered fill.
5. Under footings and foundations, use engineered fill.

C. Place soil fill on subgrades free of mud, frost, snow, or ice.

3.14 SOIL MOISTURE CONTROL

A. Uniformly moisten or aerate subgrade and each subsequent fill or backfill soil layer before compaction to within 2 percent of optimum moisture content.

1. Do not place backfill or fill soil material on surfaces that are muddy, frozen, or contain frost or ice.
2. Remove and replace, or scarify and air dry otherwise satisfactory soil material that exceeds optimum moisture content by 2 percent and is too wet to compact to specified dry unit weight.

3.15 COMPACTION OF SOIL BACKFILLS AND FILLS

A. Place backfill and fill soil materials in layers not more than 8 inches (200 mm) in loose depth for material compacted by heavy compaction equipment, and not more than 4 inches (100 mm) in loose depth for material compacted by hand-operated tampers.

B. Place backfill and fill soil materials evenly on all sides of structures to required elevations, and uniformly along the full length of each structure.

C. Compact soil materials to not less than the following percentages of maximum dry unit weight according to ASTM D 1557:

1. Under structures, building slabs, steps, and pavements, scarify and recompact top 12 inches (300 mm) of existing subgrade and each layer of backfill or fill soil material at 95 percent.
2. Under walkways, scarify and recompact top 6 inches (150 mm) below subgrade and compact each layer of backfill or fill soil material at 92 percent.
3. Under lawn or unpaved areas, scarify and recompact top 6 inches (150 mm) below subgrade and compact each layer of backfill or fill soil material at 85 percent.
4. For utility trenches, compact each layer of initial and final backfill soil material at 85 percent.

3.16 GRADING

A. General: Uniformly grade areas to a smooth surface, free of irregular surface changes. Comply with compaction requirements and grade to cross sections, lines, and elevations indicated.

1. Provide a smooth transition between adjacent existing grades and new grades.
2. Cut out soft spots, fill low spots, and trim high spots to comply with required surface tolerances.

B. Site Grading: Slope grades to direct water away from buildings and to prevent ponding. Finish subgrades to required elevations within the following tolerances:

1. Lawn or Unpaved Areas: Plus or minus 1 inch (25 mm).
2. Walks: Plus or minus 1 inch (25 mm).
3. Pavements: Plus or minus 1/2 inch (13 mm).

C. Grading inside Building Lines: Finish subgrade to a tolerance of 1/2 inch (13 mm) when tested with a 10-foot (3-m) straightedge.

3.17 SUBSURFACE DRAINAGE

A. Subdrainage Pipe: Single wall perforated PE pipe meeting the requirements of ASTM F 405.

B. Subsurface Drain: Place subsurface drainage geotextile around perimeter of subdrainage trench. Place a 3-inch (75-mm) course of drainage aggregate on subgrade to support subdrainage pipe. Encase subdrainage pipe in drainage aggregate, placed in compacted layers 6 inches (150 mm) thick. Cover subsurface drainage trench with geotextile.

1. Compact each drainage aggregate layer to 85 percent of maximum dry unit weight according to ASTM D 698.

3.18 SUBBASE AND BASE COURSES

A. On prepared subgrade, place subbase course under pavements and walks as follows:
1. Place base course material over subbase course under hot-mix asphalt pavement.
2. Shape subbase and base course to required crown elevations and cross-slope grades.
3. Place subbase and base course 6 inches (150 mm) or less in compacted thickness in a single layer.
4. Place subbase and base course that exceeds 6 inches (150 mm) in compacted thickness in layers of equal thickness, with no compacted layer more than 6 inches (150 mm) thick or less than 3 inches (75 mm) thick.
5. Compact subbase and base course at optimum moisture content to required grades, lines, cross sections, and thickness to not less than 95 percent of maximum dry unit weight according to ASTM D 1557.

B. Pavement Shoulders: Place shoulders along edges of subbase and base course to prevent lateral movement. Construct shoulders, at least 12 inches (300 mm) wide, of satisfactory soil materials and compact simultaneously with each subbase and base layer to not less than 95 percent of maximum dry unit weight according to ASTM D 1557.

3.19 DRAINAGE COURSE

A. Place drainage course on subgrades free of mud, frost, snow, or ice.

B. On prepared subgrade, place and compact drainage course under cast-in-place concrete slabs-on-grade as follows:

1. Install subdrainage geotextile on prepared subgrade according to manufacturer's written instructions, overlapping sides and ends.
2. Place drainage course 6 inches (150 mm) or less in compacted thickness in a single layer.
3. Place drainage course that exceeds 6 inches (150 mm) in compacted thickness in layers of equal thickness, with no compacted layer more than 6 inches (150 mm) thick or less than 3 inches (75 mm) thick.
4. Compact each layer of drainage course to required cross sections and thicknesses to not less than 95 percent of maximum dry unit weight according to ASTM D 698.

3.20 FIELD QUALITY CONTROL

A. Testing Agency: Owner will engage a qualified independent geotechnical engineering testing agency to perform field quality-control testing.

B. Allow testing agency to inspect and test subgrades and each fill or backfill layer. Proceed with subsequent earthwork only after test results for previously completed work comply with requirements.

C. Footing Subgrade: At footing subgrades, at least one test of each soil stratum will be performed to verify design bearing capacities. Subsequent verification and approval of other footing subgrades may be based on a visual comparison of subgrade with tested subgrade when approved by Architect.

D. Testing agency will test compaction of soils in place according to ASTM D 1556, ASTM D 2167, ASTM D 2922, and ASTM D 2937, as applicable. Tests will be performed at the following locations and frequencies:

1. Paved and Building Slab Areas: At subgrade and at each compacted fill and backfill layer, at least 1 test for every 2000 sq. ft. (186 sq. m) or less of paved area or building slab, but in no case fewer than 3 tests.
2. Foundation Wall Backfill: At each compacted backfill layer, at least 1 test for each 100 feet (30 m) or less of wall length, but no fewer than 2 tests.
3. Trench Backfill: At each compacted initial and final backfill layer, at least 1 test for each 150 feet (46 m) or less of trench length, but no fewer than 2 tests.

E. When testing agency reports that subgrades, fills, or backfills have not achieved degree of compaction specified, scarify and moisten or aerate, or remove and replace soil to depth required; recompact and retest until specified compaction is obtained.

3.21 PROTECTION

A. Protecting Graded Areas: Protect newly graded areas from traffic, freezing, and erosion. Keep free of trash and debris.

B. Repair and reestablish grades to specified tolerances where completed or partially completed surfaces become eroded, rutted, settled, or where they lose compaction due to subsequent construction operations or weather conditions.

1. Scarify or remove and replace soil material to depth as directed by Architect; reshape and recompact.

C. Where settling occurs before Project correction period elapses, remove finished surfacing, backfill with additional soil material, compact, and reconstruct surfacing.

1. Restore appearance, quality, and condition of finished surfacing to match adjacent work, and eliminate evidence of restoration to greatest extent possible.

3.22 DISPOSAL OF SURPLUS AND WASTE MATERIALS

A. Disposal: Transport surplus satisfactory soil to designated storage areas on Owner's property. Stockpile or spread soil as directed by Architect.

1. Remove waste material, including unsatisfactory soil, trash, and debris, and legally dispose of it off Owner's property.

END OF SECTION 02300

Information To Build On
Engineering • Consulting • Testing

GEOTECHNICAL EXPLORATION AND ENGINEERING REPORT

FOR THE PROPOSED:

TROY SCHOOL DISTRICT
2004 BOND PROGRAM – PHASE III
CITY OF TROY, OAKLAND COUNTY, MI

GEOTECHNICAL EXPLORATION
AND
ENGINEERING REPORT

FOR THE PROPOSED:

TROY SCHOOL DISTRICT
2004 BOND PROGRAM – PHASE III
SMITH MIDDLE SCHOOL
BOULAN PARK MIDDLE SCHOOL
CITY OF TROY,
OAKLAND COUNTY, MICHIGAN

PREPARED FOR:

TROY SCHOOL DISTRICT
4400 LIVERNOIS AVENUE
TROY, MICHIGAN 48098

BY:

PROFESSIONAL SERVICE INDUSTRIES, INC.
45749 HELM STREET
PLYMOUTH, MICHIGAN 48170
(734) 453-7900

SEPTEMBER 20, 2006

PSI PROJECT NO. 381-55194

psi *Information To Build On*
Engineering • Consulting • Testing

PSI Information To Build On
Engineering • Consulting • Testing

September 20, 2006

Mr. Michael Adamczyk
Troy School District
4400 Livernois Road
Troy, Michigan 48098

RE: Geotechnical Exploration and Engineering Report
Proposed Troy School District
2004 Bond Program – Phase III
Smith Middle School, Boulan Park Middle School
City of Troy, Oakland County, Michigan
PSI Project No. **381-55194**

Dear Mr. Adamczyk:

PSI has completed a geotechnical exploration and engineering report for a portion of Phase III of the Troy School District 2004 Bond Program. This report includes the proposed building addition and parking lot expansion projects at the existing Smith Middle School and Boulan Park Middle School, located in the city of Troy, Oakland County, Michigan. This report presents the results of our observations and analysis and our recommendations for the proposed site development.

PSI appreciates the opportunity to perform this geotechnical study and to assist you and the design team on this project. If you have any questions regarding this report, or if we may be of further service, please contact our office.

Respectfully,
PROFESSIONAL SERVICE INDUSTRIES, INC.,

Jeffrey D. Hestwood, P.E.
Senior Project Engineer

Mahmoud E. El-Gamal, Ph.D., P.E.
Geotechnical Services Manager

1 pc: Enc.
5 cc: Mr. Todd Haner – Kingscott Associates

TABLE OF CONTENTS

EXECUTIVE SUMMARY 1

1.0 PROJECT INFORMATION 4
- 1.1 Project Authorization 4
- 1.2 Project Description 4
- 1.3 Purpose and Scope of Services 5

2.0 SITE AND SUBSURFACE CONDITIONS 6
- 2.1 Site Location and Description 6
- 2.2 Field and Laboratory Services 7
- 2.3 Subsurface Conditions – Smith Middle School 8
- 2.4 Subsurface Conditions – Boulan Park Middle School 9
- 2.5 Groundwater Information 10
- 2.6 Site Seismic Classification 10

3.0 EVALUATION AND RECOMMENDATIONS 12
- 3.1 Site Preparation 12
- 3.2 General Engineered Fill Placement Recommendations 15
- 3.3 Foundation Recommendations 16
- 3.4 Alternate Foundation Recommendations 19
- 3.5 Floor Slab on Grade Recommendations 20
- 3.6 General Pavement Recommendations 21

4.0 CONSTRUCTION CONSIDERATIONS 24
- 4.1 Drainage, Groundwater and Related Considerations 24
- 4.2 Excavation Safety Considerations 24

5.0 REPORT LIMITATIONS 26

APPENDIX

Section No. 1
- Site Vicinity Map (Figure No. 1)
- Earthquake Hazard Risk Map (Figure No. 2)
- Photographs (Photograph No. 1 through No. 3)

APPENDIX, continued

Section No. 2

Smith Middle School Boring Location Plan (Figure No. 3A and 3B)
Test Boring Logs (Boring B-1 through B-4)
General Notes
Laboratory Test Results

Section No. 3

Boulan Park Middle School Boring Location Plan (Figure No. 3C)
Test Boring Logs (Boring B-1 through B-4)
General Notes

GEOTECHNICAL EXPLORATION AND ENGINEERING REPORT
TROY SCHOOL DISTRICT 2004 BOND PROGRAM – PHASE III
CITY OF TROY, OAKLAND COUNTY, MICHIGAN

EXECUTIVE SUMMARY

PSI has completed the geotechnical exploration and engineering report for a portion of Phase III of the Troy School District 2004 Bond Program. This report includes the proposed building additions and parking lot expansion projects at the existing Smith Middle School and Boulan Park Middle School, located in the city of Troy, Oakland County, Michigan. A total of four (4) soil test borings were performed at each project location within the proposed development areas and selected samples were tested in the laboratory.

Smith Middle School

Approximately 4 to 6 inches of dark brown silty topsoil covered the ground surface at the locations of each of the borings performed. A layer of fill or apparent fill consisting of predominately of light brown sand or mottled brown to gray, olive and blueish gray sandy clay with variable percentages of gravel was encountered below the surficial topsoil in each of the borings performed. Layers of dark gray organic silty clay and silty sand were encountered within the fill in the proposed building addition Borings (B-1 and B-2). The fill, apparent fill and organic soils extended to depths ranging from approximately 1.5 to 7 feet below the existing ground surface. Loss-on-ignition (organic content) values ranged from approximately 5.2 to 5.9 percent within the dark gray to black organic silty clay and silty sand layers.

A stratum of apparently native mottled brown and gray to brown sandy clay with few gravel was encountered below the near-surface fill or apparent fill in Borings B-1, B-2 and B-3 and below the surficial topsoil in Boring B-4. The brown sandy clay strata extended through the explored depth of approximately 5 feet in Borings B-3 and B-4 and to a depth of approximately 14 feet below the existing ground surface in Borings B-1 and B-2. The unconfined compressive strength was typically greater than 4.5 tsf, indicating a consistency of hard. A stratum of grayish brown sandy clay to gray silty clay with sand and few gravel was encountered below the brown sandy clay stratum in Borings B-1 and B-2, which extended through the explored depth of the borings. The unconfined compressive strength ranged from greater than 4.5 tsf within the grayish brown sandy clay stratum and decreased to approximately 2.75 to 4 tsf within the underlying gray silty clay stratum, indicating consistencies of hard to very stiff.

Boulan Park Middle School

Approximately 4 inches of dark brown silty topsoil covered the ground surface at the locations of Borings B-1 and B-2. Approximately 3 to 4 inches of asphalt pavement covered the ground surface at the locations of Borings B-3 and B-4. The asphalt was underlain by dark brown to black recycled base course ranging in thickness from approximately 8 to 9 inches. A layer of fill or apparent fill consisting of predominately of mottled brown sandy clay with variable percentages of gravel and organics was encountered below the surficial topsoil in Borings B-1 and B-2. The fill or apparent fill extended to depths ranging from approximately 1.5 to 3 feet below the existing ground surface.

A stratum of apparently native brown silty to clayey sand with few gravel was encountered below the near-surface fill or apparent fill in Boring B-2 and below the existing pavement section in Borings B-3 and B-4. The brown silty, clayey sand stratum extended through the explored depth of approximately 5 feet in Boring B-2 and to a depth of approximately 3 to 4 feet below the existing ground surface in Borings B-3 and B-4. The Standard Penetration Resistance (N) values ranged from 9 to 12 blows per foot indicating consistencies of loose to medium dense. A stratum of apparently native mottled brown to brown and gray sandy clay with few gravel was encountered below the near-surface fill or apparent fill in Boring B-1 and below the brown silty to clayey sand stratum in Borings B-3 and B-4, which extended through the explored depth of approximately 5 feet below the existing ground surface. The Standard Penetration Resistance (N) values ranged from 12 to 23 blows per foot. The unconfined compressive strength was greater than 4.5 tsf, indicating a consistency of hard.

The driller looked for indications of groundwater seepage both during and after completion of the drilling operations. Groundwater or perched water was not encountered in the borings performed at either during drilling or upon completion of the drilling operations at both the Smith Middle School or Boulan park Middle School sites.

A layer of fill or apparent fill contained layers of dark gray organic silty clay and silty sand was encountered at the boring locations performed within the proposed Smith Middle School building additions. The fill, apparent fill and organic soils extended to depths ranging from approximately 6 to 7 feet below the existing ground surface. Due to the significant amount of organic soils encountered at the boring locations performed and in consideration of the relatively small building addition footprints, PSI recommends that the existing uncontrolled fill and organic soils be undercut in their entirety from below the proposed building addition footprints, below both foundation and floor slab areas, prior to placement of engineered fill required to achieve the proposed finished floor subgrade elevation or prior to placement of slab-on-grade floors.

Following proper site preparation, PSI recommends that the proposed Smith Middle School building additions be supported on conventional spread footing foundations designed for an allowable soil bearing pressure of up to 3,000 pounds per square foot (psf) bearing on newly placed and properly compacted engineered fill following removal of the existing uncontrolled fill and organic soils or the foundations should be extended through the fill and organic soils to bear directly on the underlying very stiff to hard native sandy clay soils.

As an alternative to the relatively deep undercut and replacement of the existing uncontrolled fill and organic soils within the proposed building addition footprints at this site, the proposed building additions and floor slabs may be supported on alternate deep foundation system extending through the near-surface fill to and into the underlying native very stiff to hard sandy clay soils. Helical anchors, similar to those manufactured by Atlas Systems, Inc., may be used to support the proposed building additions and floor slabs. An advantage of using a steel anchor system at this site over other deep foundation systems, such as large diameter drilled piers or auger cast piles, is that they may be installed with common small pieces of construction equipment easily fitted with hydraulically driven

torque motors, eliminating the potentially expensive mobilization of large caisson or auger cast drilling equipment. The small pieces of construction equipment may also be easily maneuvered within the relatively small area of the proposed building additions. Helical anchors also provided an instant torque to capacity feedback, which verifies that the required capacity has been achieved. The use of helical anchors for this project will also eliminate the potential need of shoring or underpinning the existing building foundations and floor slab during removal and replacement of the existing uncontrolled fill and organic soils.

Uncontrolled fill or apparent fill consisting predominately of brown sandy clay with variable percentages of gravel and organics was encountered below the surficial topsoil in Smith Middle School and Boulan Park Middle School Borings B-1 and B-2. Based on the borings performed, the fill or apparent fill extended to depths ranging from approximately 1.5 to 3 feet below the existing ground surface. The existing fill encountered at the boring locations performed were generally free of significant organic soils and deleterious materials. However, it would not be unusual for the fill thickness and composition to vary within the site area from that encountered at the individual boring locations. Several options are available for support of the proposed pavements at this site, which are presented in the following report. Each option is associated with a different level of risk concerning the pavement performance. Long-term performance will typically be a function of the quality of the subgrade at the time of construction, and the quality, thickness and strength of the pavement section. The final choice of subgrade preparation alternative should be based on the relative economic and engineering advantages of each.

20-year standard duty and heavy-duty flexible pavement designs have been determined utilizing the DARWin Pavement Design and Analysis System. This program embodies the methodology of the 1993 AASHTO Guide for the Design of Pavement Structures. The results are included in the following report.

This executive summary should not be considered separately from the entire text of this report with all the conclusions and qualifications mentioned herein. Details of our analysis and recommendations are given in the following sections of this report.

1.0 PROJECT INFORMATION

1.1 Project Authorization

Professional Service Industries, Inc. (PSI) has completed a geotechnical exploration and engineering report for a portion of Phase III of the Troy School District 2004 Bond Program. This report includes the proposed building addition and parking lot expansion projects at the existing Smith Middle School and Boulan Park Middle School, located in the city of Troy, Oakland County, Michigan. PSI's work was authorized by Mr. Frank Lams, Purchasing and Budget Supervisor of the Troy School District through Purchase Order No. 00033039. Notice to proceed for this portion of Phase III was given to PSI on September 5, 2006 by Mr. Todd Haner of Kingscott Associates. PSI's work was performed in general accordance with PSI Proposal No. 381-4129 dated May 19, 2004.

1.2 Project Description

Project information was provided to PSI by Mr. Todd Haner of Kingscott Associates. Additional site and project information for Smith Middle School, including the requested soil boring locations, was obtained from the undated "Site Layout Plan", sketch No. C2 prepared by Kingscott Associates and the "Rear Parking Lot", sketch No. C2 dated August 28, 2006 also prepared by Kingscott Associates. Site and project information for Boulan Park Middle School, including the requested soil boring locations, was obtained from the undated "Site Layout Plan", sketch No. C1 dated August 18, 2006 prepared by Kingscott Associates.

Smith Middle School

PSI understands that the proposed project consists of the construction of two (2) additions to the existing Smith Middle School, located at 5835 Donaldson, in the city of Troy, Oakland County, Michigan. The additions will consist of a proposed office addition, approximately 47 feet by 58 feet in plan dimensions, adjacent to the front entry on the east side of the existing building and a proposed classroom addition, approximately 25 feet by 39 feet in plan dimensions, on the south side of the existing school facility. Specific details relative to the proposed construction were not provided. For the purposes of PSI's analysis, we assume that the building additions will be single-story structures with concrete slab-on-grade floors and no basement. The proposed building addition structures are assumed to consist predominately of exterior load-bearing masonry walls with interior non-load bearing partition walls and limited isolated interior columns. PSI estimates that the maximum wall and column loads may be in the range of 3 to 4 kip per lineal foot and 75 kips, respectively. In addition to the proposed building additions, the existing parking lot located on the north side of the building will be expanded from 38 to 55 parking spaces. Site grading information was also not provided. The finished floor elevations of the proposed building additions are assumed to match the finished floor of the existing

building. In addition, the proposed parking lot expansion is assumed to match the elevation of the existing parking lot pavement surface. The existing ground surfaces in the areas of the proposed additions and pavement expansion are relatively flat. Accordingly, PSI estimates that less than approximately 1 to 2 feet of cut or engineered fill placement will be required to achieve the site grades within the proposed building additions and parking lot expansion projects.

Boulan Park Middle School

PSI understands that the proposed project consists of the construction of a new parking lot and bus drop-off/pick-up loop at the existing Boulan Park Middle School, located at 3570 Northfield Parkway, in the city of Troy, Oakland County, Michigan. The proposed parking lot will include 31 parking spaces and will generally be located in the area of the existing bus loop. Site grading information was not provided. For the purposes of PSI's analysis, the proposed parking lot expansion and bus loop pavements are assumed to match the elevation of the existing pavement surface. The existing ground surfaces in the areas of the proposed pavements are relatively flat. Accordingly, PSI estimates that less than approximately 1 to 2 feet of cut or engineered fill placement will be required to achieve the site grades within the proposed parking lot and bus loop pavements.

The geotechnical recommendations presented in this report are based on the available project information, and the results of our geotechnical exploration described in this report. If any of the noted information is considered incorrect or is changed, please inform PSI in writing so that we may amend the recommendations presented in this report if appropriate and if desired by the client. PSI will not be responsible for the implementation of its recommendations when it is not notified of changes in the project.

1.3 Purpose and Scope of Services

The purpose of this study was to explore the subsurface conditions at the site to provide the geotechnical parameters required to prepare recommendations for the design and construction of foundations, floor slabs and pavements for the proposed project. PSI's authorized scope of services included drilling a total of four (4) soil test borings at each project location, laboratory testing of selected samples, an engineering evaluation of the data generated, and the preparation of a geotechnical report.

This report presents available project information, briefly outlines the testing procedures, describes the site and supplementary subsurface conditions, and provides recommendations regarding the following:

- Earthwork considerations for site development.
- Foundation type, depth, net allowable bearing pressure and estimate of potential settlement.
- Criteria for the building floor slab and pavement subgrade preparation and support.
- Pavement section recommendations.

- Comments regarding geotechnical factors that may impact earthwork, foundation construction, subgrade preparation, and performance of the proposed foundations, floor slabs and pavements.

The geotechnical scope of services did not include an environmental assessment for determining the presence or absence of wetlands, hazardous or toxic materials in the soil, bedrock, surface water, groundwater or air on, below or around this site. Any statement in this report or on the boring logs regarding odors, colors, and unusual or suspicious items or conditions are strictly for informational purposes. Prior to the development of any site, an environmental assessment is advisable.

PSI did not provide any service to investigate or detect the presence of moisture, mold or other biological contaminates in or around any structure, or any service that was designed or intended to prevent or lower the risk of the occurrence of the amplification of the same. The Troy School District acknowledges that mold is ubiquitous to the environment with mold amplification occurring when building materials are impacted by moisture. The Troy School District further acknowledges that site conditions are outside of PSI's control, and that mold amplification will likely occur, or continue to occur, in the presence of moisture. As such, PSI cannot and shall not be held responsible for the occurrence or recurrence of mold amplification.

2.0 SITE AND SUBSURFACE CONDITIONS

2.1 Site Location and Description

The project sites are located at the existing Smith Middle School, located at 5835 Donaldson, and Boulan Park Middle School, located at 3570 Northfield Parkway, in the city of Troy, Oakland County, Michigan. The general site location is shown on the Site Vicinity Map in the Appendix as Figure No. 1.

At the time of PSI's geotechnical exploration, the ground surface within the proposed building addition footprints and the proposed parking lot pavement expansion areas at the existing Smith Middle School consisted predominately of landscaped lawn areas. A tree and some landscaping were present within the footprint of the proposed office addition. The elevation of the existing ground surface within the proposed development areas were relatively flat and exhibited a difference in topography of less than approximately 2 feet, based on visual observations.

At the time of PSI's geotechnical exploration at the existing Boulan Park Middle School, the ground surface within the proposed new parking lot and bus loop pavement areas consisted of both asphalt pavement and landscaped lawn areas. A center island area consisting of landscaped lawn with a few trees was present within the existing bus loop pavement and proposed new parking lot area. The elevation of the existing ground surface within the

proposed pavement areas were relatively flat and exhibited a difference in topography across the site of less than approximately 2 feet, based on visual observations. Photographs of typical site conditions at the time of our geotechnical exploration are presented in the Appendix.

2.2 Field and Laboratory Services

The field exploration program consisted of drilling a total of four (4) soil borings at both the Smith Middle School and Boulan Park Middle School project locations. At the Smith Middle School, one (1) boring was performed to a depth of approximately 20 feet below the existing grades within each of the proposed building addition footprints. Two (2) borings were drilled to a depth of approximately 5 feet below the existing grade within the proposed parking lot expansion area. At the Boulan Park Middle School, four (4) borings were performed to a depth of approximately 5 feet below the existing grades within the proposed new parking lot and bus loop pavement areas.

Kingscott Associates selected the number, locations and depths of the borings. PSI staked their locations in the field by measuring from know reference points indicated on the site plans provided. The approximate boring locations are provided on the Boring Location Diagrams, Figure No. 3A through 3C in the Appendix, which were reproduced from the previously referenced sketches prepared by Kingscott Associates.

The drilling operations were performed on September 11, 2006. A truck-mounted drill rig was used to perform the soil borings utilizing 3¼ -inch diameter continuous flight hollow-stem augers to advance the boreholes. Standard Penetration Tests (SPT) were conducted and soil samples were obtained using split spoon sampling procedures at regular intervals not exceeding five (5) feet. Drilling and sampling techniques were performed in general accordance with ASTM Standard D1586. After completion of the drilling operations, the borings were backfilled with auger cuttings and the pavement surfaces were patched with a bituminous cold patch material.

The elevation of the ground surface at the individual boring locations performed at Boulan Park Middle School were estimated from spot elevation information contained on the site plan provided. The elevation of the ground surface at the individual boring locations performed at Smith Middle School were not provided nor was a detailed topographic drawing provided to PSI from which to estimate these elevations. Actual measurements of ground surface elevations at the boring locations were not included in our scope of work. If more accurate elevations are required prior to final design and construction, PSI recommends that a professional land surveyor obtain these elevations. All references to depths on the boring logs and in this report are from the existing ground surface unless otherwise noted.

The recovered soil samples were returned to PSI's laboratory for supplemental visual engineering classification. Selected soil samples were tested in the laboratory to determine soil properties for PSI's engineering evaluation. Laboratory testing on the soil samples

obtained during the field exploration included natural moisture content, loss-on-ignition (organic content), unconfined compression tests and estimating the unconfined compressive strength of the cohesive soils encountered using a calibrated hand penetrometer. The moisture content, organic content, unconfined compression and hand penetrometer test results are indicated on the boring logs opposite the depths at which the samples were obtained. The laboratory tests were performed in general accordance with applicable ASTM procedures. The unused portions of the recovered soil samples obtained during PSI's geotechnical exploration will be placed in storage at PSI's Plymouth Township facility. Unless otherwise requested in writing, the samples will be discarded after 90 days from the submission of the final report.

2.3 Subsurface Conditions – Smith Middle School

Approximately 4 to 6 inches of dark brown silty topsoil covered the ground surface at the locations of each of the borings performed. The actual topsoil thickness may vary across the site from that indicated on the boring logs. A generalized soil description encountered in the borings below the surficial topsoil is as follows:

Stratum 1: Fill/ Organic Soils. A layer of fill or apparent fill consisting of predominately of light brown sand or mottled brown to gray, olive and blueish gray sandy clay with variable percentages of gravel was encountered below the surficial topsoil in each of the borings performed. Layers of dark gray organic silty clay and silty sand were encountered within the fill in proposed building addition (Borings B-1 and B-2). The fill, apparent fill and organic soils extended to depths ranging from approximately 1.5 to 7 feet below the existing ground surface. The moisture contents of the tested soil samples from the fill ranged from approximately 10 to 25 percent. Loss-on-ignition (organic content) values ranged from approximately 5.2 to 5.9 percent within the dark gray to black organic silty clay and silty sand layers.

Stratum 2: Brown Sandy Clay. A stratum of apparently native mottled brown and gray to brown sandy clay with few gravel was encountered below the near-surface fill or apparent fill in Borings B-1, B-2 and B-3 and below the surficial topsoil in Boring B-4. The brown sandy clay strata extended through the explored depth of approximately 5 feet in Borings B-3 and B-4 and to a depth of approximately 14 feet below the existing ground surface in Borings B-1 and B-2. The Standard Penetration Resistance (N) values ranged from 14 to 22 blows per foot. The unconfined compressive strength was typically greater than 4.5 tsf, indicating a consistency of hard. The moisture contents of the tested soil samples from the mottled to brown sandy clay stratum ranged from approximately 10 to 13 percent, indicating a moist condition.

Stratum 3: Gray Sandy Clay/ Silty Clay. A stratum of grayish brown sandy clay to gray silty clay with sand and few gravel was encountered below the brown sandy clay stratum in Borings B-1 and B-2, which extended through the explored depth of the borings. Standard Penetration Resistance (N) values typically ranged from 10

to 20 blows per foot, with a maximum of 31. The unconfined compressive strength ranged from greater than 4.5 tsf within the grayish brown sandy clay stratum and decreased to approximately 2.75 to 4 tsf within the underlying gray silty clay stratum, indicating consistencies of hard to very stiff. The moisture contents of the tested soil samples from the grayish brown to gray sandy clay and silty clay with sand stratum ranged from 11 to 13 percent, indicating a moist condition.

2.4 Subsurface Conditions – Boulan Park Middle School

Approximately 4 inches of dark brown silty topsoil covered the ground surface at the locations of Borings B-1 and B-2. Approximately 3 to 4 inches of asphalt pavement covered the ground surface at the locations of Borings B-3 and B-4. The asphalt was underlain by dark brown to black recycled base course ranging in thickness from approximately 8 to 9 inches. The actual topsoil thickness and pavement section may vary across the site from that indicated on the boring logs. A generalized soil description encountered in the borings below the surficial topsoil or pavement section is as follows:

Stratum 1: Fill. A layer of fill or apparent fill consisting of predominately of mottled brown sandy clay with variable percentages of gravel and organics was encountered below the surficial topsoil in Borings B-1 and B-2. The fill or apparent fill extended to depths ranging from approximately 1.5 to 3 feet below the existing ground surface. The moisture content of the tested soil sample from the fill was approximately 12 percent.

Stratum 2: Brown Silty, Clayey Sand. A stratum of apparently native brown silty to clayey sand with few gravel was encountered below the near-surface fill or apparent fill in Boring B-2 and below the existing pavement section in Borings B-3 and B-4. The brown silty, clayey sand stratum extended through the explored depth of approximately 5 feet in Boring B-2 and to a depth of approximately 3 to 4 feet below the existing ground surface in Borings B-3 and B-4. The Standard Penetration Resistance (N) values ranged from 9 to 12 blows per foot indicating consistencies of loose to medium dense. The moisture contents of the tested soil samples from the brown silty to clayey sand stratum ranged from approximately 9 to 12 percent, indicating a moist condition.

Stratum 3: Brown Sandy Clay. A stratum of apparently native mottled brown to brown and gray sandy clay with few gravel was encountered below the near-surface fill or apparent fill in Boring B-1 and below the brown silty to clayey sand stratum in Borings B-3 and B-4, which extended through the explored depth of approximately 5 feet below the existing ground surface. The Standard Penetration Resistance (N) values ranged from 12 to 23 blows per foot. The unconfined compressive strength was greater than 4.5 tsf, indicating a consistency of hard. The moisture contents of the tested soil samples from the sandy clay stratum ranged from approximately 9 to 13 percent, indicating a moist condition.

The above subsurface description is of a generalized nature to highlight the major subsurface stratification features and material characteristics. The boring logs should be reviewed for specific information at individual boring locations. These records include soil descriptions, stratification, penetration resistance, location of the samples, and laboratory test data. The soil boring logs are presented in the Appendix.

The stratification shown on the boring logs represent the conditions only at the actual boring locations. Variations may occur and should be expected between boring locations. The stratification represents the approximate boundary between subsurface materials; however, the actual transition may be gradual. Water level information obtained during field operations is also shown on the boring logs. The boring logs were prepared on the basis of the laboratory testing and supplemental visual engineering classification, as well as the field logs of the soil conditions encountered.

2.5 Groundwater Information

The driller looked for indications of groundwater seepage both during and after the completion of the drilling operations. Groundwater or perched water was not encountered in the borings performed at either during drilling or upon completion of the drilling operations at both the Smith Middle School or Boulan park Middle School sites.

The groundwater levels discussed herein and shown on the boring logs represent the conditions at the time of the measurements. It is possible for the groundwater table to vary within the depths explored during other times of the year, depending upon climatic and rainfall conditions (seasonal fluctuation). Groundwater monitoring wells are required to accurately define the position and fluctuation of the groundwater table, especially if a boring is drilled in cohesive soil, where several days or weeks may be required for the groundwater to reach a static level. The installation of such monitoring wells was not included in the scope of services for this project. The depth at which the soil color changes from brown to gray is often an indication of the long-term piezometric level in this area. Based on the borings performed, the long-term piezometric level at the Smith Middle School site may be at a depth of approximately 14 feet below the existing ground surface.

2.6 Site Seismic Classification and Liquefaction Potential

Oakland County in Michigan lies in the Central Stable Tectonic Region and in the Seismic Zone 1 of probable seismic activity of the Building Officials Congress of America (BOCA), National Building Code (1993) and the Uniform Building Code (UBC). This zone indicates that minor damages due to occasional earthquakes might be expected in this area. In the 2003 Michigan Building Code (MBC), the State of Michigan has adopted the provisions of the 2000 International Building Code (IBC). The Site Class is based on a weighted average of known or estimated soil properties for the uppermost 100 feet of the subsurface profile. Soil borings at the project site extended to a maximum depth of approximately 15 feet below the existing ground surface. Based on regional geologic mapping, PSI anticipates that the subsurface conditions below the explored depth may generally consist of dense/stiff glacial

drift underlain by the Coldwater Shale Formation at a depth in excess of 100 feet. Based on our review of the available data and the weighted average of the Standard Penetration Test (SPT) N-values and unconfined compressive strength tests through the upper 100 feet of the soil profile, we recommend that the seismic design for this project be based on Site Class D.

Smith Middle School

The 2002 USGS NEHRP probabilistic ground motion values for the site, which is located near latitude 42.62093 and longitude -83.14024, are as follows based on Site Class D:

Period (seconds)	2% Probability of Event in 50 years* (%g)	Site Coefficient F_a	Site Coefficient F_v
PGA	4.95	Na	Na
0.2 (S_a)	11.02	1.60	Na
1.0 (S_1)	4.27	Na	2.40

*At the nearest grid point (lat: 42.62093, long: -83.14024)

Boulan Park Middle School

The 2002 USGS NEHRP probabilistic ground motion values for the site, which is located near latitude 42.57016 and longitude -83.20416, are as follows based on Site Class D:

Period (seconds)	2% Probability of Event in 50 years* (%g)	Site Coefficient F_a	Site Coefficient F_v
PGA	5.04	Na	Na
0.2 (S_a)	11.18	1.60	Na
1.0 (S_1)	4.31	Na	2.40

*At the nearest grid point (lat: 42.57016, long: -83.20416)

The site coefficients F_a and F_v were interpolated from IBC Tables 1615.1.2(1) and 1615.1.2(2) as a function of the site classification and the mapped spectral response acceleration at the short (S_a) and 1 second (S_1) periods.

The development of shear strains tending to cause liquefaction of sand deposits is governed by the character of the ground motion (i.e. acceleration and frequency), soil type, groundwater level and in-situ stress conditions. Very loose to loose sands and sands below the water table are more likely to liquefy than dense sands and sands above the water table. PSI believes the risk of liquefaction occurring at this site is low based on the predominately cohesive soil profile and the site being located in a low seismic activity area.

3.0 EVALUATION AND RECOMMENDATIONS

Based on the available soil and project information, the site generally appears to be suitable for the proposed developments. The proposed building additions may be supported on conventional shallow spread footing foundations bearing on suitable native soils or on newly placed and properly compacted engineered fill materials. However, some subgrade preparation may be required to remove all or portions of the surficial uncontrolled fill materials encountered below the proposed building footprints and portions of the proposed pavement areas.

PSI has made our analysis based on the information developed during this exploration. The resulting recommendations are given in the following sections. If our estimations or understandings of the project are considered incorrect or if conditions during construction are significantly different from those described in this report, please contact PSI immediately in writing so that we may amend our recommendations presented in this report if appropriate and if desired by the client.

3.1 Site Preparation

3.1.1 Proposed Building Areas

Prior to site grading activities or excavation for foundation elements, existing underground utilities should be identified and rerouted or properly abandoned in-place, if necessary. Existing utilities that are not re-routed or abandoned should be adequately marked and protected to minimize the potential for damage during construction.

PSI recommends that the existing surficial topsoil, landscaping, trees, weeds and brush and soft or frozen soils encountered be stripped from within the proposed building addition footprints. Resulting excavations extending below the proposed grades should be backfilled with granular engineered fill and/or specified materials, such as dense-graded aggregate or flowable fill to the final design grade.

A layer of fill or apparent fill consisting of predominately of light brown sand or mottled brown to gray, olive and blueish gray sandy clay with variable percentages of gravel was encountered below the surficial topsoil in each of the proposed building addition Borings B-1 and B-2. The fill contained layers of dark gray organic silty clay and silty sand. The fill, apparent fill and organic soils extended to depths ranging from approximately 6 to 7 feet below the existing ground surface. Loss-on-ignition (organic content) values ranged from approximately 5.2 to 5.9 percent within the dark gray to black organic silty clay and silty sand layers.

Uncontrolled fills, especially those containing organics and deleterious materials, may experience significant volume changes, resulting in excessive settlement, poor foundation and structure performance including faulting and cracking, when subjected to loads from

foundations, floor slabs and engineered fill placed over them. Due to the significant amount of organic soils encountered at the boring locations performed and in consideration of the relatively small building addition footprints, PSI recommends that the existing uncontrolled fill and organic soils be undercut in their entirety from below the proposed building addition footprints, below both foundation and floor slab areas, prior to placement of engineered fill required to achieve the proposed finished floor subgrade elevation or prior to excavation for foundation elements in current at-grade areas of the site.

Based on the borings performed, the fill, apparent fill and organic soils extended to depths ranging from approximately 6 to 7 feet below the existing ground surface. However, it would not be unusual for the fill thickness and composition to vary within the site area from that encountered at the individual boring locations. In addition uncontrolled fill, organic soils or otherwise unsuitable soils may be present at other locations within the proposed building addition footprints that were not disclosed by the borings. The exact depth of unsuitable soil removal should be determined by PSI at the time of construction.

Where undercut excavations are performed adjacent to shallow foundations supporting the existing building structure, care must be taken so as not to undermine these foundations during removal of the adjacent unsuitable soil materials. If possible, PSI recommends maintaining a minimum excavation slope of 1:1 (horizontal:vertical) away from the existing foundations and floor slab. Where unsuitable materials extend up to and below the foundations supporting the existing building or if safe lateral distances are not available to accommodate a stable slope for the excavation, it will be necessary to permanently or temporarily shore or underpin these footings.

Following undercutting the existing uncontrolled fill and organic soils from within the proposed building addition footprints, the excavation should be backfilled to the designed subgrade elevation as outlined later in this report.

3.1.2 Proposed Pavement Areas

PSI recommends that the existing surficial topsoil and pavement section and underlying recycled base course be stripped from within the proposed parking lot and bus loop pavement areas. Alternately, the existing pavements may be milled and stockpiled on-site for later use as aggregate base below the proposed new pavements.

As indicated previously, fill or apparent fill consisting predominately of brown sandy clay with variable percentages of gravel and organics was encountered below the surficial topsoil in Smith Middle School and Boulan Park Middle School Borings B-1 and B-2. Based on the borings performed, the fill or apparent fill extended to depths ranging from approximately 1.5 to 3 feet below the existing ground surface. The existing fill encountered at the boring locations performed were generally free of significant organic soils and deleterious materials. However, it would not be unusual for the fill thickness and composition to vary within the site area from that encountered at the individual boring locations. In addition uncontrolled fill, organic soils or otherwise unsuitable soils may be present at other locations of the site that

were not disclosed by the borings. Where significant organics are exposed at the proposed pavement subgrade elevations, PSI's recommendation is that these soils be undercut in their entirety and replaced with clean engineered fill. However, if the owner is willing to assume the risks in doing so, some or all of the fill and organic soils could be left in place for support of the proposed pavements only, as outlined below.

Several options are available for support of the proposed pavements at this site. **Option No. 1** consists of completely removing the near-surface uncontrolled fill and organic containing native soils throughout the proposed pavement areas and backfilling with a clean engineered fill, as recommended above. The pavements could then be grade-supported directly on the newly placed and properly compacted clean engineered fill. **Option No. 2** consists of grade supporting the proposed pavements on newly placed and properly compacted clean engineered fill following a partial depth undercut of the near surface uncontrolled fill or organic-containing soils. **Option No. 3** consists of grade supporting the proposed pavements directly over the existing fill materials or organic soils following proof rolling of the exposed subgrade without any undercut.

Each option is associated with a different level of risk concerning the pavement performance. Long-term performance will typically be a function of the quality of the subgrade at the time of construction, and the quality, thickness and strength of the pavement section. Therefore, it is important to provide proper subgrade preparation to obtain as long a pavement service life as possible. The most critical portion of the subgrade is the upper 3-foot section. This zone provides the primary strength needed for support of the pavement section. Poorer soil conditions at depth may lead to general pavement subsidence, however, generally will not lead to direct pavement failure, provided a highly stable 3-foot thick subgrade layer is present or constructed. The final choice of subgrade preparation alternative should be based on the relative economic and engineering advantages of each.

Option No. 1, which includes mass over-excavation and replacement of the existing fill and organic-containing soils is relatively costly, but provides a high level of confidence regarding pavement performance. Options No. 2 and No. 3, outlined above, include pavements constructed with all or a portion of the existing fill or organic soils left in place below the pavements. If Option No. 2 is selected, partial depth undercutting should extend to a sufficient depth to provide a minimum of 18 to 24 inches of stable, properly placed and compacted, clean engineered fill and a minimum of 8 inches of crushed aggregate base course beneath the pavement. For both Options No. 2 and No. 3, the exposed surface, following site stripping or partial depth undercutting, should be proofrolled/proof compacted with a large, smooth-drummed vibratory roller or heavy rubber-tired vehicle, prior to placement of engineered fill or base course aggregate. The proofrolling/proof compaction process will improve the density of the existing near-surface fill material or organic soils and any soils disturbed during site stripping. The compaction should continue until no additional densification is observed with additional passes. Areas that exhibit instability or are observed to rut or deflect excessively under the moving load should be further undercut, stabilized by aeration, drying (if wet) and undergo additional compaction to attain a stable finished

subgrade. The proofrolling/proof compacting and undercutting activities should be performed during a period of dry weather and should be witnessed by a competent soil technician.

Additional fill required to achieve the proposed pavement subgrade elevations should be placed and compacted as outlined in the following section of this report.

The risk of poor pavement performance can be reduced but not completely eliminated by partial depth undercutting and replacement of the uncontrolled fill and organic soils or proofrolling/proof compacting of the uncontrolled fill in-place below the proposed pavements. A risk remains of poor pavement performance remains due to the inherent uncertainty associated with supporting at-grade structures over existing uncontrolled fill or organic-containing soils, which the Owner must recognize and accept if Options No. 2 or No. 3 are adopted. If the Owner is unwilling to accept this risk, then the uncontrolled fill and organic soils should be removed in their entirety from below the proposed pavements as outlined for the building area site preparation and Option No. 1 above.

3.2 General Engineered Fill Placement Recommendations

After stripping the surficial topsoil and totally or partially undercutting the existing fill and organic soils, the exposed soils should be thoroughly proof rolled/compacted with a large, heavy rubber-tired vehicle or smooth-drummed vibratory roller. Areas that exhibit instability or are observed to rut or deflect excessively under the moving load should be further undercut, stabilized by aeration, drying (if wet) and additional compaction to attain a stable finished subgrade. The proof rolling/compacting and undercutting activities should be performed during a period of dry weather and should be witnessed by a competent soil technician.

Where subgrade conditions are not improved through aeration, drying and compaction, or where undercut and replacement is considered impractical due to the underlying soil and groundwater conditions, it may be possible to stabilize localized areas of subgrade instability with a woven geotextile, and/or a layer of well graded crushed concrete or well graded coarse aggregate such as MDOT 6AA or MDOT 21AA. The need for the use of geotextile fabric and/or the thickness and gradation requirements of the crushed aggregate layer required should be determined at the time of the subgrade preparation, based on the condition of the exposed subgrade at the time of construction. The subgrade should be stabilized prior to placement of engineered fill, excavation of foundation elements and placement of the sand base or aggregate base course in floor slab and pavement areas. After subgrade preparation and observation have been completed, fill placement required to bring the site to the final grade may begin. Fill or backfill supporting at-grade building and pavement structures should be an environmentally clean material, free of organic matter, frozen soil, or other deleterious material. The material proposed to be used as engineered fill should be evaluated and approved for use by a competent geotechnical engineer prior to placement in the field. The structural fill should be compacted to at least 95% of the Modified Proctor maximum dry density as determined by ASTM D 1557. The subgrade soil below pavements and floor slabs should be scarified and compacted to not less than 95% of its

maximum dry density as determined by ASTM D1557, for a minimum depth of 12 inches below the final graded surface.

Fill materials should be placed in maximum horizontal lifts of 8 inches of loose material and should be compacted within the range of ±2% of the optimum moisture content value. Each lift of engineered fill should be tested for conformance to the project density requirements by a representative of PSI prior to placement of subsequent lifts. A minimum of one test per 2,500 square feet of building area and one test per 5,000 square feet of parking area should be performed for each lift, unless otherwise specified by the engineer.

The moisture/density relationship (proctor) of the material to be used as engineered fill should be evaluated by a competent geotechnical engineer prior to placement in the field. PSI recommends one proctor test for every 5,000 cubic yards of fill up to 25,000 cyds and one test per each 50,000 cyds of fill thereafter or change of material. Moisture contents should be adjusted to the proper levels prior to placement and compaction. Adequate compaction will not be achieved if the fill is in a saturated condition. Wet soils may require drying or mixing with dry soil to facilitate compaction. If water must be added to dry soil, it should be uniformly applied and thoroughly mixed into the soil by disking or scarifying prior to compaction.

PSI recommends that imported cohesive soils used as engineered fill below at-grade structural elements have a liquid limit less than 40 percent and a plasticity index in the range of 10 to 25. A sheep's foot roller is recommended for compaction if cohesive soils are used. PSI recommends that imported granular soils conform to the gradation requirements of MDOT Class II granular material. In addition, free-draining, non-plastic granular material such as MDOT Class II granular material is recommended for use as backfill against foundations and below grade walls. Vibratory compaction equipment should be used for compaction in granular soils. Small, hand-operated compaction equipment should be used in confined spaces and against below-grade walls and foundations.

Topsoil, existing fill material, organic or other deleterious materials, which are removed or uncovered during site grading and subgrade undercut operations, foundation and utility excavations at this site, should be wasted in non-load bearing areas such as landscaped areas or removed from the site as directed by the project's engineer and should not be reused as engineered fill in other areas of the site.

3.3 Foundation Recommendations

A layer of fill or apparent fill consisting of predominately of light brown sand or mottled brown to gray, olive and blueish gray sandy clay with variable percentages of gravel was encountered below the surficial topsoil in each of the proposed building addition Borings B-1 and B-2. The fill contained layers of dark gray organic silty clay and silty sand. These soils are unsuitable for foundation support. Prior to excavation for the proposed building foundations, the site should be prepared as recommended previously in this report. PSI recommends that these soils be undercut in their entirety from below the proposed

foundations and backfilled with engineered fill. Based on the borings performed, excavation depths of approximately 6 to 7 feet below the existing site grades may be required to remove the uncontrolled fill and organic soils. However, it would not be unusual for the fill thickness and composition to vary within the proposed building addition footprints from that encountered at the individual boring locations.

Following proper site preparation, PSI recommends that the proposed Smith Middle School building additions be supported on conventional spread footing foundations designed for an allowable soil bearing pressure of up to 3,000 pounds per square foot (psf) bearing on newly placed and properly compacted engineered fill following removal of the existing uncontrolled fill materials and organic soils or the foundations should be extended through the fill and organic soils to bear directly on the underlying very stiff to hard native sandy clay soils.

Compression and consolidation of the native soils and engineered fill resulting from the foundation will result in measurable increments of soil settlements. The settlement potential is a function of the applied soil pressure below the footing as well as the width of the footing. Based on the anticipated foundation loads, PSI has analyzed a typical continuous wall footing width of up to approximately 2.0feet and a typical spread footing foundation width in the range of approximately 4 to 5 feet. Based on the results of the field and laboratory tests and recommended site preparation activities, PSI estimates that total settlement of the properly compacted engineered fill materials and underlying native soils and may be on the order of 1inch or less for the anticipated wall and column loads and the above recommended bearing pressure.

Differential settlement between two, newly constructed adjacent columns bearing on similar soils may be up to approximately 50% of the total settlement. Where adjacent foundations bear on dissimilar subgrades or were layers of weaker soils are present within the primary zone of influence below the foundations, differential settlement may be 75% or more of the total settlement. PSI recommends that the structural engineer determine if the estimated total and differential settlements are tolerable for the structure type proposed.

PSI recommends that exposed foundation excavation inverts be observed and tested by a representative of PSI prior to steel or concrete placement to document that the observed conditions are consistent with the geotechnical report. This is especially important at this site to verify that all existing uncontrolled fill and organic soils have been removed in their entirety from below the proposed building footprint and that all engineered fill soils have been properly placed and compacted. If soft and/or unsuitable soil material is encountered at or below the designed foundation bearing elevation, the footing bottom should be extended to adequate bearing soil. Alternatively, over-excavation of unsuitable soil sections may be backfilled to the foundation level using compacted dense-graded aggregate materials or lean concrete. Where the removal of localized unsuitable bearing material is performed beneath the proposed footings and the excavation is backfilled with compacted fill materials, the excavation must extend laterally beyond the perimeter of the foundation for a distance equal to one-half of the thickness of the engineered backfill placed below the footing bottom. The

over excavation is necessary for proper support of lateral loads exerted through the fill by the foundations.

Footing drains should be incorporated where foundations are extended to bear within cohesive soil deposits and permeable granular backfill soils are used or where fine grained granular soils are used as backfill below the foundations following removal of the unsuitable soils. The drains will reduce water from collecting in the granular backfill.

Where granular engineered fill are present at the foundation bearing elevation, PSI recommends that foundation inverts be compacted in place by several passes of a vibratory compactor, prior to placement of any formwork or foundation concrete, to densify the underlying sands and any soils disturbed during excavation. The compaction should continue until no additional densification is observed with additional passes.

Exterior footings and footings in unheated areas should be located at a minimum depth of 42 inches below the final exterior grade for proper protection against frost during normal winters. Interior footings may be supported at a shallower depth, while providing necessary clearance for floor slab and utility construction, provided they are bearing on suitable, undisturbed native soils or properly placed and compacted engineered fill. A minimum depth of 24 inches is recommended for stability. If the building is to be constructed during the winter months or if footings will likely be subjected to freezing temperatures after foundation construction, then all footings should be adequately protected from freezing.

Where new foundations supporting the proposed building additions are placed adjacent to foundations supporting the existing building structure, they should be placed at the same elevation as the existing footings to minimize superposition of loads. Foundations should then be stepped up or down as necessary at a grade no steeper than two units horizontal to one unit vertical to achieve the elevation of the new foundations. Care should also be exercised where excavations are performed near the existing structure so as to prevent undermining of the existing foundations and floor slab. Temporary shoring may be needed if safe lateral distances are not available to accommodate a stable slope for the excavation sidewalls. In addition, a construction joint should be provided at the existing building and new addition interface to allow for independent movement between the existing building and proposed additions.

Minimum dimensions of 30 inches for column footings and 18 inches for continuous footings and trench footings bearing on the newly placed engineered fill should be used in foundation design to minimize the possibility of a local bearing capacity failure. PSI recommends that the design of masonry walls include provisions for vertical control joints to minimize the effects of "cosmetic" cracking caused by differential settlement. In addition, we recommend that continuous footings be suitably reinforced to make them as rigid as possible.

The foundation excavation should be observed and concrete placed as quickly as possible to avoid exposure of the footing bottoms to wetting and drying. Surface run-off water should be drained away from the excavations and not be allowed to pond. The foundation concrete should be placed during the same day the excavation is made. If it is required that footing excavations be left open for more than one day, they should be protected to reduce evaporation or entry of moisture.

3.4 Alternate Foundation Recommendations

As an alternative to the relatively deep undercut and replacement of the existing uncontrolled fill and organic soils within the proposed building addition footprints at this site, the proposed building additions and floor slabs may be supported on alternate deep foundation system extending through the near-surface fill to and into the underlying native very stiff to hard sandy clay soils. Helical anchors, similar to those manufactured by Atlas Systems, Inc., may be used to support the proposed building additions and floor slabs. An advantage of using a steel anchor system at this site over other deep foundation systems, such as large diameter drilled piers or auger cast piles, is that they may be installed with common small pieces of construction equipment easily fitted with hydraulically driven torque motors, eliminating the potentially expensive mobilization of large caisson or auger cast drilling equipment. The small pieces of construction equipment may also be easily maneuvered within the relatively small area of the proposed building additions. Helical anchors also provided an instant torque to capacity feedback, which verifies that the required capacity has been achieved. The use of helical anchors for this project will also eliminate the potential need of shoring or underpinning the existing foundations and floor slab during removal and replacement of the existing uncontrolled fill and organic soils.

Based on the borings performed, PSI recommends that the helical anchors be extended through the near-surface uncontrolled fill and organic soils to and into the underlying very stiff to hard sandy clay soils below a depth of approximately 7 to 9 feet below the existing grades. PSI estimates that an anchor fitted with conventional 8-10-12 inch diameter helixes may achieve an ultimate capacity on the order of 50 to 70 kips per anchor where extended a minimum of 8 to 10 feet into the recommended bearing stratum. The actual anchor capacity will be a function on the number and size of helixes used and the depth of embedment. An appropriate factor of safety should be applied to the estimated ultimate anchor capacity. The anchors are typically spaced at 6 to 8 feet on center below continuous bearing walls and floor slabs. Two to three anchors per individual column foundation may be required for stability.

The proposed helical pile foundation system will experience settlement. Based on PSI's understanding of the helical pile system, pile movement on the order of approximately 8 to 10 percent of the average helix diameter is required to fully mobilize the capacity of the anchors. Accordingly, for a conventional 8-10-12 helix arrangement, pile movement on the order of 0.8 to 1.0 inches should be anticipated. Additional elastic settlement will occur below the pile tip due to point loads transferred from the pile tip to the underlying bearing soil. Based on the available soil boring information, anticipated pile depth and loading, PSI

estimates that the additional elastic settlement may be on the order of ¼ inch or less assuming a minimum thickness of 4 to 5 feet of competent, very stiff to hard silty or sandy clay soils are present below the anchor tip.

Helical anchors are a proprietary foundation system. If helical anchors are of interest, PSI would be pleased to work with an installation contractor to better define the scope of work for this site and to provide a specific allowable pile/anchor capacity and estimated settlement for use in the foundation and floor slab design as well as the associated costs. The soil borings performed for this project extended only to depth of approximately 20 feet below the existing ground surface. Sufficient soil boring data may therefore not be available for the proper design and support of helical anchors or other deep foundation systems. Additional soil boring data and depth may be necessary prior to final design and installation.

3.5 Floor Slab-on-Grade Recommendations

Due to the significant amount of organic soils encountered at the boring locations performed and in consideration of the relatively small building addition footprints, PSI recommends that the existing uncontrolled fill and organic soils be undercut in their entirety from below the proposed building addition floor slabs. Accordingly, prior to the placement of slab-on-grade concrete floors the subgrade should be prepared as outlined previously in the "Site Preparation – Proposed Building Area" section of this report or Option No. 1 presented for the proposed pavement area site preparation. If the owner is willing to assume the risks in doing so, some or all of the fill and organic soils could be left in place for support of the proposed floor slabs, as outlined previously in Option No. 2 and No.3 of the "Site Preparation – Proposed Pavement Areas" section of this report.

PSI recommends that the vertical subgrade modulus, k be limited to 125 pounds per cubic inch for this site, as determined by a 1-foot by 1-foot plate load test, in floor slab-on-grade design calculations.

PSI recommends that a minimum of 4 inches of free-draining, compacted aggregate be placed beneath the floor slab-on-grade to facilitate fine grading and provide increased support for the slabs-on-grade as well as to provide a capillary break below the floor slab. The aggregate should comply with the recommendations of the current version of ACI 302.1, "Concrete and Slab Construction." In areas with carpet, tile or other moisture-sensitive floor finishes, a vapor retarder should be placed in accordance with ACI 302.1, local building codes and the flooring manufacturers recommendations.

The floor slabs should have an adequate number of joints to reduce cracking resulting from any differential movement and volume changes during curing. The floor slab should not be rigidly connected to columns, walls, or foundations. Proper joints should be provided at the junctions of the slab and foundation system so that a limited amount of independent movement can occur without causing distress. The floor slabs should be suitably reinforced to make them as rigid as practical.

If a helical anchor foundation system is used for the support of the proposed building additions in lieu of removal and replacement of the existing uncontrolled fill and organic soils, then the proposed building addition floor slabs must be designed as a structural slab supported by the helical anchor foundation system.

3.6 Pavement Recommendations

Prior to the placement of the aggregate base course, the pavement subgrade should be prepared as presented previously in the "Site Preparation – Proposed Pavement Areas" section of this report. The long-term performance of the pavement section will typically be a function of the quality of the subgrade at the time of construction, and the quality, thickness and strength of the pavement section. The most critical portion of the subgrade is the upper 3-foot section. This zone provides the primary strength needed for support of the pavement section. Exclusive of highly organic soils, poorer soil conditions at depth may lead to general pavement subsidence, however, generally will not lead to direct pavement failure, provided a highly stable 3-foot thick subgrade layer is present or constructed. Accordingly, the risk of poor pavement performance can be reduced but not completely eliminated by partial depth undercutting and replacement of the uncontrolled fill and/or proof rolling/compacting of the uncontrolled fill in-place. A risk remains of poor pavement performance due to the inherent uncertainty associated with supporting at-grade structures over existing uncontrolled fill, which the Owner must recognize and accept if any uncontrolled fills or organic soils are left in-place below the pavements. The final choice of subgrade preparation alternative should be based on the relative economic and engineering advantages of each.

A 20-year flexible pavement design was determined utilizing the DARWin Pavement Design and Analysis System. This program embodies the methodology of the 1993 AASHTO Guide for the Design of Pavement Structures.

At the time of this report, no specific design parameters or traffic volume data were available. For the purposes of this report, PSI has used a value of 50,000 18-kip ESAL's over the design period for a standard-duty pavement section to be used in general parking areas. This value is the minimum 15 to 20 year design value recommended for use by AASHTO for this type of pavement application. In addition, we have used a value of 150,000 18-kip ESAL's over the design period for the heavy duty pavement section. PSI recommends that heavy duty pavement section be used for the bus drop-off/pick-up loop.

PSI's scope of services did not include extensive sampling and CBR testing of the existing subgrade soils or potential sources of imported fill for the specific purpose of a detailed pavement analysis for the proposed pavements. Based on our experience with similar soils in the project area, PSI has estimated a CBR value of 5.0 for the near-surface native sandy clay or silty, clayey sand soils encountered at the boring locations performed within the proposed pavement areas. Based on this value, an effective roadbed soil resilient modulus of 5,800 psi was used in the pavement design. The effective resilient modulus takes into account seasonal effects on the subgrade including weakening during the spring

thaw and frozen conditions during the winter months. Other design parameters used in the pavement design include a terminal serviceability of 2.0, an initial serviceability of 4.2, reliability of 85%, subgrade drainage coefficient of 0.7, and a standard deviation of 0.45.

For the soil conditions and anticipated traffic loads, PSI has calculated minimum required flexible design structural numbers of 2.48 and 2.94 for the standard duty and heavy duty pavement sections, respectively. Copies of the DARWin Pavement Design inputs and outputs are included in the Appendix. Based on these outputs and local practices, PSI recommends the following minimum pavement section:

Recommended Standard Duty Flexible Pavement Section Smith Middle School and Boulan Park Middle School				
Pavement Material	**Section Thickness (inches)**	**Structural Layer Coefficient**	**Drainage Coefficient**	**Structural Number**
Bituminous Surface Course (MDOT 13A)	1.5	0.44	1.0	0.66
Bituminous Leveling Course (MDOT 13A)	2.0	0.44	1.0	0.88
Aggregate Base Course (MDOT 21AA Limestone)	9.0	0.14	0.75	0.95
			Total SN = 2.49>2.48	

Recommended Heavy Duty Flexible Pavement Section Boulan Park Middle School				
Pavement Material	**Section Thickness (inches)**	**Structural Layer Coefficient**	**Drainage Coefficient**	**Structural Number**
Bituminous Surface Course (MDOT 13A)	1.5	0.44	1.0	0.66
Bituminous Leveling Course (MDOT 13A)	2.5	0.44	1.0	1.10
Aggregate Base Course (MDOT 21AA Limestone)	12.0	0.14	0.75	1.26
			Total SN = 3.02>2.94	

The flexible pavement designs should incorporate high quality, high stability plant mixes being supplied with design properties and aggregate gradation meeting or exceeding the requirements as outlined in the 2003 MDOT Standard Specification Section 501. The crushed aggregate base course should conform to the requirements of MDOT Class 21AA. Alternately, milled and stockpiled asphalt may be substituted for all or a portion of the MDOT 21AA aggregate base course. However, if recycled asphalt base is used, PSI recommends reducing the layer coefficient to 0.12.

A heavy-duty rigid pavement design has also been determined utilizing the "AASHTO Guide for Rigid Pavement Design." Parameters used include a concrete modulus of elasticity of 3.6 x 10^6 psi, a concrete modulus of rupture of 645 psi and a mean effective k value of 125psi/in. The mean effective k modulus takes into account the thickness of the base materials and the slab as well as seasonal effects on the subgrade and base materials, including weakening during the spring thaw and frozen conditions during the winter months. The results are shown on the following table:

Alternate Heavy Duty Rigid Pavement Section Boulan Park Middle School	
Pavement Material	**Section Thickness (inches)**
Type I Portland Cement Concrete (MDOT Grade P-1)	6.0
Aggregate Base Course (MDOT 4G or 21AA)	6.0

The concrete mix design should consist of a minimum 6-bag, normal weight concrete with a minimum 28-day compressive strength of 4,000 psi when tested in accordance with ASTM C39. The concrete should contain an air entrainment mixture to resist the effects of freezing and thawing.

The pavement should contain wire mesh reinforcement in the pavement section and should be suitably doweled at construction joints to permit the proper transfer of loads. The design of joints, joint spacing, doweling and steel/wire mesh reinforcement was not included in our scope of services, but should conform to the applicable Oakland County or MDOT requirements.

It should be recognized that all pavements require regular maintenance and occasional repairs to keep the pavements in a serviceable condition. Of particular value, is a timely sealing of joints and cracks, which if left un-repaired, can serve to permit water to enter the pavement section and cause rapid deterioration of the pavement during freeze-thaw cycles. The need for such maintenance and repair is not necessarily indicative of premature pavement failure. However, if appropriate maintenance and repairs are not performed on a timely basis, the serviceable life of the pavement can be reduced significantly.

The pavement surface should be adequately sloped to promote good surface drainage and to reduce water infiltration into the base course. Water should not be allowed to pond

behind curbs and saturate the pavement base stone. In down grade areas, base stone should extend through the slope to allow any water entering the base stone a path to exit. Edge drains should be provided where open-graded aggregate base (MDOT 4G) is used.

4.0 CONSTRUCTION CONSIDERATIONS

4.1 Drainage, Groundwater and Related Considerations

Groundwater or perched water was not encountered in the borings performed at either during drilling or upon completion of the drilling operations at both the Smith Middle School or Boulan park Middle School sites. Therefore, difficulty with groundwater seepage or the presence of perched water is not anticipated during general mass grading associated with site and subgrade preparation within the proposed building addition footprints and pavement areas. PSI recommends that the Contractor verify the actual groundwater and seepage conditions at the time of the construction activities and, if necessary, proposes his groundwater control methods for the Engineer's approval, including the disposal of discharge of water.

Water should not be allowed to collect in shallow foundation excavations or other prepared subgrades of the construction area, either during or after construction. Water accumulation should be removed from excavations by pumping from sump pits placed around the perimeter of the excavation.

Every effort should be made to keep the excavations and any other prepared subgrades dry if water is encountered or if rainfall or snowmelt occurs during construction. During wet weather periods, increases in the moisture content of the soil can cause significant reduction in the soil strength and support capabilities. In addition, soils that become wet may be slow to dry and thus significantly retard the progress of grading and compaction activities. It will, therefore, be advantageous to perform earthwork and foundation construction activities during dry weather.

Positive site surface drainage should be provided to reduce infiltration of surface water. The grades should be sloped away from the proposed building structure and surface drainage should be collected and discharged.

4.2 Excavation Safety Considerations

Typically, soils penetrated by augers can be removed with conventional earthmoving equipment (backhoe and/or trencher). However, subsurface excavation equipment varies, and field refusal conditions may vary as well. Therefore, it is possible that difficult excavation conditions may be encountered at the proposed site location between the boring locations. Excavation near any existing structure or utility should be performed with

the utmost of care and under the supervision of the geotechnical engineer's representative. Locations of all underground utilities within the proposed site must be verified by the contractor prior to excavation.

In Federal Register, Volume 54, No. 209 (October 1989), the United States Department of Labor, Occupational Safety and Health Administration (OSHA) amended its "Construction Standards for Excavations, 29 CFR, part 1926, Subpart P". This document was issued to better insure the safety of workmen entering trenches or excavations. It is mandated by this federal regulation that excavations, whether they be utility trenches, basement excavation or footing excavations, be constructed in accordance with the new MIOSHA guidelines. It is our understanding that these regulations are being strictly enforced and if they are not closely followed, the owner and the contractor could be liable for substantial penalties.

The contractor is solely responsible for designing and constructing stable, safe, temporary excavations and should shore, slope or bench the sides of the excavations as required to maintain stability of both the excavation sides and bottom. The contractor's "responsible person", as defined in 29 CFR Part 1926, should evaluate the soil exposed in the excavations as part of the contractor's safety procedures.

The angle of the excavation side slopes should be decided based on the soil type and unconfined compressive strength of the excavated soil per MIOSHA requirements. For Type A soils, such as clay above water table having unconfined compressive strength values equal to or more than 1½ ton per square foot (tsf), the maximum allowable slope for excavations up to 20 feet deep is ¾ (Horizontal) :1 (Vertical). For Type B soils, such as clay above water table having unconfined compressive strength values between ½ to 1½ ton per square foot (tsf), or angular gravel, the maximum allowable slope for excavations up to 20 feet deep is 1 (Horizontal) :1 (Vertical). For Type C soils, such as clay above water table having unconfined compressive strength values less than ½ ton per square foot (tsf), or granular soils such as gravel and sand, and all submerged soils, the maximum allowable slope for excavations up to 20 feet deep is 1½ (Horizontal) :1 (Vertical). The contractor should be aware that slope height, slope inclination, and excavation depth should not exceed the specified local, state, and federal regulations.

All earthwork, subgrade preparation, and foundation construction operations should be conducted in accordance with the project specifications and under the supervision of the geotechnical engineer or his representative. We are providing this information solely as a service to our client. PSI does not assume responsibility for construction site safety or the contractor's or other parties' compliance with local, state, and federal safety or other regulations.

5.0 REPORT LIMITATIONS

The recommendations submitted in this report are based on the available subsurface information obtained by PSI and the project information furnished by Kingscott Associates. If there are any revisions to the plans for this project, or if deviations from the subsurface conditions noted in this report are encountered during construction, PSI should be notified immediately to determine if changes in the earthwork, subgrade preparation and foundation design parameter recommendations are required. If PSI is not notified of such changes, PSI will not be responsible for the impact of those changes on the project.

The geotechnical engineer warrants that the findings, recommendations, specifications, or professional advice contained herein have been made in accordance with generally accepted professional engineering practices in the local area. No other warranties are implied or expressed.

This report has been prepared for the exclusive use of the Troy School District and their authorized representatives. This report is intended for the specific application to the proposed building addition and parking lot expansion projects at the existing Smith Middle School and Boulan Park Middle School, located in the city of Troy, Oakland County, Michigan.

APPENDIX
SECTION NO. 1

TROY SCHOOL DISTRICT 2004 BOND PROGRAM – PHASE III
SMITH MIDDLE SCHOOL AND BOULAN PARK MIDDLE SCHOOL
CITY OF TROY, OAKLAND COUNTY, MICHIGAN

Figure 1
Site Vicinity Map

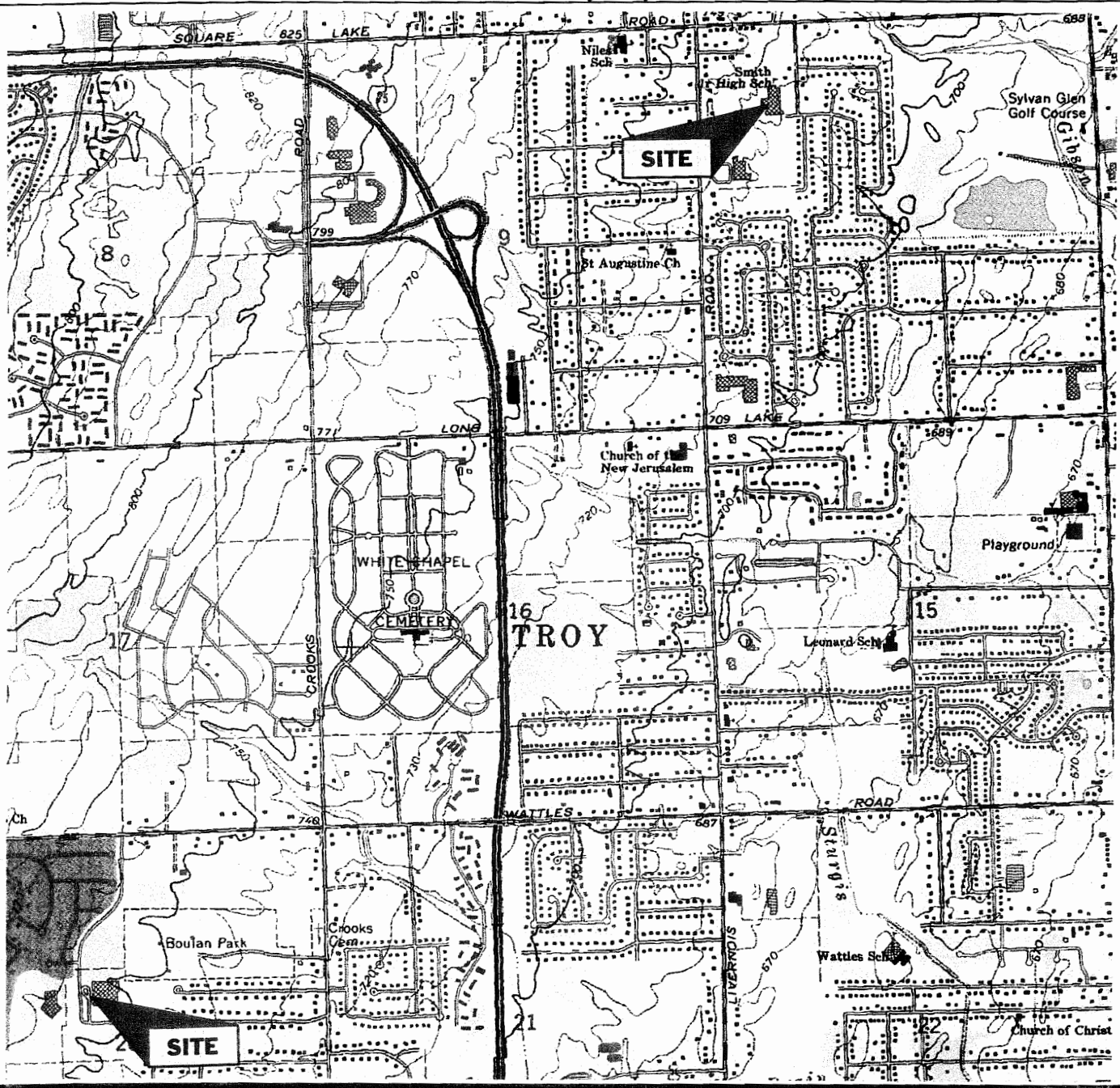

SCALE 1:24,000

1 ½ 0 MILES 1

N

PSI Project No.: 381- 55194

psi Information To Build On
Engineering • Consulting • Testing

Base Map:
Birmingham, MI
Quadrangle 7.5 Minute Series
Topographic Map

Peak Acceleration (%g) with 10% Probability of Exceedance in 50 Years
USGS Map, Oct. 2002

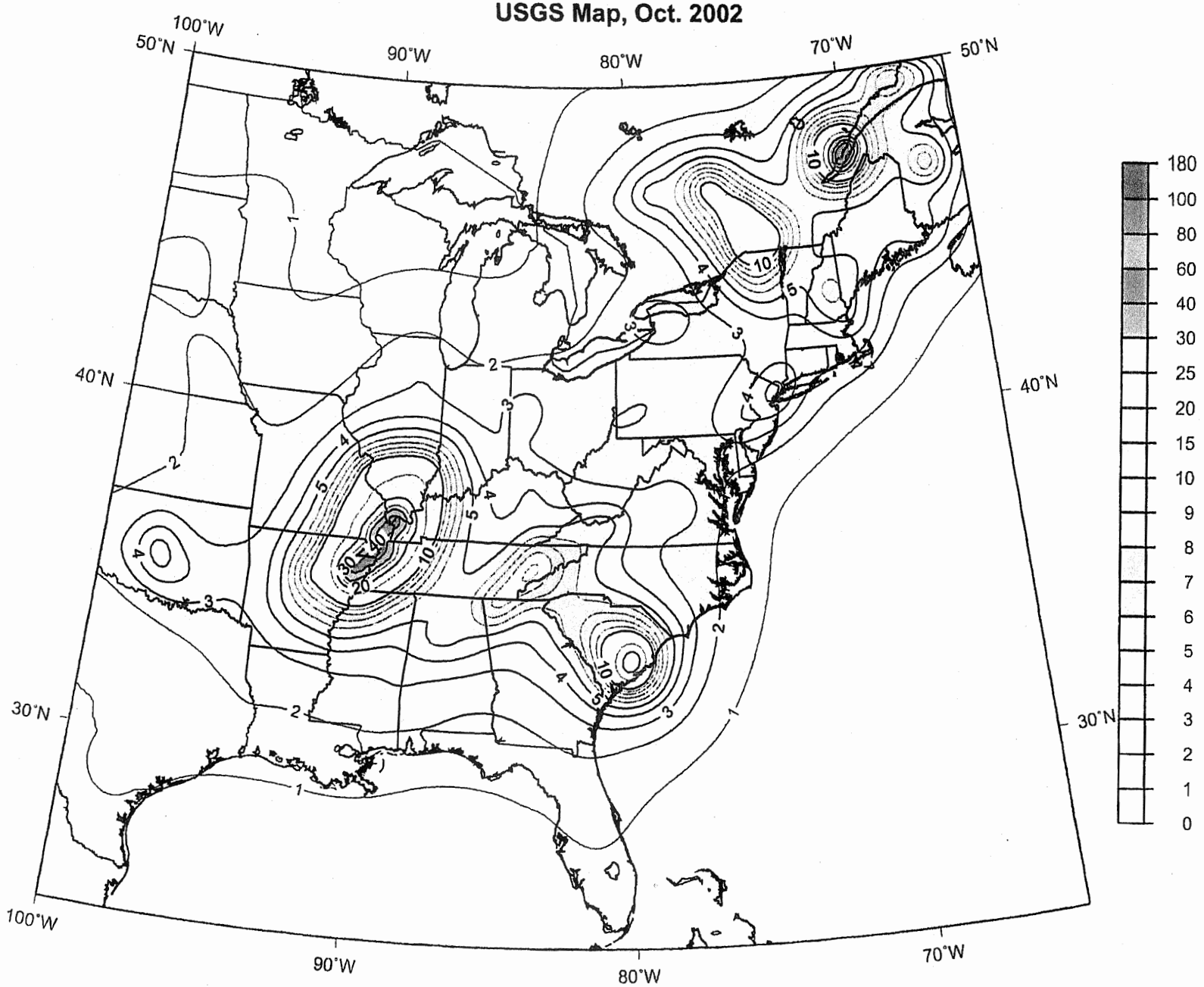

FIGURE NO. 2

Earthquake Hazard Risk Map

Source: http://earthquake.usgs.gov/hazmaps/

TROY SCHOOL DISTRICT 2004 BOND PROGRAM - PHASE III
SMITH MIDDLE SCHOOL, BOULAN PARK MIDDLE SCHOOL
CITY OF TROY, OAKLAND COUNTY, MICHIGAN

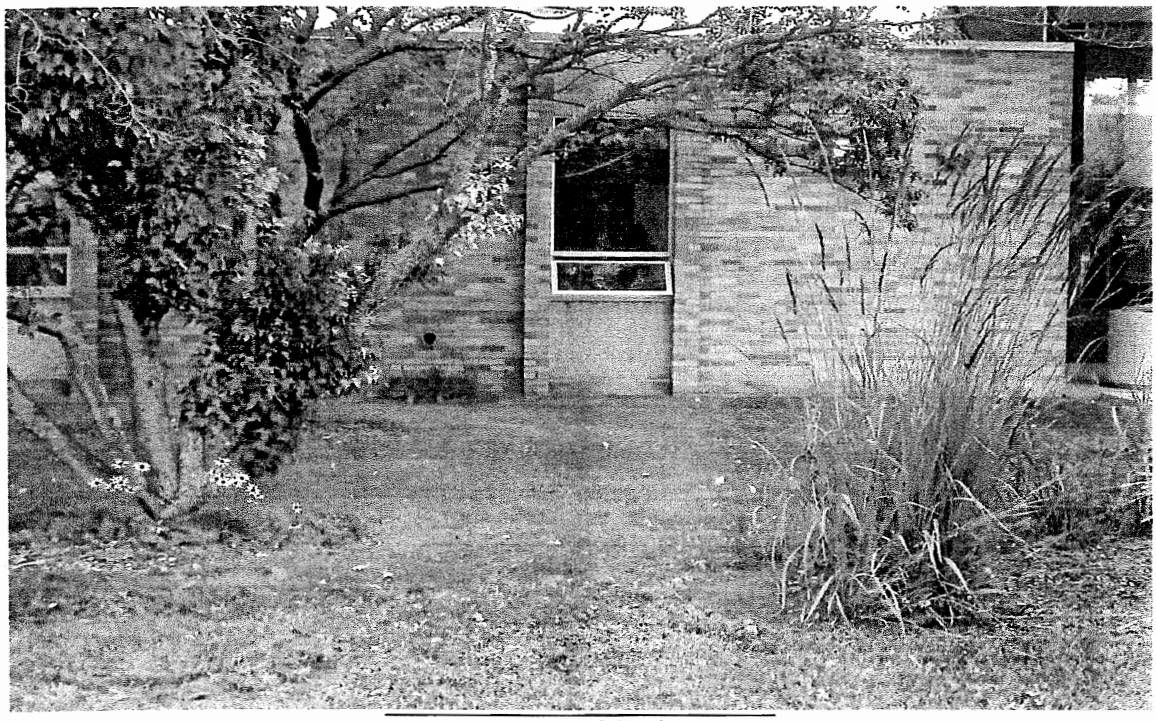

Photograph No. 1
Smith Middle School - B-1 Facing West

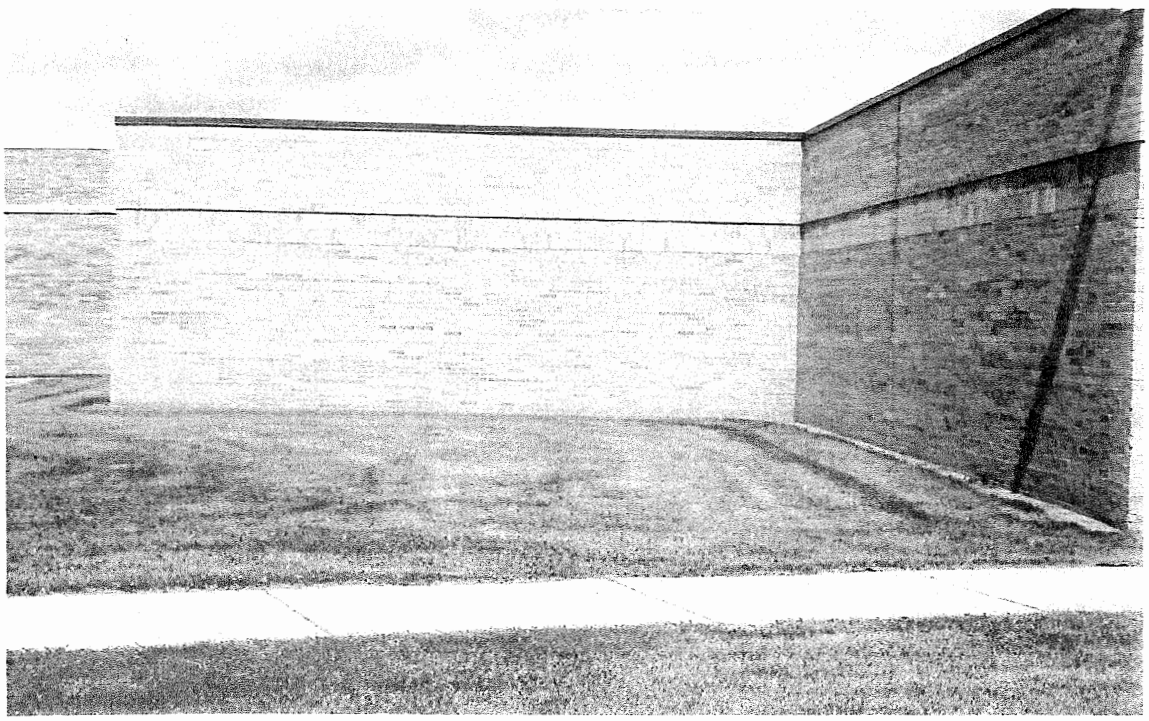

Photograph No. 2
Smith Middle School - B-2 Facing North

TROY SCHOOL DISTRICT 2004 BOND PROGRAM - PHASE III
SMITH MIDDLE SCHOOL, BOULAN PARK MIDDLE SCHOOL
CITY OF TROY, OAKLAND COUNTY, MICHIGAN

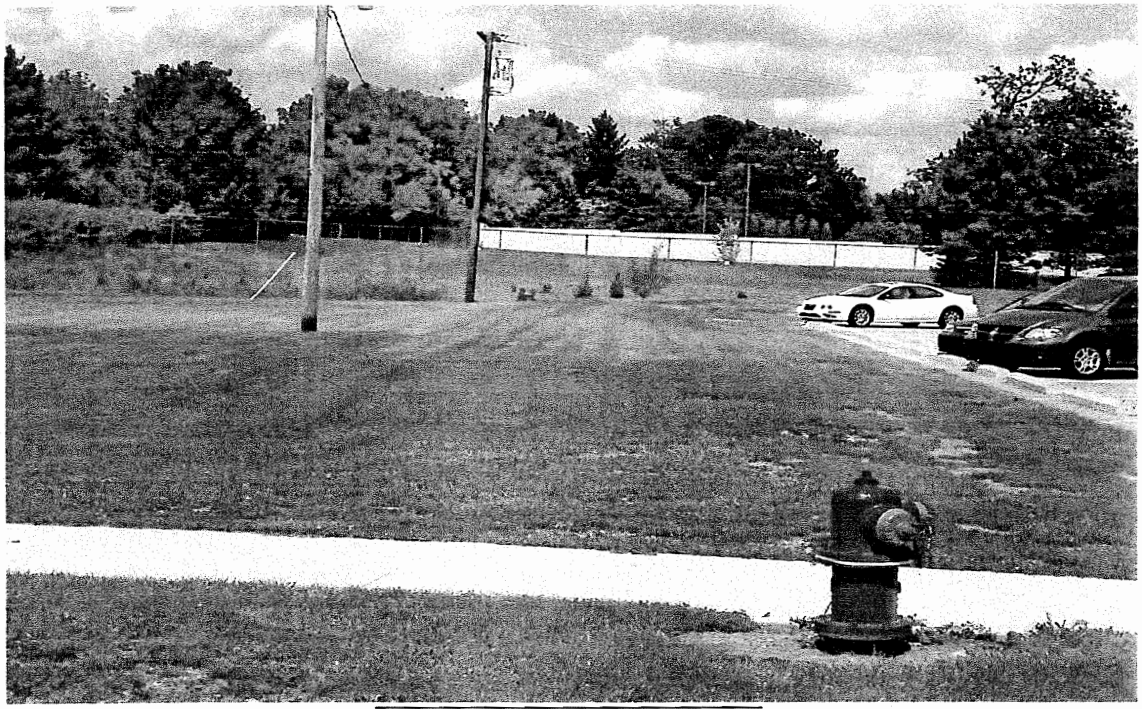

Photograph No. 3
Smith Middle School - B-3 and B-4Facing North

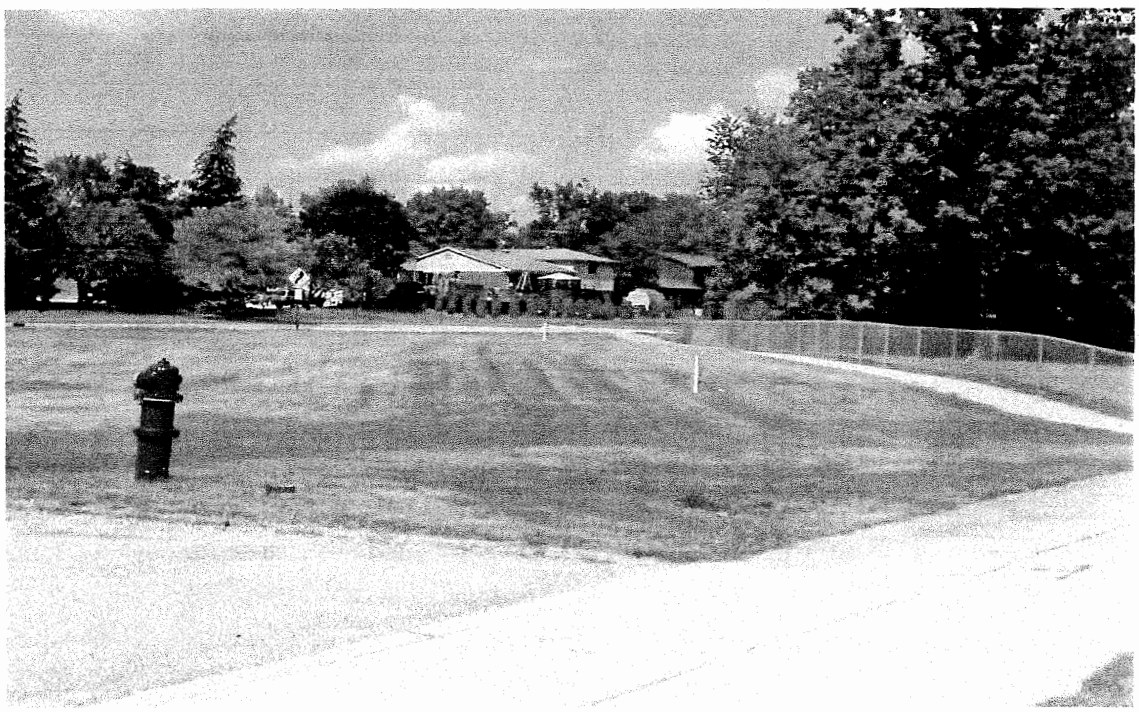

Photograph No. 4
Boulan Park Middle School - B-1 and B-2 Facing North

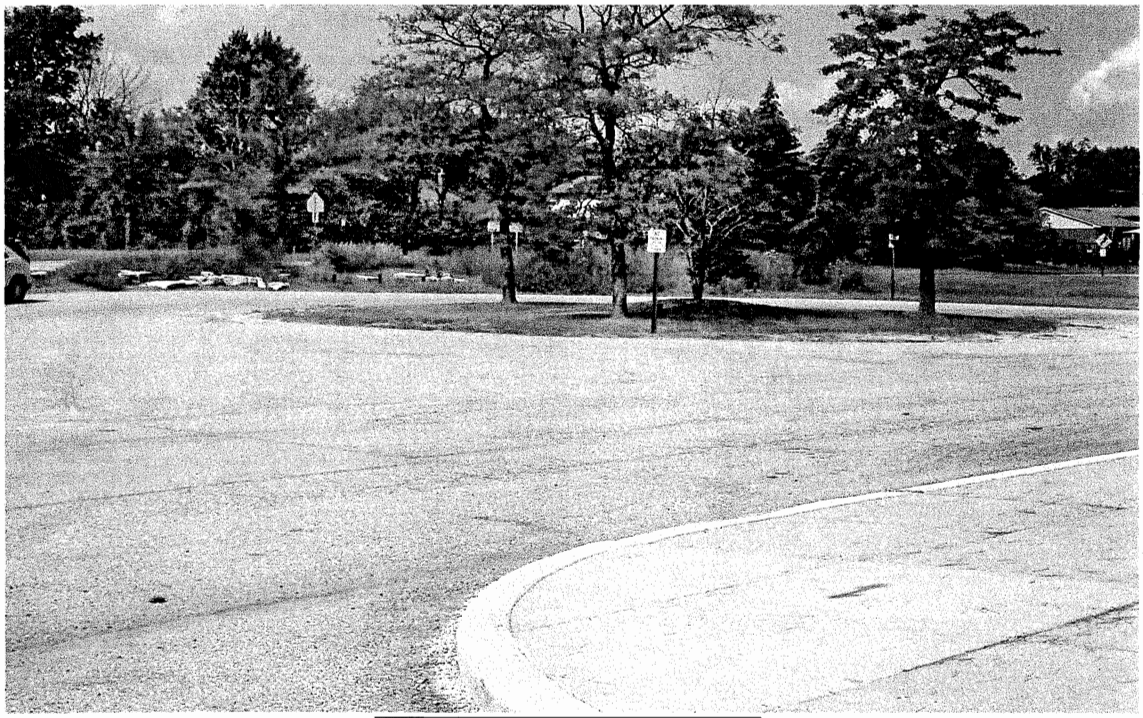

Photograph No. 5
Boulan Park Middle School - B-3 and B-4Facing NorthWest

APPENDIX
SECTION NO. 2
SMITH MIDDLE SCHOOL

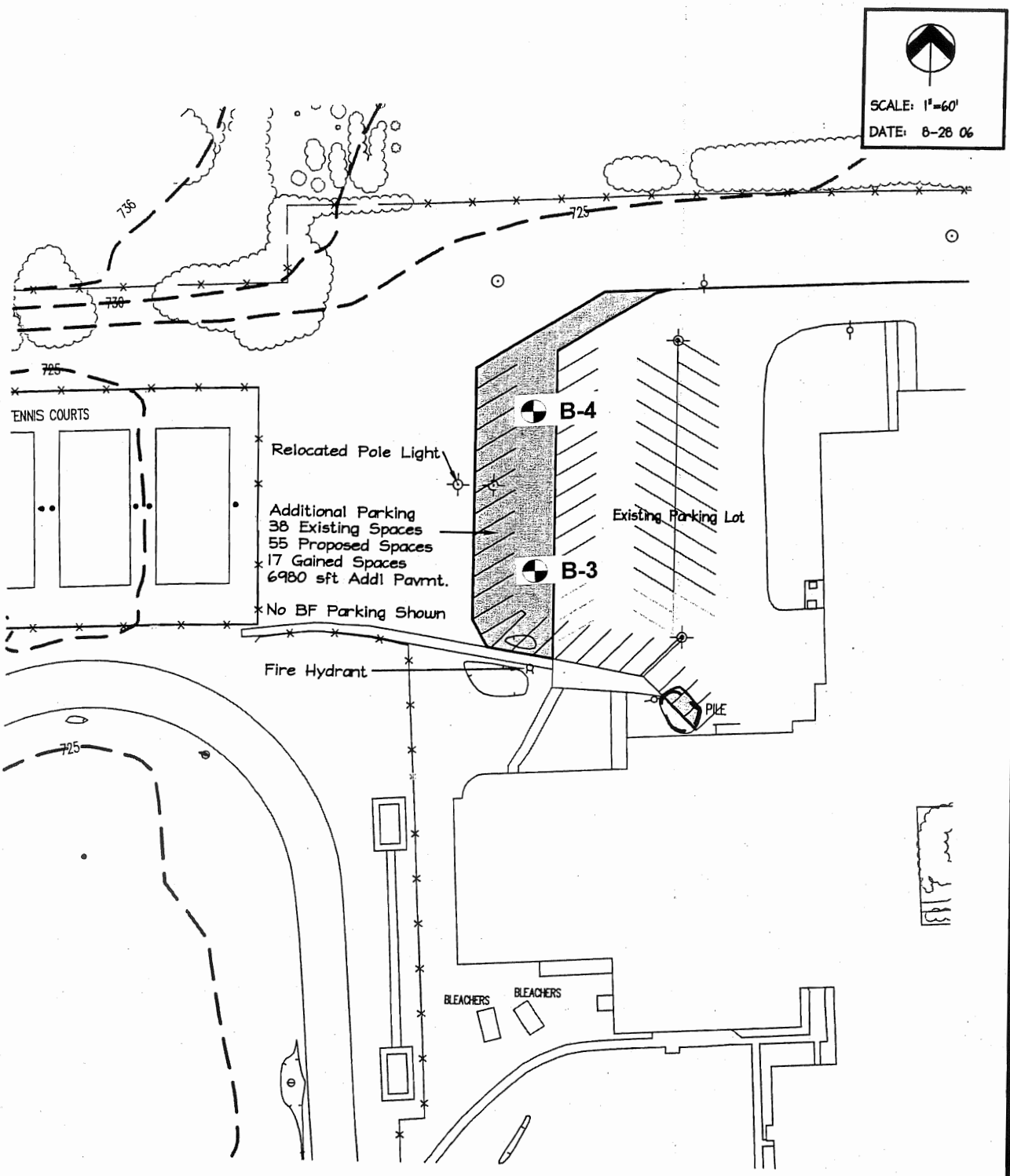

psi Information To Build On Engineering • Consulting • Testing	**Troy School District 2004 Bond Program** **Smith Middle School** **City of Troy, Oakland County, Michigan**			**Boring Location Plan** **Figure No. 3B**
	Scale: NA	Date: 09/18/2006	Drawn By: JDH	PSI Project No.: 381-55194

Client: Troy School District	PSI Project #: 381-55194	Boring Log Number: B-1
	Sheet: 1 of 1	
Project: Building Additions and Parking Lot Expansion - Smith Middle School	Location: City of Troy, Oakland County, Michigan	

Professional Service Industries, Inc.

Sample No./Type	Sample Location	Sample Recovery	Graphical Log	Description of Material	Depth (ft)	Blows Per Foot	Moisture Content (%)	Plastic Limit (%)	Liquid Limit (%)	Dry Unit Wt (lb/cu.ft.)
				Surface Elevation:						
				6" Dark Brown SILTY TOPSOIL						
1SS				FILL - SANDY CLAY, blueish gray, olive and brown, moist		9 (3,4,5)	15			
2SS				FILL - ORGANIC SILT, some sand, dark gray, moist (possible buried topsoil) L.O.I. = 5.9%	5	5 (2,2,3)	25			
3SS				SANDY CLAY (CL) - few gravel, mottled brown and gray, moist, medium stiff to stiff		6 (1,1,5)	13			
4SS				SANDY CLAY (CL) - few gravel, brown, moist, hard	10	17 (7,7,10)	10			
5SS				SANDY CLAY (CL) - few gravel, grayish brown with some rust mottling, moist, hard	15	20 (4,8,12)	13			
6SS				SILTY CLAY (CL) - with sand, few gravel, gray, moist, very stiff	20	10 (3,4,6)	13			126
				END OF BORING						

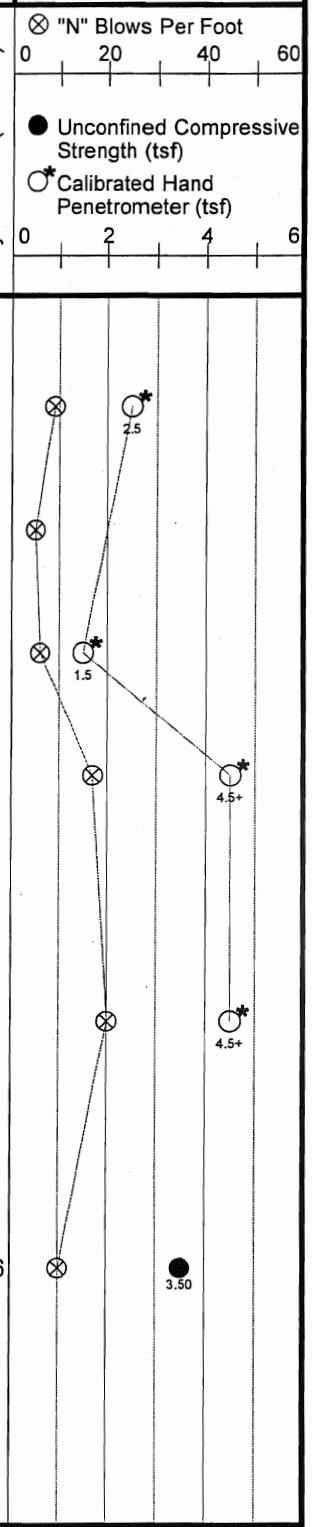

Note: The stratification lines indicated here are approximate. In-situ, the transition between soil types may be gradual.

▽ Water Level While Drilling None	Boring Started: 9/11/2006 Completed: 9/11/2006		Engineer: JDH
▼ Water Level At Completion None	Drilling Method: 3.25" HSA	Office: Plymouth	Drawn By: JDH
After Completion	Driller: P. Cody	Drill Rig: CME-75	Hole Depth (ft): 20.5	Approved:
	Note: Boring backfilled with soil unless otherwise noted.		

Client: Troy School District	PSI Project #: 381-55194	Boring Log Number: B-2
	Sheet: 1 of 1	
Project: Building Additions and Parking Lot Expansion - Smith Middle School	Location: City of Troy, Oakland County, Michigan	

Professional Service Industries, Inc.

Surface Elevation:

Sample No./Type	Sample Location	Sample Recovery	Graphical Log	Description of Material	Depth (ft)	Blows Per Foot	Moisture Content (%)	Plastic Limit (%)	Liquid Limit (%)	Dry Unit Wt (lb/cu.ft.)
				4" Dark Brown SILTY TOPSOIL						
1SS				FILL - SAND, fine to medium, light brown, moist		15 (4,6,9)	14			
2SS				FILL - ORGANIC SILTY SAND, dark gray, with seams of dark gray and blueish gray sandy clay, some brown clayey sand, moist L.O.I. = 5.2%	5	10 (4,5,5)	11			
3SS				SANDY CLAY (CL) - few gravel, mottled brown and gray, moist, hard		17 (4,7,10)	12			
4SS				SANDY CLAY (CL) - few gravel, brown, moist, hard	10	22 (5,10,12)	11			129
5SS				SANDY CLAY (CL) - few gravel, grayish brown with some rust mottling, moist, hard	15	31 (8,12,19)	11			
6SS				SILTY CLAY (CL) - with sand, few gravel, gray, moist, very stiff	20	14 (4,5,9)	12			
				END OF BORING						

"N" Blows Per Foot: 0 20 40 60

Unconfined Compressive Strength (tsf)

Calibrated Hand Penetrometer (tsf): 0 2 4 6

4.5+ 4.5+ 4.5+ 4.0 1054

Note: The stratification lines indicated here are approximate. In-situ, the transition between soil types may be gradual.

▽ Water Level While Drilling None

▼ Water Level At Completion None

_____ After Completion

Boring Started: 9/11/2006	Completed: 9/11/2006		Engineer: JDH
Drilling Method: 3.25" HSA		Office: Plymouth	Drawn By: JDH
Driller: P. Cody	Drill Rig: CME-75	Hole Depth (ft): 20.5	Approved:

Note: Boring backfilled with soil unless otherwise noted.

Client: Troy School District	PSI Project #: 381-55194	Boring Log Number: B-3
	Sheet: 1 of 1	
Project: Building Additions and Parking Lot Expansion - Smith Middle School	Location: City of Troy, Oakland County, Michigan	

Professional Service Industries, Inc.

Sample No./Type	Sample Location	Sample Recovery	Graphical Log	Description of Material	Depth (ft)	Blows Per Foot	Moisture Content (%)	Plastic Limit (%)	Liquid Limit (%)	Dry Unit Wt (lb/cu.ft.)
				Surface Elevation:						
				4" Dark Brown SILTY TOPSOIL						
1SS				FILL - SANDY CLAY, mottled brown, trace dark brown silty organics, moist		14 (4,7,7)	10			
				SANDY CLAY (CL) - few gravel, mottled brown and gray, moist, hard	5					
2SS						14 (6,5,9)	13			
				END OF BORING						

"N" Blows Per Foot: 0 20 40 60

Unconfined Compressive Strength (tsf)

Calibrated Hand Penetrometer (tsf): 0 2 4 6

4.5+ 4.5+

Note: The stratification lines indicated here are approximate. In-situ, the transition between soil types may be gradual.

Water Level While Drilling None

Water Level At Completion None

After Completion

Boring Started: 9/11/2006	Completed: 9/11/2006		Engineer: JDH
Drilling Method: 3.25" HSA		Office: Plymouth	Drawn By: JDH
Driller: P. Cody	Drill Rig: CME-75	Hole Depth (ft): 5.5	Approved:
Note: Boring backfilled with soil unless otherwise noted.			

Client: Troy School District	PSI Project #: 381-55194	Boring Log Number: B-4
	Sheet: 1 of 1	
Project: Building Additions and Parking Lot Expansion - Smith Middle School	Location: City of Troy, Oakland County, Michigan	Professional Service Industries, Inc.

Sample No./Type	Sample Location	Sample Recovery	Graphical Log	Description of Material	Depth (ft)	Blows Per Foot	Moisture Content (%)	Plastic Limit (%)	Liquid Limit (%)	Dry Unit Wt (lb/cu.ft.)
				Surface Elevation:						
				5" Dark Brown SILTY TOPSOIL						
				FILL - SANDY CLAY, mottled brown, trace dark brown silty organics, moist						
1SS				SANDY CLAY (CL) - few root hairs and silt partings, mottled brown and gray, moist, hard		21 (4,9,12)	9			
2SS				SANDY CLAY (CL) - few gravel, brown, moist, hard	5	19 (5,9,10)	12			
				END OF BORING						

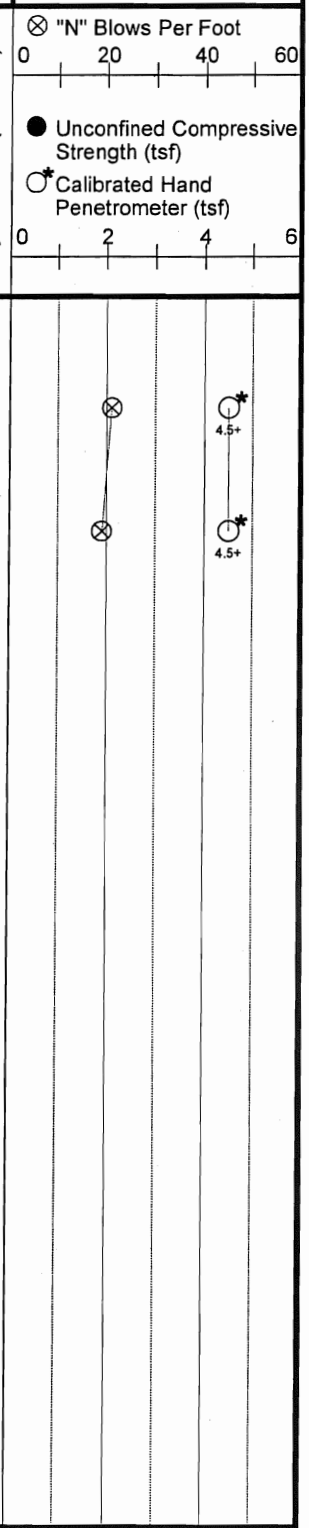

Note: The stratification lines indicated here are approximate. In-situ, the transition between soil types may be gradual.

▽ Water Level While Drilling None	Boring Started: 9/11/2006	Completed: 9/11/2006		Engineer: JDH
▼ Water Level At Completion None	Drilling Method: 3.25" HSA		Office: Plymouth	Drawn By: JDH
After Completion	Driller: P. Cody	Drill Rig: CME-75	Hole Depth (ft): 5.5	Approved:
	Note: Boring backfilled with soil unless otherwise noted.			

UNCONFINED COMPRESSIVE STRENGTH

Project Name:	Smith Middle School Addiitons
Location:	City of Troy, Oakland County, Michigan
Project No.:	381-45102
Source:	B-1 6SS **Sample Depth:** 19.0 - 20.5 feet
Description:	SILTY CLAY (CL) - with sand, few gravel, gray
Qp (tsf):	2.75
Wet Weight (gm):	168.63
Date Tested:	9/19/2006
Tested By:	ZS

Height:	2.931	inches	74.44	mm	
Diameter:	1.402	inches	35.61	mm	
Moisture Content:	13%		**Saturation (%):**		
Ht.-Diameter Ratio:	2.09		**Specific Gravity:**		
Dry Density:	126	pcf			

READING NUMBER	DEFORM. (in.)	LOAD (lbs)	STRAIN (%)	CORRECTED AREA (in^2)	AXIAL STRESS (tsf)
0	0.000	0.0	0.00	1.543	0.00
1	0.029	8.5	0.99	1.559	0.39
2	0.058	17.9	1.99	1.575	0.82
3	0.087	26.7	2.99	1.591	1.21
4	0.116	32.7	3.97	1.607	1.47
5	0.146	38.2	4.97	1.624	1.69
6	0.175	43.5	5.97	1.641	1.91
7	0.204	49.0	6.97	1.659	2.12
8	0.233	54.4	7.97	1.677	2.33
9	0.263	61.1	8.97	1.695	2.59
10	0.292	66.0	9.95	1.714	2.77
11	0.321	69.4	10.95	1.733	2.89
12	0.350	74.8	11.95	1.753	3.07
13	0.380	78.9	12.95	1.773	3.20
14	0.409	82.6	13.95	1.793	3.32
15	0.438	88.1	14.95	1.815	3.50
16	0.467	91.5	15.95	1.836	3.59
17	0.496	94.2	16.93	1.858	3.65
18	0.525	97.4	17.93	1.880	3.73
19	0.555	100.7	18.93	1.904	3.81
20	0.584	103.3	19.93	1.927	3.86
Qu =	3.50	tsf	334.71	kPa, Strain	14.95%

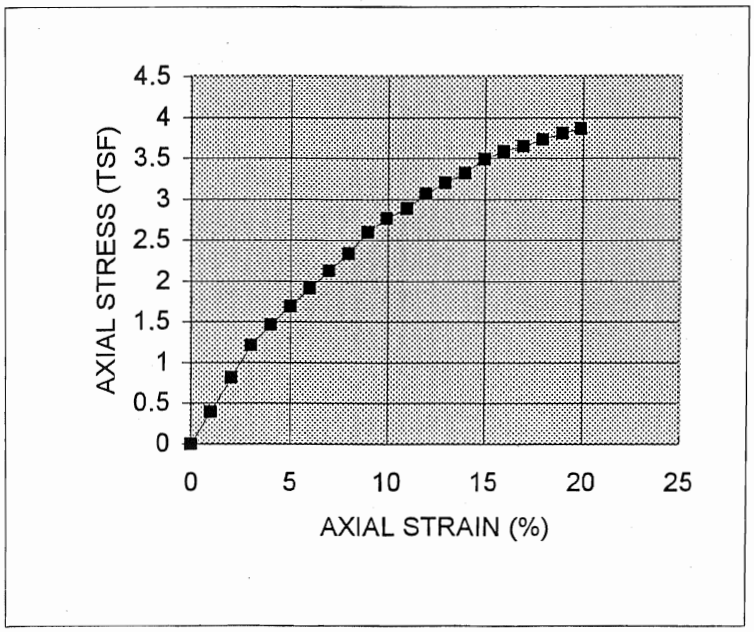

Failure Sketch

psi

UNCONFINED COMPRESSIVE STRENGTH

Project Name: Smith Middle School Additions
Location: City of Troy, Oakland County, Michigan
Project No.: 381-45102
Source: B-2 4SS **Sample Depth:** 9.0 - 10.5 feet
Description: SANDY CLAY (CL) - few gravel, brown
Qp (tsf): 4.5+
Wet Weight (gm): 167.02
Date Tested: 9/19/2006
Tested By: ZS

Height:	2.896 inches	73.56 mm	
Diameter:	1.397 inches	35.49 mm	
Moisture Content:	11%	**Saturation (%):**	
Ht.-Diameter Ratio:	2.07	**Specific Gravity:**	
Dry Density:	129 pcf		

READING NUMBER	DEFORM. (in.)	LOAD (lbs)	STRAIN (%)	CORRECTED AREA (in^2)	AXIAL STRESS (tsf)
0	0.000	0.0	0.00	1.533	0.00
1	0.029	33.4	0.99	1.549	1.55
2	0.058	71.9	1.99	1.564	3.31
3	0.086	94.5	2.98	1.580	4.31
4	0.115	116.9	3.98	1.597	5.27
5	0.144	140.7	4.98	1.614	6.28
6	0.173	165.3	5.96	1.630	7.30
7	0.202	190.6	6.96	1.648	8.33
8	0.231	213.6	7.96	1.666	9.23
9	0.260	231.7	8.97	1.684	9.90
10	0.288	246.5	9.95	1.703	10.42
11	0.317	252.1	10.95	1.722	10.54
12	0.346	228.4	11.95	1.741	9.44
13	0.375	180.0	12.95	1.761	7.36
14	0.404	140.4	13.95	1.782	5.67
15	0.433	126.4	14.94	1.802	5.05
16	0.462	112.9	15.94	1.824	4.46
17	0.490	116.2	16.94	1.846	4.53
18	0.519	119.3	17.93	1.868	4.60
19	0.548	116.5	18.93	1.891	4.44
20	0.577	110.5	19.93	1.915	4.15

Qu = 10.54 tsf 1009.68 kPa, Strain 10.95%

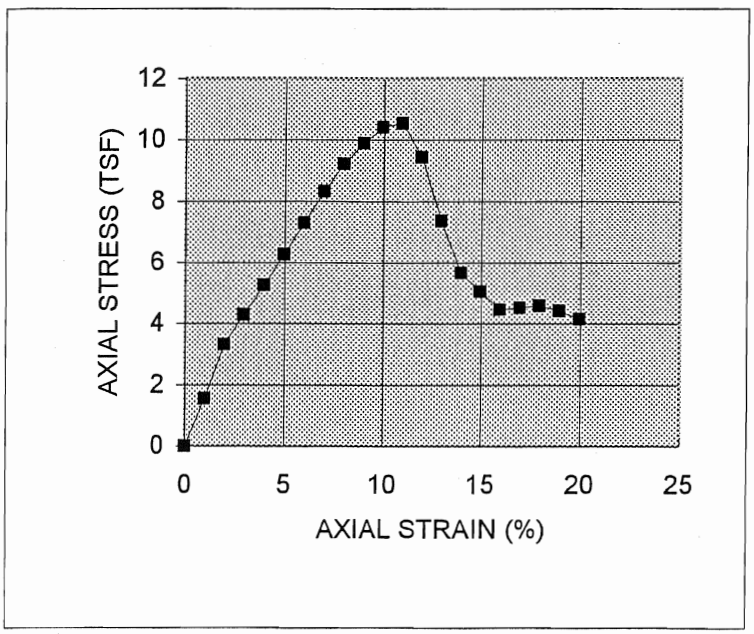

Failure Sketch

APPENDIX
SECTION NO. 3
BOULAN PARK MIDDLE SCHOOL

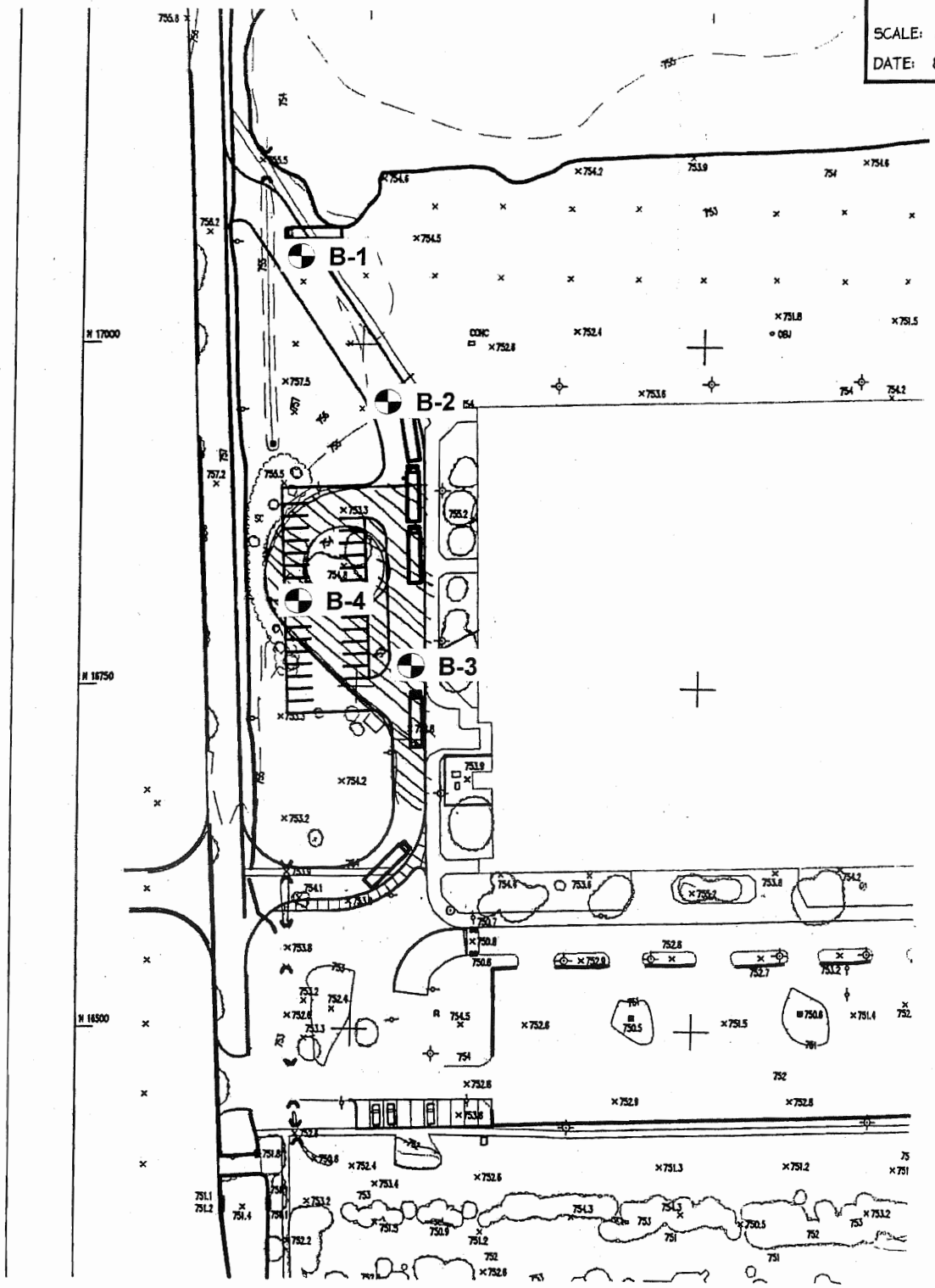

psi Information To Build On Engineering • Consulting • Testing	**Troy School District 2004 Bond Program Boulan Park Middle School City of Troy, Oakland County, Michigan**			**Boring Location Plan Figure No. 3C**
	Scale: NA	Date: 09/18/2006	Drawn By: JDH	PSI Project No.: 381-55194

Client: Troy School District	PSI Project #: 381-55194	Boring Log Number: B-1	psi
	Sheet: 1 of 1		Professional Service Industries, Inc.
Project: Parking Lot and Driveway Expansion - Boulan Park Middle School	Location: City of Troy, Oakland County, Michigan		

Surface Elevation: **756.0**

Sample No./Type	Elevation (ft)	Description of Material	Depth (ft)	Blows Per Foot	Moisture Content (%)	Plastic Limit (%)	Liquid Limit (%)	Dry Unit Wt (lb/cu.ft.)
	755.7	4" Dark Brown SILTY TOPSOIL						
		FILL - SANDY CLAY, few gravel and organics, mottled brown, moist						
	754.5	SANDY CLAY (CL) - few gravel, mottled brown, moist, hard						
1SS				16 (5,7,9)	9			
2SS			5	23 (9,10,13)	9			
	750.5	END OF BORING						

⊗ "N" Blows Per Foot (0, 20, 40, 60)

○ Unconfined Compressive Strength (tsf)

○* Calibrated Hand Penetrometer (tsf) (0, 2, 4, 6)

1SS: 4.5+

2SS: 4.5+

Note: The stratification lines indicated here are approximate. In-situ, the transition between soil types may be gradual.

▽ Water Level While Drilling None

▼ Water Level At Completion None

_____ After Completion

Boring Started: **9/11/2006** Completed: **9/11/2006**			Engineer: **JDH**
Drilling Method: **3.25" HSA**		Office: **Plymouth**	Drawn By: **JDH**
Driller: **P. Cody**	Drill Rig: **CME-75**	Hole Depth (ft): **5.5**	Approved:
Note: Boring backfilled with soil unless otherwise noted.			

Client: Troy School District	PSI Project #: 381-55194	Boring Log Number: B-2	Professional Service Industries, Inc.
	Sheet: 1 of 1		
Project: Parking Lot and Driveway Expansion - Boulan Park Middle School	Location: City of Troy, Oakland County, Michigan		

Sample No./Type	Sample Location	Sample Recovery	Graphical Log	Elevation (ft)	Description of Material	Depth (ft)	Blows Per Foot	Moisture Content (%)	Plastic Limit (%)	Liquid Limit (%)	Dry Unit Wt (lb/cu.ft.)	⊗ "N" Blows Per Foot 0 20 40 60; ○ Unconfined Compressive Strength (tsf); ○* Calibrated Hand Penetrometer (tsf) 0 2 4 6
					Surface Elevation: **755.0**							
				754.7	4" Dark Brown SILTY TOPSOIL							
1SS					FILL - SANDY CLAY, mottled brown and gray, few gravel and seams of dark gray silty organics, moist		12 (4,6,6)	12				⊗
				752.0	SILTY, CLAYEY SAND (SC) - few gravel, brown, moist, loose							
2SS						5	9 (3,4,5)	12				⊗
				749.5	END OF BORING							

Note: The stratification lines indicated here are approximate. In-situ, the transition between soil types may be gradual.

▽ Water Level While Drilling None

▼ Water Level At Completion None

_____ After Completion

Boring Started: **9/11/2006**	Completed: **9/11/2006**		Engineer: **JDH**
Drilling Method: **3.25" HSA**		Office: **Plymouth**	Drawn By: **JDH**
Driller: **P. Cody**	Drill Rig: **CME-75**	Hole Depth (ft): **5.5**	Approved: NDK
Note: Boring backfilled with soil unless otherwise noted.			

Client: Troy School District	PSI Project #: 381-55194	Boring Log Number: B-3
	Sheet: 1 of 1	
Project: Parking Lot and Driveway Expansion - Boulan Park Middle School	Location: City of Troy, Oakland County, Michigan	

Professional Service Industries, Inc.

Sample No./Type	Sample Location	Sample Recovery	Graphical Log	Elevation (ft)	Description of Material	Depth (ft)	Blows Per Foot	Moisture Content (%)	Plastic Limit (%)	Liquid Limit (%)	Dry Unit Wt (lb/cu.ft.)
					Surface Elevation: **753.5**						
				753.3	3" ASPHALT PAVEMENT						
					8" SAND AND GRAVEL BASE COURSE, dark brown to black						
				752.5	SILTY, CLAYEY SAND (SC) - few gravel, brown, moist, medium dense						
1SS							12	12			
				751.0	SANDY CLAY (CL) - few gravel, mottled brown and gray, moist, hard		3,4,8				
2SS						5	13	13			
				748.0			3,5,8				
					END OF BORING						

"N" Blows Per Foot: 0 20 40 60

Unconfined Compressive Strength (tsf)

Calibrated Hand Penetrometer (tsf): 0 2 4 6

1SS: 4.5+ 2SS: 4.5+

Note: The stratification lines indicated here are approximate. In-situ, the transition between soil types may be gradual.

Water Level While Drilling None

Water Level At Completion None

After Completion

Boring Started: 9/11/2006	Completed: 9/11/2006		Engineer: JDH
Drilling Method: 3.25" HSA		Office: Plymouth	Drawn By: JDH
Driller: P. Cody	Drill Rig: CME-75	Hole Depth (ft): 5.5	Approved:

Note: Boring backfilled with soil unless otherwise noted.

SAMPLE IDENTIFICATION

The Unified Soil Classification System is used to identify the soil unless otherwise noted.

SOIL PROPERTY SYMBOLS

N:	Standard Penetration Resistance "N": Blows per foot of a 140-pound hammer falling 30 inches on a 2 inch O.D. split-spoon
Qu:	Unconfined Compressive Strength, TSF
Qp:	Pocket penetrometer value, unconfined compressive strength, TSF
Mc:	Water Content, %
LL:	Liquid Limit, %
PI:	Plasticity Index, %
γd:	Dry Density, PCF
▼:	Observed groundwater level at time noted after completion of boring

DRILLING AND SAMPLING SYMBOLS

SS:	Split-Spoon – 1 3/8" I.D., 2" O.D., except where noted
ST:	Shelby Tube – 3" O.D., except where noted
AU:	Auger Sample
DB:	Diamond Bit
CB:	Carbide Bit
WS:	Washed Sample

RELATIVE DENSITY AND CONSISTENCY CLASSIFICATIONS

NON-COHESIVE SOILS	RELATIVE DENSITY, %	SPT, N BLOWS PER FOOT
Very Loose	0 – 15	0 – 4
Loose	15 – 35	4 – 10
Medium	35 – 65	10 – 30
Dense	65 – 85	30 – 50
Very Dense	85 – 100	Over 50

COHESIVE SOILS	Qu – (TSF)	SPT, N BLOWS PER FOOT
Very Soft	0 – 0.25	0 – 2
Soft	0.25 – 0.50	2 – 4
Medium Stiff	0.50 – 1.00	4 – 8
Stiff	1.00 – 2.00	8 – 15
Very Stiff	2.00 – 4.00	15 – 30
Hard	Over 4.00	Over 30

PARTICLE SIZES

Boulders		Over 12 in. (305 mm)
Cobbles		3 in. (76 mm) – 12 in. (305 mm)
Gravel –	Coarse	3/4 in. (19 mm) – 3 in. (76 mm)
	Fine	0.19 in. (4.75 mm) – 3/4 in. (19 mm)
Fines –	Silt	0.0002 in. (0.005 mm) – 0.0029 in. (0.075 mm)
	Clay	Less than 0.0002 in. (0.005 mm)
Sand –	Coarse	0.079 in. (2 mm) – 0.19 in. (4.75 mm)
	Medium	0.017 in. (0.425 mm) – 0.079 in. (2mm)
	Fine	0.0029 in. (0.075 mm) – 0.017 in. (0.425 mm)

SOIL CONSTITUENTS

Trace	Less than 5%
Few (Gravel & Cobbles)	Less than 5%
Some	5 – 12%
With	12 – 30%

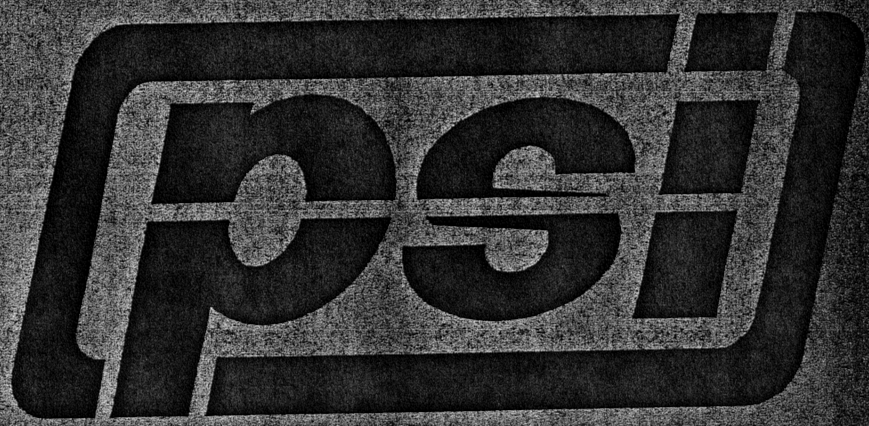
psi

SECTION 02630
STORM DRAINAGE

PART 1 - GENERAL

1.1 RELATED DOCUMENTS

A. Drawings and general provisions of the Contract, including General and Supplementary Conditions and Division 01 Specification Sections, apply to this Section.

1.2 SUMMARY

A. This Section includes gravity-flow, nonpressure storm drainage outside the building, with the following components:
   1. Storm Sewer Piping.
   2. Precast concrete manholes.

1.3 DEFINITIONS

A. PE: Polyethylene plastic.

B. PP: Polypropylene plastic.

C. PVC: Polyvinyl chloride plastic.

1.4 SUBMITTALS

A. Product Data: For the following:
   1. Storm Sewer Pipes.
   2. Storm structures.

B. Shop Drawings: For the following:
   1. Catch Basins. Include plans, elevations, sections, details, and frames, covers, and grates.

1.5 DELIVERY, STORAGE, AND HANDLING

A. Do not store plastic manholes, pipe, and fittings in direct sunlight.

B. Protect pipe, pipe fittings, and seals from dirt and damage.

C. Handle catch basins according to manufacturer's written rigging instructions.

1.6 PROJECT CONDITIONS

A. Interruption of Existing Storm Drainage Service: Do not interrupt service to facilities occupied by Owner or others unless permitted under the following conditions and then only after arranging to provide temporary service according to requirements indicated:

1. Notify Construction Manager no fewer than two days in advance of proposed interruption of service.

PART 2 - PRODUCTS

2.1 PIPING MATERIALS

A. Refer to Part 3 "Piping Applications" Article for applications of pipe, fitting, and joining materials.

2.2 PE PIPE AND FITTINGS

A. Corrugated PE Drainage Pipe and Fittings NPS 10 (DN 250) and Smaller: AASHTO M 252M, Type S, with smooth waterway for coupling joints.
1. Corrugated PE Pipe and Fittings NPS 12 to NPS 48 (DN 250 to DN 1200): AASHTO M 294M, Type S, with smooth waterway for coupling joints.
2. Soiltight Couplings: AASHTO M 294M, corrugated, matching pipe and fittings.

2.3 NONPRESSURE-TYPE PIPE COUPLINGS

A. Comply with ASTM C 1173, elastomeric, sleeve-type, reducing or transition coupling, for joining underground nonpressure piping. Include ends of same sizes as piping to be joined, and corrosion-resistant-metal tension band and tightening mechanism on each end.

B. Sleeve Materials:

1. For Concrete Pipes: ASTM C 443 (ASTM C 443M), rubber.
2. For Plastic Pipes: ASTM F 477, elastomeric seal or ASTM D 5926, PVC.
3. For Dissimilar Pipes: ASTM D 5926, PVC or other material compatible with pipe materials being joined.

C. Unshielded Flexible Couplings: Elastomeric sleeve with stainless-steel shear ring and corrosion-resistant-metal tension band and tightening mechanism on each end.

1. Manufacturers:
a. Fernco Inc.

2.4 CATCH BASINS

A. Standard Precast Concrete Catch Basins: ASTM C 478 (ASTM C 478M), precast, reinforced concrete, of depth indicated, with provision for sealant joints.

1. Base Section: 6-inch (150-mm) minimum thickness for floor slab and 4-inch (102-mm) minimum thickness for walls and base riser section, and having separate base slab or base section with integral floor.
2. Riser Sections: 4-inch (102-mm) minimum thickness, 48-inch (1220-mm) diameter, and lengths to provide depth indicated.
3. Top Section: Eccentric-cone type unless concentric-cone or flat-slab-top type is indicated. Top of cone of size that matches grade rings.
4. Adjusting Rings: Interlocking rings with level or sloped edge in thickness and shape matching catch basin frame and grate. Include sealant recommended by ring manufacturer.
5. Grade Rings: Include 2 or 3 reinforced-concrete rings, of 6- to 9-inch (150- to 229-mm) total thickness, that match 24-inch- (610-mm-) diameter frame and grate.
6. Pipe Connectors: ASTM C 923 (ASTM C 923M), resilient, of size required, for each pipe connecting to base section.

B. Frames and Grates: ASTM A 536, Grade 60-40-18, ductile iron designed for A-16, structural loading. Include flat grate with small square or short-slotted drainage openings.

2.5 PIPE OUTLETS

A. Riprap Basins: Native washed field stone; 9 inches minimum dimension.

PART 3 - EXECUTION

3.1 EARTHWORK

A. Excavation, trenching, and backfilling are specified in Division 31 Section "Earth Moving."

3.2 PIPING INSTALLATION

A. General Locations and Arrangements: Drawing plans and details indicate general location and arrangement of underground storm drainage piping. Location and arrangement of piping layout take design considerations into account. Install piping as indicated, to extent practical. Where specific installation is not indicated, follow piping manufacturer's written instructions.

B. Install piping beginning at low point, true to grades and alignment indicated with unbroken continuity of invert. Place bell ends of piping facing upstream. Install gaskets, seals, sleeves, and couplings according to manufacturer's written instructions for use of lubricants, cements, and other installation requirements.

C. Install proper size increasers, reducers, and couplings where different sizes or materials of pipes and fittings are connected. Reducing size of piping in direction of flow is prohibited.

D. Install gravity-flow, nonpressure drainage piping according to the following:

1. Install piping pitched down in direction of flow, a percent, as indicated.
2. Install PE corrugated sewer piping according to CPPA's "Recommended Installation Practices for Corrugated Polyethylene Pipe and Fittings."

3.3 PIPE JOINT CONSTRUCTION

A. Basic pipe joint construction is specified in Division 33 Section "Common Work Results for Utilities." Where specific joint construction is not indicated, follow piping manufacturer's written instructions.

B. Join gravity-flow, nonpressure drainage piping according to the following:
1. Join corrugated steel sewer piping according to ASTM A 798/A 798M.
2. Join corrugated PE piping according to CPPA 100 and the following:
   a. Use soiltight couplings for Type 2, soiltight joints.

3.4 CATCH BASIN INSTALLATION

A. Construct catch basins to sizes and shapes indicated.

B. Set frames and grates to elevations indicated.

3.5 STORMWATER INLET AND OUTLET INSTALLATION

A. Construct riprap of broken stone, as indicated.

B. Install outlets that spill onto grade, with flared end sections that match pipe, where indicated.

C. Construct energy dissipaters at outlets, as indicated.

3.6 IDENTIFICATION

A. Materials and their installation are specified in Division 31 Section "Earth Moving." Arrange for installation of green warning tape directly over piping and at outside edge of underground structures.
1. Use detectable warning tape over nonferrous piping and over edges of underground structures.

3.7 FIELD QUALITY CONTROL

A. Inspect interior of piping to determine whether line displacement or other damage has occurred. Inspect after approximately 24 inches (610 mm) of backfill is in place, and again at completion of Project.

1. Submit separate reports for each system inspection.
2. Defects requiring correction include the following:

a. Alignment: Less than full diameter of inside of pipe is visible between structures.
b. Deflection: Flexible piping with deflection that prevents passage of ball or cylinder of size not less than 92.5 percent of piping diameter.
c. Crushed, broken, cracked, or otherwise damaged piping.
d. Infiltration: Water leakage into piping.
e. Exfiltration: Water leakage from or around piping.

3. Replace defective piping using new materials, and repeat inspections until defects are within allowances specified.
4. Reinspect and repeat procedure until results are satisfactory.

B. Test new piping systems, and parts of existing systems that have been altered, extended, or repaired, for leaks and defects.

1. Do not enclose, cover, or put into service before inspection and approval.
2. Test completed piping systems according to authorities having jurisdiction.
3. Schedule tests and inspections by authorities having jurisdiction with at least 24 hours' advance notice.
4. Submit separate report for each test.
5. Gravity-Flow Storm Drainage Piping: Test according to requirements of authorities having jurisdiction, UNI-B-6, and the following:

a. Exception: Piping with soiltight joints unless required by authorities having jurisdiction.

C. Leaks and loss in test pressure constitute defects that must be repaired.

D. Replace leaking piping using new materials, and repeat testing until leakage is within allowances specified.

3.8 CLEANING

A. Clean interior of piping of dirt and superfluous materials.

END OF SECTION

SECTION 02741
HOT-MIX ASPHALT PAVING

PART 1 - GENERAL

1.1 RELATED DOCUMENTS

A. Drawings and general provisions of the Contract, including General and Supplementary Conditions and Division 01 Specification Sections, apply to this Section.

1.2 SUMMARY

A. Section Includes:
   1. Hot-mix asphalt paving.
   2. Pavement-marking paint.

B. Related Sections:
   1. Division 31 Section "Earth Moving" for aggregate subbase and base courses and for aggregate pavement shoulders.
   2. Division 32 Sections for other paving installed as part of crosswalks in asphalt pavement areas.

1.3 DEFINITION

A. Hot-Mix Asphalt Paving Terminology: Refer to ASTM D 8 for definitions of terms.

B. MDOT: Michigan Department of Transportation.

1.4 SYSTEM DESCRIPTION

A. Provide hot-mix asphalt paving according to materials, workmanship, and other applicable requirements of standard specifications of MDOT.

   1. Standard Specification: Michigan Department of Transportation Standards, current edition.

B. Measurement and payment provisions and safety program submittals included in standard specifications do not apply to this Section.

1.5 SUBMITTALS

A. Material Compliance Certificate: See attached certificate at the end of this Specification.

B. Job-Mix Designs: For each job mix proposed for the Work.

1.6 QUALITY ASSURANCE

A. Manufacturer Qualifications: A paving-mix manufacturer registered with and approved by authorities having jurisdiction or MDOT.

B. Testing Agency Qualifications: Qualified according to ASTM D 3666 for testing indicated.

C. Regulatory Requirements: Comply with materials, workmanship, and other applicable requirements of MDOT Standard for asphalt paving work.

1.7 DELIVERY, STORAGE, AND HANDLING

A. Deliver pavement-marking materials to Project site in original packages with seals unbroken and bearing manufacturer's labels containing brand name and type of material, date of manufacture, and directions for storage.

B. Store pavement-marking materials in a clean, dry, protected location within temperature range required by manufacturer. Protect stored materials from direct sunlight.

1.8 PROJECT CONDITIONS

A. Environmental Limitations: Do not apply asphalt materials if subgrade is wet or excessively damp, if rain is imminent or expected before time required for adequate cure, or if the following conditions are not met:

1. Prime Coat: Minimum surface temperature of 60 deg F (15.6 deg C).
2. Tack Coat: Minimum surface temperature of 60 deg F (15.6 deg C).
3. Asphalt Base Course: Minimum surface temperature of 40 deg F (4.4 deg C) and rising at time of placement.
4. Asphalt Surface Course: Minimum surface temperature of 60 deg F (15.6 deg C) at time of placement.

B. Pavement-Marking Paint: Proceed with pavement marking only on clean, dry surfaces and at a minimum ambient or surface temperature of 40 deg F (4.4 deg C) for oil-based materials and 55 deg F (12.8 deg C) for water-based materials, and not exceeding 95 deg F (35 deg C).

PART 2 - PRODUCTS

2.1 AGGREGATES

A. General: Use materials and gradations that have performed satisfactorily in previous installations.

2.2 ASPHALT MATERIALS

A. Prime Coat: Asphalt emulsion prime coat complying with MDOT requirements.

B. Tack Coat: Comply with MDOT requirements.

C. Water: Potable.

2.3 AUXILIARY MATERIALS

A. Pavement-Marking Paint: Alkyd-resin type, lead and chromate free, ready mixed, complying with AASHTO M 248, Type N; colors complying with FS TT-P-1952.

1. Color: White for general striping and pavement markings. Provide blue for barrier free parking areas.

2.4 MIXES

A. Hot-Mix Asphalt: Dense, hot-laid, hot-mix asphalt plant mixes approved by MDOT. Refer to Drawings for specific additional information.
1. Light Duty Pavement
   a. Base Course: MDOT 13A.
   b. Surface Course: MDOT 13A.
2. Heavy Duty Pavement:
   a. Base Course: MDOT 13 A
   b. Surface Course: MDOT 13A

PART 3 - EXECUTION

3.1 EXAMINATION

A. Verify that subgrade is dry and in suitable condition to begin paving.

B. Proof-roll subgrade below pavements with heavy pneumatic-tired equipment to identify soft pockets and areas of excess yielding. Do not proof-roll wet or saturated subgrades.

1. Completely proof-roll subgrade in one direction, repeating proof-rolling in direction perpendicular to first direction. Limit vehicle speed to 3 mph (5 km/h).

2. Proof roll with a loaded 10-wheel, tandem-axle dump truck weighing not less than 15 tons (13.6 tonnes).
3. Excavate soft spots, unsatisfactory soils, and areas of excessive pumping or rutting, as determined by Architect, and replace with compacted backfill or fill as directed.

C. Proceed with paving only after unsatisfactory conditions have been corrected.

3.2 SURFACE PREPARATION

A. General: Immediately before placing asphalt materials, remove loose and deleterious material from substrate surfaces. Ensure that prepared subgrade is ready to receive paving.

3.3 HOT-MIX ASPHALT PLACING

A. Machine place hot-mix asphalt on prepared surface, spread uniformly, and strike off. Place asphalt mix by hand to areas inaccessible to equipment in a manner that prevents segregation of mix. Place each course to required grade, cross section, and thickness when compacted.
1. Place hot-mix asphalt base course in number of lifts and thicknesses indicated.
2. Spread mix at minimum temperature of 250 deg F (121 deg C).
3. Begin applying mix along centerline of crown for crowned sections and on high side of one-way slopes unless otherwise indicated.
4. Regulate paver machine speed to obtain smooth, continuous surface free of pulls and tears in asphalt-paving mat.

B. Place paving in consecutive strips not less than 10 feet (3 m) wide unless infill edge strips of a lesser width are required.

1. After first strip has been placed and rolled, place succeeding strips and extend rolling to overlap previous strips. Complete a section of asphalt base course before placing asphalt surface course.

C. Promptly correct surface irregularities in paving course behind paver. Use suitable hand tools to remove excess material forming high spots. Fill depressions with hot-mix asphalt to prevent segregation of mix; use suitable hand tools to smooth surface.

3.4 JOINTS

A. Construct joints to ensure a continuous bond between adjoining paving sections. Construct joints free of depressions, with same texture and smoothness as other sections of hot-mix asphalt course.

1. Clean contact surfaces and apply tack coat to joints.
2. Construct transverse joints at each point where paver ends a day's work and resumes work at a subsequent time. Construct these joints using either "bulkhead" or "papered" method according to AI MS-22, for both "Ending a Lane" and "Resumption of Paving Operations."
3. Compact joints as soon as hot-mix asphalt will bear roller weight without excessive displacement.

4. Compact asphalt at joints to a density within 2 percent of specified course density.

3.5 COMPACTION

A. General: Begin compaction as soon as placed hot-mix paving will bear roller weight without excessive displacement. Compact hot-mix paving with hot, hand tampers or with vibratory-plate compactors in areas inaccessible to rollers.

1. Complete compaction before mix temperature cools to 185 deg F (85 deg C).

B. Breakdown Rolling: Complete breakdown or initial rolling immediately after rolling joints and outside edge. Examine surface immediately after breakdown rolling for indicated crown, grade, and smoothness. Correct laydown and rolling operations to comply with requirements.

C. Intermediate Rolling: Begin intermediate rolling immediately after breakdown rolling while hot-mix asphalt is still hot enough to achieve specified density. Continue rolling until hot-mix asphalt course has been uniformly compacted to the following density:

1. Average Density: 96 percent of reference laboratory density according to AASHTO T 245, but not less than 94 percent nor greater than 100 percent.

D. Finish Rolling: Finish roll paved surfaces to remove roller marks while hot-mix asphalt is still warm.

E. Edge Shaping: While surface is being compacted and finished, trim edges of pavement to proper alignment. Bevel edges while asphalt is still hot; compact thoroughly.

F. Repairs: Remove paved areas that are defective or contaminated with foreign materials and replace with fresh, hot-mix asphalt. Compact by rolling to specified density and surface smoothness.

G. Protection: After final rolling, do not permit vehicular traffic on pavement until it has cooled and hardened.

H. Erect barricades to protect paving from traffic until mixture has cooled enough not to become marked.

3.6 ASPHALT CURBS

A. Place hot-mix asphalt to curb cross section indicated or, if not indicated, to local standard shapes, by machine or by hand in wood or metal forms. Tamp hand-placed materials and screed to smooth finish. Remove forms after hot-mix asphalt has cooled.

3.7 INSTALLATION TOLERANCES

A. Thickness: Compact each course to produce the minimum thickness specified. No minus tolerance is provided.

B. Pavement Surface Smoothness: Compact each course to produce a surface smoothness within the following tolerances as determined by using a 10-foot (3-m) straightedge applied transversely or longitudinally to paved areas:

1. Base Course: 1/4 inch (6 mm).
2. Surface Course: 1/8 inch (3 mm).
3. Crowned Surfaces: Test with crowned template centered and at right angle to crown. Maximum allowable variance from template is 1/4 inch (6 mm).

3.8 PAVEMENT MARKING

A. Do not apply pavement-marking paint until layout, colors, and placement have been verified with Architect.

B. Allow paving to age for 30 days before starting pavement marking.

C. Sweep and clean surface to eliminate loose material and dust.

D. Apply paint with mechanical equipment to produce pavement markings, of dimensions indicated, with uniform, straight edges. Apply at manufacturer's recommended rates to provide a minimum wet film thickness of 15 mils (0.4 mm).

3.9 FIELD QUALITY CONTROL

A. Testing Agency: Owner will engage a qualified testing agency to perform tests and inspections.

B. Thickness: In-place compacted thickness of hot-mix asphalt courses will be determined according to ASTM D 3549.

C. Surface Smoothness: Finished surface of each hot-mix asphalt course will be tested for compliance with smoothness tolerances.

D. In-Place Density: Testing agency will take samples of uncompacted paving mixtures and compacted pavement according to ASTM D 979 or AASHTO T 168.

E. Remove and replace or install additional hot-mix asphalt where test results or measurements indicate that it does not comply with specified requirements.

3.10 DISPOSAL

A. Except for material indicated to be recycled, remove excavated materials from Project site and legally dispose of them in an EPA-approved landfill.

1. Do not allow milled materials to accumulate on-site.

END OF SECTION

MATERIAL COMPLIANCE CERTIFICATE

MATERIAL COMPLIANCE SUBMITTAL – SECTION_____

THIS DOCUMENT IS TO BE USED BY THIS CONTRACTOR TO INDICATE THE PRODUCTS/DEVICES INTENDED FOR USE IN THIS PROJECT WITHOUT THE NEED FOR A FORMAL SHOP DRAWING OR PRODUCT DATA SUBMITTAL. ITEMS LISTED ARE APPROVED PRODUCTS IN THE SPECIFICATIONS. NO SUBSTITUTIONS ALLOWED. SELECT ONE (1) SOURCE FOR EACH CATEGORY, SIGN THIS SHEET AND SUBMIT AS THE CONTRACTORS COMMITMENT TO USE PRODUCTS REQUIRED BY THE CONTRACT DOCUMENTS. **NO FURTHER SUBMITTALS ARE REQUIRED FOR THIS SECTION.**

AS CONTRACTOR FOR WORK SPECIFIED UNDER THE SECTION NAMED ABOVE, I AGREE TO USE ONLY THE PRODUCTS/DEVICES LISTED BELOW THAT WERE LISTED IN THE SPECIFICATION SECTION.

CONTRACTOR _____ SIGNATURE _____

DATE _____ PRINT NAME _____

TITLE _____

REVIEWED BY: _____

CONSTRUCTION MANAGER_____ SIGNATURE_____

DATE _____ PRINT NAME _____

REVIEWED BY:

KINGSCOTT ASSOCIATES, INC._____ SIGNATURE _____

DATE _____ PRINT NAME _____

LIST MANUFACTURERS NAME AND MODEL NUMBER FOR FABRICATED PRODUCTS. FOR PAVEMENTS, PROVIDE MDOT BITUMINOUS MIX AND/OR AGGREGATE DESIGNATIONS: (Use Additional Sheets as Required)

SECTION 02751
CEMENT CONCRETE PAVING

PART 1 - GENERAL

1.1 RELATED DOCUMENTS

A. Drawings and general provisions of the Contract, including General and Supplementary Conditions and Division 01 Specification Sections, apply to this Section.

1.2 SUMMARY

A. This Section includes exterior cement concrete pavement for the following:
   1. Curbs and gutters.
   2. Walkways.

B. Related Sections include the following:
   1. Division 31 Section "Earth Moving" for subgrade preparation, grading, and subbase course.

1.3 DEFINITIONS

A. Cementitious Materials: Portland cement alone or in combination with one or more of blended hydraulic cement, fly ash and other pozzolans, and ground granulated blast-furnace slag.

1.4 SUBMITTALS

A. Product Data: For each type of manufactured material and product indicated.

B. Design Mixtures: For each concrete pavement mixture. Include alternate mixture designs when characteristics of materials, Project conditions, weather, test results, or other circumstances warrant adjustments.

C. Material Certificates: Signed by manufacturers certifying that each of the following materials complies with requirements:

   1. Cementitious materials.
   2. Steel reinforcement and reinforcement accessories.
   3. Admixtures.
   4. Curing compounds.
   5. Joint fillers.

1.5 QUALITY ASSURANCE

A. Installer Qualifications: An experienced installer who has complete pavement work similar in material, design and extent to that indicated for the Project and whose work has resulted in construction with a record of successful in-service performance.

B. Manufacturer Qualifications: Manufacturer of ready-mixed concrete products who complies with ASTM C 94/C 94M requirements for production facilities and equipment.

1. Manufacturer certified according to NRMCA's "Certification of Ready Mixed Concrete Production Facilities."

C. ACI Publications: Comply with ACI 301, "Specification for Structural Concrete," unless modified by requirements in the Contract Documents.

D. Concrete Testing Service: Owner will engage a qualified independent testing agency to perform material evaluation tests and to design concrete mixtures.

1.6 PROJECT CONDITIONS

A. Traffic Control: Maintain access for vehicular and pedestrian traffic as required for other construction activities.

PART 2 - PRODUCTS

2.1 FORMS

A. Form Materials: Plywood, metal, metal-framed plywood, or other approved panel-type materials to provide full-depth, continuous, straight, smooth exposed surfaces.

1. Use flexible or curved forms for curves with a radius 100 feet (30.5 m) or less.

B. Form-Release Agent: Commercially formulated form-release agent that will not bond with, stain, or adversely affect concrete surfaces and will not impair subsequent treatments of concrete surfaces.

2.2 STEEL REINFORCEMENT

A. Reinforcing Bars: ASTM A 615/A 615M, Grade 60 (Grade 420); deformed.

B. Joint Dowel Bars: Plain steel bars, ASTM A 615/A 615M, Grade 60 (Grade 420). Cut bars true to length with ends square and free of burrs.

2.3 CONCRETE MATERIALS

A. Cementitious Material: Use the following cementitious materials, of the same type, brand, and source throughout the Project:

1. Portland Cement: ASTM C 150, Type I, gray.

B. Aggregate: MDOT 6AA Limestone.
1. Fine Aggregate: Free of materials with deleterious reactivity to alkali in cement.

C. Water: ASTM C 94/C 94M.

D. Air-Entraining Admixture: ASTM C 260.

2.4 CURING MATERIALS

A. Absorptive Cover: AASHTO M 182, Class 2, burlap cloth made from jute or kenaf, weighing approximately 9 oz./sq. yd. (305 g/sq. m) dry.

B. Moisture-Retaining Cover: ASTM C 171, polyethylene film or white burlap-polyethylene sheet.

C. Water: Potable.

D. Evaporation Retarder: Waterborne, monomolecular film forming; manufactured for application to fresh concrete.

E. White Waterborne Membrane-Forming Curing Compound: ASTM C 309, Type 2, Class B.

2.5 RELATED MATERIALS

A. Expansion- and Isolation-Joint-Filler Strips: ASTM D994- Asphalt Expansion Joint Filler. **Fiber expansion material is NOT acceptable.**

2.6 CONCRETE MIXTURES

A. Prepare design mixtures, proportioned according to ACI 301, for each type and strength of normal-weight concrete determined by either laboratory trial mixes or field experience.

1. Use a qualified independent testing agency for preparing and reporting proposed concrete mixture designs for the trial batch method.

B. Proportion mixtures to provide normal-weight concrete with the following properties:

1. Compressive Strength (28 Days): 4000 psi (27.6 MPa).
2. Maximum Water-Cementitious Materials Ratio at Point of Placement: 0.45.
3. Slump Limit: 4 inches (100 mm), plus or minus 1 inch (25 mm).

C. Add air-entraining admixture at manufacturer's prescribed rate to result in normal-weight concrete at point of placement having an air content as follows:

1. Air Content: 4-1/2 percent plus or minus 1.5 percent for 1-1/2-inch (38-mm) nominal maximum aggregate size.

D. Chemical Admixtures: Use admixtures according to manufacturer's written instructions.
   1. Use water-reducing and retarding admixture when required by high temperatures, low humidity, or other adverse placement conditions.

E. Cementitious Materials: Limit percentage, by weight, of cementitious materials other than portland cement according to ACI 301 requirements

2.7 CONCRETE MIXING

A. Ready-Mixed Concrete: Measure, batch, and mix concrete materials and concrete according to ASTM C 94/C 94M. Furnish batch certificates for each batch discharged and used in the Work.

   1. When air temperature is between 85 deg F (30 deg C) and 90 deg F (32 deg C), reduce mixing and delivery time from 1-1/2 hours to 75 minutes; when air temperature is above 90 deg F (32 deg C), reduce mixing and delivery time to 60 minutes.

PART 3 - EXECUTION

3.1 EXAMINATION

A. Examine exposed subgrades and subbase surfaces for compliance with requirements for dimensional, grading, and elevation tolerances.

B. Proof-roll prepared subbase surface below concrete pavements Insert locations with heavy pneumatic-tired equipment to identify soft pockets and areas of excess yielding.

   1. Completely proof-roll subbase in one direction and repeat in perpendicular direction. Limit vehicle speed to 3 mph (5 km/h).
   2. Proof-roll with a loaded 10-wheel tandem-axle dump truck weighing not less than 15 tons (13.6 tonnes).
   3. Subbase with soft spots and areas of pumping or rutting exceeding depth of 1/2 inch (13 mm) require correction according to requirements in Division 31 Section "Earth Moving."

C. Proceed with concrete pavement operations only after nonconforming conditions have been corrected and subgrade is ready to receive pavement.

3.2 PREPARATION

A. Remove loose material from compacted subbase surface immediately before placing concrete.

3.3 EDGE FORMS AND SCREED CONSTRUCTION

A. Set, brace, and secure edge forms, bulkheads, and intermediate screed guides for pavement to required lines, grades, and elevations. Install forms to allow continuous progress of work and so forms can remain in place at least 24 hours after concrete placement.

B. Clean forms after each use and coat with form-release agent to ensure separation from concrete without damage.

3.4 STEEL REINFORCEMENT

A. General: Comply with CRSI's "Manual of Standard Practice" for fabricating, placing, and supporting reinforcement.

B. Clean reinforcement of loose rust and mill scale, earth, ice, or other bond-reducing materials.

C. Arrange, space, and securely tie bars and bar supports to hold reinforcement in position during concrete placement. Maintain minimum cover to reinforcement.

3.5 JOINTS

A. General: Form construction, isolation, and contraction joints and tool edgings true to line with faces perpendicular to surface plane of concrete. Construct transverse joints at right angles to centerline, unless otherwise indicated.

B. Construction Joints: Set construction joints at side and end terminations of pavement and at locations where pavement operations are stopped for more than one-half hour unless pavement terminates at isolation joints.

1. Continue steel reinforcement across construction joints, unless otherwise indicated. Do not continue reinforcement through sides of pavement strips, unless otherwise indicated.
2. Doweled Joints: Install dowel bars and support assemblies at joints where indicated. Lubricate or asphalt-coat one-half of dowel length to prevent concrete bonding to one side of joint.

C. Isolation Joints: Form isolation joints of preformed joint-filler strips abutting concrete curbs, catch basins, manholes, inlets, structures, walks, other fixed objects, and where indicated.

1. Locate expansion joints at intervals of 50 feet (15.25 m), unless otherwise indicated.
2. Extend joint fillers full width and depth of joint.
3. Terminate joint filler not less than 1/2 inch (13 mm) or more than 1 inch (25 mm) below finished surface if joint sealant is indicated.
4. Furnish joint fillers in one-piece lengths. Where more than one length is required, lace or clip joint-filler sections together.
5. Protect top edge of joint filler during concrete placement with metal, plastic, or other temporary preformed cap. Remove protective cap after concrete has been placed on both sides of joint.

D. Contraction Joints: Form weakened-plane contraction joints, sectioning concrete into areas as indicated. Construct contraction joints for a depth equal to at least one-fourth of the concrete thickness, as follows:

1. Grooved Joints: Form contraction joints after initial floating by grooving and finishing each edge of joint with grooving tool to a 1/4-inch (6-mm) radius. Repeat grooving of

contraction joints after applying surface finishes. Eliminate groover marks on concrete surfaces.

2. Sawed Joints will NOT be accepted.

E. Edging: Tool edges of pavement, gutters, curbs, and joints in concrete after initial floating with an edging tool to a 1/4-inch (6-mm) radius. Repeat tooling of edges after applying surface finishes. Eliminate tool marks on concrete surfaces.

3.6 CONCRETE PLACEMENT

A. Inspection: Before placing concrete, inspect and complete formwork installation, steel reinforcement, and items to be embedded or cast in. Notify other trades to permit installation of their work.

B. Remove snow, ice, or frost from subbase surface and reinforcement before placing concrete. Do not place concrete on frozen surfaces.

C. Moisten subbase to provide a uniform dampened condition at time concrete is placed. Do not place concrete around manholes or other structures until they are at required finish elevation and alignment.

D. Comply with ACI 301 requirements for measuring, mixing, transporting, and placing concrete.

E. Do not add water to concrete during delivery or at Project site.

F. Do not add water to fresh concrete after testing.

G. Deposit and spread concrete in a continuous operation between transverse joints. Do not push or drag concrete into place or use vibrators to move concrete into place.

H. Place concrete in two operations; strike off initial pour for entire width of placement and to the required depth below finish surface. Lay welded wire fabric or fabricated bar mats immediately in final position. Place top layer of concrete, strike off, and screed.

1. Remove and replace concrete that has been placed for more than 15 minutes without being covered by top layer, or use bonding agent if approved by Architect.

I. Screed pavement surfaces with a straightedge and strike off.

J. Commence initial floating using bull floats or darbies to impart an open textured and uniform surface plane before excess moisture or bleed water appears on the surface. Do not further disturb concrete surfaces before beginning finishing operations or spreading surface treatments.

K. Curbs and Gutters: When automatic machine placement is used for curb and gutter placement, submit revised mix design and laboratory test results that meet or exceed requirements. Produce curbs and gutters to required cross section, lines, grades, finish, and jointing as specified for formed concrete. If results are not approved, remove and replace with formed concrete.

L. Cold-Weather Placement: Comply with ACI 306.1 and as follows. Protect concrete work from physical damage or reduced strength that could be caused by frost, freezing actions, or low temperatures.

1. When air temperature has fallen to or is expected to fall below 40 deg F (4.4 deg C), uniformly heat water and aggregates before mixing to obtain a concrete mixture temperature of not less than 50 deg F (10 deg C) and not more than 80 deg F (27 deg C) at point of placement.
2. Do not use frozen materials or materials containing ice or snow.
3. Do not use calcium chloride, salt, or other materials containing antifreeze agents or chemical accelerators unless otherwise specified and approved in mix designs.

M. Hot-Weather Placement: Comply with ACI 301 and as follows when hot-weather conditions exist:

1. Cool ingredients before mixing to maintain concrete temperature below 90 deg F (32 deg C) at time of placement. Chilled mixing water or chopped ice may be used to control temperature, provided water equivalent of ice is calculated to total amount of mixing water. Using liquid nitrogen to cool concrete is Contractor's option.
2. Cover steel reinforcement with water-soaked burlap so steel temperature will not exceed ambient air temperature immediately before embedding in concrete.
3. Fog-spray forms, steel reinforcement, and subgrade just before placing concrete. Keep subgrade moisture uniform without standing water, soft spots, or dry areas.

3.7 FLOAT FINISHING

A. General: Do not add water to concrete surfaces during finishing operations.

B. Float Finish: Begin the second floating operation when bleed-water sheen has disappeared and concrete surface has stiffened sufficiently to permit operations. Float surface with power-driven floats, or by hand floating if area is small or inaccessible to power units. Finish surfaces to true planes. Cut down high spots and fill low spots. Refloat surface immediately to uniform granular texture.
1. Medium-to-Fine-Textured Broom Finish: Draw a soft bristle broom across float-finished concrete surface perpendicular to line of traffic to provide a uniform, fine-line texture.
2. Medium-to-Coarse-Textured Broom Finish: Provide a coarse finish by striating float-finished concrete surface 1/16 to 1/8 inch (1.6 to 3 mm) deep with a stiff-bristled broom, perpendicular to line of traffic.

3.8 CONCRETE PROTECTION AND CURING

A. General: Protect freshly placed concrete from premature drying and excessive cold or hot temperatures.

B. Comply with ACI 306.1 for cold-weather protection.

C. Evaporation Retarder: Apply evaporation retarder to concrete surfaces if hot, dry, or windy conditions cause moisture loss approaching 0.2 lb/sq. ft. x h (1 kg/sq. m x h) before and during

finishing operations. Apply according to manufacturer's written instructions after placing, screeding, and bull floating or darbying concrete, but before float finishing.

D. Begin curing after finishing concrete but not before free water has disappeared from concrete surface.

E. Curing Methods: Cure concrete by moisture curing, moisture-retaining-cover curing, curing compound, or a combination of these as follows:

1. Moist Curing: Keep surfaces continuously moist for not less than seven days with the following materials:

   a. Water.
   b. Continuous water-fog spray.
   c. Absorptive cover, water saturated and kept continuously wet. Cover concrete surfaces and edges with 12-inch (300-mm) lap over adjacent absorptive covers.

2. Moisture-Retaining-Cover Curing: Cover concrete surfaces with moisture-retaining cover for curing concrete, placed in widest practicable width, with sides and ends lapped at least 12 inches (300 mm), and sealed by waterproof tape or adhesive. Immediately repair any holes or tears during curing period using cover material and waterproof tape.
3. Curing Compound: Apply uniformly in continuous operation by power spray or roller according to manufacturer's written instructions. Recoat areas subjected to heavy rainfall within three hours after initial application. Maintain continuity of coating and repair damage during curing period.

3.9 PAVEMENT TOLERANCES

A. Comply with tolerances of ACI 117 and as follows:

1. Elevation: 1/4 inch (6 mm).
2. Thickness: Plus 3/8 inch (10 mm), minus 1/4 inch (6 mm).
3. Surface: Gap below 10-foot- (3-m-) long, unleveled straightedge not to exceed 1/4 inch (6 mm).
4. Lateral Alignment and Spacing of Tie Bars and Dowels: 1 inch (25 mm).
5. Vertical Alignment of Tie Bars and Dowels: 1/4 inch (6 mm).
6. Joint Spacing: 3 inches (75 mm).
7. Contraction Joint Depth: Plus 1/4 inch (6 mm), no minus.
8. Joint Width: Plus 1/8 inch (3 mm), no minus.

3.10 FIELD QUALITY CONTROL

A. Testing Agency: Owner will engage a qualified independent testing and inspecting agency to perform field tests and inspections and prepare test reports.

3.11 REPAIRS AND PROTECTION

A. Remove and replace concrete pavement that is broken, damaged, or defective or that does not comply with requirements in this Section.

B. Drill test cores, where directed by Architect, when necessary to determine magnitude of cracks or defective areas. Fill drilled core holes in satisfactory pavement areas with portland cement concrete bonded to pavement with epoxy adhesive.

C. Protect concrete from damage. Exclude traffic from pavement for at least 14 days after placement. When construction traffic is permitted, maintain pavement as clean as possible by removing surface stains and spillage of materials as they occur.

D. Maintain concrete pavement free of stains, discoloration, dirt, and other foreign material. Sweep concrete pavement not more than two days before date scheduled for Substantial Completion inspections.

END OF SECTION

SECTION 02840
WALK, ROAD AND PARKING APPURTENANCES

PART 1 - GENERAL

1.1 RELATED DOCUMENTS

A. Drawings and general provisions of the Contract, including General and Supplementary Conditions and Division 1 Specification Sections, apply to this Section.

1.2 SUMMARY

A. This Section includes provisions for the following items:

1. Traffic Regulatory Signs.

1.3 REFERENCES

A. Michigan Department of transportation (MDOT), *Manual of Uniform Traffic Control Devices*, and current edition of *MDOT Standard Specifications*.

1.4 SUBMITTALS

A. General: Submit the following according to the Conditions of the Contract and Division 1 Specification Sections.

B. Shop drawings for all regulatory and directional signs indicating construction, materials and text sizes.

C. Manufacturer's color charts showing the full range of colors available.

PART 2 - PRODUCTS

2.1 REGULATORY SIGNS

A. See plan and details for sign locations and installation.

B. All regulatory signs shall comply with MDOT Manual of Uniform Traffic Control Devices.

C. Regulatory sign panels shall be .090 aluminum with baked enamel finish.

D. All regulatory sign panels and posts shall be painted per Owner's color selection.

E. Text shall be reflective, white scotchlite or approved alternate.

2.2 FINISHES

E. General: Specifications are based on products of The Sherwin-Williams Company.

1. Prime Coat: Zinc Clad IV - B69A8 / B69V8 - 1 coat.
2. Intermediate Coat: Recoatable Epoxy - B67H5 / B67V5 - 1 coat.
3. Finish Coat: Hi-Solids Polyurethane - B65 / B60V30 - 1 coat.
4. Colors: To match existing signage.

PART 3 - EXECUTION

3.1 INSTALLATION

A. Install all regulatory signs in locations indicated on Drawings and per details.

3.2 SHOP COATING

A. Surface Preparation: Commercial blast cleaning in conformance with SSPC-SP6 or NACE 3.

B. Apply Prime Coat per manufacturers recommendations to a dry film thickness of 3.0 mils minimum.

C. Apply Intermediate Coat per manufacturers recommendations to a dry film thickness of 4.0 mils minimum.

D. Apply Finish Coat per manufacturers recommendations to a dry film thickness of 3.0 mils minimum. Coating must have full coverage.

E. Finished Appearance shall be of approved color, texture, and coverage, smooth and free from runs, sags, crawls, skips or other defects.

END OF SECTION

SECTION 02920
LAWNS AND GRASSES

PART 1 - GENERAL

1.1 RELATED DOCUMENTS

A. Drawings and general provisions of the Contract, including General and Supplementary Conditions and Division 1 Specification Sections, apply to this Section.

1.2 SUMMARY

A. This Section includes the following:

1. Seeding.

B. Related Sections include the following:

1. Division 31 Section "Site Clearing" for topsoil stripping and stockpiling.
2. Division 31 Section "Earthwork" for excavation, filling and backfilling, and rough grading.

1.3 DEFINITIONS

A. Finish Grade: Elevation of finished surface of planting soil.

B. Manufactured Soil: Soil produced off-site by homogeneously blending mineral soils or sand with stabilized organic soil amendments to produce topsoil or planting soil.

C. Planting Soil: Native or imported topsoil, manufactured topsoil, or surface soil modified to become topsoil; mixed with soil amendments.

D. Subgrade: Surface or elevation of subsoil remaining after completing excavation, or top surface of a fill or backfill immediately beneath planting soil.

1.4 SUBMITTALS

A. Product Data: For each type of product indicated.

B. Certification of Grass Seed: From seed vendor for each grass-seed monostand or mixture stating the botanical and common name and percentage by weight of each species and variety, and percentage of purity, germination, and weed seed. Include the year of production and date of packaging.

C. Qualification Data: For landscape Installer.

D. Planting Schedule: Indicating anticipated planting dates for each type of planting.

1.5 QUALITY ASSURANCE

A. Installer Qualifications: A qualified landscape installer whose work has resulted in successful lawn establishment.

1. Installer's Field Supervision: Require Installer to maintain an experienced full-time supervisor on Project site when planting is in progress.

B. Soil-Testing Laboratory Qualifications: An independent laboratory, recognized by the State Department of Agriculture, with the experience and capability to conduct the testing indicated and that specializes in types of tests to be performed.

C. Topsoil Analysis: Furnish soil analysis by a qualified soil-testing laboratory stating percentages of organic matter; gradation of sand, silt, and clay content; cation exchange capacity; deleterious material; pH; and mineral and plant-nutrient content of topsoil.

1. Report suitability of topsoil for lawn growth. State recommended quantities of nitrogen, phosphorus, and potash nutrients and soil amendments to be added to produce a satisfactory topsoil.

D. Preinstallation Conference: Conduct conference at Project site to comply with requirements in Division 1 Section "Project Management and Coordination."

1.6 DELIVERY, STORAGE, AND HANDLING

A. Seed: Deliver seed in original sealed, labeled, and undamaged containers.

1.7 SCHEDULING

A. Planting Restrictions: Plant during one of the following periods. Coordinate planting periods with maintenance periods to provide required maintenance from date of Substantial Completion.

1. Spring Planting: April 15 through May 15.
2. Fall Planting: August 15 through September 15.

B. Weather Limitations: Proceed with planting only when existing and forecasted weather conditions permit.

1.8 LAWN MAINTENANCE

A. Begin maintenance immediately after each area is planted and continue until acceptable lawn is established, but for not less than the following periods:

1. Seeded Lawns: 60 days from date of Substantial Completion.

    a. When full maintenance period has not elapsed before end of planting season, or if lawn is not fully established, continue maintenance during next planting season.

B. Maintain and establish lawn by watering, fertilizing, weeding, mowing, trimming, replanting, and other operations. Roll, regrade, and replant bare or eroded areas and remulch to produce a uniformly smooth lawn.

1. In areas where mulch has been disturbed by wind or maintenance operations, add new mulch. Anchor as required to prevent displacement.

C. Watering: Provide and maintain temporary piping, hoses, and lawn-watering equipment to convey water from sources and to keep lawn uniformly moist to a depth of 4 inches (100 mm).

1. Schedule watering to prevent wilting, puddling, erosion, and displacement of seed or mulch. Lay out temporary watering system to avoid walking over muddy or newly planted areas.
2. Water lawn at a minimum rate of 1 inch (25 mm) per week.

D. Mow lawn as soon as top growth is tall enough to cut. Repeat mowing to maintain specified height without cutting more than 40 percent of grass height. Remove no more than 40 percent of grass-leaf growth in initial or subsequent mowings. Do not delay mowing until grass blades bend over and become matted. Do not mow when grass is wet. Schedule initial and subsequent mowings to maintain the following grass height:

1. Mow grass 2 to 3 inches (50 to 75 mm) high.

E. Lawn Postfertilization: Apply fertilizer after initial mowing and when grass is dry.

1. Use fertilizer that will provide actual nitrogen of at least 1 lb/1000 sq. ft. (0.45 kg/92.9 sq. m) to lawn area.

PART 2 - PRODUCTS

2.1 SEED

A. Grass Seed: Fresh, clean, dry, new-crop seed complying with AOSA's "Journal of Seed Technology; Rules for Testing Seeds" for purity and germination tolerances.

B. Seed Species: Seed of grass species as follows, with not less than 95 percent germination, not less than 98 percent pure seed, and not more than 0.5 percent weed seed:

General Seed Mix:

Species	Mix	Purity	Germination
Annual Rye	10%	98%	95%
*Perennial Rye	30%	98%	95%
Creeping Red Fescue	20%	98%	95%
**Turf Type Tall Fescue	40%	98%	95%

*Note: Provide a minimum of two varieties of Perennial Rye from the following list: Affinity, APM, Buccaneer, Nighthawk, Partner, Saturn, Seville.

**Note: Provide a minimum of two varieties of Turf Type Tall Fescue from the following list: Jubilee, Veranda, Morgan, Stagecoach.

2.2 TOPSOIL

A. Topsoil: ASTM D 5268, pH range of 5.5 to 7, a minimum of 4 percent organic material content; free of stones 1 inch (25 mm) or larger in any dimension and other extraneous materials harmful to plant growth.

1. Topsoil Source: Reuse surface soil stockpiled on-site. Verify suitability of stockpiled surface soil to produce topsoil. Clean surface soil of roots, plants, sod, stones, clay lumps, and other extraneous materials harmful to plant growth.

a. Supplement with imported or manufactured topsoil from off-site sources when quantities are insufficient. Obtain topsoil displaced from naturally well-drained construction or mining sites where topsoil occurs at least 4 inches (100 mm) deep; do not obtain from bogs or marshes.

2.3 PLANTING ACCESSORIES

A. Selective Herbicides: EPA registered and approved, of type recommended by manufacturer for application.

2.4 FERTILIZER

A. Commercial Fertilizer: Commercial-grade complete fertilizer of neutral character, consisting of fast- and slow-release nitrogen, 50 percent derived from natural organic sources of urea formaldehyde, phosphorous, and potassium in the following composition:

1. Composition: 1 lb/1000 sq. ft. (0.45 kg/92.9 sq. m) of actual nitrogen, 4 percent phosphorous, and 2 percent potassium, by weight.

2.5 MULCHES

A. Fiber Mulch: Biodegradable, dyed-wood, cellulose-fiber mulch; nontoxic; free of plant-growth or germination inhibitors; with maximum moisture content of 15 percent and a pH range of 4.5 to 6.5.

B. Nonasphaltic Tackifier: Colloidal tackifier recommended by fiber-mulch manufacturer for slurry application; nontoxic and free of plant-growth or germination inhibitors.Asphalt emulsion below may be used as a tackifier in a hydroseeded slurry or to temporarily bond straw mulch in place.

2.6 EROSION-CONTROL MATERIALS

A. Erosion-Control Blankets: Biodegradable wood excelsior, straw, or coconut-fiber mat enclosed in a photodegradable plastic mesh. Include manufacturer's recommended steel wire staples, 6 inches (150 mm) long.

PART 3 - EXECUTION

3.1 EXAMINATION

A. Examine areas to receive lawns and grass for compliance with requirements and other conditions affecting performance. Proceed with installation only after unsatisfactory conditions have been corrected.

3.2 PREPARATION

A. Protect structures, utilities, sidewalks, pavements, and other facilities, trees, shrubs, and plantings from damage caused by planting operations.

1. Protect adjacent and adjoining areas from hydromulch overspray.

B. Provide erosion-control measures to prevent erosion or displacement of soils and discharge of soil-bearing water runoff or airborne dust to adjacent properties and walkways.

3.3 LAWN PREPARATION

A. Limit lawn subgrade preparation to areas to be planted.

B. Newly Graded Subgrades: Loosen subgrade to a minimum depth of 6 inches (150 mm). Remove stones larger than 1 inch (25 mm) in any dimension and sticks, roots, rubbish, and other extraneous matter and legally dispose of them off Owner's property.

1. Spread planting soil mix to a depth of 6 inches (150 mm) but not less than required to meet finish grades after light rolling and natural settlement. Do not spread if planting soil or subgrade is frozen, muddy, or excessively wet.

a. Spread approximately one-half the thickness of planting soil mix over loosened subgrade. Mix thoroughly into top 2 inches (50 mm) of subgrade. Spread remainder of planting soil mix.

C. Finish Grading: Grade planting areas to a smooth, uniform surface plane with loose, uniformly fine texture. Grade to within plus or minus 1/2 inch (13 mm) of finish elevation. Roll and rake,

remove ridges, and fill depressions to meet finish grades. Limit fine grading to areas that can be planted in the immediate future.

D. Moisten prepared lawn areas before planting if soil is dry. Water thoroughly and allow surface to dry before planting. Do not create muddy soil.

E. Restore areas if eroded or otherwise disturbed after finish grading and before planting.

3.4 LAWN RENOVATION

A. Renovate existing lawn damaged by Contractor's operations, such as storage of materials or equipment and movement of vehicles.

1. Reestablish lawn where settlement or washouts occur or where minor regrading is required.

B. Remove sod and vegetation from diseased or unsatisfactory lawn areas; do not bury in soil.

C. Remove topsoil containing foreign materials resulting from Contractor's operations, including oil drippings, fuel spills, stone, gravel, and other construction materials, and replace with new topsoil.

D. Mow, dethatch, core aerate, and rake existing lawn.

E. Remove weeds before seeding. Where weeds are extensive, apply selective herbicides as required. Do not use pre-emergence herbicides.

F. Remove waste and foreign materials, including weeds, soil cores, grass, vegetation, and turf, and legally dispose of them off Owner's property.

G. Till stripped, bare, and compacted areas thoroughly to a soil depth of 6 inches (150 mm).

H. Apply seed and hydromulch as required for new lawns.

I. Water newly planted areas and keep moist until new lawn is established.

3.5 SATISFACTORY LAWNS

A. Satisfactory Seeded Lawn: At end of maintenance period, a healthy, uniform, close stand of grass has been established, free of weeds and surface irregularities, with coverage exceeding 90 percent over any 10 sq. ft. (0.92 sq. m) and bare spots not exceeding 5 by 5 inches (125 by 125 mm).

B. Reestablish lawns that do not comply with requirements and continue maintenance until lawns are satisfactory.

3.6 CLEANUP AND PROTECTION

A. Promptly remove soil and debris created by lawn work from paved areas. Clean wheels of vehicles before leaving site to avoid tracking soil onto roads, walks, or other paved areas.

B. Erect barricades and warning signs as required to protect newly planted areas from traffic. Maintain barricades throughout maintenance period and remove after lawn is established.

C. Remove erosion-control measures after grass establishment period.

END OF SECTION

SECTION 02930
EXTERIOR PLANTS

PART 1 - GENERAL

1.1 RELATED DOCUMENTS

A. Drawings and general provisions of the Contract, including General and Supplementary Conditions and Division 1 Specification Sections, apply to this Section.

1.2 SUMMARY

A. This Section includes the following:

1. Trees.
2. Shrubs
3. Ground Cover
4. Perennials
5. Edgings

B. Related Sections include the following:

1. Division 31 Section "Site Clearing" for protection of existing trees and planting, topsoil stripping and stockpiling, and site clearing.
2. Division 31 Section "Earth Moving" for excavation, filling, and rough grading and for subsurface aggregate drainage and drainage backfill materials.

1.3 DEFINITIONS

A. Balled and Burlapped Stock: Exterior plants dug with firm, natural balls of earth in which they are grown, with ball size not less than sizes indicated; wrapped, tied, rigidly supported, and drum-laced as recommended by ANSI Z60.1.

B. Container-Grown Stock: Healthy, vigorous, well-rooted exterior plants grown in a container with well-established root system reaching sides of container and maintaining a firm ball when removed from container. Container shall be rigid enough to hold ball shape and protect root mass during shipping and be sized according to ANSI Z60.1 for kind, type, and size of exterior plant required.

C. Finish Grade: Elevation of finished surface of planting soil or mulch.

D. Planting Soil: Native or imported topsoil, manufactured topsoil, or surface soil modified to become topsoil.

E. Subgrade: Surface or elevation of subsoil remaining after completing excavation, or top surface of a fill or backfill, before placing planting soil.

1.4 SUBMITTALS

A. Product Data: For each type of product indicated.

B. Product Certificates: For each type of manufactured product, signed by product manufacturer, and complying with the following:

1. Manufacturer's certified analysis for standard products.

C. Qualification Data: For landscape Installer.

D. Planting Schedule: Indicating anticipated planting dates for exterior plants.

E. Maintenance Instructions: Recommended procedures to be established by Owner for maintenance of exterior plants during a calendar year. Submit before expiration of required maintenance periods.

1.5 QUALITY ASSURANCE

A. Installer Qualifications: A qualified landscape installer whose work has resulted in successful establishment of exterior plants.

1. Installer's Field Supervision: Require Installer to maintain an experienced full-time supervisor on Project site when exterior planting is in progress.

B. Provide quality, size, genus, species, and variety of exterior plants indicated, complying with applicable requirements in ANSI Z60.1, "American Standard for Nursery Stock."

1. Selection of exterior plants purchased under allowances will be made by Architect, who will tag plants at their place of growth before they are prepared for transplanting.

C. Tree and Shrub Measurements: Measure according to ANSI Z60.1 with branches and trunks or canes in their normal position. Do not prune to obtain required sizes. Take caliper measurements 6 inches (150 mm) above ground for trees up to 4-inch (100-mm) caliper size, and 12 inches (300 mm) above ground for larger sizes. Measure main body of tree or shrub for height and spread; do not measure branches or roots tip-to-tip.

D. Preinstallation Conference: Conduct conference at Project site to comply with requirements in Division 1 Section "Project Management and Coordination."

1.6 DELIVERY, STORAGE, AND HANDLING

A. Deliver exterior plants freshly dug.

B. Do not prune trees and shrubs before delivery, except as approved by Architect. Protect bark, branches, and root systems from sun scald, drying, sweating, whipping, and other handling and tying damage. Do not bend or bind-tie trees or shrubs in such a manner as to destroy their natural shape. Provide protective covering of exterior plants during delivery. Do not drop exterior plants during delivery.

C. Handle planting stock by root ball.

D. Deliver exterior plants after preparations for planting have been completed and install immediately. If planting is delayed more than six hours after delivery, set exterior plants trees in shade, protect from weather and mechanical damage, and keep roots moist.

1. Set balled stock on ground and cover ball with soil, peat moss, sawdust, or other acceptable material.
2. Do not remove container-grown stock from containers before time of planting.
3. Water root systems of exterior plants stored on-site with a fine-mist spray. Water as often as necessary to maintain root systems in a moist condition.

1.7 COORDINATION

A. Weather Limitations: Proceed with planting only when existing and forecasted weather conditions permit.

B. Coordination with Lawns: Plant trees and shrubs after finish grades are established and before planting lawns, unless otherwise acceptable to Architect.

1. When planting trees and shrubs after lawns, protect lawn areas and promptly repair damage caused by planting operations.

1.8 WARRANTY

A. Special Warranty: Warrant the following exterior plants, for the warranty period indicated, against defects including death and unsatisfactory growth, except for defects resulting from lack of adequate maintenance, neglect, or abuse by Owner, or incidents that are beyond Contractor's control.

1. Warranty Period: One year from date of Substantial Completion.
2. Remove dead exterior plants immediately. Replace immediately unless required to plant in the succeeding planting season.
3. Replace exterior plants that are more than 25 percent dead or in an unhealthy condition at end of warranty period.
4. A limit of one replacement of each exterior plant will be required, except for losses or replacements due to failure to comply with requirements.

1.9 MAINTENANCE

A. Trees and Shrubs: Maintain for the following maintenance period by pruning, cultivating, watering, weeding, fertilizing, restoring planting saucers, tightening and repairing stakes and guy supports, and resetting to proper grades or vertical position, as required to establish healthy, viable plantings. Spray as required to keep trees and shrubs free of insects and disease. Restore or replace damaged tree wrappings.

1. Maintenance Period: Six months from date of Substantial Completion.

B. Ground Cover and Plants: Maintain for the following maintenance period by watering, weeding, fertilizing, and other operations as required to establish healthy, viable plantings:

1. Maintenance Period: Three months from date of Substantial Completion.

PART 2 - PRODUCTS

2.1 TREE AND SHRUB MATERIAL

A. General: Furnish nursery-grown trees and shrubs complying with ANSI Z60.1, with healthy root systems developed by transplanting or root pruning. Provide well-shaped, fully branched, healthy, vigorous stock free of disease, insects, eggs, larvae, and defects such as knots, sun scald, injuries, abrasions, and disfigurement.

B. Grade: Provide trees and shrubs of sizes and grades complying with ANSI Z60.1 for type of trees and shrubs required. Trees and shrubs of a larger size may be used if acceptable to Architect, with a proportionate increase in size of roots or balls.

C. Label at least one tree and one shrub of each variety and caliper with a securely attached, waterproof tag bearing legible designation of botanical and common name.

D. If formal arrangements or consecutive order of trees or shrubs is shown, select stock for uniform height and spread, and number label to assure symmetry in planting.

2.2 SHADE AND FLOWERING TREES

A. Shade Trees: Single-stem trees with straight trunk, well-balanced crown, and intact leader, of height and caliper indicated, complying with ANSI Z60.1 for type of trees required.

1. Provide balled and burlapped trees.
2. Branching Height: One-half of tree height.

B. Small Upright Trees: Branched or pruned naturally according to species and type, with relationship of caliper, height, and branching according to ANSI Z60.1; stem form as follows:

1. Stem Form: Single stem.
2. Provide balled and burlapped trees.

C. Multistem Trees: Branched or pruned naturally according to species and type, with relationship of caliper, height, and branching according to ANSI Z60.1; stem form as follows:

1. Stem Form: Clump.
2. Provide balled and burlapped trees.

2.3 DECIDUOUS SHRUBS

A. Form and Size: Deciduous shrubs with not less than the minimum number of canes required by and measured according to ANSI Z60.1 for type, shape, and height of shrub.

1. Provide balled and burlapped or container-grown shrubs.

2.4 CONIFEROUS EVERGREENS

A. Form and Size: Normal-quality, well-balanced, coniferous evergreens, of type, height, spread, and shape required, complying with ANSI Z60.1.

1. Heavy Grade: " XX."

2. Provide balled and burlapped trees.

2.5 GROUND COVER PLANTS

A. Ground Cover: Provide ground cover of species indicated, established and well rooted in pots or similar containers, and complying with ANSI Z60.1.

2.6 PERENNIALS

A. Perennials: Provide healthy, field-grown plants from a commercial nursery, of species and variety shown or listed.

2.7 TOPSOIL

A. Topsoil: ASTM D 5268, pH range of 5.5 to 7, a minimum of 4 percent organic material content; free of stones 1 inch (25 mm) or larger in any dimension and other extraneous materials harmful to plant growth.

1. Topsoil Source: Reuse surface soil stockpiled on-site. Verify suitability of stockpiled surface soil to produce topsoil. Clean surface soil of roots, plants, sod, stones, clay lumps, and other extraneous materials harmful to plant growth.

a. Supplement with imported or manufactured topsoil from off-site sources when quantities are insufficient. Obtain topsoil displaced from naturally well-drained construction or mining sites where topsoil occurs at least 4 inches (100 mm) deep; do not obtain from agricultural land, bogs or marshes.

2.8 INORGANIC SOIL AMENDMENTS

A. Lime: ASTM C 602, agricultural limestone containing a minimum 80 percent calcium carbonate equivalent and as follows:

1. Class: Class T, with a minimum 99 percent passing through No. 8 (2.36-mm) sieve and a minimum 75 percent passing through No. 60 (0.25-mm) sieve.
2. Class: Class O, with a minimum 95 percent passing through No. 8 (2.36-mm) sieve and a minimum 55 percent passing through No. 60 (0.25-mm) sieve.
3. Provide lime in form of dolomitic limestone.

2.9 FERTILIZER

A. Commercial Fertilizer: Commercial-grade complete fertilizer of neutral character, consisting of fast- and slow-release nitrogen, 50 percent derived from natural organic sources of urea formaldehyde, phosphorous, and potassium in the following composition:

1. Composition: 1 lb/1000 sq. ft. (0.45 kg/92.9 sq. m) of actual nitrogen, 4 percent phosphorous, and 2 percent potassium, by weight.

2.10 MULCHES

A. Organic Mulch: Free from deleterious materials and suitable as a top dressing of trees and shrubs, consisting of the following:

1. Type: Shredded hardwood.

2.11 WEED-CONTROL BARRIERS

A. Nonwoven Fabric: Polypropylene or polyester fabric, 3 oz./sq. yd. (101 g/sq. m) minimum.

B. Composite Fabric: Woven, needle-punched polypropylene substrate bonded to a nonwoven polypropylene fabric, 4.8 oz./sq. yd. (162 g/sq. m).

2.12 LANDSCAPE EDGINGS

A. Aluminum Edging: Standard-profile extruded-aluminum edging, ASTM B 221 (ASTM B 221M), alloy 6063-T6, fabricated in standard lengths with interlocking sections with loops stamped from face of sections to receive stakes.

1. Edging Size: 3/16 inch (4.8 mm) wide by 4 inches (100 mm) deep.

2. Stakes: Aluminum, ASTM B 221 (ASTM B 221M), alloy 6061-T6, approximately 1-1/2 inches (38 mm) wide by 12 inches (300 mm) long.

3. Finish: Black anodized.

4. Paint Color: Black.

B. Manufacturers: Subject to compliance with requirements, provide products by one of the following:

1. Aluminum Edging:

a. Curv-Rite Aluminum Edgings.

b. Permaloc Aluminum Edging.

c. Russell, J. D. Company (The).

d. Sure-loc Aluminum Edging Corporation.

2.13 MISCELLANEOUS PRODUCTS

A. Antidesiccant: Water-insoluble emulsion, permeable moisture retarder, film forming, for trees and shrubs. Deliver in original, sealed, and fully labeled containers and mix according to manufacturer's written instructions.

B. Trunk-Wrap Tape: Two layers of crinkled paper cemented together with bituminous material, 4-inch- (100-mm-) wide minimum, with stretch factor of 33 percent.

PART 3 - EXECUTION

3.1 EXAMINATION

A. Examine areas to receive exterior plants for compliance with requirements and conditions affecting installation and performance. Proceed with installation only after unsatisfactory conditions have been corrected.

3.2 PREPARATION

A. Protect structures, utilities, sidewalks, pavements, and other facilities, and lawns and existing exterior plants from damage caused by planting operations.

B. Provide erosion-control measures to prevent erosion or displacement of soils and discharge of soil-bearing water runoff or airborne dust to adjacent properties and walkways.

C. Lay out individual tree and shrub locations and areas for multiple exterior plantings. Stake locations, outline areas, adjust locations when requested, and obtain Architect's acceptance of layout before planting. Make minor adjustments as required.

D. Lay out exterior plants at locations directed by Architect. Stake locations of individual trees and shrubs and outline areas for multiple plantings.

E. Apply antidesiccant to trees and shrubs using power spray to provide an adequate film over trunks, branches, stems, twigs, and foliage to protect during digging, handling, and transportation.

1. If deciduous trees and shrubs are moved in full leaf, spray with antidesiccant at nursery before moving and again two weeks after planting.

3.3 PLANTING BED ESTABLISHMENT

A. Loosen subgrade of planting beds to a minimum depth of 6 inches (150 mm). Remove stones larger than 1 inch (25 mm) in any dimension and sticks, roots, rubbish, and other extraneous matter and legally dispose of them off Owner's property.

1. Spread planting soil mix to a depth of 8 inches (200 mm) but not less than required to meet finish grades after natural settlement. Do not spread if planting soil or subgrade is frozen, muddy, or excessively wet.

a. Spread approximately one-half the thickness of planting soil mix over loosened subgrade. Mix thoroughly into top 2 inches (50 mm) of subgrade. Spread remainder of planting soil mix.

B. Finish Grading: Grade planting beds to a smooth, uniform surface plane with loose, uniformly fine texture. Roll and rake, remove ridges, and fill depressions to meet finish grades.

C. Restore planting beds if eroded or otherwise disturbed after finish grading and before planting.

3.4 TREE AND SHRUB EXCAVATION

A. Pits and Trenches: Excavate circular pits with sides sloped inward. Trim base leaving center area raised slightly to support root ball and assist in drainage. Do not further disturb base. Scarify sides of plant pit smeared or smoothed during excavation.

1. Excavate approximately three times as wide as ball diameter for balled and burlapped stock.
2. Excavate at least 12 inches (300 mm) wider than root spread and deep enough to accommodate vertical roots for bare-root stock.

B. Subsoil removed from excavations may be used as backfill.

C. Obstructions: Notify Architect if unexpected rock or obstructions detrimental to trees or shrubs are encountered in excavations.

1. Hardpan Layer: Drill 6-inch- (150-mm-) diameter holes into free-draining strata or to a depth of 10 feet (3 m), whichever is less, and backfill with free-draining material.

D. Drainage: Notify Architect if subsoil conditions evidence unexpected water seepage or retention in tree or shrub pits.

E. Fill excavations with water and allow to percolate away before positioning trees and shrubs.

3.5 TREE AND SHRUB PLANTING

A. Set balled and burlapped stock plumb and in center of pit or trench with top of root ball flush with adjacent finish grades.

1. Remove burlap and wire baskets from tops of root balls and partially from sides, but do not remove from under root balls. Remove pallets, if any, before setting. Do not use planting stock if root ball is cracked or broken before or during planting operation.
2. Place planting soil mix around root ball in layers, tamping to settle mix and eliminate voids and air pockets. When pit is approximately one-half backfilled, water thoroughly before placing remainder of backfill. Repeat watering until no more water is absorbed. Water again after placing and tamping final layer of planting soil mix.

B. Set container-grown stock plumb and in center of pit or trench with top of root ball 1 inch (25 mm) above adjacent finish grades.

1. Carefully remove root ball from container without damaging root ball or plant.

2. Place planting soil mix around root ball in layers, tamping to settle mix and eliminate voids and air pockets. When pit is approximately one-half backfilled, water thoroughly before placing remainder of backfill. Repeat watering until no more water is absorbed. Water again after placing and tamping final layer of planting soil mix.

C. Organic Mulching: Apply 3-inch (75-mm) average thickness of organic mulch extending 12 inches (300 mm) beyond edge of planting pit or trench. Do not place mulch within 3 inches (75 mm) of trunks or stems.

D. Wrap trees of 2-inch (50-mm) caliper and larger with trunk-wrap tape. Start at base of trunk and spiral cover trunk to height of first branches. Overlap wrap, exposing half the width, and securely attach without causing girdling. Inspect tree trunks for injury, improper pruning, and insect infestation; take corrective measures required before wrapping.

3.6 TREE AND SHRUB PRUNING

A. Prune, thin, and shape trees and shrubs according to standard horticultural practice. Prune trees to retain required height and spread. Unless otherwise indicated by Architect, do not cut tree leaders; remove only injured or dead branches from flowering trees. Prune shrubs to retain natural character. Shrub sizes indicated are sizes after pruning.

3.7 GROUND COVER AND PLANT PLANTING

A. Set out and space ground cover and plants as indicated.

B. Dig holes large enough to allow spreading of roots, and backfill with planting soil.

C. Work soil around roots to eliminate air pockets and leave a slight saucer indentation around plants to hold water.

D. Water thoroughly after planting, taking care not to cover plant crowns with wet soil.

E. Protect plants from hot sun and wind; remove protection if plants show evidence of recovery from transplanting shock.

3.8 EDGING INSTALLATION

A. Aluminum Edging: Install aluminum edging where indicated according to manufacturer's written instructions. Anchor with aluminum stakes spaced approximately 36 inches (900 mm) apart, driven below top elevation of edging.

3.9 CLEANUP AND PROTECTION

A. During exterior planting, keep adjacent pavings and construction clean and work area in an orderly condition.

B. Protect exterior plants from damage due to landscape operations, operations by other contractors and trades, and others. Maintain protection during installation and maintenance periods. Treat, repair, or replace damaged exterior planting.

3.10 DISPOSAL

A. Disposal: Remove surplus soil and waste material, including excess subsoil, unsuitable soil, trash, and debris, and legally dispose of them off Owner's property.

END OF SECTION

SECTION 03300
CAST-IN-PLACE CONCRETE

PART 1 - GENERAL

1.1 RELATED DOCUMENTS

A. Drawings and general provisions of the Contract, including General and Supplementary Conditions and Division 1 Specification Sections, apply to this Section.

1.2 SUMMARY

A. This Section specifies cast-in place concrete, including formwork, reinforcement, concrete materials, mixture design, placement procedures, and finishes, for the following:

1. Footings.
2. Foundation walls.
3. Slabs-on-grade.

B. Related Sections include the following:

1. Division 2 Section "Earthwork" for drainage fill under slabs-on-grade.
2. Division 2 Section "Cement Concrete Pavement" for concrete pavement and walks.
3. Division 2 Section "Decorative Cement Concrete Pavement" for decorative concrete pavement and walks.
4. Division 3 Section "Cast-in-Place Architectural Concrete" for general building applications of specially finished formed concrete.

1.3 DEFINITIONS

A. Cementitious Materials: Portland cement alone or in combination with one or more of the following: blended hydraulic cement, fly ash and other pozzolans, ground granulated blast-furnace slag, and silica fume; subject to compliance with requirements.

1.4 SUBMITTALS

A. Product Data: For each type of product indicated.

B. Design Mixtures: For each concrete mixture. Submit alternate design mixtures when characteristics of materials, Project conditions, weather, test results, or other circumstances warrant adjustments.

1. Indicate amounts of mixing water to be withheld for later addition at Project site.

C. Floor surface flatness and levelness measurements to determine compliance with specified tolerances.

1.5 QUALITY ASSURANCE

A. Installer Qualifications: A qualified installer who employs on Project personnel qualified as ACI-certified Flatwork Technician and Finisher and a supervisor who is an ACI-certified Concrete Flatwork Technician.

B. Manufacturer Qualifications: A firm experienced in manufacturing ready-mixed concrete products and that complies with ASTM C 94/C 94M requirements for production facilities and equipment.

1. Manufacturer certified according to NRMCA's "Certification of Ready Mixed Concrete Production Facilities."

C. Testing Agency Qualifications: An independent agency, qualified according to ASTM C 1077 and ASTM E 329 for testing indicated, as documented according to ASTM E 548.

1. Personnel conducting field tests shall be qualified as ACI Concrete Field Testing Technician, Grade 1, according to ACI CP-01 or an equivalent certification program.
2. Personnel performing laboratory tests shall be ACI-certified Concrete Strength Testing Technician and Concrete Laboratory Testing Technician - Grade I. Testing Agency laboratory supervisor shall be an ACI-certified Concrete Laboratory Testing Technician - Grade II.

D. Source Limitations: Obtain each type or class of cementitious material of the same brand from the same manufacturer's plant, obtain aggregate from one source, and obtain admixtures through one source from a single manufacturer.

E. ACI Publications: Comply with the following unless modified by requirements in the Contract Documents:

1. ACI 318, "Specification for Structural Concrete."
2. ACI 117, "Specifications for Tolerances for Concrete Construction and Materials."

F. Concrete Testing Service: Engage a qualified independent testing agency to perform material evaluation tests and to design concrete mixtures.

G. Preinstallation Conference: Conduct conference at Project site to comply with requirements in Division 1 Section "Project Management and Coordination."

1. Before submitting design mixtures, review concrete design mixture and examine procedures for ensuring quality of concrete materials. Require representatives of each entity directly concerned with cast-in-place concrete to attend, including the following:

a. Contractor's superintendent.
b. Independent testing agency responsible for concrete design mixtures.
c. Ready-mix concrete manufacturer.
d. Concrete subcontractor.

2. Review special inspection and testing and inspecting agency procedures for field quality control and concrete protection.

1.6 DELIVERY, STORAGE, AND HANDLING

A. Steel Reinforcement: Deliver, store, and handle steel reinforcement to prevent bending and damage.

B. Waterstops: Store waterstops under cover to protect from moisture, sunlight, dirt, oil, and other contaminants.

PART 2 - PRODUCTS

2.1 FORM-FACING MATERIALS

A. Smooth-Formed Finished Concrete: Form-facing panels that will provide continuous, true, and smooth concrete surfaces. Furnish in largest practicable sizes to minimize number of joints.

1. Plywood, metal, or other approved panel materials.
2. Exterior-grade plywood panels, suitable for concrete forms, complying with DOC PS 1, and as follows:

a. High-density overlay, Class 1 or better.
b. Medium-density overlay, Class 1 or better; mill-release agent treated and edge sealed.
c. Structural 1, B-B or better; mill oiled and edge sealed.
d. B-B (Concrete Form), Class 1 or better; mill oiled and edge sealed.

B. Rough-Formed Finished Concrete: Plywood, lumber, metal, or another approved material. Provide lumber dressed on at least two edges and one side for tight fit.

C. Chamfer Strips: Wood, metal, PVC, or rubber strips, 3/4 by 3/4 inch, minimum.

D. Rustication Strips: Wood, metal, PVC, or rubber strips, kerfed for ease of form removal.

E. Form-Release Agent: Commercially formulated form-release agent that will not bond with, stain, or adversely affect concrete surfaces and will not impair subsequent treatments of concrete surfaces.

1. Formulate form-release agent with rust inhibitor for steel form-facing materials.

F. Form Ties: Factory-fabricated, removable or snap-off metal or glass-fiber-reinforced plastic form ties designed to resist lateral pressure of fresh concrete on forms and to prevent spalling of concrete on removal.

1. Furnish units that will leave no corrodible metal closer than 1 inch to the plane of exposed concrete surface.
2. Furnish ties that, when removed, will leave holes no larger than 1 inch in diameter in concrete surface.
3. Furnish ties with integral water-barrier plates to walls indicated to receive dampproofing or waterproofing.

2.2 STEEL REINFORCEMENT

A. Reinforcing Bars: ASTM A 615/A 615M, Grade 60, deformed.

B. Plain-Steel Welded Wire Reinforcement: ASTM A 185, plain, fabricated from as-drawn steel wire into flat sheets.

2.3 REINFORCEMENT ACCESSORIES

A. Joint Dowel Bars: ASTM A 615/A 615M, Grade 60, plain-steel bars, cut bars true to length with ends square and free of burrs.

B. Epoxy-Coated Joint Dowel Bars: ASTM A 615/A 615M, Grade 60, plain-steel bars, ASTM A 775/A 775M epoxy coated.

C. Bar Supports: Bolsters, chairs, spacers, and other devices for spacing, supporting, and fastening reinforcing bars and welded wire reinforcement in place. Manufacture bar supports from steel wire, plastic, or precast concrete according to CRSI's "Manual of Standard Practice," of greater compressive strength than concrete and as follows:

1. For concrete surfaces exposed to view where legs of wire bar supports contact forms, use CRSI Class 1 plastic-protected steel wire or CRSI Class 2 stainless-steel bar supports.

2.4 CONCRETE MATERIALS

A. Cementitious Material: Use the following cementitious materials, of the same type, brand, and source, throughout Project:

1. Portland Cement: ASTM C 150, Type I, Supplement with the following:

a. Fly Ash: ASTM C 618, as noted on structural drawings.

B. Normal-Weight Aggregates: ASTM C 33, coarse aggregate or better, graded. Provide aggregates from a single source.

1. Maximum Coarse-Aggregate Size: 3/4 inch nominal.
2. Fine Aggregate: Free of materials with deleterious reactivity to alkali in cement.

C. Water: ASTM C 94/C 94M and potable.

2.5 ADMIXTURES

A. Air-Entraining Admixture: ASTM C 260.

B. Chemical Admixtures: Provide admixtures certified by manufacturer to be compatible with other admixtures and that will not contribute water-soluble chloride ions exceeding those permitted in hardened concrete. Do not use calcium chloride or admixtures containing calcium chloride.

1. Water-Reducing Admixture: ASTM C 494/C 494M, Type A.
2. Retarding Admixture: ASTM C 494/C 494M, Type B.
3. Water-Reducing and Retarding Admixture: ASTM C 494/C 494M, Type D.

4. High-Range, Water-Reducing Admixture: ASTM C 494/C 494M, Type F.
5. High-Range, Water-Reducing and Retarding Admixture: ASTM C 494/C 494M, Type G.
6. Plasticizing and Retarding Admixture: ASTM C 1017/C 1017M, Type II.

2.6 FIBER REINFORCEMENT

A. Fibrous Reinforcement: Steel Fibers to be low carbon, cold drawn steel wire conforming to ASTM A820 Type 1. Steel fibers to be corrugated, minimum 2 inches in length. Dosage of steel fibers is to be minimum 30 lbs/yds, or as recommended by manufacturer.

2.7 WATERSTOPS

2.8 VAPOR RETARDERS

A. Plastic Vapor Retarder: ASTM E 1745, Class B. Include manufacturer's recommended adhesive or pressure-sensitive tape.

2.9 FLOOR AND SLAB TREATMENTS

2.10 CURING MATERIALS

A. Evaporation Retarder: Waterborne, monomolecular film forming, manufactured for application to fresh concrete.

B. Clear, Waterborne, Membrane-Forming Curing Compound: ASTM C 309, Type 1, Class B, dissipating.

C. Clear, Waterborne, Membrane-Forming Curing and Sealing Compound: ASTM C 1315, Type 1, Class A.

2.11 RELATED MATERIALS

A. Expansion- and Isolation-Joint-Filler Strips: ASTM D 1751, asphalt-saturated cellulosic fiber or ASTM D 1752, cork or self-expanding cork.

B. Semirigid Joint Filler: Two-component, semirigid, 100 percent solids, epoxy resin with a Type A shore durometer hardness of 80 per ASTM D 2240.

C. Bonding Agent: ASTM C 1059, Type II, non-redispersible, acrylic emulsion or styrene butadiene.

D. Epoxy Bonding Adhesive: ASTM C 881, two-component epoxy resin, capable of humid curing and bonding to damp surfaces, of class suitable for application temperature and of grade to suit requirements, and as follows:

1. Types IV and V, load bearing, for bonding hardened or freshly mixed concrete to hardened concrete.

2.12 CONCRETE MIXTURES, GENERAL

A. Prepare design mixtures for each type and strength of concrete, proportioned on the basis of laboratory trial mixture or field test data, or both, according to ACI 301.

1. Use a qualified independent testing agency for preparing and reporting proposed mixture designs based on laboratory trial mixtures.

B. Cementitious Materials: Limit percentage, by weight, of cementitious materials other than portland cement in concrete as follows:

1. Fly Ash: 25 percent.

C. Limit water-soluble, chloride-ion content in hardened concrete to 0.06 percent by weight of cement.

D. Admixtures: Use admixtures according to manufacturer's written instructions.

1. Use water-reducing admixture in concrete, as required, for placement and workability.
2. Use water-reducing and retarding admixture when required by high temperatures, low humidity, or other adverse placement conditions.
3. Use water-reducing admixture in pumped concrete, concrete for heavy-use industrial slabs and parking structure slabs, concrete required to be watertight, and concrete with a water-cementitious materials ratio below 0.50.

2.13 CONCRETE MIXTURES FOR BUILDING ELEMENTS

A. Footings: Proportion normal-weight concrete mixture as follows:

1. Minimum Compressive Strength: 3500 psi at 28 days.
2. Maximum Water-Cementitious Materials Ratio: 0.50.
3. Slump Limit: 4 inches, plus or minus 1 inch.
4. Air Content: Not applicable.

B. Foundation Walls: Proportion normal-weight concrete mixture as follows:

1. Minimum Compressive Strength: 3500 psi at 28 days.
2. Maximum Water-Cementitious Materials Ratio: 0.50.
3. Slump Limit: 4 inches, plus or minus 1 inch.
4. Air Content: Not applicable.

C. Slabs-on-Grade: Proportion normal-weight concrete mixture as follows:

1. Minimum Compressive Strength: 4000 psi at 28 days.
2. Minimum Cementitious Materials Content: 470 lb/cu. yd.
3. Maximum water/cement ratio to be 0.45.
4. Steel fibers at 30 lb/yd3.
5. Slump Limit: 3 inches, plus or minus 1 inch.
6. Air Content: 6 percent, plus or minus 1.5 percent at point of delivery for exterior concrete.
7. Air Content: Do not allow air content of troweled finished floors to exceed 3 percent.

2.14 FABRICATING REINFORCEMENT

A. Fabricate steel reinforcement according to CRSI's "Manual of Standard Practice."

2.15 CONCRETE MIXING

A. Ready-Mixed Concrete: Measure, batch, mix, and deliver concrete according to ASTM C 94/C 94M and ASTM C 1116, and furnish batch ticket information.

1. When air temperature is between 85 and 90 deg F, reduce mixing and delivery time from 1-1/2 hours to 75 minutes; when air temperature is above 90 deg F, reduce mixing and delivery time to 60 minutes.

PART 3 - EXECUTION

3.1 FORMWORK

A. Design, erect, shore, brace, and maintain formwork, according to ACI 301, to support vertical, lateral, static, and dynamic loads, and construction loads that might be applied, until structure can support such loads.

B. Construct formwork so concrete members and structures are of size, shape, alignment, elevation, and position indicated, within tolerance limits of ACI 117.

C. Limit concrete surface irregularities, designated by ACI 347R as abrupt or gradual, as follows:

1. Class C, 1/2 inch for rough-formed finished surfaces.

D. Construct forms tight enough to prevent loss of concrete mortar.

E. Fabricate forms for easy removal without hammering or prying against concrete surfaces. Provide crush or wrecking plates where stripping may damage cast concrete surfaces. Provide top forms for inclined surfaces steeper than 1.5 horizontal to 1 vertical.

1. Install keyways, reglets, recesses, and the like, for easy removal.
2. Do not use rust-stained steel form-facing material.

F. Set edge forms, bulkheads, and intermediate screed strips for slabs to achieve required elevations and slopes in finished concrete surfaces. Provide and secure units to support screed strips; use strike-off templates or compacting-type screeds.

G. Provide temporary openings for cleanouts and inspection ports where interior area of formwork is inaccessible. Close openings with panels tightly fitted to forms and securely braced to prevent loss of concrete mortar. Locate temporary openings in forms at inconspicuous locations.

H. Do not chamfer exterior corners and edges of permanently exposed concrete.

I. Form openings, chases, offsets, sinkages, keyways, reglets, blocking, screeds, and bulkheads required in the Work. Determine sizes and locations from trades providing such items.

J. Clean forms and adjacent surfaces to receive concrete. Remove chips, wood, sawdust, dirt, and other debris just before placing concrete.

K. Retighten forms and bracing before placing concrete, as required, to prevent mortar leaks and maintain proper alignment.

L. Coat contact surfaces of forms with form-release agent, according to manufacturer's written instructions, before placing reinforcement.

3.2 EMBEDDED ITEMS

A. Place and secure anchorage devices and other embedded items required for adjoining work that is attached to or supported by cast-in-place concrete. Use setting drawings, templates, diagrams, instructions, and directions furnished with items to be embedded.

3.3 REMOVING AND REUSING FORMS

A. General: Formwork for sides of beams, walls, columns, and similar parts of the Work that does not support weight of concrete may be removed after cumulatively curing at not less than 50 deg F for 24 hours after placing concrete, if concrete is hard enough to not be damaged by form-removal operations and curing and protection operations are maintained.

1. Leave formwork for beam soffits, joists, slabs, and other structural elements that supports weight of concrete in place until concrete has achieved at least 70 percent of its 28-day design compressive strength.
2. Remove forms only if shores have been arranged to permit removal of forms without loosening or disturbing shores.

B. Clean and repair surfaces of forms to be reused in the Work. Split, frayed, delaminated, or otherwise damaged form-facing material will not be acceptable for exposed surfaces. Apply new form-release agent.

C. When forms are reused, clean surfaces, remove fins and laitance, and tighten to close joints. Align and secure joints to avoid offsets. Do not use patched forms for exposed concrete surfaces unless approved by Architect.

3.4 VAPOR RETARDERS

A. Plastic Vapor Retarders: Place, protect, and repair vapor retarders according to ASTM E 1643 and manufacturer's written instructions.

1. Lap joints 6 inches and seal with manufacturer's recommended tape.

3.5 STEEL REINFORCEMENT

A. General: Comply with CRSI's "Manual of Standard Practice" for placing reinforcement.

1. Do not cut or puncture vapor retarder. Repair damage and reseal vapor retarder before placing concrete.

B. Clean reinforcement of loose rust and mill scale, earth, ice, and other foreign materials that would reduce bond to concrete.

C. Accurately position, support, and secure reinforcement against displacement. Locate and support reinforcement with bar supports to maintain minimum concrete cover. Do not tack weld crossing reinforcing bars.

D. Set wire ties with ends directed into concrete, not toward exposed concrete surfaces.

E. Install welded wire reinforcement in longest practicable lengths on bar supports spaced to minimize sagging. Lap edges and ends of adjoining sheets at least one mesh spacing. Offset laps of adjoining sheet widths to prevent continuous laps in either direction. Lace overlaps with wire.

F. Epoxy-Coated Reinforcement: Repair cut and damaged epoxy coatings with epoxy repair coating according to ASTM D 3963/D 3963M. Use epoxy-coated steel wire ties to fasten epoxy-coated steel reinforcement.

3.6 JOINTS

A. General: Construct joints true to line with faces perpendicular to surface plane of concrete.

B. Construction Joints: Install so strength and appearance of concrete are not impaired, at locations indicated or as approved by Architect.

1. Form keyed joints as indicated. Embed keys at least 1-1/2 inches into concrete.
2. Space vertical joints in walls at 20'-0" o.c.. Locate joints beside piers integral with walls, near corners, and in concealed locations where possible.
3. Use a bonding agent at locations where fresh concrete is placed against hardened or partially hardened concrete surfaces.
4. Use epoxy-bonding adhesive at locations where fresh concrete is placed against hardened or partially hardened concrete surfaces.

C. Contraction Joints in Slabs-on-Grade: Form weakened-plane contraction joints, sectioning concrete into areas as indicated. Construct contraction joints for a depth equal to at least one-fourth of concrete thickness as follows:

1. Sawed Joints: Form contraction joints with power saws equipped with shatterproof abrasive or diamond-rimmed blades. Cut 1/8-inch- wide joints into concrete when cutting action will not tear, abrade, or otherwise damage surface and before concrete develops random contraction cracks.

D. Isolation Joints in Slabs-on-Grade: After removing formwork, install joint-filler strips at slab junctions with vertical surfaces, such as column pedestals, foundation walls, grade beams, and other locations, as indicated.

1. Extend joint-filler strips full width and depth of joint, terminating flush with finished concrete surface, unless otherwise indicated.
2. Terminate full-width joint-filler strips not less than 1/2 inch or more than 1 inch below finished concrete surface where joint sealants, specified in Division 7 Section "Joint Sealants," are indicated.

3. Install joint-filler strips in lengths as long as practicable. Where more than one length is required, lace or clip sections together.

E. Doweled Joints: Install dowel bars and support assemblies at joints where indicated. Lubricate or asphalt coat one-half of dowel length to prevent concrete bonding to one side of joint.

3.7 CONCRETE PLACEMENT

A. Before placing concrete, verify that installation of formwork, reinforcement, and embedded items is complete and that required inspections have been performed.

B. Do not add water to concrete during delivery, at Project site, or during placement unless approved by Architect.

C. Before test sampling and placing concrete, water may be added at Project site, subject to limitations of ACI 301.

1. Do not add water to concrete after adding high-range water-reducing admixtures to mixture.

D. Deposit concrete continuously in one layer or in horizontal layers of such thickness that no new concrete will be placed on concrete that has hardened enough to cause seams or planes of weakness. If a section cannot be placed continuously, provide construction joints as indicated. Deposit concrete to avoid segregation.

1. Deposit concrete in horizontal layers of depth to not exceed formwork design pressures and in a manner to avoid inclined construction joints.
2. Consolidate placed concrete with mechanical vibrating equipment according to ACI 301.
3. Do not use vibrators to transport concrete inside forms. Insert and withdraw vibrators vertically at uniformly spaced locations to rapidly penetrate placed layer and at least 6 inches into preceding layer. Do not insert vibrators into lower layers of concrete that have begun to lose plasticity. At each insertion, limit duration of vibration to time necessary to consolidate concrete and complete embedment of reinforcement and other embedded items without causing mixture constituents to segregate.

E. Deposit and consolidate concrete for floors and slabs in a continuous operation, within limits of construction joints, until placement of a panel or section is complete.

1. Consolidate concrete during placement operations so concrete is thoroughly worked around reinforcement and other embedded items and into corners.
2. Maintain reinforcement in position on chairs during concrete placement.
3. Screed slab surfaces with a straightedge and strike off to correct elevations.
4. Slope surfaces uniformly to drains where required.
5. Begin initial floating using bull floats or darbies to form a uniform and open-textured surface plane, before excess bleedwater appears on the surface. Do not further disturb slab surfaces before starting finishing operations.

F. Cold-Weather Placement: Comply with ACI 306.1 and as follows. Protect concrete work from physical damage or reduced strength that could be caused by frost, freezing actions, or low temperatures.

1. When average high and low temperature is expected to fall below 40 deg F for three successive days, maintain delivered concrete mixture temperature within the temperature range required by ACI 301.
2. Do not use frozen materials or materials containing ice or snow. Do not place concrete on frozen subgrade or on subgrade containing frozen materials.
3. Do not use calcium chloride, salt, or other materials containing antifreeze agents or chemical accelerators unless otherwise specified and approved in mixture designs.

G. Hot-Weather Placement: Comply with ACI 301 and as follows:

1. Maintain concrete temperature below 90 deg F at time of placement. Chilled mixing water or chopped ice may be used to control temperature, provided water equivalent of ice is calculated to total amount of mixing water. Using liquid nitrogen to cool concrete is Contractor's option.
2. Fog-spray forms, steel reinforcement, and subgrade just before placing concrete. Keep subgrade uniformly moist without standing water, soft spots, or dry areas.

3.8 FINISHING FORMED SURFACES

A. Rough-Formed Finish: As-cast concrete texture imparted by form-facing material with tie holes and defects repaired and patched. Remove fins and other projections that exceed specified limits on formed-surface irregularities.

1. Apply to concrete surfaces not exposed to public view.

B. Related Unformed Surfaces: At tops of walls, horizontal offsets, and similar unformed surfaces adjacent to formed surfaces, strike off smooth and finish with a texture matching adjacent formed surfaces. Continue final surface treatment of formed surfaces uniformly across adjacent unformed surfaces, unless otherwise indicated.

3.9 FINISHING FLOORS AND SLABS

A. General: Comply with ACI 302.1R recommendations for screeding, restraightening, and finishing operations for concrete surfaces. Do not wet concrete surfaces.

B. Float Finish: Consolidate surface with power-driven floats or by hand floating if area is small or inaccessible to power driven floats. Restraighten, cut down high spots, and fill low spots. Repeat float passes and restraightening until surface is left with a uniform, smooth, granular texture.

1. Apply float finish to surfaces to be covered, or sand-bed terrazzo.

C. Trowel Finish: After applying float finish, apply first troweling and consolidate concrete by hand or power-driven trowel. Continue troweling passes and restraighten until surface is free of trowel marks and uniform in texture and appearance. Grind smooth any surface defects that would telegraph through applied coatings or floor coverings.

1. Apply a trowel finish to surfaces exposed to view or to be covered with resilient flooring or carpet, paint, or another thin-film-finish coating system.
2. Finish surfaces to the following tolerances, according to ASTM E 1155, for a randomly trafficked floor surface:

a. Specified overall values of flatness, F(F) 25; and of levelness, F(L) 20; with minimum local values of flatness, F(F) 17; and of levelness, F(L) 15.
b. Specified overall values of flatness, F(F) 35; and of levelness, F(L) 25; with minimum local values of flatness, F(F) 24; and of levelness, F(L) 17; for slabs-on-grade.
c. Specified overall values of flatness, F(F) 30; and of levelness, F(L) 20; with minimum local values of flatness, F(F) 24; and of levelness, F(L) 15; for suspended slabs.
d. Specified overall values of flatness, F(F) 45; and of levelness, F(L) 35; with minimum local values of flatness, F(F) 30; and of levelness, F(L) 24.

3. Finish and measure surface so gap at any point between concrete surface and an unleveled, freestanding, 10-foot- long straightedge resting on 2 high spots and placed anywhere on the surface does not exceed 1/8 inch

D. Trowel and Fine-Broom Finish: Apply a first trowel finish to surfaces where ceramic or quarry tile is to be installed by either thickset or thin-set method. While concrete is still plastic, slightly scarify surface with a fine broom.

1. Comply with flatness and levelness tolerances for trowel finished floor surfaces.

E. Broom Finish: Apply a broom finish to exterior concrete platforms, steps, and ramps, and elsewhere as indicated.

1. Immediately after float finishing, slightly roughen trafficked surface by brooming with fiber-bristle broom perpendicular to main traffic route. Coordinate required final finish with Architect before application.

3.10 MISCELLANEOUS CONCRETE ITEMS

A. Filling In: Fill in holes and openings left in concrete structures, unless otherwise indicated, after work of other trades is in place. Mix, place, and cure concrete, as specified, to blend with in-place construction. Provide other miscellaneous concrete filling indicated or required to complete the Work.

B. Curbs: Provide monolithic finish to interior curbs by stripping forms while concrete is still green and by steel-troweling surfaces to a hard, dense finish with corners, intersections, and terminations slightly rounded.

C. Equipment Bases and Foundations: Provide machine and equipment bases and foundations as shown on Drawings. Set anchor bolts for machines and equipment at correct elevations, complying with diagrams or templates from manufacturer furnishing machines and equipment.

D. Steel Pan Stairs: Provide concrete fill for steel pan stair treads, landings, and associated items. Cast-in inserts and accessories as shown on Drawings. Screed, tamp, and trowel-finish concrete surfaces.

3.11 CONCRETE PROTECTING AND CURING

A. General: Protect freshly placed concrete from premature drying and excessive cold or hot temperatures. Comply with ACI 306.1 for cold-weather protection and ACI 301 for hot-weather protection during curing.

B. Evaporation Retarder: Apply evaporation retarder to unformed concrete surfaces if hot, dry, or windy conditions cause moisture loss approaching 0.2 lb/sq. ft. x h before and during finishing operations. Apply according to manufacturer's written instructions after placing, screeding, and bull floating or darbying concrete, but before float finishing.

C. Formed Surfaces: Cure formed concrete surfaces, including underside of beams, supported slabs, and other similar surfaces. If forms remain during curing period, moist cure after loosening forms. If removing forms before end of curing period, continue curing for the remainder of the curing period.

D. Unformed Surfaces: Begin curing immediately after finishing concrete. Cure unformed surfaces, including floors and slabs, concrete floor toppings, and other surfaces.

E. Cure concrete according to ACI 308.1, by one or a combination of the following methods:

1. Curing Compound: Apply uniformly in continuous operation by power spray or roller according to manufacturer's written instructions. Recoat areas subjected to heavy rainfall within three hours after initial application. Maintain continuity of coating and repair damage during curing period.

    a. After curing period has elapsed, remove curing compound without damaging concrete surfaces by method recommended by curing compound manufacturer unless manufacturer certifies curing compound will not interfere with bonding of floor covering used on Project.

2. Curing and Sealing Compound: Apply uniformly to floors and slabs indicated in a continuous operation by power spray or roller according to manufacturer's written instructions. Recoat areas subjected to heavy rainfall within three hours after initial application. Repeat process 24 hours later and apply a second coat. Maintain continuity of coating and repair damage during curing period.

3.12 JOINT FILLING

A. Prepare, clean, and install joint filler according to manufacturer's written instructions.

1. Defer joint filling until concrete has aged at least **[one]** **[six]** month(s). Do not fill joints until construction traffic has permanently ceased.

B. Remove dirt, debris, saw cuttings, curing compounds, and sealers from joints; leave contact faces of joint clean and dry.

C. Install semirigid joint filler full depth in saw-cut joints and at least 2 inches deep in formed joints. Overfill joint and trim joint filler flush with top of joint after hardening.

3.13 CONCRETE SURFACE REPAIRS

A. Defective Concrete: Repair and patch defective areas when approved by Architect. Remove and replace concrete that cannot be repaired and patched to Architect's approval.

B. Patching Mortar: Mix dry-pack patching mortar, consisting of one part portland cement to two and one-half parts fine aggregate passing a No. 16 sieve, using only enough water for handling and placing.

C. Repairing Formed Surfaces: Surface defects include color and texture irregularities, cracks, spalls, air bubbles, honeycombs, rock pockets, fins and other projections on the surface, and stains and other discolorations that cannot be removed by cleaning.

1. Immediately after form removal, cut out honeycombs, rock pockets, and voids more than 1/2 inch in any dimension in solid concrete, but not less than 1 inch in depth. Make edges of cuts perpendicular to concrete surface. Clean, dampen with water, and brush-coat holes and voids with bonding agent. Fill and compact with patching mortar before bonding agent has dried. Fill form-tie voids with patching mortar or cone plugs secured in place with bonding agent.
2. Repair defects on surfaces exposed to view by blending white portland cement and standard portland cement so that, when dry, patching mortar will match surrounding color. Patch a test area at inconspicuous locations to verify mixture and color match before proceeding with patching. Compact mortar in place and strike off slightly higher than surrounding surface.
3. Repair defects on concealed formed surfaces that affect concrete's durability and structural performance as determined by Architect.

D. Repairing Unformed Surfaces: Test unformed surfaces, such as floors and slabs, for finish and verify surface tolerances specified for each surface. Correct low and high areas. Test surfaces sloped to drain for trueness of slope and smoothness; use a sloped template.

1. Repair finished surfaces containing defects. Surface defects include spalls, popouts, honeycombs, rock pockets, crazing and cracks in excess of 0.01 inch wide or that penetrate to reinforcement or completely through unreinforced sections regardless of width, and other objectionable conditions.
2. After concrete has cured at least 14 days, correct high areas by grinding.
3. Correct localized low areas during or immediately after completing surface finishing operations by cutting out low areas and replacing with patching mortar. Finish repaired areas to blend into adjacent concrete.
4. Repair defective areas, except random cracks and single holes 1 inch or less in diameter, by cutting out and replacing with fresh concrete. Remove defective areas with clean, square cuts and expose steel reinforcement with at least a 3/4-inch clearance all around. Dampen concrete surfaces in contact with patching concrete and apply bonding agent. Mix patching concrete of same materials and mixture as original concrete except without coarse aggregate. Place, compact, and finish to blend with adjacent finished concrete. Cure in same manner as adjacent concrete.
5. Repair random cracks and single holes 1 inch or less in diameter with patching mortar. Groove top of cracks and cut out holes to sound concrete and clean off dust, dirt, and loose particles. Dampen cleaned concrete surfaces and apply bonding agent. Place patching mortar before bonding agent has dried. Compact patching mortar and finish to match adjacent concrete. Keep patched area continuously moist for at least 72 hours.

E. Perform structural repairs of concrete, subject to Architect's approval, using epoxy adhesive and patching mortar.

F. Repair materials and installation not specified above may be used, subject to Architect's approval.

3.14 FIELD QUALITY CONTROL

A. Testing and Inspecting: Owner will engage a special inspector and qualified testing and inspecting agency to perform field tests and inspections and prepare test reports.

B. Concrete Tests: Testing of composite samples of fresh concrete obtained according to ASTM C 172 shall be performed according to the following requirements:

1. Testing Frequency: Obtain one composite sample for each day's pour of each concrete mixture exceeding 5 cu. yd., but less than 25 cu. yd., plus one set for each additional 50 cu. yd. or fraction thereof.
2. Testing Frequency: Obtain at least one composite sample for each 100 cu. yd. or fraction thereof of each concrete mixture placed each day.

    a. When frequency of testing will provide fewer than five compressive-strength tests for each concrete mixture, testing shall be conducted from at least five randomly selected batches or from each batch if fewer than five are used.

3. Slump: ASTM C 143/C 143M; one test at point of placement for each composite sample, but not less than one test for each day's pour of each concrete mixture. Perform additional tests when concrete consistency appears to change.
4. Air Content: ASTM C 231, pressure method, for normal-weight concrete;one test for each composite sample, but not less than one test for each day's pour of each concrete mixture.
5. Concrete Temperature: ASTM C 1064/C 1064M; one test hourly when air temperature is 40 deg F and below and when 80 deg F and above, and one test for each composite sample.
6. Compression Test Specimens: ASTM C 31/C 31M.

    a. Cast and laboratory cure two sets of two standard cylinder specimens for each composite sample.
    b. Cast and field cure one set of two standard cylinder specimens for each composite sample.

7. Compressive-Strength Tests: ASTM C 39/C 39M; test one set of two laboratory-cured specimens at 7 days and one set of two specimens at 28 days.

    a. Test one set of two field-cured specimens at 7 days and one set of two specimens at 28 days.
    b. A compressive-strength test shall be the average compressive strength from a set of two specimens obtained from same composite sample and tested at age indicated.

8. When strength of field-cured cylinders is less than 85 percent of companion laboratory-cured cylinders, Contractor shall evaluate operations and provide corrective procedures for protecting and curing in-place concrete.

9. Strength of each concrete mixture will be satisfactory if every average of any three consecutive compressive-strength tests equals or exceeds specified compressive strength and no compressive-strength test value falls below specified compressive strength by more than 500 psi.
10. Test results shall be reported in writing to Architect, concrete manufacturer, and Contractor within 48 hours of testing. Reports of compressive-strength tests shall contain Project identification name and number, date of concrete placement, name of concrete testing and inspecting agency, location of concrete batch in Work, design compressive strength at 28 days, concrete mixture proportions and materials, compressive breaking strength, and type of break for both 7- and 28-day tests.
11. Nondestructive Testing: Impact hammer, sonoscope, or other nondestructive device may be permitted by Architect but will not be used as sole basis for approval or rejection of concrete.
12. Additional Tests: Testing and inspecting agency shall make additional tests of concrete when test results indicate that slump, air entrainment, compressive strengths, or other requirements have not been met, as directed by Architect. Testing and inspecting agency may conduct tests to determine adequacy of concrete by cored cylinders complying with ASTM C 42/C 42M or by other methods as directed by Architect.
13. Additional testing and inspecting, at Contractor's expense, will be performed to determine compliance of replaced or additional work with specified requirements.
14. Correct deficiencies in the Work that test reports and inspections indicate dos not comply with the Contract Documents.

C. Measure floor and slab flatness and levelness according to ASTM E 1155 within 48 hours of finishing.

END OF SECTION 03300

SECTION 03542
HYDRAULIC-CEMENT-BASED UNDERLAYMENT

PART 1 - GENERAL

1.1 RELATED DOCUMENTS

A. Drawings and general provisions of the Contract, including General and Supplementary Conditions and Division 1 Specification Sections, apply to this Section.

1.2 SUMMARY

A. This Section includes hydraulic-cement-based underlayment for use below interior floor coverings.

B. Related Sections include the following:

1. Division 9 Sections for patching and leveling compounds applied with floor coverings.

1.3 SUBMITTALS

A. Product Data: For each type of product indicated.

B. Manufacturer Certificates: Signed by manufacturers of both underlayment and floor covering system certifying that products are compatible.

C. Qualification Data: For Installer.

D. Minutes of preinstallation conference.

1.4 QUALITY ASSURANCE

A. Installer Qualifications: Installer who is approved by manufacturer for application of underlayment products required for this Project.

B. Product Compatibility: Manufacturers of both underlayment and floor covering system certify in writing that products are compatible.

C. Mockups: Apply hydraulic-cement-based underlayment mockups to demonstrate surface finish, bonding, texture, tolerances, and standard of workmanship.

1. Apply mockups approximately 100 sq. ft. in area in location indicated or, if not indicated, as directed by Architect.
2. Approved mockups may become part of the completed Work if undisturbed at time of Substantial Completion.

D. Preinstallation Conference: Conduct conference at Project site to comply with requirements in Division 1 Section "Project Management and Coordination."

1.5 DELIVERY, STORAGE, AND HANDLING

A. Store materials to comply with manufacturer's written instructions to prevent deterioration from moisture or other detrimental effects.

1.6 PROJECT CONDITIONS

A. Environmental Limitations: Comply with manufacturer's written instructions for substrate temperature, ambient temperature and humidity, ventilation, and other conditions affecting underlayment performance.

1. Place hydraulic-cement-based underlayments only when ambient temperature and temperature of substrates are between 50 and 80 deg F.

1.7 COORDINATION

A. Coordinate application of underlayment with requirements of floor covering products, including adhesives, specified in Division 9 Sections, to ensure compatibility of products.

PART 2 - PRODUCTS

2.1 HYDRAULIC-CEMENT-BASED UNDERLAYMENTS

A. Underlayment: Hydraulic-cement-based, polymer-modified, self-leveling product that can be applied in minimum uniform thicknesses of 1/8 inch and that can be feathered at edges to match adjacent floor elevations.

1. Products: Subject to compliance with requirements, provide one of the following:

a. Ardex; K-15 Self-Leveling Underlayment Concrete.
b. Bonsal, W. R. Company; Self-Leveling Underlayment.
c. ChemRex; MBT Mastertop 110 Plus Underlayment, Sonneborn Sonocrete Sonoflow, Thoro Underlayment, Self-Leveling.
d. Conspec, a Dayton Superior Company; Conflow.
e. Dayton Superior Corporation; LeveLayer I.
f. Dependable Chemical Co., Inc.; Skimflow ES.
g. L&M Construction Chemicals, Inc.; Levelex.
h. MAPEI Corporation; Ultraplan 1.
i. Maxxon Corporation; Level-Right.

j. US Mix Products Company; US SPEC Self - Leveling Underlayment.

2. Cement Binder: ASTM C 150, portland cement, or hydraulic or blended hydraulic cement as defined by ASTM C 219.
3. Compressive Strength: Not less than 4100 psi at 28 days when tested according to ASTM C 109/C 109M.
4. Underlayment Additive: Resilient-emulsion product of underlayment manufacturer formulated for use with underlayment when applied to substrate and conditions indicated.

B. Aggregate: Well-graded, washed gravel, 1/8 to 1/4 inch; or coarse sand as recommended by underlayment manufacturer.

1. Provide aggregate when recommended in writing by underlayment manufacturer for underlayment thickness required.

C. Water: Potable and at a temperature of not more than 70 deg F.

D. Reinforcement: For underlayment applied to wood substrates, provide galvanized metal lath or other corrosion-resistant reinforcement recommended in writing by underlayment manufacturer.

E. Primer: Product of underlayment manufacturer recommended in writing for substrate, conditions, and application indicated.

F. Corrosion-Resistant Coating: Recommended in writing by underlayment manufacturer for metal substrates.

PART 3 - EXECUTION

3.1 EXAMINATION

A. Examine substrates, with Installer present, for conditions affecting performance.

1. Proceed with application only after unsatisfactory conditions have been corrected.

3.2 PREPARATION

A. General: Prepare and clean substrate according to manufacturer's written instructions.

1. Treat nonmoving substrate cracks according to manufacturer's written instructions to prevent cracks from telegraphing (reflecting) through underlayment.
2. Fill substrate voids to prevent underlayment from leaking.

B. Concrete Substrates: Mechanically remove, according to manufacturer's written instructions, laitance, glaze, efflorescence, curing compounds, form-release agents, dust, dirt, grease, oil, and other contaminants that might impair underlayment bond.

1. Moisture Testing: Perform anhydrous calcium chloride test, ASTM F 1869. Proceed with installation only after substrates do not exceed a maximum moisture-vapor-emission rate of 3 lb of water/1000 sq. ft. in 24 hours.

C. Adhesion Tests: After substrate preparation, test substrate for adhesion with underlayment according to manufacturer's written instructions.

3.3 APPLICATION

A. General: Mix and apply underlayment components according to manufacturer's written instructions.

1. Close areas to traffic during underlayment application and for time period after application recommended in writing by manufacturer.
2. Coordinate application of components to provide optimum underlayment-to-substrate and intercoat adhesion.
3. At substrate expansion, isolation, and other moving joints, allow joint of same width to continue through underlayment.

B. Apply primer over prepared substrate at manufacturer's recommended spreading rate.

C. Apply underlayment to produce uniform, level surface.

1. Apply a final layer without aggregate to produce surface.
2. Feather edges to match adjacent floor elevations.

D. Cure underlayment according to manufacturer's written instructions. Prevent contamination during application and curing processes.

E. Do not install floor coverings over underlayment until after time period recommended in writing by underlayment manufacturer.

F. Remove and replace underlayment areas that evidence lack of bond with substrate, including areas that emit a "hollow" sound when tapped.

3.4 PROTECTION

A. Protect underlayment from concentrated and rolling loads for remainder of construction period.

END OF SECTION 03542

SECTION 04720
CAST STONE

PART 1 - GENERAL

1.1 RELATED DOCUMENTS

A. Drawings and general provisions of the Contract, including General and Supplementary Conditions and Division 1 Specification Sections, apply to this Section.

1.2 SUMMARY

A. This Section includes the following:

1. Cast stone trim including the following:

a. Window sills.

B. Related Sections include the following:

1. Division 3 Section "Plant-Precast Architectural Concrete."
2. Division 4 Section "Unit Masonry Assemblies" for installing cast stone units in unit masonry.

1.3 DEFINITIONS

A. Cast Stone: Architectural precast concrete building units intended to simulate natural cut stone.

1.4 SUBMITTALS

A. Product Data: Include construction details, material descriptions, dimensions of individual components and profiles, and finishes for cast stone units.

B. Shop Drawings: Show fabrication and installation details for cast stone units. Include dimensions, details of reinforcement and anchorages if any, and indication of finished faces.

1. Include building elevations showing layout of units and locations of joints and anchors.

C. Samples for Verification:

1. For each color and texture of cast stone required, 10 inches square in size.

D. Material Test Reports: For each mix required to produce cast stone, based on testing according to ASTM C 1364, including test for resistance to freezing and thawing.

1. Provide test reports based on testing within previous two years.

1.5 QUALITY ASSURANCE

A. Manufacturer Qualifications: A qualified manufacturer of cast stone units similar to those indicated for this Project, with sufficient production capacity to manufacture required units.

1. Manufacturer is a producing member of the Cast Stone Institute or has on file and follows a written quality-control plan approved by Architect that includes all elements of the Cast Stone Institute's "Quality Control Procedures Required for Plant Inspection."

B. Source Limitations for Cast Stone: Obtain cast stone units through one source from a single manufacturer.

1.6 DELIVERY, STORAGE, AND HANDLING

A. Coordinate delivery of cast stone with unit masonry work to minimize the need for on-site storage and to avoid delaying the Work.

B. Pack, handle, and ship cast stone units in suitable packs or pallets.

1. Lift with wide-belt slings; do not use wire rope or ropes that might cause staining. Move cast stone units, if required, using dollies with wood supports.
2. Store cast stone units on wood skids or pallets with nonstaining, waterproof covers. Arrange to distribute weight evenly and to prevent damage to units. Ventilate under covers to prevent condensation.

C. Store installation materials on elevated platforms, under cover, and in a dry location.

1.7 PROJECT CONDITIONS

A. Cold-Weather Requirements: Do not use frozen materials or materials mixed or coated with ice or frost. Do not build on frozen substrates. Comply with cold-weather construction requirements contained in ACI 530.1/ASCE 6/TMS 602.

1. Cold-Weather Cleaning: Use liquid cleaning methods only when air temperature is 40 deg F and above and will remain so until cast stone has dried, but not less than 7 days after completing cleaning.

B. Hot-Weather Requirements: Comply with hot-weather construction requirements contained in ACI 530.1/ASCE 6/TMS 602.

PART 2 - PRODUCTS

2.1 CAST STONE UNITS

A. Provide cast stone units complying with ASTM C 1364 using the vibrant dry tamp or wet-cast method.

1. Provide units that are resistant to freezing and thawing as determined by laboratory testing according to ASTM C 666, Procedure A, as modified by ASTM C 1364.

B. Fabricate units with sharp arris and details accurately reproduced with indicated texture on all exposed surfaces, unless otherwise indicated.

1. Slope exposed horizontal surfaces 1:12, unless otherwise indicated.
2. Provide raised fillets at backs of sills and at ends indicated to be built into jambs.
3. Provide drips on projecting elements, unless otherwise indicated.

C. Fabrication Tolerances:

1. Variation in Cross Section: Do not vary from indicated dimensions by more than 1/8 inch.
2. Variation in Length: Do not vary from indicated dimensions by more than 1/360 of the length of unit or 1/8 inch, whichever is greater, but in no case by more than 1/4 inch.
3. Warp, Bow, and Twist: Not to exceed 1/360 of the length of unit or 1/8 inch, whichever is greater.
4. Location of Grooves, False Joints, Holes, Anchorages, and Similar Features: Do not vary from indicated position by more than 1/8 inch on formed surfaces of units and 3/8 inch on unformed surfaces.

D. Cure units by one of the following methods:

1. Cure units with steam in enclosed curing room at temperature of 105 deg F or above and 95 to 100 percent relative humidity for 6 hours.
2. Cure units with dense fog and water spray in enclosed warm curing room at 95 to 100 percent relative humidity for 24 hours.

E. Acid etch units after curing to remove cement film from surfaces to be exposed to view.

F. Colors and Textures: Match existing units.

2.2 ACCESSORIES

A. Anchors: Type and size indicated, fabricated from steel complying with ASTM A 36/A 36M, and hot-dip galvanized to comply with ASTM A 123/A 123M.

B. Dowels: Round steel bars complying with ASTM A 36/A 36M or ASTM A 615/A 615M, 1/2-inch diameter, and hot-dip galvanized to comply with ASTM A 123/A 123M.

C. Proprietary Acidic Cleaner: Manufacturer's standard-strength, general-purpose cleaner designed for removing mortar/grout stains, efflorescence, and other construction stains from new masonry surfaces without discoloring or damaging masonry surfaces; expressly approved for intended use by cast stone manufacturer and expressly approved by cleaner manufacturer for use on cast stone and adjacent masonry materials.

2.3 SOURCE QUALITY CONTROL

A. Employ an independent testing agency to sample and test cast stone units according to ASTM C 1364.

1. Include one test for resistance to freezing and thawing.

PART 3 - EXECUTION

3.1 EXAMINATION

A. Examine substrates and conditions, with Installer present, for compliance with requirements for installation tolerances and other conditions affecting performance of cast stone.

1. Proceed with installation only after unsatisfactory conditions have been corrected.

3.2 SETTING ANCHORED CAST STONE WITH SEALANT-FILLED JOINTS

A. Set cast stone as indicated on Drawings. Set units accurately in locations indicated with edges and faces aligned according to established relationships and indicated tolerances.

1. Install anchors, supports, fasteners, and other attachments indicated or necessary to secure units in place.
2. Shim and adjust anchors, supports, and accessories to set cast stone in locations indicated with uniform joints.

B. Keep cavities open where unfilled space is indicated between back of cast stone units and backup wall; do not fill cavities with mortar or grout.

C. Fill anchor holes with sealant.

1. Where dowel holes occur at pressure-relieving joints, provide compressible material at ends of dowels.

D. Set cast stone supported on clip or continuous angles on resilient setting shims. Use material of thickness required to maintain uniform joint widths. Hold shims back from face of cast stone a distance at least equal to width of joint.

E. Keep joints free of mortar and other rigid materials. Remove temporary shims and spacers from joints after anchors and supports are secured in place and cast stone units are anchored. Do not begin sealant installation until temporary shims and spacers are removed.

1. Form open joint of width indicated, but not less than 3/8 inch.

F. Prepare joints and apply sealant of type and at locations indicated to comply with applicable requirements in Division 7 Section "Joint Sealants."

1. Prime cast stone surfaces to receive sealant and install compressible backer rod in joints before applying sealant, unless otherwise indicated.

3.3 INSTALLATION TOLERANCES

A. Variation from Plumb: Do not exceed 1/8 inch in 10 feet, 1/4 inch in 20 feet, or 1/2 inch maximum.

B. Variation from Level: Do not exceed 1/8 inch in 10 feet, 1/4 inch in 20 feet, or 1/2 inch maximum.

C. Variation in Joint Width: Do not vary joint thickness more than 1/8 inch in 36 inches or one-fourth of nominal joint width, whichever is less.

D. Variation in Plane between Adjacent Surfaces (Lipping): Do not vary from flush alignment with adjacent units or adjacent surfaces indicated to be flush with units by more than 1/16 inch, except due to warpage of units within tolerances specified.

3.4 ADJUSTING AND CLEANING

A. Remove and replace stained and otherwise damaged units and units not matching approved Samples. Cast stone may be repaired if methods and results are approved by Architect.

B. Replace units in a manner that results in cast stone matching approved Samples, complying with other requirements, and showing no evidence of replacement.

C. In-Progress Cleaning: Clean cast stone as work progresses.

1. Remove mortar fins and smears before tooling joints.
2. Remove excess sealant immediately, including spills, smears, and spatter.

D. Final Cleaning: After mortar is thoroughly set and cured, clean exposed cast stone as follows:

1. Remove large mortar particles by hand with wooden paddles and nonmetallic scrape hoes or chisels.
2. Test cleaning methods on sample; leave one sample uncleaned for comparison purposes. Obtain Architect's approval of sample cleaning before proceeding with cleaning of cast stone.
3. Protect adjacent surfaces from contact with cleaner by covering them with liquid strippable masking agent or polyethylene film and waterproof masking tape.
4. Wet surfaces with water before applying cleaners; remove cleaners promptly by rinsing thoroughly with clear water.
5. Clean cast stone by bucket-and-brush hand-cleaning method described in BIA Technical Notes No. 20.

6. Clean cast stone with proprietary acidic cleaner applied according to manufacturer's written instructions.

END OF SECTION 04720

SECTION 04810
UNIT MASONRY ASSEMBLIES

PART 1 - GENERAL

1.1 RELATED DOCUMENTS

A. Drawings and general provisions of the Contract, including General and Supplementary Conditions and Division 1 Specification Sections, apply to this Section.

1.2 SUMMARY

A. This Section includes unit masonry assemblies consisting of the following:

1. Concrete masonry units (CMUs).
2. Face brick.
3. Structural-clay facing tile.
4. Mortar and grout.
5. Reinforcing steel.
6. Masonry joint reinforcement.
7. Ties and anchors.
8. Embedded flashing.
9. Miscellaneous masonry accessories.
10. Cavity-wall insulation.

B. Related Sections include the following:

1. Division 7 Section "Sheet Metal Flashing and Trim" for exposed sheet metal flashing.
2. Division 7 Section "Through-Penetration Firestop Systems" for firestopping at openings in masonry walls.
3. Division 7 Section "Fire-Resistive Joint Systems" for fire-resistive joint systems at heads of masonry walls.
4. Division 7 Section "Joint Sealants" for sealing control and expansion joints in unit masonry.

C. Products furnished, but not installed, under this Section include the following:

1. Anchor sections of adjustable masonry anchors for connecting to structural frame, installed under Division 5 Section "Structural Steel."

D. Products installed, but not furnished, under this Section include the following:

1. Steel lintels and shelf angles for unit masonry, furnished under Division 5 Section "Metal Fabrications."
2. Manufactured reglets in masonry joints for metal flashing, furnished under Division 7 Section "Sheet Metal Flashing and Trim."
3. Stone wall panels, furnished under Division 4 Section "Dimensional Stone Cladding".

1.3 DEFINITIONS

A. Reinforced Masonry: Masonry containing reinforcing steel in grouted cells.

1.4 PERFORMANCE REQUIREMENTS

A. Provide structural unit masonry that develops indicated net-area compressive strengths (f'_m) at 28 days.

B. Determine net-area compressive strength (f'_m) of masonry from average net-area compressive strengths of masonry units and mortar types (unit-strength method) according to Tables 1 and 2 in ACI 530.1/ASCE 6/TMS 602.

1.5 SUBMITTALS

A. Product Data: For each type of product indicated.

B. Samples for Initial Selection: For the following:

1. Colored mortar.

C. Samples for Verification: For each type and color of the following:

1. Face brick, in the form of straps of five or more bricks.
2. Glazed structural-clay facing tile.
3. Special brick shapes.
4. Pigmented mortar. Make Samples using same sand and mortar ingredients to be used on Project. Label Samples to indicate types and amounts of pigments used.
5. Weep holes/vents.
6. Accessories embedded in masonry.

D. List of Materials Used in Constructing Mockups: List generic product names together with manufacturers, manufacturers' product names, model numbers, lot numbers, batch numbers, source of supply, and other information as required to identify materials used. Include mix proportions for mortar and grout and source of aggregates.

1. Submittal is for information only. Neither receipt of list nor approval of mockup constitutes approval of deviations from the Contract Documents unless such deviations are specifically brought to the attention of Architect and approved in writing.

E. Qualification Data: For testing agency.

F. Material Certificates: Include statements of material properties indicating compliance with requirements including compliance with standards and type designations within standards. Provide for each type and size of the following:

1. Masonry units.

   a. Include material test reports substantiating compliance with requirements.
   b. For bricks, include size-variation data verifying that actual range of sizes falls within specified tolerances.
   c. For exposed brick, include material test report for efflorescence according to ASTM C 67.
   d. For masonry units used in structural masonry, include data and calculations establishing average net-area compressive strength of units.

2. Cementitious materials. Include brand, type, and name of manufacturer.
3. Preblended, dry mortar mixes. Include description of type and proportions of ingredients.
4. Grout mixes. Include description of type and proportions of ingredients.
5. Reinforcing bars.
6. Joint reinforcement.
7. Anchors, ties, and metal accessories.

G. Mix Designs: For each type of mortar and grout. Include description of type and proportions of ingredients.

1. Include test reports, per ASTM C 780, for mortar mixes required to comply with property specification.
2. Include test reports, per ASTM C 1019, for grout mixes required to comply with compressive strength requirement.

H. Statement of Compressive Strength of Masonry: For each combination of masonry unit type and mortar type, provide statement of average net-area compressive strength of masonry units, mortar type, and resulting net-area compressive strength of masonry determined according to Tables 1 and 2 in ACI 530.1/ASCE 6/TMS 602.

I. Cold-Weather Procedures: Detailed description of methods, materials, and equipment to be used to comply with cold-weather requirements.

1.6 QUALITY ASSURANCE

A. Testing Agency Qualifications: An independent agency qualified according to ASTM C 1093 for testing indicated, as documented according to ASTM E 548.

B. Source Limitations for Mortar Materials: Obtain mortar ingredients of a uniform quality, including color for exposed masonry, from a single manufacturer for each cementitious component and from one source or producer for each aggregate.

C. Preconstruction Testing Service: Owner will engage a qualified independent testing agency to perform preconstruction testing indicated below. Payment for these services will be made by Owner. Retesting of materials that fail to meet specified requirements shall be done at Contractor's expense.

1. Clay Masonry Unit Test: For each type of unit required, per ASTM C 67.
2. Concrete Masonry Unit Test: For each type of unit required, per ASTM C 140.
3. Mortar Test (Property Specification): For each mix required, per ASTM C 780.
4. Grout Test (Compressive Strength): For each mix required, per ASTM C 1019.
5. Prism Test: For each type of construction required, per ASTM C 1314.

D. Fire-Resistance Ratings: Where indicated, provide materials and construction identical to those of assemblies with fire-resistance ratings determined per ASTM E 119 by a testing and inspecting agency, by equivalent concrete masonry thickness, or by other means, as acceptable to authorities having jurisdiction.

E. Mockups: Build mockups to verify selections made under sample submittals and to demonstrate aesthetic effects and set quality standards for materials and execution.

1. Build mockup of typical wall area as shown on Drawings.
2. Build mockups for typical exterior wall in sizes approximately 48 inches long by 72 inches high by full thickness, including face and backup wythes and accessories.

    a. Include a sealant-filled joint at least 16 inches long in exterior wall mockup.

3. Where masonry is to match existing, erect mockups adjacent and parallel to existing surface.
4. Clean one-half of exposed faces of mockups with masonry cleaner as indicated.
5. Protect accepted mockups from the elements with weather-resistant membrane.
6. Approval of mockups is for color, texture, and blending of masonry units; relationship of mortar and sealant colors to masonry unit colors; tooling of joints; and aesthetic qualities of workmanship.

    a. Approval of mockups is also for other material and construction qualities specifically approved by Architect in writing.
    b. Approval of mockups does not constitute approval of deviations from the Contract Documents contained in mockups unless such deviations are specifically approved by Architect in writing.

7. Approved mockups may become part of the completed Work if undisturbed at time of Substantial Completion.

F. Preinstallation Conference: Conduct conference at Project site to comply with requirements in Division 1 Section "Project Management and Coordination."

1.7 DELIVERY, STORAGE, AND HANDLING

A. Store masonry units on elevated platforms in a dry location. If units are not stored in an enclosed location, cover tops and sides of stacks with waterproof sheeting, securely tied. If units become wet, do not install until they are dry.

B. Store cementitious materials on elevated platforms, under cover, and in a dry location. Do not use cementitious materials that have become damp.

C. Store aggregates where grading and other required characteristics can be maintained and contamination avoided.

D. Deliver preblended, dry mortar mix in moisture-resistant containers designed for lifting and emptying into dispensing silo. Store preblended, dry mortar mix in delivery containers on elevated platforms, under cover, and in a dry location or in a metal dispensing silo with weatherproof cover.

E. Store masonry accessories, including metal items, to prevent corrosion and accumulation of dirt and oil.

1.8 PROJECT CONDITIONS

A. Protection of Masonry: During construction, cover tops of walls, projections, and sills with waterproof sheeting at end of each day's work. Cover partially completed masonry when construction is not in progress.

1. Extend cover a minimum of 24 inches down both sides and hold cover securely in place.
2. Where 1 wythe of multiwythe masonry walls is completed in advance of other wythes, secure cover a minimum of 24 inches down face next to unconstructed wythe and hold cover in place.

B. Do not apply uniform floor or roof loads for at least 12 hours and concentrated loads for at least 3 days after building masonry walls or columns.

C. Stain Prevention: Prevent grout, mortar, and soil from staining the face of masonry to be left exposed or painted. Immediately remove grout, mortar, and soil that come in contact with such masonry.

1. Protect base of walls from rain-splashed mud and from mortar splatter by spreading coverings on ground and over wall surface.
2. Protect sills, ledges, and projections from mortar droppings.
3. Protect surfaces of window and door frames, as well as similar products with painted and integral finishes, from mortar droppings.
4. Turn scaffold boards near the wall on edge at the end of each day to prevent rain from splashing mortar and dirt onto completed masonry.

D. Cold-Weather Requirements: Do not use frozen materials or materials mixed or coated with ice or frost. Do not build on frozen substrates. Remove and replace unit masonry damaged by frost or by freezing conditions. Comply with cold-weather construction requirements contained in ACI 530.1/ASCE 6/TMS 602.

1. Cold-Weather Cleaning: Use liquid cleaning methods only when air temperature is 40 deg F and above and will remain so until masonry has dried, but not less than 7 days after completing cleaning.

E. Hot-Weather Requirements: Comply with hot-weather construction requirements contained in ACI 530.1/ASCE 6/TMS 602.

PART 2 - PRODUCTS

2.1 MANUFACTURERS

A. In other Part 2 articles where titles below introduce lists, the following requirements apply to product selection:

1. Products: Subject to compliance with requirements, provide one of the products specified.
2. Manufacturers: Subject to compliance with requirements, provide products by one of the manufacturers specified.

2.2 MASONRY UNITS, GENERAL

A. Defective Units: Referenced masonry unit standards may allow a certain percentage of units to exceed tolerances and to contain chips, cracks, or other defects exceeding limits stated in the standard. Do not uses units where such defects, including dimensions that vary from specified dimensions by more than stated tolerances, will be exposed in the completed Work or will impair the quality of completed masonry.

2.3 CONCRETE MASONRY UNITS (CMUs)

A. Shapes: Provide shapes indicated and as follows:

1. Provide special shapes for lintels, corners, jambs, sashes, movement joints, headers, bonding, and other special conditions.
2. Provide bullnose units for outside corners, unless otherwise indicated.

B. Concrete Masonry Units: ASTM C 90.

1. Unit Compressive Strength: Provide units with minimum average net-area compressive strength of 1900 psi.
2. Weight Classification: Medium weight or Normal weight.
3. Size (Width): Manufactured to dimensions 3/8 inch less than nominal dimensions.
4. Exposed Faces: Provide color and texture matching the range represented by Architect's sample.

2.4 BRICK

A. General: Provide shapes indicated and as follows:

1. For ends of sills and caps and for similar applications that would otherwise expose unfinished brick surfaces, provide units without cores or frogs and with exposed surfaces finished.
2. Provide special shapes for applications where stretcher units cannot accommodate special conditions, including those at corners, movement joints, bond beams, sashes, and lintels.
3. Provide special shapes for applications requiring brick of size, form, color, and texture on exposed surfaces that cannot be produced by sawing.

4. Provide special shapes for applications where shapes produced by sawing would result in sawed surfaces being exposed to view.

B. Face Brick: ASTM C 216, Grade SW Type FBS.

1. Unit Compressive Strength: Provide units with minimum average net-area compressive strength of 3000 psi.
2. Initial Rate of Absorption: Less than 30 g/30 sq. in. per minute when tested per ASTM C 67.
3. Efflorescence: Provide brick that has been tested according to ASTM C 67 and is rated "not effloresced."
4. Application: Use where brick is exposed, unless otherwise indicated.
5. Provide face brick matching color range, texture, and size of existing adjacent brickwork.

    a. Smith - Streator Brick Dark Mingled Clay Tex, Matte Texture

2.5 STRUCTURAL-CLAY FACING TILE

A. General:

1. Provide solid, multicored, or hollow units, with shape and direction of cores optional, unless otherwise indicated.
2. Provide special shapes where required for corners, jambs, coved bases, sills, and other special conditions indicated, including applications that cannot be produced by sawing standard units.

    a. Provide bullnose units for outside corners, unless otherwise indicated.
    b. Provide coved internal corners.

B. Glazed Structural-Clay Facing Tile: ASTM C 126, Grade S (Select).

1. Sizes: Match existing Smith 3 ¾" base course.
2. Provide Type I (single-faced units) where only one finished face is exposed when units are installed.
3. Provide special units glazed on ends and tops, as well as faces for corners, jambs, sills, pilasters, columns, and other applications indicated, where glazed units are exposed on other surfaces and faces.
4. Colors and Patterns: Match existing base units.

2.6 MORTAR AND GROUT MATERIALS

A. Portland Cement: ASTM C 150, Type I or II, except Type III may be used for cold-weather construction. Provide natural color or white cement as required to produce mortar color indicated.

B. Hydrated Lime: ASTM C 207, Type S.

C. Portland Cement-Lime Mix: Packaged blend of portland cement complying with ASTM C 150, Type I or Type III, and hydrated lime complying with ASTM C 207, Type S.

D. Mortar Pigments: Natural and synthetic iron oxides and chromium oxides, compounded for use in mortar mixes. Use only pigments with a record of satisfactory performance in masonry mortar.

1. Products:

a. Bayer Corporation, Industrial Chemicals Div.; Bayferrox Iron Oxide Pigments.
b. Davis Colors; True Tone Mortar Colors.
c. Solomon Grind-Chem Services, Inc.; SGS Mortar Colors.

E. Colored Cement Product: Packaged blend made from portland cement and lime and mortar pigments, all complying with specified requirements, and containing no other ingredients.

1. Formulate blend as required to produce color indicated or, if not indicated, as selected from manufacturer's standard colors.
2. Pigments shall not exceed 10 percent of portland cement by weight.
3. Available Products:

a. Colored Portland Cement-Lime Mix:

1) Capital Materials Corporation; Riverton Portland Cement Lime Custom Color.
2) Holcim (US) Inc.; Rainbow Mortamix Custom Color Cement/Lime.
3) Lafarge North America Inc.; Eaglebond.
4) Lehigh Cement Company; Lehigh Custom Color Portland/Lime Cement.

F. Aggregate for Mortar: ASTM C 144.

1. For mortar that is exposed to view, use washed aggregate consisting of natural sand or crushed stone.
2. For joints less than 1/4 inch thick, use aggregate graded with 100 percent passing the No. 16 sieve.
3. Colored-Mortar Aggregates: Natural sand or crushed stone of color necessary to produce required mortar color.

G. Aggregate for Grout: ASTM C 404.

H. Cold-Weather Admixture: Nonchloride, noncorrosive, accelerating admixture complying with ASTM C 494/C 494M, Type C, and recommended by manufacturer for use in masonry mortar of composition indicated.

1. Products:

a. Addiment Incorporated; Mortar Kick.
b. Euclid Chemical Company (The); Accelguard 80.
c. Grace Construction Products, a unit of W. R. Grace & Co. - Conn.; Morset.
d. Sonneborn, Div. of ChemRex; Trimix-NCA.

I. Water: Potable.

2.7 REINFORCEMENT

A. Uncoated Steel Reinforcing Bars: ASTM A 615/A 615M or ASTM A 996/A 996M, Grade 60.

B. Masonry Joint Reinforcement, General: ASTM A 951.

1. Interior Walls: Hot-dip galvanized, carbon steel.
2. Exterior Walls: Hot-dip galvanized, carbon steel.
3. Wire Size for Side Rods: W1.7 or 0.148-inch diameter.
4. Wire Size for Cross Rods: W1.7 or 0.148-inch diameter.
5. Wire Size for Veneer Ties: W2.8 or 0.188-inch diameter.
6. Spacing of Cross Rods, Tabs, and Cross Ties: Not more than 16 inches o.c.
7. Provide in lengths of not less than 10 feet , with prefabricated corner and tee units.

C. Masonry Joint Reinforcement for Single-Wythe Masonry: Either ladder or truss type with single pair of side rods.

D. Masonry Joint Reinforcement for Multiwythe Masonry:

1. Adjustable (two-piece) type, either ladder or truss design, with one side rod at each face shell of backing wythe and with separate ties that extend into facing wythe. Ties have two hooks that engage eyes or slots in reinforcement and resist movement perpendicular to wall. Ties extend at least halfway through facing wythe but with at least 5/8-inch cover on outside face.

2.8 TIES AND ANCHORS

A. Materials: Provide ties and anchors specified in subsequent paragraphs that are made from materials that comply with eight subparagraphs below, unless otherwise indicated.

1. Hot-Dip Galvanized, Carbon-Steel Wire: ASTM A 82; with ASTM A 153/A 153M, Class B-2 coating.
2. Steel Sheet, Galvanized after Fabrication: ASTM A 1008/A 1008M, Commercial Steel, hot-dip galvanized after fabrication to comply with ASTM A 153/A 153M.
3. Steel Plates, Shapes, and Bars: ASTM A 36/A 36M.

B. Wire Ties, General: Unless otherwise indicated, size wire ties to extend at least halfway through veneer but with at least 5/8-inch cover on outside face. Outer ends of wires are bent 90 degrees and extend 2 inches parallel to face of veneer.

C. Individual Wire Ties: Rectangular units with closed ends and not less than 4 inches wide.

1. Z-shaped ties with ends bent 90 degrees to provide hooks not less than 2 inches long may be used for masonry constructed from solid units or hollow units laid with cells horizontal.
2. Where wythes are of different materials, use adjustable ties with pintle-and-eye connections having a maximum adjustment of 1-1/4 inches.
3. Wire: Fabricate from 3/16-inch- diameter, hot-dip galvanized steel wire.

D. Adjustable Anchors for Connecting to Structure: Provide anchors that allow vertical or horizontal adjustment but resist tension and compression forces perpendicular to plane of wall.

1. Anchor Section for Welding to Steel Frame: Crimped 1/4-inch- diameter, hot-dip galvanized steel wire.
2. Tie Section for Steel Frame: Triangular-shaped wire tie, sized to extend within 1 inch of masonry face, made from 0.188-inch- diameter, hot-dip galvanized steel wire.

E. Partition Top anchors: 0.097-inch- thick metal plate with 3/8-inch- diameter metal rod 6 inches long welded to plate and with closed-end plastic tube fitted over rod that allows rod to move in and out of tube. Fabricate from steel, hot-dip galvanized after fabrication.

F. Rigid Anchors: Fabricate from steel bars 1-1/2 inches wide by 1/4 inch thick by 24 inches long, with ends turned up 2 inches or with cross pins, unless otherwise indicated.

1. Corrosion Protection: Hot-dip galvanized to comply with ASTM A 153/A 153M.

G. Adjustable Masonry-Veneer Anchors

1. General: Provide anchors that allow vertical adjustment but resist tension and compression forces perpendicular to plane of wall, for attachment over sheathing to wood or metal studs, and as follows:

   a. Structural Performance Characteristics: Capable of withstanding a 100-lbf load in both tension and compression without deforming or developing play in excess of 0.05 inch.

2. Contractor's Option: Unless otherwise indicated, provide any of the following types of anchors:
3. Screw-Attached, Masonry-Veneer Anchors: Units consisting of a wire tie and a metal anchor section.

   a. Anchor Section: Zinc-alloy barrel section with flanged head with eye and corrosion-resistant, self-drilling screw. Eye designed to receive wire tie and to serve as head for drilling fastener into framing. Barrel length to suit sheathing thickness, allowing screw to seat directly against framing with flanged head covering hole in sheathing.
   b. Wire Ties: Triangular-, rectangular-, or T-shaped wire ties fabricated from 0.188-inch-diameter, hot-dip galvanized steel wire.
   c. Available Products:

      1) Heckmann Building Products Inc.; Pos-I-Tie.

2.9 MISCELLANEOUS ANCHORS

A. Unit Type Inserts in Concrete: Cast-iron or malleable-iron wedge-type inserts.

B. Anchor Bolts: Headed steel bolts complying with ASTM A 307, Grade A; with ASTM A 563 hex nuts and, where indicated, flat washers; hot-dip galvanized to comply with ASTM A 153/A 153M, Class C; of dimensions indicated.

C. Postinstalled Anchors: Provide chemical or torque-controlled expansion anchors, with capability to sustain, without failure, a load equal to six times the load imposed when installed in solid or grouted unit masonry and equal to four times the load imposed when installed in concrete, as determined by testing per ASTM E 488 conducted by a qualified independent testing agency.

1. Corrosion Protection: Stainless-steel components complying with ASTM F 593 and ASTM F 594, Alloy Group 1 or 2 for bolts and nuts; ASTM A 666 or ASTM A 276, Type 304 or 316, for anchors.

2.10 EMBEDDED FLASHING MATERIALS

A. Metal Flashing: Provide metal flashing, where flashing is exposed or partly exposed and where indicated, complying with Division 7 Section "Sheet Metal Flashing and Trim" and as follows:

1. Stainless Steel: ASTM A 240/A 240M, Type 304, 0.016 inch thick.
2. Fabricate continuous flashings in sections 96 inches long minimum, but not exceeding 12 feet. Provide splice plates at joints of formed, smooth metal flashing.

    a. Products:

        1) Cheney Flashing Company.
        2) Keystone Flashing Company, Inc.; Keystone 3-Way Interlocking Thruwall Flashing.

3. Metal Drip Edges: Fabricate from stainless steel. Extend at least 3 inches into wall and 1/2 inch out from wall, with outer edge bent down 30 degrees and hemmed.
4. Metal Flashing Terminations: Fabricate from stainless steel. Extend at least 3 inches into wall and out to exterior face of wall. At exterior face of wall, bend metal back on itself for 3/4 inch and down into joint 3/8 inch to form a stop for retaining sealant backer rod.
5. Metal Expansion-Joint Strips: Fabricate from stainless steel to shapes indicated.

B. Flexible Flashing: For flashing not exposed to the exterior, use one of the following, unless otherwise indicated:

1. Copper-Laminated Flashing: 7-oz./sq. ft. copper sheet bonded with asphalt between 2 layers of glass-fiber cloth. Use only where flashing is fully concealed in masonry.

    a. Products:

        1) Advanced Building Products Inc.; Copper Fabric Flashing.
        2) AFCO Products Inc.; Copper Fabric.
        3) Hohmann & Barnard, Inc.; H & B C-Fab Flashing.
        4) Phoenix Building Products; Type FCC-Fabric Covered Copper.
        5) Polytite Manufacturing Corp.; Copper Fabric Flashing.
        6) Sandell Manufacturing Co., Inc.; Copper Fabric Flashing.
        7) York Manufacturing, Inc.; York Copper Fabric Flashing.

2. EPDM Flashing: Sheet flashing product made from ethylene-propylene-diene terpolymer, complying with ASTM D 4637, 0.040 inch thick.

a. Products:

1) Carlisle Coatings & Waterproofing; Pre-Kleened EPDM Thru-Wall Flashing.
2) Firestone Building Products; FlashGuard.
3) Heckmann Building Products Inc.; No. 81 EPDM Thru-Wall Flashing.

C. Solder and Sealants for Sheet Metal Flashings: As specified in Division 7 Section "Sheet Metal Flashing and Trim."

1. Solder for Stainless Steel: ASTM B 32, Grade Sn60, with acid flux of type recommended by stainless-steel sheet manufacturer.
2. Elastomeric Sealant: ASTM C 920, chemically curing silicone sealant; of type, grade, class, and use classifications required to seal joints in sheet metal flashing and trim and remain watertight.

D. Adhesives, Primers, and Seam Tapes for Flashings: Flashing manufacturer's standard products or products recommended by flashing manufacturer for bonding flashing sheets to each other and to substrates.

2.11 MISCELLANEOUS MASONRY ACCESSORIES

A. Compressible Filler: Premolded filler strips complying with ASTM D 1056, Grade 2A1; compressible up to 35 percent; of width and thickness indicated; formulated from neoprene.

B. Bond-Breaker Strips: Asphalt-saturated, organic roofing felt complying with ASTM D 226, Type I (No. 15 asphalt felt).

C. Weep/Vent Products: Use the following, unless otherwise indicated:

1. Cellular Plastic Weep/Vent: One-piece, flexible extrusion made from UV-resistant polypropylene copolymer, full height and width of head joint and depth 1/8 inch less than depth of outer wythe, in color selected from manufacturer's standard.

a. Products:

1) Advanced Building Products Inc.; Mortar Maze weep vent.
2) Dayton Superior Corporation, Dur-O-Wal Division; Cell Vents.
3) Heckmann Building Products Inc.; No. 85 Cell Vent.
4) Hohmann & Barnard, Inc.; Quadro-Vent.
5) Wire-Bond; Cell Vent.

D. Cavity Drainage Material: Free-draining mesh, made from polymer strands that will not degrade within the wall cavity.

1. Provide one of the following configurations:

a. Strips, full-depth of cavity and 10 inches wide, with dovetail shaped notches 7 inches deep that prevent mesh from being clogged with mortar droppings.

2. Products:

a. Morta Net USA, LTD.; Mortar Net.

2.12 CAVITY-WALL INSULATION (Rigid Board for Use Only Where Required)

A. Extruded-Polystyrene Board Insulation: ASTM C 578, Type IV, closed-cell product extruded with an integral skin.

B. Adhesive: Type recommended by insulation board manufacturer for application indicated.

2.13 CAVITY-WALL INSULATION (Spray Foam For General Use)

A. SUMMARY

1. Provide labor, materials and equipment necessary to spray-apply polyurethane foam insulation and water repellent treatment for cavity wall CMU throughout the Project.
2. Submit an Installer's certification or recommendation letter from the spray polyurethane foam material manufacturer.

B. SUBMITTALS

1. Submit manufacturer's technical product data of material intended for use, including specifications, installation instructions, material safety data sheets, and general recommendations.
2. Submit an Installer's certification or recommendation letter from the spray polyurethane foam material manufacturer.

C. PROJECT CONDITIONS

1. Substrate: Proceed with spray polyurethane foam application only after substrate construction, penetration work, and related welding and other hot water has been completed. Verify that mortar has cured sufficiently and masonry substrate is dry by checking surface for moisture with Moisture Detection Paper (MDP) strips.
2. Weather Limitations: Do not install spray polyurethane foam during precipitation or when precipitation is imminent. Do not install when the ambient temperature is less than 50 deg. F. without specific authorization of the manufacturer. Do not install when the ambient humidity exceeds the manufacturer's limits.

D. QUALITY ASSURANCE

1. Installer shall be a firm which has had at least 3 years of successful experience in application of spray polyurethane foam products.
2. Installer will provide equipment to spray apply polyurethane foam including, but not limited to, high pressure plural component proportioning pump, heated hoses of suitable

length, spray gun, drum pumps or other material feeding system, and other ancillary equipment necessary for the Project.

3. Test Application: Prior to start of work, installer will spray-apply an area of approximately 100 square feet at the specified thickness as directed by Architect for the purpose of demonstrating visual and physical effects. Proceed with work only after Architect's acceptance of test application.

E. MATERIALS

1. Spray polyurethane foam shall be Incylthane 2000 manufactured by PolyMaster, Inc., Knoxville, TN. Supply polyurethane foam shall have the following physical properties:

Property	Value	Units	Test Method
Core Density	1.9 – 2.2	lb./ft. 3	ASTM D-1622
Water Vapor Transmission	< 1.0 @ 2" thick	perms	ASTM E-96
R-Value	7.0 (min.) @ 1" thick	hr.ft.2.deg.F/Btu	ASTM C-518
Compressive Strength	25 (min.)	psi	ASTM D-1621
Flame Spread	<25		ASTM E-84
Smoke Developed	<450		ASTM E-84
Air Leakage	0 @ 6.24 psf	cfm/ft. 2	ASTM E-285
Tensile Bond Strength	>45 for Masonry >15 for Gypsum Sheathing	psi	ASTM C-297
Hydrostatic Pressure Resistance	No Failure @ 184.9 cm Head Pressure		AATCC 127

2. Products of other manufacturers will be considered for acceptance provided they equal or exceed the material requirements and functional qualities of the specified product. Requests for Architect's approval and complete technical data for evaluation must be received at least 10 days prior to bid due date. Additional approved manufacturers will be issued by Addendum.

F. MISCELLANEOUS MATERIALS

1. Foam Repair Kit: Handi-Foam 2-part Quick-Cure manufactured by Fomo Products, Inc., Norton, OH.
2. Mineral Wool: Delta Safing Mineral Wool Board, 4 lb./cu. ft. density, manufactured by Rock Wool Manufacturing Co., Leeds, AL.
3. Moisture Detection Paper (MDP) Strips: MDP Strips manufactured by North Carolina Foam Industries, Mount Airy, NC.

G. PREPARATION

1. Clean masonry substrate of substances which would interfere with the adhesion of the spray polyurethane foam.
2. Fill voids between masonry and structural steel with mineral wool.
3. Mask adjacent materials as needed to prevent overspray.
4. Test substrate with Moisture Detection Paper (MDP) strips to affirm that the substrate is dry.

H. APPLICATION

1. Apply spray polyurethane foam directly to the masonry block in accordance to the manufacturer's installation instructions. All surfaces to be sprayed with foam must be free of all forms of moisture and ice. Surfaces can be checked with NCFI's MDP (Moisture Detection Paper) strips prior to and during foam application.
2. Do not apply spray polyurethane foam during inclement weather or when ambient temperature and humidity are outside the ranges prescribed by the manufacturer.
3. Apply the spray polyurethane foam to an average thickness of 2-1/2 inches with a minimum thickness of 2 inches. Apply the full thickness less ¼ inch per inch of average thickness as in table below.

Table 1: R-Values at Specified Thickness

R-Value of Insulation	Average Thickness (Inches)	Minimum Thickness (Inches)
7.0	1	¾
10.5	1-1/2	1-1/4
14	2	1-1/2
17.5	2-1/2	2

4. Shield the spray polyurethane foam from interior exposure with an approved thermal barrier.
5. Remove overspray from adjacent surfaces.

I. REPAIR TECHNIQUES

1. Where damage occurs which violates the spray foam's air and moisture seal, repair as needed using the specified spray polyurethane material or the specified foam repair kit material.

2.14 MASONRY CLEANERS

A. Proprietary Acidic Cleaner: Manufacturer's standard-strength cleaner designed for removing mortar/grout stains, efflorescence, and other new construction stains from new masonry without discoloring or damaging masonry surfaces. Use product expressly approved for intended use by cleaner manufacturer and manufacturer of masonry units being cleaned.

1. Manufacturers:

    a. Diedrich Technologies, Inc.
    b. EaCo Chem, Inc.
    c. ProSoCo, Inc.

2.15 MORTAR AND GROUT MIXES

A. General: Do not use admixtures, including pigments, air-entraining agents, accelerators, retarders, water-repellent agents, antifreeze compounds, or other admixtures, unless otherwise indicated.

1. Do not use calcium chloride in mortar or grout.
2. Limit cementitious materials in mortar to portland cement and lime.
3. Limit cementitious materials in mortar for exterior and reinforced masonry to portland cement and lime.
4. Add cold-weather admixture (if used) at same rate for all mortar that will be exposed to view, regardless of weather conditions, to ensure that mortar color is consistent.

B. Preblended, Dry Mortar Mix: Furnish dry mortar ingredients in form of a preblended mix. Measure quantities by weight to ensure accurate proportions, and thoroughly blend ingredients before delivering to Project site.

C. Mortar for Unit Masonry: Comply with ASTM C 270, Property Specification. Provide the following types of mortar for applications stated unless another type is indicated.

1. For masonry below grade or in contact with earth, use Type M.
2. For reinforced masonry, use Type S.
3. For exterior, above-grade, load-bearing and non-load-bearing walls and parapet walls; for interior load-bearing walls; for interior non-load-bearing partitions; and for other applications where another type is not indicated, use Type N.
4. For interior non-load-bearing partitions, Type N.

D. Pigmented Mortar: Use colored cement product or select and proportion pigments with other ingredients to produce color required. Do not add pigments to colored cement products.

1. Pigments shall not exceed 10 percent of portland cement by weight.
2. Mix to match Architect's sample.

E. Colored-Aggregate Mortar: Produce required mortar color by using colored aggregates and natural color or white cement as necessary to produce required mortar color.

1. Mix to match Architect's sample.

F. Grout for Unit Masonry: Comply with ASTM C 476.

1. Use grout of type indicated or, if not otherwise indicated, of type (fine or coarse) that will comply with Table 1.15.1 in ACI 530.1/ASCE 6/TMS 602 for dimensions of grout spaces and pour height.

2. Provide grout with a slump of 8 to 11 inches as measured according to ASTM C 143/C 143M.

G. Epoxy Pointing Mortar: Mix epoxy pointing mortar to comply with mortar manufacturer's written instructions.

2.16 SOURCE QUALITY CONTROL

A. Owner will engage a qualified independent testing agency to perform source quality-control testing indicated below:

1. Payment for these services will be made by Owner.
2. Retesting of materials failing to comply with specified requirements shall be done at Contractor's expense.

B. Clay Masonry Unit Test: For each type of unit furnished, per ASTM C 67.

C. Concrete Masonry Unit Test: For each type of unit furnished, per ASTM C 140.

PART 3 - EXECUTION

3.1 EXAMINATION

A. Examine conditions, with Installer present, for compliance with requirements for installation tolerances and other conditions affecting performance of work.

1. For the record, prepare written report, endorsed by Installer, listing conditions detrimental to performance of work.
2. Verify that foundations are within tolerances specified.
3. Verify that reinforcing dowels are properly placed.

B. Before installation, examine rough-in and built-in construction for piping systems to verify actual locations of piping connections.

C. Proceed with installation only after unsatisfactory conditions have been corrected.

3.2 INSTALLATION, GENERAL

A. Thickness: Build cavity and composite walls and other masonry construction to full thickness shown. Build single-wythe walls to actual widths of masonry units, using units of widths indicated.

B. Build chases and recesses to accommodate items specified in this and other Sections.

C. Leave openings for equipment to be installed before completing masonry. After installing equipment, complete masonry to match the construction immediately adjacent to opening.

D. Use full-size units without cutting if possible. If cutting is required to provide a continuous pattern or to fit adjoining construction, cut units with motor-driven saws; provide clean, sharp, unchipped edges. Allow units to dry before laying unless wetting of units is specified. Install cut units with cut surfaces and, where possible, cut edges concealed.

E. Select and arrange units for exposed unit masonry to produce a uniform blend of colors and textures.

1. Mix units from several pallets or cubes as they are placed.

F. Matching Existing Masonry: Match coursing, bonding, color, and texture of existing masonry.

G. Wetting of Brick: Wet brick before laying if initial rate of absorption exceeds 30 g/30 sq. in. per minute when tested per ASTM C 67. Allow units to absorb water so they are damp but not wet at time of laying.

H. Comply with construction tolerances in ACI 530.1/ASCE 6/TMS 602 and with the following:

1. For conspicuous vertical lines, such as external corners, door jambs, reveals, and expansion and control joints, do not vary from plumb by more than 1/8 inch in 10 feet, 1/4 inch in 20 feet, or 1/2 inch maximum.
2. For vertical alignment of exposed head joints, do not vary from plumb by more than 1/4 inch in 10 feet, or 1/2 inch maximum.
3. For conspicuous horizontal lines, such as lintels, sills, parapets, and reveals, do not vary from level by more than 1/8 inch in 10 feet, 1/4 inch in 20 feet, or 1/2 inch maximum.
4. For exposed bed joints, do not vary from thickness indicated by more than plus or minus 1/8 inch, with a maximum thickness limited to 1/2 inch. Do not vary from bed-joint thickness of adjacent courses by more than 1/8 inch.
5. For exposed head joints, do not vary from thickness indicated by more than plus or minus 1/8 inch. Do not vary from adjacent bed-joint and head-joint thicknesses by more than 1/8 inch.
6. For faces of adjacent exposed masonry units, do not vary from flush alignment by more than 1/16 inch except due to warpage of masonry units within tolerances specified for warpage of units.
7. For exposed bed joints and head joints of stacked bond, do not vary from a straight line by more than 1/16 inch from one masonry unit to the next.

3.3 LAYING MASONRY WALLS

A. Lay out walls in advance for accurate spacing of surface bond patterns with uniform joint thicknesses and for accurate location of openings, movement-type joints, returns, and offsets. Avoid using less-than-half-size units, particularly at corners, jambs, and, where possible, at other locations.

B. Bond Pattern for Exposed Masonry: Unless otherwise indicated, lay exposed masonry in running bond; do not use units with less than nominal 4-inch horizontal face dimensions at corners or jambs.

C. Lay concealed masonry with all units in a wythe in running bond or bonded by lapping not less than 4-inches. Bond and interlock each course of each wythe at corners. Do not use units with less than nominal 4-inch horizontal face dimensions at corners or jambs.

D. Built-in Work: As construction progresses, build in items specified in this and other Sections. Fill in solidly with masonry around built-in items.

E. Fill space between steel frames and masonry solidly with mortar, unless otherwise indicated.

F. Where built-in items are to be embedded in cores of hollow masonry units, place a layer of metal lath, wire mesh, or plastic mesh in the joint below and rod mortar or grout into core.

G. Fill cores in hollow concrete masonry units with grout 24 inches under bearing plates, beams, lintels, posts, and similar items, unless otherwise indicated.

H. Build non-load-bearing interior partitions full height of story to underside of solid floor or roof structure above, unless otherwise indicated.

1. Install compressible filler in joint between top of partition and underside of structure above.
2. Fasten partition top anchors to structure above and build into top of partition. Grout cells of CMUs solidly around plastic tubes of anchors and push tubes down into grout to provide 1/2-inch clearance between end of anchor rod and end of tube. Space anchors 48 inches o.c., unless otherwise indicated.
3. At fire-rated partitions, treat joint between top of partition and underside of structure above to comply with Division 7 Section "Fire-Resistive Joint Systems."

3.4 MORTAR BEDDING AND JOINTING

A. Lay solid masonry units with completely filled bed and head joints; butter ends with sufficient mortar to fill head joints and shove into place. Do not deeply furrow bed joints or slush head joints.

B. Tool exposed joints slightly concave when thumbprint hard, using a jointer larger than joint thickness, unless otherwise indicated.

C. Lay structural-clay tile as follows:

1. Lay vertical-cell units with full head joints, unless otherwise indicated. Provide bed joints with full mortar coverage on face shells and webs.
2. Lay horizontal-cell units with full bed joints, unless otherwise indicated. Keep drainage channels, if any, free of mortar. Form head joints with sufficient mortar so excess will be squeezed out as units are placed in position. Butter both sides of units to be placed, or butter one side of unit already in place and one side of unit to be placed.
3. Maintain joint thicknesses indicated except for minor variations required to maintain bond alignment. If not indicated, lay walls with 3/8-inch thick joints.
4. Provide epoxy-mortar pointed joints for base units, rake out setting mortar to a uniform depth of 1/4 inch and point with epoxy mortar to comply with epoxy-mortar manufacturer's written instructions.

3.5 CAVITY WALLS

A. Bond wythes of cavity walls together using one of the following methods:

1. Individual Metal Ties: Provide ties as shown installed in horizontal joints, but not less than one metal tie for 2.67 sq. ft. of wall area spaced not to exceed 24 inches o.c. horizontally and 16 inches o.c. vertically. Stagger ties in alternate courses. Provide additional ties within 12 inches of openings and space not more than 36 inches apart around perimeter of openings. At intersecting and abutting walls, provide ties at no more than 24 inches o.c. vertically.

    a. Where one wythe is of clay masonry and the other of concrete masonry, use adjustable (two-piece) type ties to allow for differential movement regardless of whether bed joints align.

2. Masonry Joint Reinforcement: Installed in horizontal mortar joints.

    a. Where one wythe is of clay masonry and the other of concrete masonry, use adjustable (two-piece) type reinforcement to allow for differential movement regardless of whether bed joints align.

3. Masonry Veneer Anchors: Comply with requirements for anchoring masonry veneers.

B. Keep cavities clean of mortar droppings and other materials during construction. Bevel beds away from cavity, to minimize mortar protrusions into cavity. Do not attempt to trowel or remove mortar fins protruding into cavity.

C. Installing Cavity-Wall Insulation: Place small dabs of adhesive, spaced approximately 12 inches o.c. both ways, on inside face of insulation boards, or attach with plastic fasteners designed for this purpose. Fit courses of insulation between wall ties and other confining obstructions in cavity, with edges butted tightly both ways. Press units firmly against inside wythe of masonry or other construction as shown.

1. Fill cracks and open gaps in insulation with crack sealer compatible with insulation and masonry.

3.6 MASONRY JOINT REINFORCEMENT

A. General: Install entire length of longitudinal side rods in mortar with a minimum cover of 5/8 inch on exterior side of walls, 1/2 inch elsewhere. Lap reinforcement a minimum of 6 inches.

1. Space reinforcement not more than 16 inches o.c.
2. Provide reinforcement not more than 8 inches above and below wall openings and extending 12 inches beyond openings.

    a. Reinforcement above is in addition to continuous reinforcement.

B. Interrupt joint reinforcement at control and expansion joints, unless otherwise indicated.

C. Provide continuity at wall intersections by using prefabricated T-shaped units.

D. Provide continuity at corners by using prefabricated L-shaped units.

E. Cut and bend reinforcing units as directed by manufacturer for continuity at returns, offsets, column fireproofing, pipe enclosures, and other special conditions.

3.7 ANCHORING MASONRY TO STRUCTURAL MEMBERS

A. Anchor masonry to structural members where masonry abuts or faces structural members to comply with the following:

1. Provide an open space not less than 1/2 inch in width between masonry and structural member, unless otherwise indicated. Keep open space free of mortar and other rigid materials.
2. Anchor masonry to structural members with anchors embedded in masonry joints and attached to structure.
3. Space anchors as indicated, but not more than 16 inches o.c. vertically and 24 inches o.c. horizontally.

3.8 ANCHORING MASONRY VENEERS

A. Anchor masonry veneers to concrete and masonry backup with masonry-veneer anchors to comply with the following requirements:

1. Embed tie sections in masonry joints. Provide not less than 2 inches of air space between back of masonry veneer and face of sheathing.
2. Locate anchor sections to allow maximum vertical differential movement of ties up and down.
3. Space anchors as indicated, but not more than 16 inches o.c. vertically and 24 inches o.c. horizontally with not less than 1 anchor for each 2.67 sq. ft. of wall area. Install additional anchors within 12 inches of openings and at intervals, not exceeding 36 inches, around perimeter.

3.9 CONTROL AND EXPANSION JOINTS

A. General: Install control and expansion joint materials in unit masonry as masonry progresses. Do not allow materials to span control and expansion joints without provision to allow for in-plane wall or partition movement.

B. Form control joints in concrete masonry as follows:

1. Fit bond-breaker strips into hollow contour in ends of concrete masonry units on one side of control joint. Fill resultant core with grout and rake out joints in exposed faces for application of sealant.

C. Form expansion joints in brick made from clay or shale as follows:

1. Form open joint full depth of brick wythe and of width indicated, but not less than 3/8 inch for installation of sealant and backer rod specified in Division 7 Section "Joint Sealants."

D. Provide horizontal, pressure-relieving joints by either leaving an air space or inserting a compressible filler of width required for installing sealant and backer rod specified in Division 7 Section "Joint Sealants," but not less than 3/8 inch.

1. Locate horizontal, pressure-relieving joints beneath shelf angles supporting masonry.

3.10 LINTELS

A. Install steel lintels where indicated.

B. Provide masonry lintels where shown and where openings of more than 12 inches for brick size units and 24 inches for block size units are shown without structural steel or other supporting lintels.

C. Provide minimum bearing of 8 inches at each jamb, unless otherwise indicated.

3.11 FLASHING, WEEP HOLES, CAVITY DRAINAGE, AND VENTS

A. General: Install embedded flashing and weep holes in masonry at shelf angles, lintels, ledges, other obstructions to downward flow of water in wall, and where indicated.

1. Prepare masonry surfaces so they are smooth and free from projections that could puncture flashing. Where flashing is within mortar joint, place through-wall flashing on sloping bed of mortar and cover with mortar. Before covering with mortar, seal penetrations in flashing with adhesive, sealant, or tape as recommended by flashing manufacturer.
2. At multiwythe masonry walls, including cavity walls, extend flashing through outer wythe, turned up a minimum of 8 inches, and 1-1/2 inches into the inner wythe. Form 1/4-inch hook in edge of flashing embedded in inner wythe.
3. At lintels and shelf angles, extend flashing a minimum of 6 inches into masonry at each end. At heads and sills, extend flashing 6 inches at ends and turn up not less than 2 inches to form end dams.
4. Install metal drip edges beneath flexible flashing at exterior face of wall. Stop flexible flashing 1/2 inch back from outside face of wall and adhere flexible flashing to top of metal drip edge.
5. Install metal flashing termination beneath flexible flashing at exterior face of wall. Stop flexible flashing 1/2 inch back from outside face of wall and adhere flexible flashing to top of metal flashing termination.

B. Install reglets and nailers for flashing and other related construction where they are shown to be built into masonry.

C. Install weep holes in head joints in exterior wythes of first course of masonry immediately above embedded flashing and as follows:

1. Use specified weep/vent products to form weep holes.
2. Space weep holes 24 inches o.c., unless otherwise indicated.

D. Place cavity drainage material in cavities to comply with configuration requirements for cavity drainage material in Part 2 "Miscellaneous Masonry Accessories" Article.

3.12 REINFORCED UNIT MASONRY INSTALLATION

A. Temporary Formwork and Shores: Construct formwork and shores as needed to support reinforced masonry elements during construction.

1. Construct formwork to provide shape, line, and dimensions of completed masonry as indicated. Make forms sufficiently tight to prevent leakage of mortar and grout. Brace, tie, and support forms to maintain position and shape during construction and curing of reinforced masonry.
2. Do not remove forms and shores until reinforced masonry members have hardened sufficiently to carry their own weight and other temporary loads that may be placed on them during construction.

B. Placing Reinforcement: Comply with requirements in ACI 530.1/ASCE 6/TMS 602.

C. Grouting: Do not place grout until entire height of masonry to be grouted has attained enough strength to resist grout pressure.

1. Comply with requirements in ACI 530.1/ASCE 6/TMS 602 for cleanouts and for grout placement, including minimum grout space and maximum pour height.
2. Limit height of vertical grout pours to not more than 60 inches.

3.13 FIELD QUALITY CONTROL

A. Testing Agency: Owner will engage a qualified independent testing and inspecting agency to perform field tests and inspections indicated below and prepare test reports:

1. Payment for these services will be made by Owner.
2. Retesting of materials failing to comply with specified requirements shall be done at Contractor's expense.

B. Testing Frequency: One set of tests for each 5000 sq. ft. of wall area or portion thereof.

C. Clay Masonry Unit Test: For each type of unit provided, per ASTM C 67.

D. Concrete Masonry Unit Test: For each type of unit provided, per ASTM C 140.

E. Mortar Test (Property Specification): For each mix provided, per ASTM C 780. Test mortar for mortar air content and compressive strength.

F. Grout Test (Compressive Strength): For each mix provided, per ASTM C 1019.

G. Prism Test: For each type of construction provided, per ASTM C 1314 at 7 days and at 28 days.

3.14 MASONRY WASTE DISPOSAL

A. Salvageable Materials: Unless otherwise indicated, excess masonry materials are Contractor's property. At completion of unit masonry work, remove from Project site.

B. Excess Masonry Waste: Remove masonry waste, and legally dispose of off Owner's property.

END OF SECTION 04810

SECTION 05120
STRUCTURAL STEEL

PART 1 - GENERAL

1.1 RELATED DOCUMENTS

A. Drawings and general provisions of the Contract, including General and Supplementary Conditions and Division 1 Specification Sections, apply to this Section.

1.2 SUMMARY

A. This Section includes the following:

1. Structural steel.
2. Architecturally exposed structural steel.
3. Prefabricated building columns.
4. Grout.

B. Related Sections include the following:

1. Division 1 Section "Quality Requirements" for independent testing agency procedures and administrative requirements.
2. Division 5 Section "Steel Deck" for field installation of shear connectors.
3. Division 5 Section "Metal Fabrications" for steel lintels or shelf angles not attached to structural-steel frame, miscellaneous steel fabrications and other metal items not defined as structural steel.
4. Division 9 painting Sections for surface preparation and priming requirements.

1.3 DEFINITIONS

A. Structural Steel: Elements of structural-steel frame, as classified by AISC's "Code of Standard Practice for Steel Buildings and Bridges," that support design loads.

B. Architecturally Exposed Structural Steel: Structural steel designated as architecturally exposed structural steel in the Contract Documents.

1.4 PERFORMANCE REQUIREMENTS

A. Connections: Provide details of simple shear connections required by the Contract Documents to be selected or completed by structural-steel fabricator to withstand ASD-service loads indicated and comply with other information and restrictions indicated.

1. Select and complete connections using schematic details indicated and AISC's "Manual of Steel Construction, Allowable Stress Design," Part 4.
2. Engineering Responsibility: Fabricator's responsibilities include using a qualified professional engineer to prepare structural analysis data for structural-steel connections.

B. Construction: Type FR, fully restrained.

C. Construction: Type 2, simple framing.

1.5 SUBMITTALS

A. Product Data: For each type of product indicated.

B. Shop Drawings: Show fabrication of structural-steel components.

1. Include details of cuts, connections, splices, camber, holes, and other pertinent data.
2. Include embedment drawings.
3. Indicate welds by standard AWS symbols, distinguishing between shop and field welds, and show size, length, and type of each weld.
4. Indicate type, size, and length of bolts, distinguishing between shop and field bolts. Identify pretensioned and slip-critical high-strength bolted connections.
5. For structural-steel connections indicated to comply with design loads, include structural analysis data signed and sealed by the qualified professional engineer responsible for their preparation.

C. Welding certificates.

D. Qualification Data: For fabricator.

E. Mill Test Reports: Signed by manufacturers certifying that the following products comply with requirements:

1. Structural steel including chemical and physical properties.
2. Bolts, nuts, and washers including mechanical properties and chemical analysis.
3. Direct-tension indicators.
4. Tension-control, high-strength bolt-nut-washer assemblies.
5. Shear stud connectors.
6. Shop primers.
7. Nonshrink grout.

F. Source quality-control test reports.

1.6 QUALITY ASSURANCE

A. Installer Qualifications: A qualified installer who participates in the AISC Quality Certification Program and is designated an AISC-Certified Erector.

B. Fabricator Qualifications: A qualified fabricator who participates in the AISC Quality Certification Program and is designated an AISC-Certified Plant.

C. Shop-Painting Applicators: Qualified according to SSPC-QP 3, "Standard Procedure for Evaluating Qualifications of Shop Painting Applicators."

D. Welding: Qualify procedures and personnel according to AWS D1.1, "Structural Welding Code--Steel."

E. Comply with applicable provisions of the following specifications and documents:

1. AISC's "Code of Standard Practice for Steel Buildings and Bridges."
2. AISC's "Seismic Provisions for Structural Steel Buildings" and "Supplement No. 2."
3. AISC's "Specification for Structural Steel Buildings--Allowable Stress Design and Plastic Design."
4. AISC's "Specification for the Design of Steel Hollow Structural Sections."
5. AISC's "Specification for Allowable Stress Design of Single-Angle Members."
6. RCSC's "Specification for Structural Joints Using ASTM A 325 or A 490 Bolts."

F. Mockups: Build mockups of architecturally exposed structural steel to set quality standards for fabrication and installation.

1. Coordinate finish painting requirements with Division 9 painting Sections.
2. Approved mockups may become part of the completed Work if undisturbed at time of Substantial Completion.

G. Preinstallation Conference: Conduct conference at Project site to comply with requirements in Division 1 Section "Project Management and Coordination."

1.7 DELIVERY, STORAGE, AND HANDLING

A. Store materials to permit easy access for inspection and identification. Keep steel members off ground and spaced by using pallets, dunnage, or other supports and spacers. Protect steel members and packaged materials from erosion and deterioration.

1. Store fasteners in a protected place. Clean and relubricate bolts and nuts that become dry or rusty before use.
2. Do not store materials on structure in a manner that might cause distortion, damage, or overload to members or supporting structures. Repair or replace damaged materials or structures as directed.

1.8 COORDINATION

A. Furnish anchorage items to be embedded in or attached to other construction without delaying the Work. Provide setting diagrams, sheet metal templates, instructions, and directions for installation.

PART 2 - PRODUCTS

2.1 STRUCTURAL-STEEL MATERIALS

A. W-Shapes: ASTM A 992, Grade 50.

B. Channels, Angles, M, S-Shapes: ASTM A 36.

C. Plate and Bar: ASTM A 36.

D. Corrosion-Resisting Structural Steel: ASTM A 588, Grade 50.

E. Cold-Formed Hollow Structural Sections: ASTM A 500, Grade B, structural tubing.

F. Corrosion-Resisting Cold-Formed Hollow Structural Sections: ASTM A 847, structural tubing.

G. Steel Pipe: ASTM A 53, Type E or S, Grade B.

1. Weight Class: Standard.
2. Finish: Black.

H. Welding Electrodes: Comply with AWS requirements.

2.2 BOLTS, CONNECTORS, AND ANCHORS

A. High-Strength Bolts, Nuts, and Washers: ASTM A 325, Type 1, heavy hex steel structural bolts; ASTM A 563 heavy hex carbon-steel nuts; and ASTM F 436 hardened carbon-steel washers.

1. Finish: Hot-dip zinc coating, ASTM A 153, Class C.

B. High-Strength Bolts, Nuts, and Washers: ASTM A 490, Type 1, heavy hex steel structural bolts; ASTM A 563 heavy hex carbon-steel nuts; and ASTM F 436 hardened carbon-steel washers, plain.

C. Shear Connectors: ASTM A 108, Grades 1015 through 1020, headed-stud type, cold-finished carbon steel; AWS D1.1, Type B.

D. Unheaded Anchor Rods: ASTM A 307, Grade A.

1. Configuration: Hooked.
2. Nuts: ASTM A 563 hex carbon steel.
3. Plate Washers: ASTM A 36/A 36M carbon steel.

4. Washers: ASTM F 436 hardened carbon steel.
5. Finish: Hot-dip zinc coating, ASTM A 153/A 153M, Class C.

E. Headed Anchor Rods: ASTM A 307, Grade A, straight.

1. Nuts: ASTM A 563 heavy hex carbon steel.
2. Plate Washers: ASTM A 36/A 36M carbon steel.
3. Washers: ASTM F 436 hardened carbon steel.
4. Finish: Hot-dip zic coating, ASTM A 153/A 153M, Class C.

F. Threaded Rods: ASTM A 36.

1. Nuts: ASTM A 563 hex carbon steel.
2. Washers: ASTM A 36 carbon steel.
3. Finish: Hot-dip zinc coating, ASTM A 153/A 153M, Class C.

G. Clevises and Turnbuckles: ASTM A 108, Grade 1035, cold-finished carbon steel.

H. Eye Bolts and Nuts: ASTM A 108, Grade 1030, cold-finished carbon steel.

I. Sleeve Nuts: ASTM A 108, Grade 1018, cold-finished carbon steel.

2.3 PRIMER

A. Primer: SSPC-Paint 25, Type I, iron oxide, zinc oxide, raw linseed oil, and alkyd.

B. Primer: SSPC-Paint 25 BCS, Type I, iron oxide, zinc oxide, raw linseed oil, and alkyd.

C. Primer: SSPC-Paint 23, latex primer.

D. Primer: Fabricator's standard lead- and chromate-free, nonasphaltic, rust-inhibiting primer.

E. Galvanizing Repair Paint: ASTM A 780.

2.4 GROUT

A. Cement Grout: Portland cement, ASTM C 150, Type I; and clean, natural sand, ASTM C 404, Size No. 2. Mix at ratio of 1 part cement to 2-1/2 parts sand, by volume, with minimum water required for placement and hydration.

B. Metallic, Shrinkage-Resistant Grout: ASTM C 1107, factory-packaged, metallic aggregate grout, mixed with water to consistency suitable for application and a 30-minute working time.

C. Nonmetallic, Shrinkage-Resistant Grout: ASTM C 1107, factory-packaged, nonmetallic aggregate grout, noncorrosive, nonstaining, mixed with water to consistency suitable for application and a 30-minute working time.

2.5 FABRICATION

A. Structural Steel: Fabricate and assemble in shop to greatest extent possible. Fabricate according to AISC's "Code of Standard Practice for Steel Buildings and Bridges" and AISC's "Specification for Structural Steel Buildings--Allowable Stress Design and Plastic Design."

1. Camber structural-steel members where indicated.
2. Identify high-strength structural steel according to ASTM A 6/ A 6M and maintain markings until structural steel has been erected.
3. Mark and match-mark materials for field assembly.
4. Complete structural-steel assemblies, including welding of units, before starting shop-priming operations.

B. Architecturally Exposed Structural Steel: Comply with fabrication requirements, including tolerance limits, of AISC's "Code of Standard Practice for Steel Buildings and Bridges" for structural steel identified as architecturally exposed structural steel.

1. Fabricate with exposed surfaces smooth, square, and free of surface blemishes including pitting, rust, scale, seam marks, roller marks, rolled trade names, and roughness.
2. Remove blemishes by filling or grinding or by welding and grinding, before cleaning, treating, and shop priming.

C. Thermal Cutting: Perform thermal cutting by machine to greatest extent possible.

1. Plane thermally cut edges to be welded to comply with requirements in AWS D1.1.

D. Bolt Holes: Cut, drill or punch standard bolt holes perpendicular to metal surfaces.

E. Finishing: Accurately finish ends of columns and other members transmitting bearing loads.

F. Cleaning: Clean and prepare steel surfaces that are to remain unpainted according to SSPC-SP 1, "Solvent Cleaning."

G. Shear Connectors: Prepare steel surfaces as recommended by manufacturer of shear connectors. Use automatic end welding of headed-stud shear connectors according to AWS D1.1 and manufacturer's written instructions.

H. Steel Wall-Opening Framing: Select true and straight members for fabricating steel wall-opening framing to be attached to structural steel. Straighten as required to provide uniform, square, and true members in completed wall framing.

I. Welded Door Frames: Build up welded door frames attached to structural steel. Weld exposed joints continuously and grind smooth. Plug-weld fixed steel bar stops to frames. Secure removable stops to frames with countersunk, cross-recessed head machine screws, uniformly spaced not more than 10 inches o.c., unless otherwise indicated.

J. Holes: Provide holes required for securing other work to structural steel and for passage of other work through steel framing members.

1. Cut, drill, or punch holes perpendicular to steel surfaces.

2. Base-Plate Holes: Cut, drill, mechanically thermal cut, or punch holes perpendicular to steel surfaces.
3. Weld threaded nuts to framing and other specialty items indicated to receive other work.

2.6 SHOP CONNECTIONS

A. High-Strength Bolts: Shop install high-strength bolts according to RCSC's "Specification for Structural Joints Using ASTM A 325 or A 490 Bolts" for type of bolt and type of joint specified.

1. Joint Type: Snug tightened.

B. Weld Connections: Comply with AWS D1.1 for welding procedure specifications, tolerances, appearance, and quality of welds and for methods used in correcting welding work.

1. Remove backing bars or runoff tabs, back gouge, and grind steel smooth.
2. Assemble and weld built-up sections by methods that will maintain true alignment of axes without exceeding tolerances of AISC's "Code of Standard Practice for Steel Buildings and Bridges" for mill material.
3. Verify that weld sizes, fabrication sequence, and equipment used for architecturally exposed structural steel will limit distortions to allowable tolerances.

a. Grind butt welds flush.
b. Grind or fill exposed fillet welds to smooth profile. Dress exposed welds.

2.7 PREFABRICATED BUILDING COLUMNS

A. General: Prefabricated building columns consisting of load-bearing structural-steel members encased in manufacturer's standard insulating concrete for fire protection and enclosed in an outer non-load-bearing steel shell.

1. Concrete Fill: Manufacturer's standard-mix structural concrete, with a minimum 28-day compressive strength of 5000 psi, machine mixed and mechanically vibrated during placement to produce concrete fill free of voids.

B. Fire-Resistance Ratings: Provide prefabricated building column listed and labeled by UL or another testing and inspecting agency acceptable to authorities having jurisdiction for ratings indicated, based on testing according to ASTM E 119.

1. Fire-Resistance Rating: 2 hours.

C. Column Configuration: Provide columns of sizes and shapes indicated. Fabricate connections to comply with details shown or as required to suit type of structure indicated.

D. Available Manufacturers: Subject to compliance with requirements, manufacturers offering prefabricated building columns that may be incorporated into the Work include, but are not limited to, the following:

E. Manufacturers: Subject to compliance with requirements, provide prefabricated building columns by one of the following:

1. Black Rock Column, Inc.
2. Dean, George H. Inc.
3. Fire-Trol Division; Dean Lally L.P.

2.8 SHOP PRIMING

A. Shop prime steel surfaces except the following:

1. Surfaces embedded in concrete or mortar. Extend priming of partially embedded members to a depth of 2 inches.
2. Surfaces to be field welded.
3. Surfaces to be high-strength bolted with slip-critical connections.
4. Surfaces to receive sprayed fire-resistive materials.
5. Galvanized surfaces.

B. Surface Preparation: Clean surfaces to be painted. Remove loose rust and mill scale and spatter, slag, or flux deposits. Prepare surfaces according to the following specifications and standards:

1. SSPC-SP 2, "Hand Tool Cleaning."
2. SSPC-SP 3, "Power Tool Cleaning."
3. SSPC-SP 5/NACE No. 1, "White Metal Blast Cleaning."
4. SSPC-SP 6/NACE No. 3, "Commercial Blast Cleaning."
5. SSPC-SP 7/NACE No. 4, "Brush-Off Blast Cleaning."
6. SSPC-SP 8, "Pickling."
7. SSPC-SP 10/NACE No. 2, "Near-White Blast Cleaning."
8. SSPC-SP 11, "Power Tool Cleaning to Bare Metal."
9. SSPC-SP 14/NACE No. 8, "Industrial Blast Cleaning."

C. Priming: Immediately after surface preparation, apply primer according to manufacturer's written instructions and at rate recommended by SSPC to provide a dry film thickness of not less than 1.5 mils. Use priming methods that result in full coverage of joints, corners, edges, and exposed surfaces.

1. Stripe paint corners, crevices, bolts, welds, and sharp edges.
2. Apply two coats of shop paint to inaccessible surfaces after assembly or erection. Change color of second coat to distinguish it from first.

D. Painting: Apply a 1-coat, nonasphaltic primer complying with SSPC-PS Guide 7.00, "Painting System Guide 7.00: Guide for Selecting One-Coat Shop Painting Systems," to provide a dry film thickness of not less than 1.5 mils.

2.9 GALVANIZING

A. Hot-Dip Galvanized Finish: Apply zinc coating by the hot-dip process to structural steel according to ASTM A 123/ A 123M.

1. Fill vent holes and grind smooth after galvanizing.
2. Galvanize shelf angles attached to structural-steel frame and located in exterior walls.

2.10 SOURCE QUALITY CONTROL

A. Owner will engage an independent testing and inspecting agency to perform shop tests and inspections and prepare test reports.

1. Provide testing agency with access to places where structural-steel work is being fabricated or produced to perform tests and inspections.

B. Correct deficiencies in Work that test reports and inspections indicate does not comply with the Contract Documents.

C. Bolted Connections: Shop-bolted connections will be inspected according to RCSC's "Specification for Structural Joints Using ASTM A 325 or A 490 Bolts."

D. Welded Connections: In addition to visual inspection, shop-welded connections will be tested and inspected according to AWS D1.1 and the following inspection procedures, at testing agency's option:

1. Liquid Penetrant Inspection: ASTM E 165.
2. Magnetic Particle Inspection: ASTM E 709; performed on root pass and on finished weld. Cracks or zones of incomplete fusion or penetration will not be accepted.
3. Ultrasonic Inspection: ASTM E 164.
4. Radiographic Inspection: ASTM E 94.

E. In addition to visual inspection, shop-welded shear connectors will be tested and inspected according to requirements in AWS D1.1 for stud welding and as follows:

1. Bend tests will be performed if visual inspections reveal either a less-than- continuous 360-degree flash or welding repairs to any shear connector.
2. Tests will be conducted on additional shear connectors if weld fracture occurs on shear connectors already tested, according to requirements in AWS D1.1.

PART 3 - EXECUTION

3.1 EXAMINATION

A. Verify elevations of concrete- and masonry-bearing surfaces and locations of anchor rods, bearing plates, and other embedments, with steel erector present, for compliance with requirements.

B. Proceed with installation only after unsatisfactory conditions have been corrected.

3.2 PREPARATION

A. Provide temporary shores, guys, braces, and other supports during erection to keep structural steel secure, plumb, and in alignment against temporary construction loads and loads equal in intensity to design loads. Remove temporary supports when permanent structural steel, connections, and bracing are in place, unless otherwise indicated.

1. Do not remove temporary shoring supporting composite deck construction until cast-in-place concrete has attained its design compressive strength.

3.3 ERECTION

A. Set structural steel accurately in locations and to elevations indicated and according to AISC's "Code of Standard Practice for Steel Buildings and Bridges" and "Specification for Structural Steel Buildings--Allowable Stress Design and Plastic Design."

B. Base and Bearing Plates: Clean concrete- and masonry-bearing surfaces of bond-reducing materials, and roughen surfaces prior to setting base and bearing plates. Clean bottom surface of base and bearing plates.

1. Set base and bearing plates for structural members on wedges, shims, or setting nuts as required.
2. Weld plate washers to top of base plate.
3. Snug-tighten anchor rods after supported members have been positioned and plumbed. Do not remove wedges or shims but, if protruding, cut off flush with edge of base or bearing plate before packing with grout.
4. Promptly pack grout solidly between bearing surfaces and base or bearing plates so no voids remain. Neatly finish exposed surfaces; protect grout and allow to cure. Comply with manufacturer's written installation instructions for shrinkage-resistant grouts.

C. Maintain erection tolerances of structural steel and architecturally exposed structural steel within AISC's "Code of Standard Practice for Steel Buildings and Bridges."

D. Align and adjust various members forming part of complete frame or structure before permanently fastening. Before assembly, clean bearing surfaces and other surfaces that will be in permanent contact with members. Perform necessary adjustments to compensate for discrepancies in elevations and alignment.

1. Level and plumb individual members of structure.
2. Make allowances for difference between temperature at time of erection and mean temperature when structure is completed and in service.

E. Splice members only where indicated.

F. Remove erection bolts on welded, architecturally exposed structural steel; fill holes with plug welds; and grind smooth at exposed surfaces.

G. Do not use thermal cutting during erection.

H. Do not enlarge unfair holes in members by burning or using drift pins. Ream holes that must be enlarged to admit bolts.

I. Shear Connectors: Prepare steel surfaces as recommended by manufacturer of shear connectors. Use automatic end welding of headed-stud shear connectors according to AWS D1.1 and manufacturer's written instructions.

3.4 FIELD CONNECTIONS

A. High-Strength Bolts: Install high-strength bolts according to RCSC's "Specification for Structural Joints Using ASTM A 325 or A 490 Bolts" for type of bolt and type of joint specified.

1. Joint Type: Snug tightened.

B. Weld Connections: Comply with AWS D1.1 for welding procedure specifications, tolerances, appearance, and quality of welds and for methods used in correcting welding work.

1. Comply with AISC's "Code of Standard Practice for Steel Buildings and Bridges" and "Specification for Structural Steel Buildings--Allowable Stress Design and Plastic Design" for bearing, adequacy of temporary connections, alignment, and removal of paint on surfaces adjacent to field welds.
2. Remove backing bars or runoff tabs, back gouge, and grind steel smooth.
3. Assemble and weld built-up sections by methods that will maintain true alignment of axes without exceeding tolerances of AISC's "Code of Standard Practice for Steel Buildings and Bridges" for mill material.
4. Verify that weld sizes, fabrication sequence, and equipment used for architecturally exposed structural steel will limit distortions to allowable tolerances.

a. Grind butt welds flush.
b. Grind or fill exposed fillet welds to smooth profile. Dress exposed welds.

3.5 PREFABRICATED BUILDING COLUMNS

A. Install prefabricated building columns to comply with AISC's "Specification for Structural Steel Buildings--Allowable Stress Design and Plastic Design," manufacturer's written recommendations, and requirements of testing and inspecting agency that apply to the fire-resistance rating indicated.

3.6 FIELD QUALITY CONTROL

A. Testing Agency: Owner will engage a qualified independent testing and inspecting agency to inspect field welds and high-strength bolted connections.

B. Bolted Connections: Shop-bolted connections will be tested and inspected according to RCSC's "Specification for Structural Joints Using ASTM A 325 or A 490 Bolts."

C. Welded Connections: Field welds will be visually inspected according to AWS D1.1.

1. In addition to visual inspection, field welds will be tested according to AWS D1.1 and the following inspection procedures, at testing agency's option:

a. Liquid Penetrant Inspection: ASTM E 165.
b. Magnetic Particle Inspection: ASTM E 709; performed on root pass and on finished weld. Cracks or zones of incomplete fusion or penetration will not be accepted.

c. Ultrasonic Inspection: ASTM E 164.
d. Radiographic Inspection: ASTM E 94.

D. In addition to visual inspection, test and inspect field-welded shear connectors according to requirements in AWS D1.1 for stud welding and as follows:

1. Perform bend tests if visual inspections reveal either a less-than- continuous 360-degree flash or welding repairs to any shear connector.
2. Conduct tests on additional shear connectors if weld fracture occurs on shear connectors already tested, according to requirements in AWS D1.1.

E. Correct deficiencies in Work that test reports and inspections indicate does not comply with the Contract Documents.

3.7 REPAIRS AND PROTECTION

A. Repair damaged galvanized coatings on galvanized items with galvanized repair paint according to ASTM A 780 and manufacturer's written instructions.

B. Touchup Painting: After installation, promptly clean, prepare, and prime or reprime field connections, rust spots, and abraded surfaces of prime-painted joists and accessories, bearing plates, and abutting structural steel.

1. Clean and prepare surfaces by SSPC-SP 2 hand-tool cleaning or SSPC-SP 3 power-tool cleaning.
2. Apply a compatible primer of same type as shop primer used on adjacent surfaces.

C. Touchup Painting: Cleaning and touchup painting are specified in Division 9 painting Sections.

END OF SECTION 05120

SECTION 05210
STEEL JOISTS

PART 1 - GENERAL

1.1 RELATED DOCUMENTS

A. Drawings and general provisions of the Contract, including General and Supplementary Conditions and Division 1 Specification Sections, apply to this Section.

1.2 SUMMARY

A. This Section includes the following:

1. K-series steel joists.
2. KCS-type K-series steel joists.
3. K-series steel joist substitutes.
4. Long-span steel joists.
5. Joist girders.
6. Joist accessories.

B. Related Sections include the following:

1. Division 3 Section "Cast-in-Place Concrete" for installing bearing plates in concrete.
2. Division 4 Section "Unit Masonry Assemblies" for installing bearing plates in unit masonry.

1.3 DEFINITIONS

A. SJI "Specifications": Steel Joist Institute's "Standard Specifications, Load Tables and Weight Tables for Steel Joists and Joist Girders."

B. Special Joists: Steel joists or joist girders requiring modification by manufacturer to support nonuniform, unequal, or special loading conditions that invalidate load tables in SJI's "Specifications."

1.4 PERFORMANCE REQUIREMENTS

A. Structural Performance: Provide special joists and connections capable of withstanding design loads indicated.

B. Design special joists to withstand design loads with live load deflections no greater than the following:

1. Roof Joists: Vertical deflection of 1/240 of the span.

1.5 SUBMITTALS

A. Product Data: For each type of joist, accessory, and product indicated.

B. Shop Drawings: Show layout, designation, number, type, location, and spacings of joists. Include joining and anchorage details, bracing, bridging, joist accessories; splice and connection locations and details; and attachments to other construction.

1. Indicate locations and details of bearing plates to be embedded in other construction.
2. Comprehensive engineering analysis of special joists signed and sealed by the qualified professional engineer responsible for its preparation.

C. Welding certificates.

D. Manufacturer Certificates: Signed by manufacturers certifying that joists comply with requirements.

E. Mill Certificates: Signed by bolt manufacturers certifying that bolts comply with requirements.

F. Qualification Data: For manufacturer.

G. Field quality-control test and inspection reports.

H. Research/Evaluation Reports: For joists.

1.6 QUALITY ASSURANCE

A. Manufacturer Qualifications: A manufacturer certified by SJI to manufacture joists complying with applicable standard specifications and load tables of SJI "Specifications."

1. Manufacturer's responsibilities include providing professional engineering services for designing special joists to comply with performance requirements.

B. SJI Specifications: Comply with standard specifications in SJI's "Specifications" that are applicable to types of joists indicated.

C. Welding: Qualify procedures and personnel according to AWS D1.1/D1.1M, "Structural Welding Code - Steel."

1.7 DELIVERY, STORAGE, AND HANDLING

A. Deliver, store, and handle joists as recommended in SJI's "Specifications."

B. Protect joists from corrosion, deformation, and other damage during delivery, storage, and handling.

1.8 SEQUENCING

A. Deliver steel bearing plates to be built into masonry construction.

PART 2 - PRODUCTS

2.1 MATERIALS

A. Steel: Comply with SJI's "Specifications" for web and steel-angle chord members.

B. Steel Bearing Plates: ASTM A 36/A 36M.

C. Carbon-Steel Bolts and Threaded Fasteners: ASTM A 307, Grade A, carbon-steel, hex-head bolts and threaded fasteners; carbon-steel nuts; and flat, unhardened steel washers.

1. Finish: Hot-dip zinc coating, ASTM A 153/A 153M, Class C.

D. High-Strength Bolts, Nuts, and Washers: ASTM A 325, Type 1, heavy hex steel structural bolts; ASTM A 563 heavy hex carbon-steel nuts; and ASTM F 436 hardened carbon-steel washers.

1. Finish: Hot-dip zinc coating, ASTM A 153/A 153M, Class C.

E. Welding Electrodes: Comply with AWS standards.

F. Galvanizing Repair Paint: ASTM A 780.

2.2 PRIMERS

A. Primer: SSPC-Paint 15, or manufacturer's standard shop primer complying with performance requirements in SSPC-Paint 15.

B. Primer: Provide shop primer that complies with Division 9.

2.3 K-SERIES STEEL JOISTS

A. Manufacture steel joists of type indicated according to "Standard Specifications for Open Web Steel Joists, K-Series" in SJI's "Specifications," with steel-angle top- and bottom-chord members, underslung ends, and parallel top chord.

1. Joist Type: K-series steel joists and KCS-type K-series steel joists.

B. Steel Joist Substitutes: Manufacture according to "Standard Specifications for Open Web Steel Joists, K-Series" in SJI's "Specifications," with steel-angle or -channel members.

C. Comply with AWS requirements and procedures for shop welding, appearance, quality of welds, and methods used in correcting welding work.

D. Provide holes in chord members for connecting and securing other construction to joists.

E. Top-Chord Extensions: Extend top chords of joists with SJI's Type S top-chord extensions where indicated, complying with SJI's "Specifications."

F. Extended Ends: Extend bearing ends of joists with SJI's Type R extended ends where indicated, complying with SJI's "Specifications."

G. Do not camber joists.

H. Camber joists according to SJI's "Specifications."

I. Equip bearing ends of joists with manufacturer's standard beveled ends or sloped shoes if joist slope exceeds 1/4 inch per 12 inches.

2.4 JOIST ACCESSORIES

A. Bridging: Provide bridging anchors and number of rows of horizontal or diagonal bridging of material, size, and type required by SJI's "Specifications" for type of joist, chord size, spacing, and span. Furnish additional erection bridging if required for stability.

B. Bridging: Schematically indicated. Detail and fabricate according to SJI's "Specifications." Furnish additional erection bridging if required for stability.

C. Bridging: Fabricate as indicated and according to SJI's "Specifications." Furnish additional erection bridging if required for stability.

D. Fabricate steel bearing plates with integral anchorages of sizes and thicknesses indicated. Shop prime paint.

E. Steel bearing plates with integral anchorages are specified in Division 5 Section "Metal Fabrications."

F. Supply ceiling extensions, either extended bottom-chord elements or a separate extension unit of enough strength to support ceiling construction. Extend ends to within 1/2 inch of finished wall surface, unless otherwise indicated.

G. Supply miscellaneous accessories, including splice plates and bolts required by joist manufacturer to complete joist installation.

2.5 CLEANING AND SHOP PAINTING

A. Clean and remove loose scale, heavy rust, and other foreign materials from fabricated joists and accessories by hand-tool cleaning, SSPC-SP 2.

B. Do not prime paint joists and accessories to receive sprayed fire-resistive materials.

C. Apply 1 coat of shop primer to joists and joist accessories to be primed to provide a continuous, dry paint film not less than 1 mil thick.

D. Shop priming of joists and joist accessories is specified in Division 9.

PART 3 - EXECUTION

3.1 EXAMINATION

A. Examine supporting substrates, embedded bearing plates, and abutting structural framing for compliance with requirements for installation tolerances and other conditions affecting performance.

1. Proceed with installation only after unsatisfactory conditions have been corrected.

3.2 INSTALLATION

A. Do not install joists until supporting construction is in place and secured.

B. Install joists and accessories plumb, square, and true to line; securely fasten to supporting construction according to SJI's "Specifications," joist manufacturer's written recommendations, and requirements in this Section.

1. Before installation, splice joists delivered to Project site in more than one piece.
2. Space, adjust, and align joists accurately in location before permanently fastening.
3. Install temporary bracing and erection bridging, connections, and anchors to ensure that joists are stabilized during construction.
4. Delay rigidly connecting bottom-chord extensions to columns or supports until dead loads have been applied.

C. Field weld joists to supporting steel bearing plates and framework. Coordinate welding sequence and procedure with placement of joists. Comply with AWS requirements and procedures for welding, appearance and quality of welds, and methods used in correcting welding work.

D. Bolt joists to supporting steel framework using carbon-steel bolts.

E. Bolt joists to supporting steel framework using high-strength structural bolts. Comply with RCSC's "Specification for Structural Joints Using ASTM A 325 or ASTM A 490 Bolts" for high-strength structural bolt installation and tightening requirements.

F. Install and connect bridging concurrently with joist erection, before construction loads are applied. Anchor ends of bridging lines at top and bottom chords if terminating at walls or beams.

3.3 FIELD QUALITY CONTROL

A. Testing Agency: Engage a qualified independent testing and inspecting agency to inspect field welds and bolted connections and to perform field tests and inspections and prepare test and inspection reports.

B. Field welds will be visually inspected according to AWS D1.1/D1.1M.

C. In addition to visual inspection, field welds will be tested according to AWS D1.1/D1.1M and the following procedures, as applicable:

1. Radiographic Testing: ASTM E 94.
2. Magnetic Particle Inspection: ASTM E 709.
3. Ultrasonic Testing: ASTM E 164.
4. Liquid Penetrant Inspection: ASTM E 165.

D. Bolted connections will be visually inspected.

E. High-strength, field-bolted connections will be tested and verified according to procedures in RCSC's "Specification for Structural Joints Using ASTM A 325 or ASTM A 490 Bolts."

F. Correct deficiencies in Work that test and inspection reports have indicated are not in compliance with specified requirements.

G. Additional testing will be performed to determine compliance of corrected Work with specified requirements.

3.4 REPAIRS AND PROTECTION

A. Repair damaged galvanized coatings on galvanized items with galvanized repair paint according to ASTM A 780 and manufacturer's written instructions.

B. Touchup Painting: After installation, promptly clean, prepare, and prime or reprime field connections, rust spots, and abraded surfaces of prime-painted joists, bearing plates and accessories.

1. Clean and prepare surfaces by hand-tool cleaning, SSPC-SP 2, or power-tool cleaning, SSPC-SP 3.
2. Apply a compatible primer of same type as shop primer used on adjacent surfaces.

C. Touchup Painting: Cleaning and touchup painting are specified in Division 9.

D. Provide final protection and maintain conditions, in a manner acceptable to manufacturer and Installer, that ensure that joists and accessories are without damage or deterioration at time of Substantial Completion.

END OF SECTION 05210

SECTION 05310
STEEL DECK

PART 1 - GENERAL

1.1 RELATED DOCUMENTS

A. Drawings and general provisions of the Contract, including General and Supplementary Conditions and Division 1 Specification Sections, apply to this Section.

1.2 SUMMARY

A. This Section includes the following:

1. Roof deck.
2. Acoustical roof deck.

B. Related Sections include the following:

1. Division 5 Section "Structural Steel" for shop- and field-welded shear connectors.
2. Division 5 Section "Metal Fabrications" for framing deck openings with miscellaneous steel shapes.
3. Division 9 painting Sections for repair painting of primed deck.

1.3 SUBMITTALS

A. Product Data: For each type of deck, accessory, and product indicated.

B. Shop Drawings: Show layout and types of deck panels, anchorage details, reinforcing channels, pans, cut deck openings, special jointing, accessories, and attachments to other construction.

C. Product Certificates: For each type of steel deck, signed by product manufacturer.

D. Welding certificates.

E. Field quality-control test and inspection reports.

F. Product Test Reports: Based on evaluation of comprehensive tests performed by a qualified testing agency, indicating that each of the following complies with requirements:

1. Power-actuated mechanical fasteners.
2. Acoustical roof deck.

G. Research/Evaluation Reports: For steel deck.

1.4 QUALITY ASSURANCE

A. Testing Agency Qualifications: An independent agency qualified according to ASTM E 329 for testing indicated.

B. Source Limitations for Electrified Cellular Floor Deck: Obtain cellular floor-deck units and compatible electrical components, such as preset inserts, activation kits, afterset inserts, service fittings, header ducts, and trench header ducts, from same manufacturer.

C. Welding: Qualify procedures and personnel according to AWS D1.3, "Structural Welding Code - Sheet Steel."

D. Fire-Test-Response Characteristics: Where indicated, provide steel deck units identical to those tested for fire resistance per ASTM E 119 by a testing and inspecting agency acceptable to authorities having jurisdiction.

1. Fire-Resistance Ratings: Indicated by design designations of applicable testing and inspecting agency.
2. Steel deck units shall be identified with appropriate markings of applicable testing and inspecting agency.

E. AISI Specifications: Comply with calculated structural characteristics of steel deck according to AISI's "North American Specification for the Design of Cold-Formed Steel Structural Members."

F. Electrical Raceway Units: Provide UL-labeled cellular floor-deck units complying with UL 209 and listed in UL's "Electrical Construction Equipment Directory" for use with standard header ducts and outlets for electrical distribution systems.

G. FMG Listing: Provide steel roof deck evaluated by FMG and listed in its "Approval Guide, Building Materials" for Class 1 fire rating and Class 1-90 windstorm ratings.

1.5 DELIVERY, STORAGE, AND HANDLING

A. Protect steel deck from corrosion, deformation, and other damage during delivery, storage, and handling.

B. Stack steel deck on platforms or pallets and slope to provide drainage. Protect with a waterproof covering and ventilate to avoid condensation.

1. Protect and ventilate acoustical cellular roof deck with factory-installed insulation to maintain insulation free of moisture.

1.6 COORDINATION

A. Coordinate installation of sound-absorbing insulation strips in topside ribs of acoustical deck with roofing installation specified in Division 7 to ensure protection of insulation strips against damage from effects of weather and other causes.

B. Coordinate layout and installation of trench headers, preset inserts, duct fittings, and other components specified in Division 16 Section "Underfloor Raceways" with installation of electrified cellular metal floor deck.

PART 2 - PRODUCTS

2.1 MANUFACTURERS

A. Available Manufacturers: Subject to compliance with requirements, manufacturers offering products that may be incorporated into the Work include, but are not limited to, the following:

B. Manufacturers: Subject to compliance with requirements, provide products by one of the following:

1. Steel Deck:

a. ASC Profiles, Inc.
b. Canam Steel Corp.;The Canam Manac Group.
c. Consolidated Systems, Inc.
d. DACS, Inc.
e. D-Mac Industries Inc.
f. Epic Metals Corporation.
g. Marlyn Steel Decks, Inc.
h. New Millennium Building Systems, LLC.
i. Nucor Corp.; Vulcraft Division.
j. Roof Deck, Inc.
k. United Steel Deck, Inc.
l. Valley Joist; Division of EBSCO Industries, Inc.
m. Verco Manufacturing Co.
n. Wheeling Corrugating Company; Div. of Wheeling-Pittsburgh Steel Corporation.

2.2 ROOF DECK

A. Steel Roof Deck: Fabricate panels, without top-flange stiffening grooves, to comply with "SDI Specifications and Commentary for Steel Roof Deck," in SDI Publication No. 30, and with the following:

1. Prime-Painted Steel Sheet: ASTM A 1008/A 1008M, Structural Steel (SS), Grade 33 minimum, shop primed with manufacturer's standard baked-on, rust-inhibitive primer.

a. Color: Manufacturer's standard.

2. Galvanized Steel Sheet: ASTM A 653/A 653M, Structural Steel (SS), Grade 33, zinc coating.
3. Galvanized and Shop-Primed Steel Sheet: ASTM A 653, Structural Steel (SS), Grade 33, G60 zinc coating; cleaned, pretreated, and primed with manufacturer's standard baked-on, rust-inhibitive primer.

    a. Color: Manufacturer's standard.

4. Aluminum-Zinc Alloy-Coated Steel Sheet: ASTM A 792/A 792M, Structural Steel (SS), Grade 33 minimum, AZ50 aluminum-zinc alloy coating.
5. Deck Profile: As indicated.
6. Profile Depth: 1-1/2 inches.
7. Design Uncoated-Steel Thickness: As indicated.
8. Design Uncoated-Steel Thicknesses; Deck Unit/Bottom Plate: As indicated.
9. Span Condition: Triple span or more.
10. Side Laps: Overlapped.

2.3 ACOUSTICAL ROOF DECK

A. Acoustical Steel Roof Deck: Fabricate panels, without top-flange stiffening grooves, to comply with "SDI Specifications and Commentary for Steel Roof Deck," in SDI Publication No. 30, and with the following:

1. Prime-Painted Steel Sheet: ASTM A 1008/A 1008M, Structural Steel (SS), Grade 33 minimum, shop primed with manufacturer's standard baked-on, rust-inhibitive primer.

    a. Color: Manufacturer's standard.

2. Galvanized Steel Sheet: ASTM A 653/A 653M, Structural Steel (SS), Grade 33, zinc coating.
3. Galvanized and Shop-Primed Steel Sheet: ASTM A 653/A 653M, Structural Steel (SS), Grade 33, G60 zinc coating; cleaned, pretreated, and primed with manufacturer's standard baked-on, rust-inhibitive primer.

    a. Color: Manufacturer's standard.

4. Aluminum-Zinc Alloy-Coated Steel Sheet: ASTM A 792/A 792M, Structural Steel (SS), Grade 33 minimum, AZ50 aluminum-zinc alloy coating.
5. Deck Profile: As indicated.
6. Profile Depth: 1-1/2 inches.
7. Design Uncoated-Steel Thickness: As indicated.
8. Design Uncoated-Steel Thicknesses; Deck Unit/Bottom Plate: As indicated.
9. Span Condition: Triple span or more.
10. Side Laps: Overlapped.
11. Acoustical Perforations: Deck units with manufacturer's standard perforated vertical webs.
12. Sound-Absorbing Insulation: Manufacturer's standard premolded roll or strip of glass or mineral fiber.

    a. Factory install sound-absorbing insulation into cells of cellular deck.

b. Installation of sound-absorbing insulation is specified in Division 7.

2.4 ACCESSORIES

A. General: Provide manufacturer's standard accessory materials for deck that comply with requirements indicated.

B. Mechanical Fasteners: Corrosion-resistant, low-velocity, power-actuated or pneumatically driven carbon-steel fasteners; or self-drilling, self-threading screws.

C. Side-Lap Fasteners: Corrosion-resistant, hexagonal washer head; self-drilling, carbon-steel screws, No. 10 minimum diameter.

D. Flexible Closure Strips: Vulcanized, closed-cell, synthetic rubber.

E. Miscellaneous Sheet Metal Deck Accessories: Steel sheet, minimum yield strength of 33,000 psi, not less than 0.0359-inch design uncoated thickness, of same material and finish as deck; of profile indicated or required for application.

F. Pour Stops and Girder Fillers: Steel sheet, minimum yield strength of 33,000 psi, of same material and finish as deck, and of thickness and profile indicated.

G. Column Closures, End Closures, Z-Closures, and Cover Plates: Steel sheet, of same material, finish, and thickness as deck, unless otherwise indicated.

H. Piercing Hanger Tabs: Piercing steel sheet hanger attachment devices for use with floor deck.

I. Weld Washers: Uncoated steel sheet, shaped to fit deck rib, 0.0598 inch thick, with factory-punched hole of 3/8-inch minimum diameter.

J. Recessed Sump Pans: Single-piece steel sheet, 0.0747 inch thick, of same material and finish as deck, with 3-inch- wide flanges and level recessed pans of 1-1/2-inch minimum depth. For drains, cut holes in the field.

K. Flat Sump Plate: Single-piece steel sheet, 0.0747 inch thick, of same material and finish as deck. For drains, cut holes in the field.

L. Galvanizing Repair Paint: SSPC-Paint 20 or DOD-P-21035, with dry film containing a minimum of 94 percent zinc dust by weight.

M. Repair Paint: Manufacturer's standard rust-inhibitive primer of same color as primer.

PART 3 - EXECUTION

3.1 EXAMINATION

A. Examine supporting frame and field conditions for compliance with requirements for installation tolerances and other conditions affecting performance.

3.2 INSTALLATION, GENERAL

A. Install deck panels and accessories according to applicable specifications and commentary in SDI Publication No. 30, manufacturer's written instructions, and requirements in this Section.

B. Install temporary shoring before placing deck panels, if required to meet deflection limitations.

C. Locate deck bundles to prevent overloading of supporting members.

D. Place deck panels on supporting frame and adjust to final position with ends accurately aligned and bearing on supporting frame before being permanently fastened. Do not stretch or contract side-lap interlocks.

1. Align cellular deck panels over full length of cell runs and align cells at ends of abutting panels.

E. Place deck panels flat and square and fasten to supporting frame without warp or deflection.

F. Cut and neatly fit deck panels and accessories around openings and other work projecting through or adjacent to deck.

G. Provide additional reinforcement and closure pieces at openings as required for strength, continuity of deck, and support of other work.

H. Comply with AWS requirements and procedures for manual shielded metal arc welding, appearance and quality of welds, and methods used for correcting welding work.

I. Mechanical fasteners may be used in lieu of welding to fasten deck. Locate mechanical fasteners and install according to deck manufacturer's written instructions.

3.3 ROOF-DECK INSTALLATION

A. Fasten roof-deck panels to steel supporting members by arc spot (puddle) welds of the surface diameter indicated or arc seam welds with an equal perimeter that is not less than 1-1/2 inches long, and as follows:

1. Weld Diameter: 5/8 inch, nominal.
2. Weld Spacing: As shown on structural drawings.
3. Weld Washers: Install weld washers at each weld location.

B. Side-Lap and Perimeter Edge Fastening: Fasten side laps and perimeter edges of panels between supports, at intervals shown on structural drawings, and as follows:

1. Mechanically fasten with self-drilling, No. 10 diameter or larger, carbon-steel screws.
2. Mechanically clinch or button punch.
3. Fasten with a minimum of 1-1/2-inch- long welds.

C. End Bearing: Install deck ends over supporting frame with a minimum end bearing of 1-1/2 inches, with end joints as follows:

1. End Joints: Lapped 2 inches minimum.

D. Roof Sump Pans and Sump Plates: Install over openings provided in roof deck and weld flanges to top of deck. Space welds not more than 12 inches apart with at least one weld at each corner.

1. Install reinforcing channels or zees in ribs to span between supports and weld or mechanically fasten.

E. Miscellaneous Roof-Deck Accessories: Install ridge and valley plates, finish strips, end closures, and reinforcing channels according to deck manufacturer's written instructions. Weld to substrate to provide a complete deck installation.

1. Weld cover plates at changes in direction of roof-deck panels, unless otherwise indicated.

F. Flexible Closure Strips: Install flexible closure strips over partitions, walls, and where indicated. Install with adhesive according to manufacturer's written instructions to ensure complete closure.

G. Sound-Absorbing Insulation: Installation into topside ribs of deck as specified in Division 7.

3.4 FIELD QUALITY CONTROL

A. Testing Agency: Engage a qualified independent testing and inspecting agency to perform field tests and inspections and prepare test reports.

B. Field welds will be subject to inspection.

C. Testing agency will report inspection results promptly and in writing to Contractor and Architect.

D. Remove and replace work that does not comply with specified requirements.

E. Additional inspecting, at Contractor's expense, will be performed to determine compliance of corrected work with specified requirements.

3.5 REPAIRS AND PROTECTION

A. Galvanizing Repairs: Prepare and repair damaged galvanized coatings on both surfaces of deck with galvanized repair paint according to ASTM A 780 and manufacturer's written instructions.

B. Repair Painting: Wire brush and clean rust spots, welds, and abraded areas on both surfaces of prime-painted deck immediately after installation, and apply repair paint.

1. Apply repair paint, of same color as adjacent shop-primed deck, to bottom surfaces of deck exposed to view.
2. Wire brushing, cleaning, and repair painting of bottom deck surfaces are included in Division 9.

C. Repair Painting: Wire brushing, cleaning, and repair painting of rust spots, welds, and abraded areas of both deck surfaces are included in Division 9.

D. Provide final protection and maintain conditions to ensure that steel deck is without damage or deterioration at time of Substantial Completion.

END OF SECTION 05310

SECTION 05400
COLD-FORMED METAL FRAMING

PART 1 - GENERAL

1.1 RELATED DOCUMENTS

A. Drawings and general provisions of the Contract, including General and Supplementary Conditions and Division 1 Specification Sections, apply to this Section.

1.2 SUMMARY

A. This Section includes the following:

1. Exterior load-bearing wall framing.
2. Interior load-bearing wall framing.
3. Exterior non-load-bearing wall framing.
4. Floor joist framing.

B. Related Sections include the following:

1. Division 5 Section "Metal Fabrications" for masonry shelf angles and connections.
2. Division 9 Section "Gypsum Board Assemblies" for interior non-load-bearing, metal-stud framing and ceiling-suspension assemblies.

1.3 PERFORMANCE REQUIREMENTS

A. Structural Performance: Provide cold-formed metal framing capable of withstanding design loads within limits and under conditions indicated.

1. Design Loads: As indicated on structural drawings.

2. Deflection Limits: Design framing systems to withstand design loads without deflections greater than the following:

   a. Ceiling Joist Framing: Vertical deflection of 1/240 of the span.

3. Design framing systems to provide for movement of framing members without damage or overstressing, sheathing failure, connection failure, undue strain on fasteners and anchors, or other detrimental effects when subject to a maximum ambient temperature change of 120 deg F.

4. Design framing system to maintain clearances at openings, to allow for construction tolerances, and to accommodate live load deflection of primary building structure as follows:

   a. Upward and downward movement of 3/4 inch.

B. Cold-Formed Steel Framing, General: Design according to AISI's "Standard for Cold-Formed Steel Framing - General Provisions."

1. Headers: Design according to AISI's "Standard for Cold-Formed Steel Framing - Header Design."

1.4 SUBMITTALS

A. Product Data: For each type of cold-formed metal framing product and accessory indicated.

B. Shop Drawings: Show layout, spacings, sizes, thicknesses, and types of cold-formed metal framing; fabrication; and fastening and anchorage details, including mechanical fasteners. Show reinforcing channels, opening framing, supplemental framing, strapping, bracing, bridging, splices, accessories, connection details, and attachment to adjoining work.

1. For cold-formed metal framing indicated to comply with design loads, include structural analysis data signed and sealed by the qualified professional engineer responsible for their preparation.

C. Welding certificates.

D. Qualification Data: For testing agency.

E. Product Test Reports: From a qualified testing agency, unless otherwise stated, indicating that each of the following complies with requirements, based on evaluation of comprehensive tests for current products:

1. Steel sheet.
2. Expansion anchors.
3. Power-actuated anchors.
4. Mechanical fasteners.
5. Vertical deflection clips.
6. Horizontal drift deflection clips
7. Miscellaneous structural clips and accessories.

F. Research/Evaluation Reports: For cold-formed metal framing.

1.5 QUALITY ASSURANCE

A. Engineering Responsibility: Preparation of Shop Drawings, design calculations, and other structural data by a qualified professional engineer.

B. Professional Engineer Qualifications: A professional engineer who is legally qualified to practice in jurisdiction where Project is located and who is experienced in providing

engineering services of the kind indicated. Engineering services are defined as those performed for installations of cold-formed metal framing that are similar to those indicated for this Project in material, design, and extent.

C. Testing Agency Qualifications: An independent testing agency, acceptable to authorities having jurisdiction, qualified according to ASTM E 329 to conduct the testing indicated.

D. Product Tests: Mill certificates or data from a qualified independent testing agency, or in-house testing with calibrated test equipment indicating steel sheet complies with requirements, including base-metal thickness, yield strength, tensile strength, total elongation, chemical requirements, ductility, and metallic-coating thickness.

E. Welding: Qualify procedures and personnel according to AWS D1.1/D1.1M, "Structural Welding Code--Steel," and AWS D1.3, "Structural Welding Code--Sheet Steel."

F. Fire-Test-Response Characteristics: Where indicated, provide cold-formed metal framing identical to that of assemblies tested for fire resistance per ASTM E 119 by a testing and inspecting agency acceptable to authorities having jurisdiction.

G. AISI Specifications and Standards: Comply with AISI's "North American Specification for the Design of Cold-Formed Steel Structural Members" and its "Standard for Cold-Formed Steel Framing - General Provisions."

1. Comply with AISI's "Standard for Cold-Formed Steel Framing - Truss Design."
2. Comply with AISI's "Standard for Cold-Formed Steel Framing - Header Design."

H. Comply with AISI's "Standard for Cold-Formed Steel Framing - Prescriptive Method for One and Two Family Dwellings."

I. Preinstallation Conference: Conduct conference at Project site to comply with requirements in Division 1 Section "Project Management and Coordination."

1.6 DELIVERY, STORAGE, AND HANDLING

A. Protect cold-formed metal framing from corrosion, deformation, and other damage during delivery, storage, and handling.

B. Store cold-formed metal framing, protect with a waterproof covering, and ventilate to avoid condensation.

PART 2 - PRODUCTS

2.1 MANUFACTURERS

A. Available Manufacturers: Subject to compliance with requirements, manufacturers offering cold-formed metal framing that may be incorporated into the Work include, but are not limited to, the following:

1. Allied Studco.

2. AllSteel Products, Inc.
3. California Expanded Metal Products Company.
4. Clark Steel Framing.
5. Consolidated Fabricators Corp.; Building Products Division.
6. Craco Metals Manufacturing, LLC.
7. Custom Stud, Inc.
8. Dale/Incor.
9. Design Shapes in Steel.
10. Dietrich Metal Framing; a Worthington Industries Company.
11. Formetal Co. Inc. (The).
12. Innovative Steel Systems.
13. MarinoWare; a division of Ware Industries.
14. Quail Run Building Materials, Inc.
15. SCAFCO Corporation.
16. Southeastern Stud & Components, Inc.
17. Steel Construction Systems.
18. Steeler, Inc.
19. Super Stud Building Products, Inc.
20. United Metal Products, Inc.

2.2 MATERIALS

A. Steel Sheet: ASTM A 1003/A 1003M, Structural Grade, Type H, metallic coated, of grade and coating weight as follows:

1. Grade: As required by structural performance.
2. Coating: G90 or equivalent.

B. Steel Sheet for Vertical Deflection Clips: ASTM A 653/A 653M, structural steel, zinc coated, of grade and coating as follows:

1. Grade: As required by structural performance.
2. Coating: G90.

2.3 FRAMING ACCESSORIES

A. Fabricate steel-framing accessories from steel sheet, ASTM A 1003/A 1003M, Structural Grade, Type H, metallic coated, of same grade and coating weight used for framing members.

B. Provide accessories of manufacturer's standard thickness and configuration, unless otherwise indicated, as follows:

1. Supplementary framing.
2. Bracing, bridging, and solid blocking.
3. Web stiffeners.
4. Anchor clips.
5. End clips.
6. Foundation clips.
7. Gusset plates.

8. Stud kickers, knee braces, and girts.
9. Joist hangers and end closures.
10. Hole reinforcing plates.
11. Backer plates.

2.4 ANCHORS, CLIPS, AND FASTENERS

A. Steel Shapes and Clips: ASTM A 36/A 36M, zinc coated by hot-dip process according to ASTM A 123/A 123M.

B. Anchor Bolts: ASTM F 1554, Grade **[36]** **[55]**, threaded carbon-steel headless, hooked bolts and carbon-steel nuts; and flat, hardened-steel washers; zinc coated by hot-dip process according to ASTM A 153/A 153M, Class C.

C. Expansion Anchors: Fabricated from corrosion-resistant materials, with capability to sustain, without failure, a load equal to 5 times design load, as determined by testing per ASTM E 488 conducted by a qualified independent testing agency.

D. Power-Actuated Anchors: Fastener system of type suitable for application indicated, fabricated from corrosion-resistant materials, with capability to sustain, without failure, a load equal to 10 times design load, as determined by testing per ASTM E 1190 conducted by a qualified independent testing agency.

E. Mechanical Fasteners: ASTM C 1513, corrosion-resistant-coated, self-drilling, self-tapping steel drill screws.

1. Head Type: Low-profile head beneath sheathing, manufacturer's standard elsewhere.

F. Welding Electrodes: Comply with AWS standards.

2.5 MISCELLANEOUS MATERIALS

A. Galvanizing Repair Paint: SSPC-Paint 20.

B. Cement Grout: Portland cement, ASTM C 150, Type I; and clean, natural sand, ASTM C 404. Mix at ratio of 1 part cement to 2-1/2 parts sand, by volume, with minimum water required for placement and hydration.

C. Nonmetallic, Nonshrink Grout: Premixed, nonmetallic, noncorrosive, nonstaining grout containing selected silica sands, portland cement, shrinkage-compensating agents, and plasticizing and water-reducing agents, complying with ASTM C 1107, with fluid consistency and 30-minute working time.

D. Shims: Load bearing, high-density multimonomer plastic, nonleaching.

E. Sealer Gaskets: Closed-cell neoprene foam, 1/4 inch thick, selected from manufacturer's standard widths to match width of bottom track or rim track members.

2.6 FABRICATION

A. Fabricate cold-formed metal framing and accessories plumb, square, and true to line, and with connections securely fastened, according to referenced AISI's specifications and standards, manufacturer's written instructions, and requirements in this Section.

1. Fabricate framing assemblies using jigs or templates.
2. Cut framing members by sawing or shearing; do not torch cut.
3. Fasten cold-formed metal framing members by welding, screw fastening, clinch fastening, or riveting as standard with fabricator. Wire tying of framing members is not permitted.

    a. Comply with AWS D1.3 requirements and procedures for welding, appearance and quality of welds, and methods used in correcting welding work.
    b. Locate mechanical fasteners and install according to Shop Drawings, with screw penetrating joined members by not less than three exposed screw threads.

4. Fasten other materials to cold-formed metal framing by welding, bolting, or screw fastening, according to Shop Drawings.

B. Reinforce, stiffen, and brace framing assemblies to withstand handling, delivery, and erection stresses. Lift fabricated assemblies to prevent damage or permanent distortion.

C. Fabrication Tolerances: Fabricate assemblies level, plumb, and true to line to a maximum allowable tolerance variation of 1/8 inch in 10 feet and as follows:

1. Spacing: Space individual framing members no more than plus or minus 1/8 inch from plan location. Cumulative error shall not exceed minimum fastening requirements of sheathing or other finishing materials.
2. Squareness: Fabricate each cold-formed metal framing assembly to a maximum out-of-square tolerance of 1/8 inch.

PART 3 - EXECUTION

3.1 EXAMINATION

A. Examine supporting substrates and abutting structural framing for compliance with requirements for installation tolerances and other conditions affecting performance.

1. Proceed with installation only after unsatisfactory conditions have been corrected.

3.2 PREPARATION

A. Before sprayed fire-resistive materials are applied, attach continuous angles, supplementary framing, or tracks to structural members indicated to receive sprayed fire-resistive materials.

B. After applying sprayed fire-resistive materials, remove only as much of these materials as needed to complete installation of cold-formed framing without reducing thickness of fire-

resistive materials below that are required to obtain fire-resistance rating indicated. Protect remaining fire-resistive materials from damage.

C. Install load bearing shims or grout between the underside of wall bottom track or rim track and the top of foundation wall or slab at stud or joist locations to ensure a uniform bearing surface on supporting concrete or masonry construction.

D. Install sealer gaskets to isolate the underside of wall bottom track or rim track and the top of foundation wall or slab at stud or joist locations.

3.3 INSTALLATION, GENERAL

A. Cold-formed metal framing may be shop or field fabricated for installation, or it may be field assembled.

B. Install cold-formed metal framing according to AISI's "Standard for Cold-Formed Steel Framing - General Provisions" and to manufacturer's written instructions unless more stringent requirements are indicated.

C. Install shop- or field-fabricated, cold-formed framing and securely anchor to supporting structure.

1. Screw, bolt, or weld wall panels at horizontal and vertical junctures to produce flush, even, true-to-line joints with maximum variation in plane and true position between fabricated panels not exceeding 1/16 inch.

D. Install cold-formed metal framing and accessories plumb, square, and true to line, and with connections securely fastened.

1. Cut framing members by sawing or shearing; do not torch cut.
2. Fasten cold-formed metal framing members by welding, screw fastening, clinch fastening, or riveting. Wire tying of framing members is not permitted.

    a. Comply with AWS D1.3 requirements and procedures for welding, appearance and quality of welds, and methods used in correcting welding work.
    b. Locate mechanical fasteners and install according to Shop Drawings, and complying with requirements for spacing, edge distances, and screw penetration.

E. Install framing members in one-piece lengths unless splice connections are indicated for track or tension members.

F. Install temporary bracing and supports to secure framing and support loads comparable in intensity to those for which structure was designed. Maintain braces and supports in place, undisturbed, until entire integrated supporting structure has been completed and permanent connections to framing are secured.

G. Do not bridge building expansion and control joints with cold-formed metal framing. Independently frame both sides of joints.

H. Install insulation, specified in Division 7 Section "Building Insulation," in built-up exterior framing members, such as headers, sills, boxed joists, and multiple studs at openings, that are inaccessible on completion of framing work.

I. Fasten hole reinforcing plate over web penetrations that exceed size of manufacturer's standard punched openings.

J. Erection Tolerances: Install cold-formed metal framing level, plumb, and true to line to a maximum allowable tolerance variation of 1/8 inch in 10 feet and as follows:

1. Space individual framing members no more than plus or minus 1/8 inch from plan location. Cumulative error shall not exceed minimum fastening requirements of sheathing or other finishing materials.

3.4 FIELD QUALITY CONTROL

A. Testing: Owner will engage a qualified independent testing and inspecting agency to perform field tests and inspections and prepare test reports.

B. Field and shop welds will be subject to testing and inspecting.

C. Testing agency will report test results promptly and in writing to Contractor and Architect.

D. Remove and replace work where test results indicate that it does not comply with specified requirements.

E. Additional testing and inspecting, at Contractor's expense, will be performed to determine compliance of replaced or additional work with specified requirements.

3.5 REPAIRS AND PROTECTION

A. Galvanizing Repairs: Prepare and repair damaged galvanized coatings on fabricated and installed cold-formed metal framing with galvanized repair paint according to ASTM A 780 and manufacturer's written instructions.

B. Provide final protection and maintain conditions, in a manner acceptable to manufacturer and Installer, that ensure that cold-formed metal framing is without damage or deterioration at time of Substantial Completion.

END OF SECTION 05400

SECTION 06105
MISCELLANEOUS CARPENTRY

PART 1 - GENERAL

1.1 RELATED DOCUMENTS

A. Drawings and general provisions of the Contract, including General and Supplementary Conditions and Division 1 Specification Sections, apply to this Section.

1.2 SUMMARY

A. This Section includes the following:

1. Rooftop equipment bases and support curbs.
2. Wood blocking, cants, and nailers.
3. Wood furring and grounds.

1.3 DEFINITIONS

A. Dimension Lumber: Lumber of 2 inches nominal or greater but less than 5 inches nominal in least dimension.

B. Lumber grading agencies, and the abbreviations used to reference them, include the following:

1. NeLMA: Northeastern Lumber Manufacturers' Association.
2. NHLA: National Hardwood Lumber Association.
3. NLGA: National Lumber Grades Authority.
4. SPIB: The Southern Pine Inspection Bureau.
5. WCLIB: West Coast Lumber Inspection Bureau.
6. WWPA: Western Wood Products Association.

1.4 SUBMITTALS

A. Research/Evaluation Reports: For the following, showing compliance with building code in effect for Project:

1. Preservative-treated wood.
2. Fire-retardant-treated wood.

1.5 QUALITY ASSURANCE

A. Forest Certification: For the following wood products, provide materials produced from wood obtained from forests certified by an FSC-accredited certification body to comply with FSC 1.2, "Principles and Criteria":

1. Dimension lumber framing.
2. Miscellaneous lumber.

1.6 DELIVERY, STORAGE, AND HANDLING

A. Stack lumber flat with spacers between each bundle to provide air circulation. Provide for air circulation around stacks and under coverings.

B. Deliver interior wood materials that are to be exposed to view only after building is enclosed and weatherproof, wet work other than painting is dry, and HVAC system is operating and maintaining temperature and humidity at occupancy levels.

PART 2 - PRODUCTS

2.1 WOOD PRODUCTS, GENERAL

A. Lumber: DOC PS 20 and applicable rules of grading agencies indicated. If no grading agency is indicated, provide lumber that complies with the applicable rules of any rules-writing agency certified by the ALSC Board of Review. Provide lumber graded by an agency certified by the ALSC Board of Review to inspect and grade lumber under the rules indicated.

1. Factory mark each piece of lumber with grade stamp of grading agency.
2. Where nominal sizes are indicated, provide actual sizes required by DOC PS 20 for moisture content specified. Where actual sizes are indicated, they are minimum dressed sizes for dry lumber.
3. Provide dressed lumber, S4S, unless otherwise indicated.

2.2 WOOD-PRESERVATIVE-TREATED MATERIALS

A. Preservative Treatment by Pressure Process: AWPA C2.

1. Preservative Chemicals: Acceptable to authorities having jurisdiction and containing no arsenic or chromium.

B. Kiln-dry lumber after treatment to a maximum moisture content of 19 percent. Do not use material that is warped or does not comply with requirements for untreated material.

C. Mark lumber with treatment quality mark of an inspection agency approved by the ALSC Board of Review.

D. Application: Treat items indicated on Drawings, and the following:

1. Wood cants, nailers, curbs, equipment support bases, blocking, stripping, and similar members in connection with roofing, flashing, vapor barriers, and waterproofing.
2. Wood sills, sleepers, blocking and similar concealed members in contact with masonry or concrete.
3. Wood framing and furring attached directly to the interior of below-grade exterior masonry or concrete walls.

2.3 FIRE-RETARDANT-TREATED MATERIALS

A. General: Comply with performance requirements in AWPA C20 (lumber) and AWPA C27 (plywood).

1. Use treatment that does not promote corrosion of metal fasteners.
2. Use Exterior type for exterior locations and where indicated.
3. Use Interior Type A, unless otherwise indicated.

B. Identify fire-retardant-treated wood with appropriate classification marking of testing and inspecting agency acceptable to authorities having jurisdiction.

C. Application: Treat items indicated on Drawings, and the following:

1. Concealed blocking.
2. Plywood backing panels.

2.4 MISCELLANEOUS LUMBER

A. General: Provide miscellaneous lumber indicated and lumber for support or attachment of other construction, including the following:

1. Blocking.
2. Nailers.
3. Rooftop equipment bases and support curbs.
4. Cants.
5. Furring.
6. Grounds.
7. Utility shelving.

B. For items of dimension lumber size, provide Standard, Stud, or No. 3 grade lumber with 19 percent maximum moisture content of any species.

C. For items of dimension lumber size, provide Standard, Stud, or No. 3 grade lumber with 19 percent maximum moisture content and any of the following species:

1. Hem-fir (north); NLGA.
2. Mixed southern pine; SPIB.
3. Spruce-pine-fir; NLGA.
4. Hem-fir; WCLIB, or WWPA.
5. Spruce-pine-fir (south); NeLMA, WCLIB, or WWPA.
6. Western woods; WCLIB or WWPA.

7. Northern species; NLGA.
8. Eastern softwoods; NeLMA.

D. For blocking not used for attachment of other construction Utility, Stud, or No. 3 grade lumber of any species may be used provided that it is cut and selected to eliminate defects that will interfere with its attachment and purpose.

E. For blocking and nailers used for attachment of other construction, select and cut lumber to eliminate knots and other defects that will interfere with attachment of other work.

F. For furring strips for installing plywood or hardboard paneling, select boards with no knots capable of producing bent-over nails and damage to paneling.

2.5 PLYWOOD BACKING PANELS

A. Telephone and Electrical Equipment Backing Panels: DOC PS 1, Exposure 1, C-D Plugged, fire-retardant treated, 3/4-inch nominal thickness.

2.6 FASTENERS

A. General: Provide fasteners of size and type indicated that comply with requirements specified in this Article for material and manufacture.

1. Where carpentry is exposed to weather, in ground contact, pressure-preservative treated, or in area of high relative humidity, provide fasteners with hot-dip zinc coating complying with ASTM A 153/A 153M.
2. All fasteners used in contact with non-arsenic treated lumber must be double dipped galvanized or stainless steel in compliance with lumber manufacturer's requirements and all applicable codes. Other corrosive resistant finishes may be used if approved by lumber manufacturer and submitted and approved by the architect.

B. Nails, Brads, and Staples: ASTM F 1667.

C. Power-Driven Fasteners: NES NER-272.

D. Wood Screws: ASME B18.6.1.

E. Screws for Fastening to Cold-Formed Metal Framing: ASTM C 954, except with wafer heads and reamer wings, length as recommended by screw manufacturer for material being fastened.

F. Lag Bolts: ASME B18.2.1.

G. Bolts: Steel bolts complying with ASTM A 307, Grade A; with ASTM A 563 hex nuts and, where indicated, flat washers.

H. Expansion Anchors: Anchor bolt and sleeve assembly of material indicated below with capability to sustain, without failure, a load equal to 6 times the load imposed when installed in unit masonry assemblies and equal to 4 times the load imposed when installed in concrete as determined by testing per ASTM E 488 conducted by a qualified independent testing and inspecting agency.

1. Material: Stainless steel with bolts and nuts complying with ASTM F 593 and ASTM F 594, Alloy Group 1 or 2.

PART 3 - EXECUTION

3.1 INSTALLATION, GENERAL

A. Set carpentry to required levels and lines, with members plumb, true to line, cut, and fitted. Fit carpentry to other construction; scribe and cope as needed for accurate fit. Locate furring, nailers, blocking, grounds, and similar supports to comply with requirements for attaching other construction.

B. Framing Standard: Comply with AF&PA's "Details for Conventional Wood Frame Construction," unless otherwise indicated.

C. Metal Framing Anchors: Install metal framing to comply with manufacturer's written instructions.

D. Do not splice structural members between supports, unless otherwise indicated.

E. Provide blocking and framing as indicated and as required to support facing materials, fixtures, specialty items, and trim.

1. Provide metal clips for fastening gypsum board or lath at corners and intersections where framing or blocking does not provide a surface for fastening edges of panels. Space clips not more than 16 inches o.c.

F. Provide fire blocking in furred spaces, stud spaces, and other concealed cavities as indicated and as follows:

1. Fire block furred spaces of walls, at each floor level, at ceiling, and at not more than 96 inches o.c. with solid wood blocking or noncombustible materials accurately fitted to close furred spaces.
2. Fire block concealed spaces of wood-framed walls and partitions at each floor level, at ceiling line of top story, and at not more than 96 inches o.c. Where fire blocking is not inherent in framing system used, provide closely fitted solid wood blocks of same width as framing members and 2-inch nominal- thickness.
3. Fire block concealed spaces between floor sleepers with same material as sleepers to limit concealed spaces to not more than 100 sq. ft. and to solidly fill space below partitions.
4. Fire block concealed spaces behind combustible cornices and exterior trim at not more than 20 feet o.c.

G. Sort and select lumber so that natural characteristics will not interfere with installation or with fastening other materials to lumber. Do not use materials with defects that interfere with function of member or pieces that are too small to use with minimum number of joints or optimum joint arrangement.

H. Comply with AWPA M4 for applying field treatment to cut surfaces of preservative-treated lumber.

1. Use inorganic boron for items that are continuously protected from liquid water.
2. Use copper naphthenate for items not continuously protected from liquid water.

I. Securely attach carpentry work to substrate by anchoring and fastening as indicated, complying with the following:

1. Table 2304.9.1, "Fastening Schedule," in ICC's International Building Code.

3.2 WOOD GROUND, SLEEPER, BLOCKING, AND NAILER INSTALLATION

A. Install where indicated and where required for screeding or attaching other work. Form to shapes indicated and cut as required for true line and level of attached work. Coordinate locations with other work involved.

B. Attach items to substrates to support applied loading. Recess bolts and nuts flush with surfaces, unless otherwise indicated.

C. Provide permanent grounds of dressed, pressure-preservative-treated, key-beveled lumber not less than 1-1/2 inches wide and of thickness required to bring face of ground to exact thickness of finish material. Remove temporary grounds when no longer required.

END OF SECTION 06105

SECTION 07210
BUILDING INSULATION

PART 1 - GENERAL

1.1 RELATED DOCUMENTS

A. Drawings and general provisions of the Contract, including General and Supplementary Conditions and Division 1 Specification Sections, apply to this Section.

1.2 SUMMARY

A. This Section includes the following:

1. Perimeter wall insulation (supporting backfill).
2. Concealed building insulation.
3. Exposed building insulation.
4. Sound attenuation insulation.

B. Related Sections include the following:

1. Division 4 Section "Unit Masonry Assemblies" for insulation installed in cavity walls and masonry cells.
2. Division 7 Section "Roofing SBS-Modified Bituminous Membrane Roofing for insulation specified as part of roofing construction.
3. Division 7 Section "Fire-Resistive Joint Systems" for insulation installed as part of a perimeter fire-resistive joint system.
4. Division 9 Section "Gypsum Board Assemblies" for installation in metal-framed assemblies of insulation specified by referencing this Section.
5. Division 15 Section "Mechanical Insulation."

1.3 DEFINITIONS

A. Mineral-Fiber Insulation: Insulation composed of rock-wool fibers, slag-wool fibers, or glass fibers; produced in boards and blanket with latter formed into batts (flat-cut lengths) or rolls.

1.4 PERFORMANCE REQUIREMENTS

A. Plenum Rating: Provide glass-fiber insulation where indicated in ceiling plenums whose test performance is rated as follows for use in plenums as determined by testing identical products per "Erosion Test" and "Mold Growth and Humidity Test" described in UL 181, or on comparable tests from another standard acceptable to authorities having jurisdiction.

1. Erosion Test Results: Insulation shows no visible evidence of cracking, flaking, peeling, or delamination of interior surface of duct assembly, after testing for 4 hours at 2500-fpm air velocity.
2. Mold Growth and Humidity Test Results: Insulation shows no evidence of mold growth, delamination, or other deterioration due to the effects of high humidity, after inoculation with Chaetomium globosium on all surfaces and storing for 60 days at 100 percent relative humidity in the dark.

1.5 SUBMITTALS

A. Product Data: For each type of product indicated.

B. Product Test Reports: Based on evaluation of comprehensive tests performed by a qualified testing agency for insulation products.

C. Research/Evaluation Reports: For foam-plastic insulation.

1.6 QUALITY ASSURANCE

A. Source Limitations: Obtain each type of building insulation through one source from a single manufacturer.

B. Fire-Test-Response Characteristics: Provide insulation and related materials with the fire-test-response characteristics indicated, as determined by testing identical products per test method indicated below by UL or another testing and inspecting agency acceptable to authorities having jurisdiction. Identify materials with appropriate markings of applicable testing and inspecting agency.

1. Surface-Burning Characteristics: ASTM E 84.
2. Fire-Resistance Ratings: ASTM E 119.
3. Combustion Characteristics: ASTM E 136.

1.7 DELIVERY, STORAGE, AND HANDLING

A. Protect insulation materials from physical damage and from deterioration by moisture, soiling, and other sources. Store inside and in a dry location. Comply with manufacturer's written instructions for handling, storing, and protecting during installation.

B. Protect plastic insulation as follows:

1. Do not expose to sunlight, except to extent necessary for period of installation and concealment.
2. Protect against ignition at all times. Do not deliver plastic insulating materials to Project site before installation time.
3. Complete installation and concealment of plastic materials as rapidly as possible in each area of construction.

PART 2 - PRODUCTS

2.1 MANUFACTURERS

A. In other Part 2 articles where titles below introduce lists, the following requirements apply to product selection:

1. Available Products: Subject to compliance with requirements, products that may be incorporated into the Work include, but are not limited to, products specified.
2. Available Manufacturers: Subject to compliance with requirements, manufacturers offering products that may be incorporated into the Work include, but are not limited to, manufacturers specified.

2.2 FOAM-PLASTIC BOARD INSULATION

A. Extruded-Polystyrene Board Insulation: ASTM C 578, of type and density indicated below, with maximum flame-spread and smoke-developed indexes of 75 and 450, respectively:

1. Available Manufacturers:

a. DiversiFoam Products.
b. Dow Chemical Company.
c. Owens Corning.
d. Pactiv Building Products Division.

2. Type V, 3.00 lb/cu. ft.

2.3 SLAG-WOOL-FIBER/ROCK-WOOL-FIBER BLANKET INSULATION

A. Available Manufacturers:

1. Fibrex Insulations Inc.
2. Owens Corning.
3. Thermafiber.

B. Unfaced, Slag-Wool-Fiber/Rock-Wool-Fiber Blanket Insulation: ASTM C 665, Type I (blankets without membrane facing); consisting of fibers; with maximum flame-spread and smoke-developed indexes of 25 and 50, respectively; passing ASTM E 136 for combustion characteristics.

2.4 GLASS-FIBER BLANKET INSULATION

A. Available Manufacturers:

1. CertainTeed Corporation.
2. Guardian Fiberglass, Inc.
3. Johns Manville.
4. Knauf Fiber Glass.

5. Owens Corning.

B. Unfaced, Glass-Fiber Blanket Insulation: ASTM C 665, Type I (blankets without membrane facing); consisting of fibers; with maximum flame-spread and smoke-developed indexes of 25 and 50, respectively; passing ASTM E 136 for combustion characteristics.

C. Where glass-fiber blanket insulation is indicated by the following thicknesses, provide blankets in batt or roll form with thermal resistances indicated:

1. 3-5/8 inches thick with a thermal resistance of 11 deg F x h x sq. ft./Btu at 75 deg F.
2. 5-1/2 inches thick with a thermal resistance of 21 deg F x h x sq. ft./Btu at 75 deg F.

2.5 AUXILIARY INSULATING MATERIALS

A. Vapor-Retarder Tape: Pressure-sensitive tape of type recommended by insulation manufacturers for sealing joints and penetrations in vapor-retarder facings.

B. Adhesive for Bonding Insulation: Product with demonstrated capability to bond insulation securely to substrates indicated without damaging insulation and substrates.

2.6 INSULATION FASTENERS

A. Adhesively Attached, Spindle-Type Anchors: Plate welded to projecting spindle; capable of holding insulation of thickness indicated securely in position indicated with self-locking washer in place; and complying with the following requirements:

1. Products:

   a. AGM Industries, Inc.; Series T TACTOO Insul-Hangers.
   b. Eckel Industries of Canada; Stic-Klip Type N Fasteners.
   c. Gemco; Spindle Type.

2. Plate: Perforated galvanized carbon-steel sheet, 0.030 inch thick by 2 inches square.
3. Spindle: Copper-coated, low carbon steel; fully annealed; 0.105 inch in diameter; length to suit depth of insulation indicated.

B. Anchor Adhesive: Product with demonstrated capability to bond insulation anchors securely to substrates indicated without damaging insulation, fasteners, and substrates.

1. Products:

   a. AGM Industries, Inc.; TACTOO Adhesive.
   b. Eckel Industries of Canada; Stic-Klip Type S Adhesive.
   c. Gemco; Tuff Bond Hanger Adhesive.

PART 3 - EXECUTION

3.1 EXAMINATION

A. Examine substrates and conditions, with Installer present, for compliance with requirements of Sections in which substrates and related work are specified and for other conditions affecting performance.

1. Proceed with installation only after unsatisfactory conditions have been corrected.

3.2 PREPARATION

A. Clean substrates of substances harmful to insulation or vapor retarders, including removing projections capable of puncturing vapor retarders or of interfering with insulation attachment.

3.3 INSTALLATION, GENERAL

A. Comply with insulation manufacturer's written instructions applicable to products and application indicated.

B. Install insulation that is undamaged, dry, and unsoiled and that has not been left exposed at any time to ice, rain, and snow.

C. Extend insulation in thickness indicated to envelop entire area to be insulated. Cut and fit tightly around obstructions and fill voids with insulation. Remove projections that interfere with placement.

D. Water-Piping Coordination: If water piping is located within insulated exterior walls, coordinate location of piping to ensure that it is placed on warm side of insulation and insulation encapsulates piping.

3.4 INSTALLATION OF PERIMETER INSULATION

A. On vertical surfaces, set insulation units in adhesive applied according to manufacturer's written instructions. Use adhesive recommended by insulation manufacturer.

1. If not otherwise indicated, extend insulation a minimum of 24 inches below exterior grade line.

B. Protect below-grade insulation on vertical surfaces from damage during backfilling by applying protection course with joints butted. Set in adhesive according to insulation manufacturer's written instructions.

C. Protect top surface of horizontal insulation from damage during concrete work by applying protection course with joints butted.

3.5 INSTALLATION OF GENERAL BUILDING INSULATION

A. Apply insulation units to substrates by method indicated, complying with manufacturer's written instructions. If no specific method is indicated, bond units to substrate with adhesive or use mechanical anchorage to provide permanent placement and support of units.

B. Seal joints between foam-plastic insulation units by applying adhesive, mastic, or sealant to edges of each unit to form a tight seal as units are shoved into place. Fill voids in completed installation with adhesive, mastic, or sealant as recommended by insulation manufacturer.

C. Stuff glass-fiber loose-fill insulation into miscellaneous voids and cavity spaces where shown. Compact to approximately 40 percent of normal maximum volume equaling a density of approximately 2.5 lb/cu. ft..

3.6 INSTALLATION OF VAPOR RETARDERS

A. General: Extend vapor retarder to extremities of areas to be protected from vapor transmission. Secure in place with adhesives or other anchorage system as indicated. Extend vapor retarder to cover miscellaneous voids in insulated substrates, including those filled with loose-fiber insulation.

B. Seal vertical joints in vapor retarders over framing by lapping not less than two wall studs. Fasten vapor retarders to wood framing at top, end, and bottom edges; at perimeter of wall openings; and at lap joints. Space fasteners 16 inches o.c.

C. Before installing vapor retarder, apply urethane sealant to flanges of metal framing including runner tracks, metal studs, and framing around door and window openings. Seal overlapping joints in vapor retarders with vapor-retarder tape according to vapor-retarder manufacturer's written instructions. Seal butt joints with vapor-retarder tape. Locate all joints over framing members or other solid substrates.

D. Firmly attach vapor retarders to metal framing and solid substrates with vapor-retarder fasteners as recommended by vapor-retarder manufacturer.

E. Seal joints caused by pipes, conduits, electrical boxes, and similar items penetrating vapor retarders with vapor-retarder tape to create an airtight seal between penetrating objects and vapor retarder.

F. Repair tears or punctures in vapor retarders immediately before concealment by other work. Cover with vapor-retarder tape or another layer of vapor retarder.

3.7 PROTECTION

A. Protect installed insulation and vapor retarders from damage due to harmful weather exposures, physical abuse, and other causes. Provide temporary coverings or enclosures where insulation is subject to abuse and cannot be concealed and protected by permanent construction immediately after installation.

END OF SECTION 07210

SECTION 07412
METAL WALL PANELS

PART 1 - GENERAL

1.1 RELATED DOCUMENTS

A. Drawings and general provisions of the Contract, including General and Supplementary Conditions and Division 1 Specification Sections, apply to this Section.

1.2 SUMMARY

A. This Section includes the following:

1. Metal-faced composite wall panels.

B. Related Sections include the following:

1. Division 5 Section "Cold-Formed Metal Framing" for secondary support framing supporting metal wall panels.
2. Division 7 Section "Manufactured Roof Specialties" for fasciae and copings not part of metal wall panel assemblies.
3. Division 7 Section "Joint Sealants" for field-applied sealants not otherwise specified in this Section.
4. Division 8 Section "Glazing" for insulated metal panels in existing and new window and storefront framing systems.

1.3 DEFINITIONS

A. Metal Wall Panel Assembly: Metal wall panels, attachment system components, miscellaneous metal framing, thermal insulation, and accessories necessary for a complete weathertight system.

B. Steel Sheet Thickness: Minimum thickness of base metal without metallic coatings or painted finishes.

1.4 PERFORMANCE REQUIREMENTS

A. General: Provide metal wall panel assemblies that comply with performance requirements specified as determined by testing manufacturers' standard assemblies similar to those indicated for this Project, by a qualified testing and inspecting agency.

B. Air Infiltration: Air leakage through assembly of not more than 0.06 cfm/sq. ft. of wall area when tested according to ASTM E 283 at a static-air-pressure difference of 6.24 lbf/sq. ft.

C. Water Penetration: No water penetration when tested according to ASTM E 331 at a minimum differential pressure of 20 percent of inward-acting, wind-load design pressure of not less than 6.24 lbf/sq. ft. and not more than 12 lbf/sq. ft..

D. Water Absorption: Maximum 1.0 percent absorption rate by volume when tested according to ASTM C 209.

E. Structural Performance: Provide metal wall panel assemblies capable of withstanding the effects of gravity loads and the following loads and stresses within limits and under conditions indicated, based on testing according to [ASTM E 1592] [ASTM E 330]:

1. Wind Loads: Determine loads based on the following minimum design wind pressures:

a. Uniform pressure as indicated on Drawings.

2. Deflection Limits: Engineer metal wall panel assemblies to withstand test pressures with deflection no greater than 1/240 of the span and no evidence of material failure, structural distress, or permanent deformation exceeding 0.2 percent of the clear span.

a. Test Pressures: 150 percent of inward and outward wind-load design pressures.

F. Thermal Movements: Provide metal wall panel assemblies that allow for thermal movements resulting from the following maximum change (range) in ambient and surface temperatures by preventing buckling, opening of joints, overstressing of components, failure of joint sealants, failure of connections, and other detrimental effects. Base engineering calculation on surface temperatures of materials due to both solar heat gain and nighttime-sky heat loss.

1. Temperature Change (Range): 120 deg F, ambient; 180 deg F, material surfaces.

G. Thermal Movements for Metal-Faced Composite Wall Panels: Provide composite wall panel assemblies that allow for noiseless thermal movements resulting from the following range in ambient temperatures and that prevent buckling, opening of joints, overstressing of components, failure of joint sealants, failure of connections, and other detrimental effects:

1. Ambient Temperature Range: Minus 20 to plus 180 deg F.

1.5 SUBMITTALS

A. Product Data: Include construction details, material descriptions, dimensions of individual components and profiles, and finishes for each type of metal wall panel and accessory.

B. Shop Drawings: Show fabrication and installation layouts of metal wall panels; details of edge conditions, joints, panel profiles, corners, anchorages, attachment system, trim, flashings, closures, and accessories; and special details. Distinguish between factory- and field-assembled work.

1. Accessories: Include details of the following items, at a scale of not less than 1-1/2 inches per 12 inches:

a. Flashing and trim.

2. For installed products indicated to comply with design loads, include structural analysis data signed and sealed by the qualified professional engineer responsible for their preparation.

C. Samples for Verification: For each type of exposed finish required, prepared on Samples of size indicated below.

1. Metal Wall Panels: 12 inches long by actual panel width. Include fasteners, closures, and other metal wall panel accessories.

a. Include four-way joint for composite panels.

2. Trim and Closures: 12 inches long. Include fasteners and other exposed accessories.

D. Maintenance Data: For metal wall panels to include in maintenance manuals.

E. Warranties: Special warranties specified in this Section.

1.6 QUALITY ASSURANCE

A. Installer Qualifications: An employer of workers trained and approved by manufacturer.

1. Installer's responsibilities include fabricating and installing metal wall panel assemblies and providing professional engineering services needed to assume engineering responsibility.
2. Engineering Responsibility: Preparation of data for metal wall panels, including Shop Drawings, based on testing and engineering analysis of manufacturer's standard units in assemblies similar to those indicated for this Project.

B. Fabricator Qualifications: Certified by metal-faced composite wall panel manufacturer to fabricate and install manufacturer's wall panel system.

C. Source Limitations: Obtain each type of metal wall panel through one source from a single manufacturer.

D. Product Options: Drawings indicate size, profiles, and dimensional requirements of metal wall panels and are based on the specific system indicated. Refer to Division 1 Section "Product Requirements."

1. Do not modify intended aesthetic effects, as judged solely by Architect, except with Architect's approval. If modifications are proposed, submit comprehensive explanatory data to Architect for review.

1.7 DELIVERY, STORAGE, AND HANDLING

A. Deliver components, sheets, metal wall panels, and other manufactured items so as not to be damaged or deformed. Package metal wall panels for protection during transportation and handling.

B. Unload, store, and erect metal wall panels in a manner to prevent bending, warping, twisting, and surface damage.

C. Stack metal wall panels horizontally on platforms or pallets, covered with suitable weathertight and ventilated covering. Store metal wall panels to ensure dryness, with positive slope for drainage of water. Do not store metal wall panels in contact with other materials that might cause staining, denting, or other surface damage.

D. Protect strippable protective covering on metal wall panels from exposure to sunlight and high humidity, except to extent necessary for period of metal wall panel installation.

1.8 PROJECT CONDITIONS

A. Weather Limitations: Proceed with installation only when existing and forecasted weather conditions permit assembly of metal wall panels to be performed according to manufacturers' written instructions and warranty requirements.

B. Field Measurements: Verify locations of structural members and wall opening dimensions by field measurements before metal wall panel fabrication and indicate measurements on Shop Drawings.

1.9 COORDINATION

A. Coordinate metal wall panel assemblies with rain drainage work, flashing, trim, and construction of girts, soffits, and other adjoining work to provide a leakproof, secure, and noncorrosive installation.

1.10 WARRANTY

A. Special Warranty: Manufacturer's standard form in which manufacturer agrees to repair or replace components of metal wall panel assemblies that fail in materials or workmanship within specified warranty period.

1. Failures include, but are not limited to, the following:

    a. Structural failures, including rupturing, cracking, or puncturing.
    b. Deterioration of metals, metal finishes, and other materials beyond normal weathering.

2. Warranty Period: Two years from date of Substantial Completion.

B. Special Warranty on Panel Finishes: Manufacturer's standard form in which manufacturer agrees to repair finish or replace metal wall panels that show evidence of deterioration of factory-applied finishes within specified warranty period.

1. Fluoropolymer Finish: Deterioration includes, but is not limited to, the following:

    a. Color fading more than 5 Hunter units when tested according to ASTM D 2244.
    b. Chalking in excess of a No. 8 rating when tested according to ASTM D 4214.
    c. Cracking, checking, peeling, or failure of paint to adhere to bare metal.

2. Finish Warranty Period: 20 years from date of Substantial Completion.

C. Special Weathertightness Warranty: Manufacturer's standard form in which manufacturer agrees to repair or replace metal wall panel assemblies that fail to remain weathertight, including leaks, within specified warranty period.

1. Weathertight Warranty Period: Five years from date of Substantial Completion.

PART 2 - PRODUCTS

2.1 MANUFACTURERS

A. In other Part 2 articles where titles below introduce lists, the following requirements apply for product selection:

1. Manufacturers: Subject to compliance with requirements, provide products by the manufacturers specified.

2.2 PANEL MATERIALS

A. Aluminum Sheet: Coil-coated sheet, ASTM B 209, alloy as standard with manufacturer, with temper as required to suit forming operations and structural performance required.

1. Exposed Finishes: Apply the following coating, as specified or indicated on Drawings.

a. High-Performance Organic Finish: AA-C12C42R1x (Chemical Finish: cleaned with inhibited chemicals; Chemical Finish: acid-chromate-fluoride-phosphate conversion coating; Organic Coating: as specified below). Prepare, pretreat, and apply coating to exposed metal surfaces to comply with coating and resin manufacturers' written instructions.

1) Fluoropolymer Two-Coat System: Manufacturer's standard two-coat, thermocured system consisting of specially formulated inhibitive primer and fluoropolymer color topcoat containing not less than 70 percent polyvinylidene fluoride resin by weight; complying with AAMA 2604.

2. Concealed Finish: Apply pretreatment and manufacturer's standard white or light-colored acrylic or polyester backer finish, consisting of prime coat and wash coat with a minimum total dry film thickness of 0.5 mil.

B. Aluminum Extrusions: ASTM B 221, alloy and temper recommended by manufacturer for type of use and finish indicated.

C. Panel Sealants:

1. Joint Sealant: ASTM C 920; elastomeric polyurethane, polysulfide, or silicone sealant; of type, grade, class, and use classifications required to seal joints in metal wall panels and remain weathertight; and as recommended in writing by metal wall panel manufacturer.

2.3 THERMAL INSULATION FOR FIELD-ASSEMBLED METAL WALL PANELS

A. Refer to Division 7 Section "Building Insulation."

2.4 SUBSTRATE BOARDS

A. ½" exterior grade plywood.

B. Substrate-Board Fasteners: Factory-coated steel fasteners and metal or plastic plates complying with corrosion-resistance provisions in FMG 4470, designed for fastening substrate board to substrate.

2.5 MISCELLANEOUS METAL FRAMING

A. Steel Sheet Components, General: Complying with ASTM C 645 requirements for metal and with ASTM A 653/A 653M, G60, hot-dip galvanized zinc coating.

B. Subgirts: C- or Z-shaped sections fabricated from 0.0598-inch bare steel thickness, shop-painted, cold-formed, metallic-coated steel sheet.

C. Zee Clips: 0.079-inch bare steel thickness, cold-formed, galvanized steel sheet.

D. Base or Sill Channels: 0.079-inch bare steel thickness, cold-formed, galvanized steel sheet.

E. Hat-Shaped, Rigid Furring Channels: ASTM C 645.

1. Minimum Base Metal Thickness: 0.0312 inch.
2. Depth: As indicated.

F. Z-Shaped Furring: With slotted or nonslotted web, face flange of 1-1/4 inches, wall attachment flange of 7/8 inch, minimum bare metal thickness of 0.0179 inch, and depth required to fit insulation thickness indicated.

G. Fasteners for Metal Framing: Of type, material, size, corrosion resistance, holding power, and other properties required to fasten steel members to substrates.

2.6 MISCELLANEOUS MATERIALS

A. Fasteners: Self-tapping screws, bolts, nuts, self-locking rivets and bolts, end-welded studs, and other suitable fasteners designed to withstand design loads. Provide exposed fasteners with heads matching color of metal wall panels by means of plastic caps or factory-applied coating.

1. Fasteners for Wall Panels: Self-drilling or self-tapping, zinc-plated, hex-head carbon-steel screws, with a stainless-steel cap or zinc-aluminum-alloy head and EPDM or neoprene sealing washer.
2. Exposed Fasteners for Composite Panels: Stainless steel.
3. Fasteners for Flashing and Trim: Blind fasteners or self-drilling screws with hex washer head.
4. Blind Fasteners: High-strength aluminum or stainless-steel rivets.

B. Bituminous Coating: Cold-applied asphalt mastic, SSPC-Paint 12, compounded for 15-mil dry film thickness per coat. Provide inert-type noncorrosive compound free of asbestos fibers, sulfur components, and other deleterious impurities.

2.7 METAL-FACED COMPOSITE WALL PANELS

A. General: Provide factory-formed and -assembled metal-faced composite wall panels fabricated from two metal facings bonded, using no glues or adhesives, to solid extruded thermoplastic core; formed into profile for installation method indicated. Include attachment system components and accessories required for weathertight system.

1. Citadel Architectural Products Envelope 2000 or Procore.
2. Laminators, Inc – Omega Lite.
3. Mapes Architectural Products, Veneer Panel.

B. Aluminum-Faced Composite Wall Panels: Formed with 0.032-inch- thick, painted aluminum sheet facings.

1. Panel Thickness: 0.236 inch.
2. Core: Standard corrugated or solid plastic.
3. Exterior Finish: Kynar 500 on aluminum.

    a. Color: Match Laminators Color "Sandstone".

4. Surface: Smooth/flat.

C. Attachment System Components: Formed from extruded aluminum.

1. Include manufacturer's standard perimeter extrusions with integral weather stripping or sealant.

D. Flashing and Trim: Same material, finish, and color as facings of adjacent composite panels, unless otherwise indicated.

2.8 ACCESSORIES

A. Wall Panel Accessories: Provide components required for a complete metal wall panel assembly including trim, copings, fasciae, mullions, sills, corner units, clips, flashings, sealants, gaskets, fillers, closure strips, and similar items. Match material and finish of metal wall panels, unless otherwise indicated.

1. Closures: Provide closures at eaves and rakes, fabricated of same metal as metal wall panels.
2. Backing Plates: Provide metal backing plates at panel end splices, fabricated from material recommended by manufacturer.
3. Closure Strips: Closed-cell, expanded, cellular, rubber or crosslinked, polyolefin-foam or closed-cell laminated polyethylene; minimum 1-inch- thick, flexible closure strips; cut or premolded to match metal wall panel profile. Provide closure strips where indicated or necessary to ensure weathertight construction.

B. Flashing and Trim: Formed from 0.0179-inch- thick, zinc-coated (galvanized) steel sheet or aluminum-zinc alloy-coated steel sheet prepainted with coil coating. Provide flashing and trim as required to seal against weather and to provide finished appearance. Locations include, but are not limited to, bases, drips, sills, jambs, corners, endwalls, framed openings, rakes, fasciae, parapet caps, soffits, reveals, and fillers. Finish flashing and trim with same finish system as adjacent metal wall panels.

2.9 FABRICATION

A. General: Fabricate and finish metal wall panels and accessories at the factory to greatest extent possible, by manufacturer's standard procedures and processes, as necessary to fulfill indicated performance requirements demonstrated by laboratory testing. Comply with indicated profiles and with dimensional and structural requirements.

B. Metal-Faced Composite Wall Panels: Factory form panels in a continuous process with no glues or adhesives between dissimilar materials. Trim and square edges of sheets with no displacement of face sheets or protrusion of core material.

1. Fabricate panels with sharply cut edges, with no displacement of face sheets or protrusion of core material.
2. Dimensional Tolerances:

    a. Length: Plus 0.375 inch.
    b. Width: Plus 0.188 inch.
    c. Thickness: Plus or minus 0.008 inch.
    d. Panel Bow: 0.8 percent maximum of panel length or width.
    e. Squareness: 0.2 inch maximum.

C. Sheet Metal Accessories: Fabricate flashing and trim to comply with recommendations in SMACNA's "Architectural Sheet Metal Manual" that apply to the design, dimensions, metal, and other characteristics of item indicated.

1. Form exposed sheet metal accessories that are without excessive oil canning, buckling, and tool marks and that are true to line and levels indicated, with exposed edges folded back to form hems.
2. Seams for Aluminum: Fabricate nonmoving seams with flat-lock seams. Form seams and seal with epoxy seam sealer. Rivet joints for additional strength.
3. Sealed Joints: Form nonexpansion but movable joints in metal to accommodate elastomeric sealant to comply with SMACNA standards.
4. Fabricate cleats and attachment devices from same material as accessory being anchored or from compatible, noncorrosive metal recommended by metal wall panel manufacturer.

    a. Size: As recommended by SMACNA's "Architectural Sheet Metal Manual" or metal wall panel manufacturer for application but not less than thickness of metal being secured.

2.10 FINISHES, GENERAL

A. Comply with NAAMM's "Metal Finishes Manual for Architectural and Metal Products" for recommendations for applying and designating finishes.

B. Protect mechanical and painted finishes on exposed surfaces from damage by applying a strippable, temporary protective covering before shipping.

C. Appearance of Finished Work: Variations in appearance of abutting or adjacent pieces are acceptable if they are within one-half of the range of approved Samples. Noticeable variations in the same piece are not acceptable. Variations in appearance of other components are acceptable if they are within the range of approved Samples and are assembled or installed to minimize contrast.

PART 3 - EXECUTION

3.1 EXAMINATION

A. Examine substrates, areas, and conditions, with Installer present, for compliance with requirements for installation tolerances, metal wall panel supports, and other conditions affecting performance of work.

1. Examine primary and secondary wall framing to verify that girts, angles, channels, studs, and other structural panel support members and anchorage have been installed within alignment tolerances required by metal wall panel manufacturer.
2. Examine solid wall sheathing to verify that sheathing joints are supported by framing or blocking and that installation is within flatness tolerances required by metal wall panel manufacturer.
3. For the record, prepare written report, endorsed by Installer, listing conditions detrimental to performance of work.

B. Examine roughing-in for components and systems penetrating metal wall panels to verify actual locations of penetrations relative to seam locations of metal wall panels before metal wall panel installation.

C. Proceed with installation only after unsatisfactory conditions have been corrected.

3.2 PREPARATION

A. Clean substrates of substances harmful to insulation, including removing projections capable of interfering with insulation attachment.

B. Substrate Board: Install substrate board over wall sheathing on entire wall surface. Attach with substrate-board fasteners.

1. Install substrate board with long joints in continuous straight lines, perpendicular to direction of metal wall panel seams with end joints staggered between rows. Tightly butt substrate boards together.
2. Comply with FMG requirements for fire-rated construction.

C. Install flashings and other sheet metal to comply with requirements specified in Division 7 Section "Sheet Metal Flashing and Trim."

D. Install fasciae and copings to comply with requirements specified in Division 7 Section "Manufactured Roof Specialties."

E. Miscellaneous Framing: Install subgirts, base angles, sills, furring, and other miscellaneous wall panel support members and anchorage according to ASTM C 754 and metal wall panel manufacturer's written recommendations.

3.3 METAL WALL PANEL INSTALLATION, GENERAL

A. General: Install metal wall panels in orientation, sizes, and locations indicated on Drawings. Install panels perpendicular to girts and subgirts, unless otherwise indicated. Anchor metal wall

panels and other components of the Work securely in place, with provisions for thermal and structural movement.

1. Field cutting of metal wall panels by torch is not permitted.
2. Shim or otherwise plumb substrates receiving metal wall panels.
3. Rigidly fasten base end of metal wall panels and allow eave end free movement due to thermal expansion and contraction. Predrill panels.
4. Flash and seal metal wall panels with weather closures at eaves, rakes, and at perimeter of all openings. Fasten with self-tapping screws. Do not begin installation until weather barrier and flashings that will be concealed by metal wall panels are installed.
5. Install screw fasteners in predrilled holes.
6. Locate and space fastenings in uniform vertical and horizontal alignment.
7. Install flashing and trim as metal wall panel work proceeds.
8. Locate panel splices over, but not attached to, structural supports. Stagger panel splices and end laps to avoid a four-panel lap splice condition.
9. Apply elastomeric sealant continuously between metal base channel (sill angle) and concrete, and elsewhere as indicated or, if not indicated, as necessary for waterproofing.
10. Align bottom of metal wall panels and fasten with blind rivets, bolts, or self-tapping screws. Fasten flashings and trim around openings and similar elements with self-tapping screws.
11. Provide weatherproof escutcheons for pipe and conduit penetrating exterior walls.

B. Fasteners:

1. Steel Wall Panels: Use stainless-steel fasteners for surfaces exposed to the exterior and galvanized steel fasteners for surfaces exposed to the interior.
2. Aluminum Wall Panels: Use aluminum or stainless-steel fasteners for surfaces exposed to the exterior and aluminum or galvanized steel fasteners for surfaces exposed to the interior.

C. Metal Protection: Where dissimilar metals will contact each other or corrosive substrates, protect against galvanic action by painting contact surfaces with bituminous coating, by applying rubberized-asphalt underlayment to each contact surface, or by other permanent separation as recommended by metal wall panel manufacturer.

1. Coat back side of aluminum wall panels with bituminous coating where wall panels will contact wood, ferrous metal, or cementitious construction.

D. Joint Sealers: Install gaskets, joint fillers, and sealants where indicated and where required for weatherproof performance of metal wall panel assemblies. Provide types of gaskets, fillers, and sealants indicated or, if not indicated, types recommended by metal wall panel manufacturer.

1. Seal metal wall panel end laps with double beads of tape or sealant, full width of panel. Seal side joints where recommended by metal wall panel manufacturer.
2. Prepare joints and apply sealants to comply with requirements in Division 7 Section "Joint Sealants."

3.4 METAL-FACED COMPOSITE WALL PANEL INSTALLATION

A. General: Install attachment system required to support wall panels and to provide a complete weathertight wall system, including subgirts, perimeter extrusions, tracks, drainage channels, panel clips, and anchor channels.

1. Include attachment to supports, panel-to-panel joinery, panel-to-dissimilar-material joinery, and panel-system joint seals.
2. Do not begin installation until weather barrier and flashings that will be concealed by composite panels are installed.

B. Clip Installation: Attach panel clips to supports at each wall panel joint at locations, spacings, and with fasteners recommended by manufacturer. Attach routed-and-returned flanges of wall panels to panel clips with manufacturer's standard fasteners.

1. Seal horizontal and vertical joints between adjacent panels with sealant backing and sealant. Install sealant backing and sealant according to requirements specified in Division 7 Section "Joint Sealants."

C. Track-Support Installation: Provide manufacturer's standard horizontal and vertical tracks that provide support and complete secondary drainage system, draining to the exterior at horizontal joints. Install support system at locations, spacings, and with fasteners recommended by manufacturer. Attach panels to wall by interlocking tracks with perimeter extrusions attached to wall panels. Fully engage integral gaskets and leave horizontal and vertical joints with open reveal.

1. Attach routed-and-returned flanges of wall panels to perimeter extrusions with manufacturer's standard fasteners.
2. Attach flush wall panels to perimeter extrusions by engaging panel edges and by attaching with manufacturer's standard structural silicone adhesive.
3. Install wall panels to allow individual panels to "free float" and be installed and removed without disturbing adjacent panels.
4. Do not apply sealants to joints, unless otherwise indicated on Drawings.

3.5 GLAZED-IN METAL WALL PANEL INSTALLATION

A. Comply with requirements specified in Division 8 Section "Glazed Aluminum Curtain Walls."

3.6 ACCESSORY INSTALLATION

A. General: Install accessories with positive anchorage to building and weathertight mounting and provide for thermal expansion. Coordinate installation with flashings and other components.

1. Install components required for a complete metal wall panel assembly including trim, copings, corners, seam covers, flashings, sealants, gaskets, fillers, closure strips, and similar items.

B. Flashing and Trim: Comply with performance requirements, manufacturer's written installation instructions, and SMACNA's "Architectural Sheet Metal Manual." Provide concealed fasteners where possible, and set units true to line and level as indicated. Install work with laps, joints, and seams that will be permanently watertight and weather resistant.

1. Install exposed flashing and trim that is without excessive oil canning, buckling, and tool marks and that is true to line and levels indicated, with exposed edges folded back to form hems. Install sheet metal flashing and trim to fit substrates and to result in waterproof and weather-resistant performance.
2. Expansion Provisions: Provide for thermal expansion of exposed flashing and trim. Space movement joints at a maximum of 10 feet with no joints allowed within 24 inches of corner or intersection. Where lapped or bayonet-type expansion provisions cannot be used or would not be sufficiently weather resistant and waterproof, form expansion joints of intermeshing hooked flanges, not less than 1 inch deep, filled with mastic sealant (concealed within joints).

3.7 ERECTION TOLERANCES

A. Installation Tolerances: Shim and align metal wall panel units within installed tolerance of 1/4 inch in 20 feet, nonaccumulative, on level, plumb, and location lines as indicated and within 1/8-inch offset of adjoining faces and of alignment of matching profiles.

3.8 CLEANING AND PROTECTION

A. Remove temporary protective coverings and strippable films, if any, as metal wall panels are installed, unless otherwise indicated in manufacturer's written installation instructions. On completion of metal wall panel installation, clean finished surfaces as recommended by metal wall panel manufacturer. Maintain in a clean condition during construction.

B. After metal wall panel installation, clear weep holes and drainage channels of obstructions, dirt, and sealant.

C. Replace metal wall panels that have been damaged or have deteriorated beyond successful repair by finish touchup or similar minor repair procedures.

END OF SECTION 07412

SECTION 07552
MODIFIED BITUMINOUS MEMBRANE ROOFING

PART 1 - GENERAL

1.1 RELATED DOCUMENTS

A. Drawings and general provisions of the Contract, including General and Supplementary Conditions and Division 1 Specification Sections, apply to this Section.

1.2 SUMMARY

A. This Section includes the following:

1. Modified bituminous membrane roofing over prepared substrate.
2. Roof Insulation.
3. Roof substrate board.
4. Walkway pads.

B. Related Sections include the following:

1. Division 6 Section "Miscellaneous Carpentry" for wood blocking and nails.
2. Division 7 "Flashing and Sheet Metal" for metal roof penetration flashings, flashings, and counter-flashings..
3. Division 7 "Roof Expansion Assemblies".

1.3 REFERENCES

A. American Society of Civil Engineers (ASCE):

1. ASCE 7-98, Minimum Design Loads for Buildings and Other Structures.

B. American Society for Testing and Materials (ASTM):

1. ASTM D41-94, Specification for Asphalt Primer Used in Roofing, Dampproofing and Waterproofing.
2. ASTM D312-00, Specification for Asphalt Used in Roofing.
3. ASTM D451-91, Test Method for Sieve Analysis of Granular Mineral Surfacing for Asphalt Roofing Products.
4. ASTM D1079-01, Terminology Relating to Roofing, Waterproofing and Bituminous Materials.
5. ASTM D1863-93, Specification for Mineral Aggregate Used as a Protective Coating for Roofing.

6. ASTM D2178-97a, Specification for Asphalt Glass Felt Used as a Protective Coating for Roofing.
7. ASTM D2822-91, Specification for Asphalt Roof Cement.
8. ASTM D2824-02, Specification for Aluminum-Pigmented Asphalt Roof Coating.
9. ASTM D5147-01a, Test Method for Sampling and Testing Modified Bituminous Sheet Materials.
10. ASTM D6162-0a, Specification for Styrene Butadiene Styrene (SBS) Modified Bituminous Sheet Materials Using a Combination of Polyester and Glass Fiber Reinforcements.
11. ASTM D6163-00, Specification for Styrene Butadiene Styrene (SBS) Modified Bituminous Sheet Materials Using Glass Fiber Reinforcements.
12. ASTM E108-00, Test Methods for Fire Test of Roof Coverings.

C. Factory Mutual Research (FM):

1. Roof Assembly Classifications.

D. National Roofing Contractors Association (NRCA):

1. Roofing and Waterproofing Manual.

E. Underwriters Laboratories, Inc. (UL):

1. Fire Hazard Classifications.

F. Warnock Hersey (WH):

1. Fire Hazard Classifications.

1.4 PERFORMANCE REQUIREMENTS

A. General: Provide and install a long-term, quality roof system that meets or exceeds all current NRCA guidelines as stated in the most recent edition of the NRCA Roofing and Waterproofing Manual.

B. Material Compatibility: Provide roofing materials that are compatible with one another under conditions of service and application required, as demonstrated by roofing manufacturer based on testing and field experience.

1.5 SUBMITTALS

A. Any material submitted as equal to the specified material must be accompanied by a copy of the manufacturer's standard specification section. That specification section shall be signed and sealed by a professional engineer licensed in the state in which the installation is to take place. Substitution requests containing specifications without licensed engineer certification shall be rejected for non-conformance.

B. Submit under provisions of Section 01300.

C. Product Data: Provide manufacturer's technical product data for each type of roofing product specified. Include data substantiating that materials comply with specified requirements.

D. Samples: Submit two (2) 12" X 12"samples of each membrane product specified.

E. Manufacturer's Installation Instructions: Submit installation instructions and recommendations indicating special precautions required for installing the membrane.

F. Manufacturer's Certificate: Certify that roof system furnished is approved by Factory Mutual, Underwriters Laboratories, Warnock Hersey or approved third party testing facility in accordance with ASTM E108, Class A for external fire and meets local or nationally recognized building codes.

G. Manufacturer's Certificate: Certify that the roof system is adhered properly to meet or exceed the requirements of FM 1-90.

H. Manufacturer's Certificate: Certify that the roof system furnished is approved by Factory Mutual Approval Standard 4470.

I. Manufacturer's Certificate: Certify that materials are manufactured in the United States and conform to requirements specified herein, are chemically and physically compatible with each other, and are suitable for inclusion within the total roof system specified herein.

J. Manufacturer's Certificate: Submit a certified copy of the roofing manufacturer's ISO 9001 compliance certificate.

K. Test Reports: Submit test reports, prepared by an independent testing agency, for all modified bituminous sheet roofing, indicating compliance with ASTM D5147.

L. Submit a copy of an unexecuted manufacturer's warranty for review.

M. Submit a sample of roofing aggregate for review.

N. Design Loads: Submit copy of manufacturer's minimum design load calculations according to ASCE 7-98, Method 2 for Components and Cladding, sealed by a registered professional engineer employed by the system manufacturer as a full-time staff engineer. In no case shall the design loads be taken to be less than those detailed in article 1.14 of this specification.

1.6 QUALITY ASSURANCE

A. Manufacturer: Company specializing in manufacturing the products specified in this section with minimum 12 years documented experience and has ISO 9001 certification.

B. Installer: Company specializing in modified bituminous roofing installation with a minimum 5 years experience and authorized by roofing system manufacturer as qualified to install manufacturer's roofing materials.

C. Installer's Field Supervision: Maintain a full-time Supervisor/Foreman on job site during all phases of roofing work and at any time roofing work is in progress. Maintain proper supervision of workmen. Maintain a copy of the specifications in the possession of the Supervisor/Foremen and on the roof at all times.

D. Immediately correct roof leakage during construction. If the Contractor does not respond within twenty four (24) hours, the Owner has the right to hire a qualified contractor and backcharge the original contractor.

E. Insurance Certification: Assist Owner in preparation and submittal of roof installation acceptance certification as may be necessary in connection with fire and extended coverage insurance on roofing and associated work.

F. Preinstallation Conference: Conduct conference at Project site. Comply with requirements in Division 1 Section "Project Management and Coordination." Review methods and procedures related to roofing system including, but not limited to, the following:

1. Convene a pre-roofing conference approximately two (2) weeks before scheduled commencement of modified bituminous roofing system installation and associated work.
2. Require attendance of installer of each component of associated work, installers of deck or substrate construction to receive roofing work, installers of rooftop units and other work in and around roofing which must precede or follow roofing work (including mechanical work if any), Architect, Owner, roofing system manufacturer's representative, and other representatives directly concerned with performance of the Work, including (where applicable) Owner's insurers, testing agencies and governing authorities.
3. Review foreseeable methods and procedures related to roofing work.
4. Tour representative areas of roofing substrates (decks), inspect and discuss condition of substrate, roof drains, curbs, penetrations and other preparatory work performed by others.
5. Review structural loading limitations of deck and inspect deck for loss of flatness and for required attachment.
6. Review roofing system requirements (drawings, specifications and other contract documents).
7. Review required submittals both completed and yet to be completed.
8. Review and finalize construction schedule related to roofing work and verify availability of materials, installer's personnel, equipment and facilities needed to make progress and avoid delays.
9. Review required inspection, testing, certifying and material usage accounting procedures.
10. Review weather and forecasted weather conditions and procedures for coping with unfavorable conditions, including possibility of temporary roofing (if not mandatory requirement).
11. Record discussion of conference including decisions and agreements (or disagreements) reached and furnishes copy of record to each party attending. If

substantial disagreements exist at conclusion of conference, determine how disagreements will be resolved and set date for reconvening conference.

12. Review notification procedures for weather or non-working days.

1.8 DELIVERY, STORAGE AND HANDLING

A. Deliver products to site with seals and labels intact, in manufacturer's original containers, dry and undamaged.

B. Store and handle roofing sheets in a dry, well-ventilated, weather-tight place to ensure no possibility of significant moisture exposure. Store rolls of felt and other sheet materials on pallets or other raised surface. Stand all roll materials on end. Cover roll goods with a canvas tarpaulin or other breathable material (not polyethylene).

C. Do not leave unused materials on the roof overnight or when roofing work is not in progress unless protected from weather and other moisture sources.

D. It is the responsibility of the contractor to secure all material and equipment on the job site. If any material or equipment is stored on the roof, the contractor must make sure that the integrity of the deck is not compromised at any time. Damage to the deck caused by the contractor will be the sole responsibility of the contractor and will be repaired or replaced at his expense.

1.9 MANUFACTURER'S INSPECTIONS

A. When the project is in progress, the roofing system manufacturer will provide the following:

1. Keep the Architect informed as to the progress and quality of the work as observed.
2. Provide daily job site inspections.
3. Report to the Architect in writing any failure or refusal of the Contractor to correct unacceptable practices called to the Contractor's attention.
4. Confirm after completion that manufacturer has observed no applications procedures in conflict with the specifications other than those that may have been previously reported and corrected.

1.10 PROJECT CONDITIONS

A. Proceed with roofing work only when existing and forecasted weather conditions will permit unit of work to be installed in accordance with manufacturer's recommendations and warranty requirements.

B. Do not apply roofing insulation or membrane to damp deck surface.

C. Do not expose materials vulnerable to water or sun damage in quantities greater than can be weatherproofed during same day.

1.11 SEQUENCING AND SCHEDULING

A. Sequence installation of modified bituminous sheet roofing with related units of work specified in other sections to ensure that roof assemblies including roof accessories, flashing, trim and joint sealers are protected against damage from effects of weather, corrosion and adjacent construction activity.

B. Fully complete all modified bituminous membrane roofing field assembly work each day. **Phased construction will not be accepted**.

1.12 WARRANTY

A. Upon completion of installation, and acceptance by the Owner and Architect, the manufacturer will supply to the Owner a twenty-five (25) year warranty which is inclusive, not prorated and carry no dollar limitations. The warranty will cover roof assembly, flashing details including metal flashing and adjoining standing seam metal roof system supplied by the roof system manufacturer.

B. Installer will submit a minimum of a five (5) year warranty to the membrane manufacturer with a copy directly to Owner.

C. Membrane manufacturer will provide an annual inspection for the life of the warranty.

1.13 PRODUCT OPTIONS AND SUBSTITUTIONS

A. Any material submitted as an equal to the specified material must include a list of three (3) projects where the proposed material has been used in a similar roofing system as that which is specified and is located within a one hundred mile radius from the location of the project. In addition, the three projects must be at least three (3) years old and be available for inspection by the Architect, Owner or Owner's Representative.

B. Any deficiencies in performance, warranty terms or improper submittal procedure will constitute grounds for immediate rejection of substitution.

1.14 DESIGN AND PERFORMANCE CRITERIA

A. Uniform Wind Uplift Load Capacity

1. Installed roof system shall withstand negative (uplift) design wind loading pressures complying with the following criteria. Attachment shall be installed exactly as given in article 3.3 G.
   a. Design Code: ASCE 7-02, Method 2 for Components and Cladding.
   b. Category III Building with an Importance Factor of 1.15
   c. Wind Speed: 90 mph
   d. Ultimate Pullout Value: 450 pounds per each fastener
   e. Exposure Category: B
   f. Design Roof Height: feet: 12' 8" feet
   g. Minimum Building Width: 25 feet.
   h. Roof Pitch: 1/4-1/2 inch per foot.

I. Topographic Factor: 1.00

Roof Area	Design Uplift Pressure:
Zone 1 - Field of roof	13.7 psf
Zone 2 - Eaves<, ridges, hips,> and rakes	23.1 psf
Zone 3 - Corners	23.1 psf

B. Snow Load: 25 psf.

C. Live Load: 20 psf, or not to exceed original building design.

PART 2 - PRODUCTS

2.1 ACCEPTABLE MANUFACTURERS

A. When a particular trade name or performance standard is specified it shall be indicative of a standard required.

B. Provide roof system products as manufactured by The Garland Company. Submit substitutions under provisions of Section 01600.

C. Any item or materials submitted as a substitution to the manufacturer specified must comply in all respects as to the quality and performance of the brand name specified. The Architect/Owner shall be the sole judge as to whether or not an item submitted as a substitute is truly equal. Should the Contractor choose to submit a substitute product, he shall assume all monetary or other risk involved, should the Architect/Owner find the substitution unacceptable.

2.2 DESCRIPTION

A. Modified bituminous roofing work including but not limited to:

1. Minimum two (2) plies of approved ASTM D2178, Type IV glass fiber roofing felt bonded to the prepared substrate with hot bitumen. Ply sheets must be supplied by roof system manufacturer to qualify for 25 year NDL warranty.
2. Hot Bitumen: ASTM D312, Type III steep asphalt having the following characteristics:

a.	Softening Point	185°F - 205°F
b.	Flash Point	500°F
c.	Penetration @ 77°F	15-35 units
d.	Ductility @ 77°F	2.5 cm

3. Base Backer Flashing Ply: One (1) ply of 40 mil SBS base flashing ply covered by an additional layer of mineral-surfaced modified bitumen membrane and set in bitumen.

4. Top Flashing Ply Modified Membrane: STRESSPLY PLUS FR Mineral; 145 mil SBS (Styrene-Butadiene-Styrene) rubber modified membrane incorporating post polyester composite scrim. Membrane is surfaced with reflective mineral granules.

5. Field Cap Sheet Modified Membrane: STRESSPLY PLUS -Environmentally Friendly; 105 mil SBS (Styrene-Butylene-Styrene) rubber modified roofing membrane incorporating recycled rubber and reinforced with a fiberglass and polyester composite scrim.

6. Surfacing: Flood coat of hot bitumen and ASTM D1863 roofing aggregate consisting of new dry roofing slag,

7. Hot Surfacing Bitumen: ASTM D312, Type III steep asphalt having the following characteristics:

a.	Softening Point	185°F - 205°F
b.	Flash Point	500°F
c.	Penetration @ 77°F	15-35 units
d.	Ductility @ 77°F	2.5 cm

2.3 BITUMINOUS MATERIALS

A. Asphalt Primer: V.O.C. compliant, ASTM D41.

B. Asphalt Roofing Mastic: V.O.C. compliant, ASTM D2822, Type II.

C. Interply Adhesive: ASTM D312, Type III.

D. Aluminum Pigmented Trowel-Grade Roof Mastic: Reflectivity > 60%

2.4 SHEET MATERIALS

A. Felt Plies:

1. Fiberglass Felts: ASTM D2178, Type IV

B. Base Flashing Backer Ply:

1. 40 mil SBS modified membrane with woven fiberglass scrim reinforcement with the following minimum performance requirements according to ASTM D5147:

Properties (Finished Membrane):		
Tensile Strength (ASTM D5147)		
2 in/min. @73.4 ± 3.6°F	MD 205 lbf/in	CMD 205 lbf/in
Tear Strength (ASTM D5147)		
2 in/min. @ 73.4 ± 3.6°F	MD 295 lbf	CMD 280 lbf
Elongation at Maximum Tensile (ASTM D5147)		
2 in/min. @ 73.4 ± 3.6°F	MD 4.5%	CMD 5.0%

C. Modified Flashing Ply:

1. STRESSPLY PLUS FR MINERAL; ASTM D-6162, Type III Grade G

Tensile Strength (ASTM D-5147)		
2 in/min. @ 73.4 ± 3.6°F	MD 310 lbf/in	CMD 310 lbf/in
Tear Strength (ASTM D-5147)		
2 in/min. @ 73.4 ± 3.6°F	MD 500 lbf	CMD 510 lbf
Elongation at Maximum Tensile (ASTM D-5147)		
2 in/min. @ 73.4 ± 3.6°F	MD 3.5%	CMD 3.5%
Low Temperature Flexibility (ASTM D-5147):	Passes -30°F	

D. Field Roofing Cap Sheet Ply:

1. STRESSPLY PLUS; ASTM D6162, Type III Grade S

Tensile Strength (ASTM D5147)		
2 in/min. @ 73.4 ± 3.6°F	MD 310 lbf/in	CMD 310 lbf/in
Tear Strength (ASTM D5147)		
2 in/min. @ 73.4 ± 3.6°F	MD 500 lbf	CMD 500 lbf
Elongation at Maximum Tensile (ASTM D5147)		
2 in/min. @ 73.4 ± 3.6°F	MD 3.5%	CMD 3.5%
Low Temperature Flexibility (ASTM D5147):	Passes -30°F	

2.5 SURFACINGS

A. Roofing Aggregate (cover field roofing): To conform to ASTM D-1863

1. New Clean Dry Roofing Slag,

B. Non-Fibered Aluminum Paint (paint asphalt spills on flashing): GarlaBrite; non-fibered aluminum paint having the following characteristics:

Flash Point	103°F min.
Weight/Gallon	7.9 lbs./gal.

C. Aluminum Trowel-Grade Mastic (Seal vertical laps in conjunction with Garmesh reinforcing membrane in a 3-course application): Silver Flash aluminum roof mastic has the following characteristics:

Flash Ponit	>103°F min.
Weight/Gallon	8.3 lbs. /gal.
Reflectivity	>60%

2.6 RELATED MATERIALS

A. General: Provide preformed roof insulation boards that comply with requirements and referenced standards, selected from manufacturer's standard sizes and of thicknesses indicated.

B. Polyisocyanurate Board Insulation: ASTM C 1289, Type II, felt or glass-fiber mat facer on both major surfaces.

1. Manufacturers:

a. Celotex Corporation.
b. Firestone Building Products Company.
c. GAF Materials Corporation.
d. Johns Manville International, Inc.

2. Polyisocyanurate Insulation: shall be Polyisocyanurate foam insulation complying with physical properties of Federal Specification HH-I-1972/GEN. Insulation shall have a minimum 'R' Value of 5.8 per inch and compressive strength of minimum 16 psi per ASTM D-1621. The insulation shall be compatible to the roofing material manufacturer, with appropriate facing on surface.
3. Provide preformed wood fiberboard or perlite saddles, crickets, tapered edge strips, and other insulation shapes where indicated for sloping to drain. Fabricate to slopes indicated. Tapered Edge Strips and Cants: ASTM C 208-94, asphalt coated fiberboard, tapered edge strips tapered from 1-5/8 inch to 1/8 inch, size: 12" x 48". Cants 3 ½" x 3 ½"
4. Tapered Insulation: Provide factory-tapered insulation boards fabricated to slope of 1/2 inch per 12 inches, unless otherwise indicated.
5. Provide ½" asphalt coated fiberboard substrate over foam insulation.

C. All fasteners, nails and caps shall be per roofing manufacturer's installation specifications for specified insulation and corresponding to roofing deck materials are to be fastened to, and shall meet current FM Standard 4470 for corrosion resistance.

D. Wood Blocking - Shall be Standard Grade, No. 2 or better, Douglas fir or other approved species, surfaced four sides. Lumber shall not be treated lumber per current N.R.C.A. guidelines

E. Metal Discs: Flat discs or caps of zinc-coated sheet metal not lighter than twenty eight (28) gauge and not less than one (1) inch in diameter. Form discs to prevent dishing. Bell or cup shaped caps are not acceptable.

F. Walkway Pads: 1" X 3' X 4' walkway pads placed at the base of all roof top doors and around all hatches and HVAC equipment as specified on the roof drawings.

G. Urethane Sealant: One part, non-sag sealant as recommended and furnished by the membrane manufacturer for moving joints.

1.	Tensile Strength (ASTM D412)	250 psi
2.	Elongation (ASM D412)	950%
3.	Hardness, Shore A (ASTM C920)	35
4.	Adhesion-in-Peel (ASTM C920)	30 pli

H. Butyl Tape: 100% solids, asbestos free and compressive tape designed to seal as recommended and furnished by the membrane manufacturer.

I. Pitch Pocket Sealer: Two part, 100% solids, self leveling, polyurethane sealant for filling pitch pans as recommended and furnished by the membrane manufacturer.

1.	Durometer (ASTM D2240)	40-50 Shore
2.	Elongation (ASTM D 412)	250%
3.	Tensile Strength (ASTM D 412)	200 @ 100 mil

PART 3 - EXECUTION

3.1 EXAMINATION

A. Verify that deck surfaces and project conditions are ready to receive work of this section.

B. Verify that deck is supported and secured to structural members.

C. Verify that deck is clean and smooth, free of depressions, projections or ripples, and is properly sloped to drains.

D. Verify that adjacent roof members do not vary more than 1/4 inch in height.

E. Verify that deck surfaces are dry and free of snow or ice. Verify that metal deck flutes are clean and dry.

F. Verify that openings, curbs, pipes, conduit, sleeves, ducts, and other items which penetrate the roof are set solidly, and that wood cant strips, wood nailing strips and reglets are set in place.

3.2 PREPARATION – METAL DECK

A. Install preformed sound absorbing insulation strips in acoustic deck flutes in accordance with manufacturer's instructions.

3.3 GENERAL INSTALLATION

A. Cooperate with manufacturer, inspection and test agencies engaged or required to perform services in connection with installing the roof system.

B. Insurance/Code Compliance: Where required by code, install and test the roofing system to comply with governing regulation and specified insurance requirements.

C. Protect other work from spillage of roofing materials and prevent materials from entering or clogging drains and conductors. Replace or restore other work damaged by installation of the modified bituminous roofing system.

D. Coordinate installation of roofing system components so that insulation and roofing plies are not exposed to precipitation or left exposed overnight. Provide cut-offs at end of each day's work to cover exposed ply sheets and insulation with two (2) plies of #15 organic roofing felt set in full mopping of bitumen and with joints and edges sealed with roofing cement. Remove cut-offs immediately before resuming work.

E. Asphalt Bitumen Heating: Heat and apply bitumen in accordance with the Equiviscous Temperature (EVT) Method as recommended by National Roofing Contractors Association (NRCA). Do not raise temperature above minimum normal fluid-holding temperature necessary to attain EVT (plus 5°F at point of application) more than one (1) hour prior to time of application. Determine flash point, finished blowing temperature, EVT, and fire-safe handling temperature of bitumen either from information by manufacturer or by suitable test. Do not exceed recommended temperature limits during bitumen heating. Do not heat to a temperature higher than twenty five degrees (25°) below flash point. Discard bitumen that has been held at temperature exceeding Finishing Blowing Temperature (FBT) for more than three (3) hours. Keep kettle lid closed except when adding bitumen.

F. Bitumen Mopping Rate:

1. Interply Mopping**:** Apply bitumen at the rate of approximately twenty five (25) lb. of bitumen per roof square.
2. Modified Membrane Mopping: Apply bitumen at the rate of approximately thirty (30) lb. of bitumen per roof square.

3. Flood Coat: Apply bitumen at the rate of approximately sixty (60) to seventy (70) lb. of bitumen per square (plus or minus twenty five (25) percent on a total job average basis).

G. Substrate Joint Penetrations: Prevent bitumen from penetrating substrate joints, entering building, or damaging roofing system components or adjacent building construction. Install bleeder strip around perimeter and all penetrations openings where bitumen could flow into the building.

H. Apply roofing materials as specified by manufacturer's instructions.

1. Keep roofing materials dry before and during application.
2. Do not permit phased construction.
3. Complete application of roofing plies, modified sheet and flashing in a continuous operation.
4. Begin and apply only as much roofing in one day as can be completed that same day.

I. Cut-Offs (Waterstops): At end of each day's roofing installation, protect exposed edge of incomplete work, including ply sheets and insulation. Provide temporary covering of two (2) plies of #15 organic roofing felt set in full mopping of bitumen with joints and edges sealed.

3.4 INSULATION INSTALLATION

A. Insulation: Install base layer of 3.2" Polyisocyanurate insulation mechanically fastened to the steel deck according to the fastening patterns following FM I-90. Install second layer consisting of 1/2 inch High-Density Fiberboard set with off-set joints in hot steep asphalt. The total of all two insulation layers must have a minimum "R" value of 21.0.

B. Fastener pattern required:

11 fasteners per 48" X 96" insulation board in Zone 1

17 fasteners per 48" X 96" insulation board in Zone 2

20 fasteners per 48" X 96" insulation board in Zone 3

C. Zone 2 and Zone 3 required widths

39' X 25' addition requires an edge zone width of 3 feet 0 inches.

46' X 38' addition requires an edge zone width of 3 feet 8 inches.

3.5 FELT PLY INSTALLATION

A. Fiberglass Plies: Install two (2) fiberglass ply sheets in twenty five (25) lbs. per square of bitumen shingled uniformly to achieve two plies over the entire prepared substrate. Shingle in direction of slope of roof to shed water on each area of roof.

B. Lap ply sheet ends eight (8) inches. Stagger end laps twelve (12) inches minimum.

C. Lightly broom in fiberglass plies to assure complete adhesion.

D. Extend plies two (2) inches beyond top edges of cants at wall and roof projections and equipment bases.

E. Install base flashing ply to all perimeter and projection details.

3.7 MODIFIED MEMBRANE APPLICATION

A. Solidly bond the modified membrane to the base layers with specified asphalt at the rate of twenty five (25) to thirty (30) lbs. per 100 square feet.

B. The modified membrane roll must push a puddle of asphalt in front of it with asphalt slightly visible at all side laps. Exercise care during application to eliminate air entrapment under the membrane.

C. Apply pressure to all seams to ensure that the laps are solidly bonded to substrate.

D. Install subsequent rolls of modified membrane across the roof as above with a minimum of four (4) inch side laps and eight (8) inch end laps. Stagger the end laps. Apply the modified membrane in the same direction as the previous layers but stagger the laps so they do not coincide with the laps of the base layers.

E. Apply asphalt no more than five (5) feet ahead of each roll being embedded.

F. Extend membrane two (2) inches beyond top edge of all cants in full mopping of the specified asphalt as shown on the drawings.

3.8 FLASHING MEMBRANE INSTALLATION

A. Seal all curb, wall and parapet flashings with an application of mastic and mesh on a daily basis. Do not permit conditions to exist that will allow moisture to enter behind, around or under the roof or flashing membranes.

B. Prepare all walls, penetrations, expansion joints and where shown on the drawings to be flashed with asphalt primer at the rate of one hundred (100) square feet per gallon. Allow primer to dry tack free.

C. Use the modified membrane as the flashing membrane. Adhere to the underlying base flashing ply with specified asphalt unless otherwise noted in these specifications. Nail off at a minimum of eight (8) inches o.c. from the finished roof at all vertical surfaces.

D. Solidly adhere the entire sheet of flashing membrane to the substrate.

E. Seal all of flashing membrane end laps and miters (corners) with a three-course application of trowel grade aluminum mastic and fiberglass mesh.

F. Raised Metal Edge Detail No. MBH-11:

1. Inspect the nailer to assure proper attachment and configuration.
2. Run one ply over the edge. Assure coverage of all wood nailers. Fasten plies with ring shank nails at eight (8) inches o.c.
3. Install continuous cleat and fasten at six (6) inches o.c.
4. Install new metal edge hooked to continuous cleat and set in bed of roof cement. Fasten flange to wood nailer every three (3) inches o.c. staggered.
5. Prime metal edge at a rate of one hundred (100) square feet per gallon and allow to dry.
6. Strip in flange with base flashing ply covering entire flange in bitumen with six (6) inches on to the field of roof. Assure ply laps do not coincide with metal laps.
7. Install a second ply of modified flashing ply in bitumen over the base flashing ply, nine (9) inches on to the field of the roof.

G. Raised Metal Edge Cap Detail No. MBH-12:

1. Inspect the nailer to assure proper attachment and configuration.
2. Run one ply over the edge. Assure coverage of all wood nailers. Fasten plies with ring shank nails at eight (8) inches o.c.
3. Install continuous cleat and fasten at six (6) inches o.c.
4. Strip in cant dam with base flashing ply covering entire vertical area in bitumen with six (6) inches on to the field of the roof. Assure ply laps do not coincide with metal laps.
5. Install a second ply of modified flashing ply in bitumen over the base flashing ply, nine (9) inches on to the field of the roof.
6. Install new metal edge hooked to continuous cleat and set in bed of roof cement.
7. Attach metal edge with approved fasteners and neoprene washers at eight (8) o.c.

H. Roof Edge With Gutter Detail No. MBH-13:

1. Inspect the nailer to assure proper attachment and configuration.
2. Run one ply over the edge. Assure coverage of all wood nailers. Fasten plies with ring shank nails at eight (8) inches o.c.
3. Install gutter and strapping.
4. Install continuous cleat and fasten at six (6) inches o.c.
5. Install new metal edge hooked to continuous cleat and set in bed of roof cement. Fasten flange to wood nailer every three (3) inches o.c. staggered.
6. Prime metal edge at a rate of one hundred (100) square feet per gallon and allow to dry.
7. Strip in flange with base flashing ply covering entire flange in bitumen with six (6) inches onto the field of the roof. Assure ply laps do not coincide with metal laps.
8. Install a second ply of modified flashing ply in bitumen over the base flashing ply, nine (9) inches on to the field of the roof.

I. Coping Cap Detail No. MBH-20:

1. Minimum flashing height is eight (8) inches. Maximum flashing height is twenty four (24) inches. Prime vertical wall at a rate of one hundred (100) square feet per gallon and allow to dry.
2. Set cant in bitumen. Run all field plies over cant a minimum of two (2) inches.
3. Install base flashing ply covering entire wall and wrapped over top of wall and down face with six (6) inches on to field of the roof and set in hot asphalt. Nail membrane at eight (8) inches o.c.
4. Install a second ply of modified flashing ply in bitumen over the base flashing ply, nine (9) inches on to the field of the roof. Apply a three-course application of aluminum mastic and mesh at all end laps and miters (corners).
5. Install coping cap per manufacturer's recommendations.

J. Reglet Mounted Counterflashing Detail No. MBH-23:

1. Minimum flashing height is eight (8) inches. Maximum flashing height is twenty four (24) inches. Prime vertical wall at a rate of one hundred (100) square feet per gallon and allow to dry.
2. Set cant in bitumen. Run all field plies over cant a minimum of two (2) inches.
3. Install base flashing ply covering wall set in bitumen with six (6) inches on to field of the roof.
4. Install a second ply of modified flashing ply in bitumen over the base flashing ply, nine (9) inches on to the field of the roof. Apply a three-course application of aluminum mastic and mesh at all end laps and miters (corners).
5. Apply butyl tape to wall behind flashing. Secure termination bar through flashing, butyl tape and into wall.
6. Cut reglet in masonry one joint above flashing.
7. Secure reglet counterflashing with expansion fasteners and caulk reglet opening.

K. Base Flashing For Non-Supported Deck Detail No. MBH-25:

1. Inspect the nailer to assure proper attachment and configuration. The wood cant strip should be mechanically attached to the vertical and horizontal wood nailers.
2. Install compressible insulation in neoprene cradle between wall and vertical wood nailer.
3. Prime vertical wall at a rate of one hundred (100) square feet per gallon and allow to dry.
4. Install base flashing ply covering entire wall and wrapped to top of wood nailer with six (6) inches on to field of the roof. Nail membrane at eight (8) inches o.c.
5. Install a second ply of modified flashing ply in bitumen over the base flashing ply, nine (9) inches on to the field of the roof. Apply a three-course application of aluminum mastic and mesh at all end laps and miters (corners).
6. Attach counterflashing through wall flashing at a spacing of twenty four (24) inches o.c.

L. Expansion Joint Detail No. MBH-30A:

1. Minimum curb height is eight (8) inches. Chamfer top of curb. Prime vertical curb at a rate of one hundred (100) square feet per gallon and allow to dry.
2. Mechanically attach wood cant to expansion joint nailers. Run all field plies over cant a minimum of two (2) inches.
3. Install compressible insulation in neoprene cradle.
4. Install base flashing ply covering curb set in bitumen with six (6) inches on to field of the roof.
5. Install a second ply of modified flashing ply in bitumen over the base flashing ply, nine (9) inches on to the field of the roof. Attach top of membrane to top of curb and nail at eight (8) inches o.c. Apply a three-course application of aluminum mastic and mesh at all end laps and miters (corners).
6. Install pre-manufactured expansion joint cover. Fasten sides at twelve (12) inches o.c. with fasteners and neoprene washers. Furnish all joint cover laps with butyl tape between metal covers.

M. Area Divider Detail No. MBH-31:

1. Minimum curb height is eight (8) inches. Prime vertical curb at a rate of one hundred (100) square feet per gallon and allow to dry.
2. Set cant in bitumen. Run all field plies over cant a minimum of two (2) inches.
3. Install base flashing ply covering curb set in bitumen with six (6) inches on to field of the roof.
4. Install a second ply of modified flashing ply in bitumen over the base flashing ply, nine (9) inches on to the field of the roof. Attach top of membrane to top of curb and nail at eight (8) inches o.c. Apply a three-course application of aluminum mastic and mesh at all end laps and miters (corners).

5. Install pre-manufactured metal cover. Fasten sides at twenty four (24) inches o.c. with fasteners and neoprene washers. Furnish all joint cover laps with butyl tape between metal covers.

N. Equipment Support Detail No. MBH-32:

1. Minimum curb height is eight (8) inches. Prime vertical at a rate of one hundred (100) square feet per gallon and allow to dry.
2. Set cant in bitumen. Run all field plies over cant a minimum of two (2) inches.
3. Install base flashing ply covering curb set in bitumen with six (6) inches on to field of the roof.
4. Install a second ply of modified flashing ply in bitumen over the base flashing ply, nine (9) inches on to the field of the roof. Attach top of membrane to top of curb and nail at eight (8) inches o.c. Apply a three-course application of aluminum mastic and mesh at all end laps and miters (corners).
5. Install pre-manufactured cover. Fasten sides at twenty four (24) inches o.c. with fasteners and neoprene washers. Furnish all joint cover laps with butyl tape between metal covers.
6. Set equipment on neoprene pad and fasten as required by equipment manufacturer.

O. Curb Detail/Air Handling Station Detail No. MBH-33:

1. Minimum curb height is eight (8) inches. Prime vertical at a rate of one hundred (100) square feet per gallon and allow to dry.
2. Set cant in bitumen. Run all field plies over cant a minimum of two (2) inches.
3. Install base flashing ply covering curb set in bitumen with six (6) inches on to field of the roof.
4. Install a second ply of modified flashing ply in bitumen over the base flashing ply, nine (9) inches on to the field of the roof. Apply a three-course application of aluminum mastic and mesh at all end laps and miters (corners).
5. Install pre-manufactured counterflashing with fasteners and neoprene washers or per manufacturer's recommendations.
6. Set equipment on neoprene pad and fasten as required by equipment manufacturer.

P. Pre-manufactured Curb For Equipment Support Detail No. MBH-35:

1. Minimum curb height is eight (8) inches. Prime vertical at a rate of one hundred (100) square feet per gallon and allow to dry.
2. Run all field plies over cant of the pre-manufactured equipment support a minimum of two (2) inches.
3. Install base flashing ply covering pre-manufactured curb with six (6) inches on to field of the roof.
4. Install a second ply of modified flashing ply installed over the base flashing ply, nine (9) inches on to field of the roof. Attach top of membrane to top of wood curb and nail at eight (8) inches o.c. Apply a three-course application of aluminum mastic and mesh at all end laps and miters (corners).

5. Install pre-manufactured cover. Fasten sides at twenty four (24) inches o.c. with fasteners and neoprene washers. Furnish all joint cover laps with butyl tape between metal covers.
6. Set equipment on neoprene pad and fasten as required by equipment manufacturer.

Q. Exhaust Fan Detail No. MBH-36:

1. Minimum curb height is eight (8) inches. Prime vertical at a rate of one hundred (100) square feet per gallon and allow to dry.
2. Set cant in bitumen. Run all plies over cant a minimum of two (2) inches.
3. Install base flashing ply covering curb with six (6) inches on to field of the roof.
4. Install a second ply of modified flashing ply installed over the base flashing ply, nine (9) inches on to field of the roof. Attach top of membrane to top of wood curb and nail at eight (8) inches o.c. Apply a three-course application of aluminum mastic and mesh at all end laps and miters (corners).
5. Install metal exhaust fan over the wood nailers and flashing to act as counterflashing. Fasten per manufacturer's recommendation.

R. Passive Vent/Air Intake Detail No. MBH-37:

1. Minimum curb height is eight (8) inches. Prime vertical at a rate of one hundred (100) square feet per gallon and allow to dry.
2. Set cant in bitumen. Run all plies over cant a minimum of two (2) inches.
3. Install base flashing ply covering curb with six (6) inches on to the field of the roof.
4. Install a second ply of modified flashing ply installed over the base flashing ply, nine (9) inches on to field of the roof. Attach top of membrane to top of wood curb and nail at eight (8) inches o.c. Apply a three-course application of aluminum mastic and mesh at all end laps and miters (corners).
5. Install passive vent/air intake over the wood nailers and flashing to act as counterflashing. Fasten per manufacturer's recommendations.

S. Roof Drain Detail No. MBH-40:

1. Plug drain to prevent debris from entering plumbing.
2. Taper insulation to drain minimum of twenty four (24) inches from center of drain.
3. Run roof system plies over drain. Cut out plies inside drain bowl.
4. Set lead/copper flashing (thirty (30) inch square minimum) in ¼ inch bed of mastic. Run lead/copper into drain a minimum of two (2) inches. Prime lead/copper at a rate of one hundred (100) square feet per gallon and allow to dry.
5. Install base flashing ply (forty (40) inch square minimum) in bitumen.
6. Install top ply flashing of mineral-surfaced modified membrane (forty eight (48) inch square minimum) in bitumen.
7. Install clamping ring and assure that all plies are under the clamping ring.

8. Remove drain plug and install strainer.
9. Install a copper gravel stop at outer edge perimeter of drain sump stripped in mastic and membrane.

T. Plumbing Stack Detail No. MBH-50:

1. Minimum stack height is twelve (12) inches.
2. Run roof system over the entire surface of the roof. Install 2-ply modified flashing target. Seal the base of the stack with elastomeric sealant.
3. Prime flange of new sleeve. Install properly sized sleeves set in ¼ inch bed of roof cement.
4. Install base flashing ply in bitumen.
5. Install membrane in bitumen.
6. Caulk the intersection of the membrane with elastomeric sealant.
7. Turn sleeve a minimum of one (1) inch down inside of stack.

U. Heat Stack Detail No. MBH-51:

1. Minimum stack height is twelve (12) inches.
2. Run roof system over the entire surface of the roof. Seal the base of the stack with elastomeric sealant.
3. Prime flange of new sleeve. Install properly sized sleeves set in ¼ inch bed of roof cement.
4. Install base flashing ply in bitumen.
5. Install modified membrane in bitumen.
6. Caulk the intersection of the membrane with elastomeric sealant.
7. Install new collar over cape. Weld collar or install stainless steel draw brand.

V. Pitch Pocket Detail No. MBH-52:

1. Run all plies up to the penetration.
2. Place the pitch pocket over the penetration and prime all flanges.
3. Strip in flange of pitch pocket with one (1) ply of base flashing ply. Extend six (6) inches onto field of roof.
4. Install second layer of modified membrane extending nine (9) inches onto field of the roof.
5. Fill pitch pocket half full with non-shrink grout. Let this cure and top off with pourable sealant.
6. Caulk joint between roof system and pitch pocket with roof cement.

W. Pitch Pocket Umbrella Detail No. MBH-53:

1. Run all plies up to the penetration.
2. Place the pitch pocket over the penetration and prime all flanges.
3. Strip in flange of pitch pocket with one (1) ply of base flashing ply. Extend six (6) inches onto field of roof.
4. Install second layer of modified membrane extending nine (9) inches onto field of the roof.
5. Fill pitch pocket half full with non-shrink grout. Let this cure and top off with pourable sealant.

6. Caulk joint between roof system and pitch pocket with roof cement.
7. Place a watershedding type metal bonnet over the top of the pitch pocket and clamp the top with a drawband collar. Caulk the upper edge of the band with an elastomeric sealant.

3.9 APPLICATION OF SURFACING

A. Aggregate Surfacing:

1. Apply surfacing materials to the finished field roofing five hundred (500) lbs. per square of new dry roofing slag. Uniformly embed aggregate in a flood coat of bitumen at a rate of sixty (60) to seventy (70) lbs. per square coverage after felt flashings, tests, repairs, and corrective actions have been completed and approved.

B. Aluminum Coating:

1. Allow all cold applied mastics and coating to properly dry and cure before installing the aluminum coating. Exception: Install 3-course mesh and Silver Flash Aluminum mastic to all end laps and miters (corners).
2. Paint all spilled or stained asphalt on exposed flashing with manufacturer's non-fibrated aluminum paint installed at a rate of one-half gallon per square per coat. This shall be a two-coat application with the finished stroke in one direction.

3.10 FIELD QUALITY CONTROL

A. Require daily attendance of roofing materials manufacturers' representatives at site during installation of the roofing system.

3.11 CLEANING

A. Remove bitumen adhesive drippings from all walls, windows, floors, ladders and finished surfaces.

B. In areas where finished surfaces are soiled by asphalt or any other sources of soiling caused by work of this section, consult manufacturer of surfaces for cleaning instructions and conform to their instructions.

C. Repair or replace defaced or disfigured finishes caused by work of this section.

3.12 FINAL INSPECTION

A. At completion of roofing installation and associated work, meet with the Roofing Contractor, Architect, Owner, and roofing system manufacturer's representative.

B. Walk roof surface areas of the building, inspect perimeter building edges as well as flashing of roof penetrations, walls, curbs and other equipment. List all items requiring correction or completion and furnish copy of list to each party in attendance.

C. The roofing system manufacturer reserves the right to request a thermographic scan of the roof during final inspection to determine if any damp or wet materials have been installed. The thermographic scan shall be provided by the Roofing Contractor.

D. If core cuts verify the presence of damp or wet materials, the Roofing Contractor shall be required to replace the damaged areas at his own expense.

E. Repair or replace deteriorated or defective work found at time above inspection as required to a produce an installation which is free of damage and deterioration at time of Substantial Completion and according to warranty requirements.

F. Notify the Roofing Contractor, Architect and Owner upon completion of corrections.

G. Following the final inspection, provide written notice of acceptance of the installation from the roofing system manufacturer.

END OF SECTION 07552

SECTION 07710
MANUFACTURED ROOF SPECIALTIES

PART 1 - GENERAL

1.1 RELATED DOCUMENTS

A. Drawings and general provisions of the Contract, including General and Supplementary Conditions and Division 1 Specification Sections, apply to this Section.

1.2 SUMMARY

A. This Section includes the following manufactured roof specialties:

1. Copings.
2. Counterflashings and reglets.

B. Related Sections include the following:

1. Division 4 Section "Unit Masonry Assemblies" for installing reglets.
2. Division 6 Section "Miscellaneous Carpentry" for wood nailers, curbs, and blocking.
3. Division 7 Section "Roof Expansion Assemblies" for manufactured roof expansion-joint cover assemblies.
4. Division 7 Section "Roof Accessories" for set-on-type curbs, equipment supports, roof hatches, vents, and other manufactured roof accessory units.
5. Division 7 Section "Joint Sealants" for field-applied sealants.

1.3 PERFORMANCE REQUIREMENTS

A. General: Manufacture and install manufactured roof specialties to resist thermally induced movement and exposure to weather without failing, rattling, leaking, and fastener disengagement.

B. FMG Listing: Manufacture and install copings and roof edge flashings that are listed in FMG's "Approval Guide" and approved for Windstorm Classification, Class 1-90. Identify materials with FMG markings.

C. Thermal Movements: Provide manufactured roof specialties that allow for thermal movements resulting from the following maximum change (range) in ambient and surface temperatures by preventing buckling, opening of joints, hole elongation, overstressing of components, failure of joint sealants, failure of connections, and other detrimental effects. Provide clips that resist rotation and avoid shear stress as a result of thermal movements. Base engineering calculation on surface temperatures of materials due to both solar heat gain and nighttime-sky heat loss.

1. Temperature Change (Range): 120 deg F, ambient; 180 deg F, material surfaces.

D. Water Infiltration: Provide manufactured roof specialties that do not allow water infiltration to building interior.

1.4 SUBMITTALS

A. Product Data: For each type of product indicated. Include construction details, material descriptions, dimensions of individual components and profiles, and finishes.

B. Shop Drawings: Show layouts of manufactured roof specialties, including plans and elevations. Identify factory- vs. field-assembled work. Include the following:

1. Details for fastening, joining, supporting, and anchoring manufactured roof specialties including fasteners, clips, cleats, and attachments to adjoining work.
2. Details for expansion and contraction.

C. Product Test Reports: Based on evaluation of comprehensive tests performed by a qualified testing agency, verifying compliance of copings and roof edge flashings with performance requirements.

D. Warranty: Special warranty specified in this Section.

1.5 QUALITY ASSURANCE

A. Product Options: Information on Drawings and in Specifications establishes requirements for system's aesthetic effects and performance characteristics. Aesthetic effects are indicated by dimensions, arrangements, alignment, and profiles of components and assemblies as they relate to sightlines, to one another, and to adjoining construction. Performance characteristics are indicated by criteria subject to verification by one or more methods including preconstruction testing, field testing, and in-service performance.

1. Do not modify intended aesthetic effects, as judged solely by Architect, except with Architect's approval. If modifications are proposed, submit comprehensive explanatory data to Architect for review.

1.6 COORDINATION

A. Coordinate installation of manufactured roof specialties with interfacing and adjoining construction to provide a leakproof, secure, and noncorrosive installation.

1.7 WARRANTY

A. Special Warranty on Painted Finishes: Manufacturer's standard form in which manufacturer agrees to repair finish or replace manufactured roof specialties that show evidence of deterioration of factory-applied finishes within specified warranty period.

1. Fluoropolymer Finish: Deterioration includes, but is not limited to, the following:

a. Color fading more than 5 Hunter units when tested according to ASTM D 2244.
b. Chalking in excess of a No. 8 rating when tested according to ASTM D 4214.
c. Cracking, checking, peeling, or failure of paint to adhere to bare metal.

2. Finish Warranty Period: 20 years from date of Substantial Completion.

PART 2 - PRODUCTS

2.1 EXPOSED METALS

A. Prepainted, Zinc-Coated Steel Sheet: ASTM A 653/A 653M, G90 (Z275) coating designation, structural quality, and prepainted by the coil-coating process to comply with ASTM A 755 / A 755M.

1. Surface: Smooth, flat finish.
2. High-Performance Organic Finish: Prepare, pretreat, and apply coating to exposed metal surfaces to comply with coating and resin manufacturer's written instructions.

    a. Fluoropolymer 2-Coat System: Manufacturer's standard 2-coat, thermocured system consisting of specially formulated inhibitive primer and fluoropolymer color topcoat containing not less than 70 percent polyvinylidene fluoride resin by weight; complying with physical properties and coating performance requirements of AAMA 2604.

2.2 CONCEALED METALS

A. Aluminum Sheet: ASTM B 209, alloy and temper recommended by manufacturer for use and structural performance indicated, mill finished.

B. Aluminum Extrusions: ASTM B 221, alloy and temper recommended by manufacturer for type of use and structural performance indicated, mill finished.

C. Zinc-Coated (Galvanized) Steel Sheet: ASTM A 653/A 653M, G90 coating designation; structural quality.

2.3 MISCELLANEOUS MATERIALS

A. General: Provide materials and types of fasteners, protective coatings, separators, sealants, and other miscellaneous items required by manufacturer for a complete installation.

B. Fasteners: Manufacturer's recommended fasteners, suitable for application and designed to withstand design loads.

1. Exposed Penetrating Fasteners: Gasketed screws with hex washer heads matching color of sheet metal.

C. Sealing Tape: Pressure-sensitive, 100 percent solids, polyisobutylene compound sealing tape with release-paper backing. Provide permanently elastic, nonsag, nontoxic, nonstaining tape.

D. Elastomeric Sealant: ASTM C 920, elastomeric silicone polymer sealant; of type, grade, class, and use classifications required to seal joints in sheet metal flashing and trim and remain watertight.

E. Butyl Sealant: ASTM C 1311, single-component, solvent-release butyl rubber sealant, polyisobutylene plasticized, heavy bodied for hooked-type expansion joints with limited movement.

F. Bituminous Coating: Cold-applied asphalt mastic, SSPC-Paint 12, compounded for 15-mil dry film thickness per coat. Provide inert-type noncorrosive compound free of asbestos fibers, sulfur components, and other deleterious impurities.

2.4 COPINGS

A. Copings: Manufactured coping system consisting of formed-metal coping cap in section lengths not exceeding 12 feet, concealed anchorage, concealed splice plates with same finish as coping caps, mitered corner units, and end cap units.

1. Coping Caps: Snap-on, fabricated from the following exposed metal:

   a. Prepainted, Zinc-Coated Steel: 24 gauge minimum.

2. Coping Cap Color:

   a. Smith @ Office Addition – Match existing clear anodized aluminum color.
   b. Smith @ Computer Lab Addition – Match existing Dark Brown.

3. Corners: Mechanically clinched and sealed watertight.
4. Special Fabrications: One-way and two-way sloped coping cap where shown.
5. Snap-on Coping Anchor Plates: Concealed, galvanized steel sheet, 12 inches wide, 0.028 inch thick, with integral cleats.
6. Face Leg Cleats: Concealed, continuous galvanized steel sheet.

2.5 COUNTERFLASHINGS AND REGLETS

A. Counterflashings: Manufactured units in lengths not exceeding 12 feet designed to snap into reglets and compress against base flashings with joints lapped, from the following exposed metal in thickness indicated:

1. Aluminum: 0.032 inch thick.
2. Prepainted, Zinc-Coated Steel: 0.28" thick.

B. Reglets: Manufactured units formed to provide secure interlocking of separate reglet and counterflashing pieces, and compatible with flashings indicated with factory-mitered and -welded corners and junctions, from the following exposed metal in thickness indicated:

1. Stainless Steel: 0.0187 inches thick.
2. Type: For masonry application, with offset top flange for embedment in masonry mortar joint.

2.6 FINISHES

A. Comply with NAAMM's "Metal Finishes Manual for Architectural and Metal Products" for recommendations for applying and designating finishes.

B. Protect mechanical and painted finishes on exposed surfaces from damage by applying a strippable, temporary protective covering before shipping.

C. Appearance of Finished Work: Variations in appearance of abutting or adjacent pieces are acceptable if they are within one-half of the range of approved Samples. Noticeable variations in the same piece are not acceptable. Variations in appearance of other components are acceptable if they are within the range of approved Samples and are assembled or installed to minimize contrast.

PART 3 - EXECUTION

3.1 EXAMINATION

A. Examine substrates, areas, and conditions, with Installer present, to verify actual locations, dimensions, and other conditions affecting performance of work.

1. Examine walls, roof edges, and parapets for suitable conditions for manufactured roof specialties.
2. Verify that substrate is sound, dry, smooth, clean, sloped for drainage, and securely anchored.
3. Proceed with installation only after unsatisfactory conditions have been corrected.

3.2 INSTALLATION

A. General: Install manufactured roof specialties according to manufacturer's written instructions. Anchor manufactured roof specialties securely in place and capable of resisting forces specified in performance requirements. Use fasteners, separators, sealants, and other miscellaneous items as required to complete manufactured roof specialty systems.

1. Install manufactured roof specialties with provisions for thermal and structural movement.
2. Torch cutting of manufactured roof specialties is not permitted.

B. Metal Protection: Where dissimilar metals will contact each other or corrosive substrates, protect against galvanic action by painting contact surfaces with bituminous coating or by other permanent separation as recommended by manufacturer.

1. Coat concealed side of uncoated aluminum manufactured roof specialties with bituminous coating where in contact with wood, ferrous metal, or cementitious construction.

C. Install manufactured roof specialties level, plumb, true to line and elevation, and without warping, jogs in alignment, excessive oil-canning, buckling, or tool marks.

D. Install manufactured roof specialties to fit substrates and to result in watertight performance. Verify shapes and dimensions of surfaces to be covered before manufacture.

E. Expansion Provisions: Provide for thermal expansion of exposed manufactured roof specialties. Space movement joints at a maximum of 12 feet with no unplanned joints within 18 inches of corners or intersections.

F. Fasteners: Use fasteners of type and size recommended by manufacturer but of sizes that will penetrate substrate not less than 1-1/4 inches for nails and not less than 3/4 inch for wood screws.

G. Seal joints with sealant as required by manufacturer of roofing specialties.

3.3 COPING INSTALLATION

A. Install cleats, anchor plates, and other anchoring and attachment accessories and devices with concealed fasteners.

B. Anchor copings to resist uplift and outward forces according to performance requirements.

1. Interlock face and back leg drip edges of snap-on coping cap into cleated anchor plates anchored to substrate at manufacturer's recommended spacing.
2. Interlock face leg drip edge into continuous cleat anchored to substrate at manufacturer's recommended spacing. Anchor back leg of coping with screw fasteners and elastomeric washers at manufacturer's recommended spacing.

3.4 COUNTERFLASHING AND REGLET INSTALLATION

A. Counterflashings: Coordinate installation of counterflashings with installation of base flashings. Insert counterflashings in reglets or receivers and fit tightly to base flashings. Extend counterflashings 4 inches over base flashings. Lap counterflashing joints a minimum of 4 inches and bed with sealant.

B. Reglets: Installation of reglets is specified in Division 4 Section "Unit Masonry Assemblies."

3.5 CLEANING AND PROTECTION

A. Clean exposed metal surfaces of substances that interfere with uniform oxidation and weathering.

B. Remove temporary protective coverings and strippable films as manufactured roof specialties are installed. On completion of installation, clean finished surfaces, including removing unused fasteners, metal filings, pop rivet stems, and pieces of flashing. Maintain in a clean condition during construction.

C. Replace manufactured roof specialties that have been damaged or that cannot be successfully repaired by finish touchup or similar minor repair procedures.

END OF SECTION 07710

SECTION 07720
ROOF ACCESSORIES

PART 1 - GENERAL

1.1 RELATED DOCUMENTS

A. Drawings and general provisions of the Contract, including General and Supplementary Conditions and Division 1 Specification Sections, apply to this Section.

1.2 SUMMARY

A. This Section includes the following:

1. Roof curbs.
2. Equipment supports.
3. Roof supports.
4. Preformed flashings.

B. Related Sections include the following:Retain one or more subparagraphs below to suit Project.
1.
2. Division 7 low-slope roofing Sections for roofing accessories.
3. Division 7 Section "Sheet Metal Flashing and Trim" for shop- and field-fabricated metal flashing and counterflashing, roof expansion-joint covers, and miscellaneous sheet metal trim and accessories.
4. Division 7 Section "Manufactured Roof Specialties" for fascia, copings, and gravel stops.
5. Division 7 Section "Roof Expansion Assemblies" for manufactured roof expansion-joint covers.

1.3 SUBMITTALS

A. Product Data: For each type of roof accessory indicated. Include construction details, material descriptions, dimensions of individual components and profiles, and finishes.

B. Shop Drawings: Show fabrication and installation details for roof accessories. Show layouts of roof accessories including plans and elevations. Indicate dimensions, weights, loadings, required clearances, method of field assembly, and components. Include plans, elevations, sections, details, and attachments to other work.

C. Coordination Drawings: Roof plans, drawn to scale, and coordinating penetrations and roof-mounted items. Show the following:

1. Size and location of roof accessories specified in this Section.

2. Method of attaching roof accessories to roof or building structure.
3. Other roof-mounted items including mechanical and electrical equipment, ductwork, piping, and conduit.

D. Samples: For each type of exposed factory-applied color finish required and for each type of roof accessory indicated, prepared on Samples of size to adequately show color.

E. Warranty: Special warranty specified in this Section.

1.4 QUALITY ASSURANCE

A. Sheet Metal Standard: Comply with SMACNA's "Architectural Sheet Metal Manual" details for fabrication of units, including flanges and cap flashing to coordinate with type of roofing indicated.

1.5 DELIVERY, STORAGE, AND HANDLING

A. Pack, handle, and ship roof accessories properly labeled in heavy-duty packaging to prevent damage.

1.6 PROJECT CONDITIONS

A. Field Measurements: Verify required openings for each type of roof accessory by field measurements before fabrication and indicate measurements on Shop Drawings.

1.7 COORDINATION

A. Coordinate layout and installation of roof accessories with roofing membrane and base flashing and interfacing and adjoining construction to provide a leakproof, weathertight, secure, and noncorrosive installation.

1. With Architect's approval, adjust location of roof accessories that would interrupt roof drainage routes or roof expansion joints.

1.8 WARRANTY

A. Special Warranty on Painted Finishes: Manufacturer's standard form in which manufacturer agrees to repair finish or replace roof accessories that show evidence of deterioration of factory-applied finishes within specified warranty period.

1. Fluoropolymer Finish: Deterioration includes, but is not limited to, the following:

a. Color fading more than 5 Hunter units when tested according to ASTM D 2244.
b. Chalking in excess of a No. 8 rating when tested according to ASTM D 4214.
c. Cracking, checking, peeling, or failure of paint to adhere to bare metal.

2. Finish Warranty Period: 20 years from date of Substantial Completion.

PART 2 - PRODUCTS

2.1 MANUFACTURERS

A. Available Manufacturers: Subject to compliance with requirements, manufacturers offering products that may be incorporated into the Work include, but are not limited to, manufacturers listed in other Part 2 articles.

2.2 METAL MATERIALS

A. Prepainted, Metallic-Coated Steel Sheet: Steel sheet metallic coated by hot-dip process and prepainted by coil-coating process to comply with ASTM A 755/A 755M.

1. Galvanized Steel Sheet: ASTM A 653/A 653M, G90 coated.
2. Aluminum-Zinc Alloy-Coated Steel Sheet: ASTM A 792/A 792M, Class AZ50 coated.
3. Exposed Finishes: High-Performance Organic Finish (2-Coat Fluoropolymer): Prepare, pretreat, and apply coating to exposed metal surfaces to comply with coating and resin manufacturer's written instructions.

a. Fluoropolymer 2-Coat System: Manufacturer's standard 2-coat, thermocured system consisting of specially formulated inhibitive primer and fluoropolymer color topcoat containing not less than 70 percent polyvinylidene fluoride resin by weight; complying with physical properties and coating performance requirements in AAMA 2605, except as modified below:

1) Humidity Resistance: 1000 hours.
2) Salt-Spray Resistance: 1000 hours.

B. Aluminum Sheet: ASTM B 209, alloy and temper recommended by manufacturer for type of use and finish. Coil-coat finish as follows:

1. High-Performance Organic Finish (2-Coat Fluoropolymer): AA-C12C40R1x (Chemical Finish: Cleaned with inhibited chemicals; Chemical Finish: Conversion coating; Organic Coating: Manufacturer's standard 2-coat, thermocured system consisting of specially formulated inhibitive primer and fluoropolymer color topcoat containing not less than 70 percent polyvinylidene fluoride resin by weight). Prepare, pretreat, and apply coating to exposed metal surfaces to comply with AAMA 2605 and with coating and resin manufacturer's written instructions.

a. Color and Gloss: White, match Architect's sample.

C. Aluminum Extrusions and Tubes: ASTM B 221, alloy and temper recommended by manufacturer for type of use, mill finished.

D. Stainless-Steel Shapes or Sheet: ASTM A 240/A 240M or ASTM A 666, Type 304 or Type 316, No. 2D finish.

E. Steel Shapes: ASTM A 36/A 36M, hot-dip galvanized to comply with ASTM A 123/A 123M, unless otherwise indicated.

F. Steel Tube: ASTM A 500, round tube, baked-enamel finished.

G. Galvanized Steel Tube: ASTM A 500, round tube, hot-dip galvanized to comply with ASTM A 123/A 123M.

H. Galvanized Steel Pipe: ASTM A 53/A 53M.

2.3 MISCELLANEOUS MATERIALS

A. Polyisocyanurate Board Insulation: ASTM C 1289, 1 inch thick.

B. Wood Nailers: Softwood lumber, pressure treated with waterborne preservatives for aboveground use, complying with AWPA C2; not less than 1-1/2 inches thick.

C. Bituminous Coating: Cold-applied asphalt mastic, SSPC-Paint 12, compounded for 15-mil dry film thickness per coat. Provide inert-type noncorrosive compound free of asbestos fibers, sulfur components, and other deleterious impurities.

D. Fasteners: Same metal as metals being fastened, or nonmagnetic stainless steel or other noncorrosive metal as recommended by roof accessory manufacturer. Match finish of exposed fasteners with finish of material being fastened. Provide nonremovable fastener heads to exterior exposed fasteners.

E. Gaskets: Manufacturer's standard tubular or fingered design of neoprene, EPDM, or PVC; or flat design of foam rubber, sponge neoprene, or cork.

F. Elastomeric Sealant: ASTM C 920, silicone sealant; of type, grade, class, and use classifications required to seal joints in sheet metal flashing and trim and remain watertight.

G. Butyl Sealant: ASTM C 1311, single-component, solvent-release butyl rubber sealant, polyisobutylene plasticized, and heavy bodied for hooked-type expansion joints with limited movement.

H. Roofing Cement: ASTM D 4586, nonasbestos, fibrated asphalt cement designed for trowel application or other adhesive compatible with roofing system.

2.4 ROOF CURBS

A. Roof Curbs: Provide metal roof curbs, internally reinforced and capable of supporting superimposed live and dead loads, including equipment loads and other construction to be supported on roof curbs. Fabricate with welded or sealed mechanical corner joints, with stepped integral metal cant raised the thickness of roof insulation and integral formed mounting flange at perimeter bottom. Coordinate dimensions with rough-in information or Shop Drawings of equipment to be supported.

1. Available Manufacturers:

    a. Colony Custom Curbs.
    b. Commodity Products Company, Inc.
    c. Conn-Fab Sales, Inc.

d. Curbs Plus Inc.
e. Custom Curb, Inc.
f. LM Curbs.
g. Loren Cook Company.
h. Metallic Products Corporation.
i. Pate Company (The).
j. Roof Products & Systems Corporation.
k. Roof Products, Inc.
l. Thaler Metal Industries Ltd.
m. ThyCurb; Div. of Thybar Corporation.
n. Uni-Curb, Inc.
o. Vent Products Company, Inc.

2. Material: Aluminum sheet, 0.090 inch thick.
3. Liner: Same material as curb, of manufacturer's standard thickness and finish.
4. Factory install wood nailers at tops of curbs.
5. On ribbed or fluted metal roofs, form flange at perimeter bottom to conform to roof profile.
6. Factory insulate curbs with 1-1/2-inch- thick, glass-fiber board insulation.
7. Curb height may be determined by adding thickness of roof insulation and minimum base flashing height recommended by roofing membrane manufacturer. Fabricate units to minimum height of 12 inches, unless otherwise indicated.
8. Sloping Roofs: Where slope of roof deck exceeds 1:48, fabricate curb units with water diverter or cricket and with height tapered to match slope to level tops of units.

PART 3 - EXECUTION

3.1 EXAMINATION

A. Examine substrates, areas, and conditions, with Installer present, to verify actual locations, dimensions, and other conditions affecting performance of work.

1. Verify that substrate is sound, dry, smooth, clean, sloped for drainage, and securely anchored and is ready to receive roof accessories.
2. Verify dimensions of roof openings for roof accessories.
3. Proceed with installation only after unsatisfactory conditions have been corrected.

3.2 INSTALLATION

A. General: Install roof accessories according to manufacturer's written instructions. Anchor roof accessories securely in place and capable of resisting forces specified. Use fasteners, separators, sealants, and other miscellaneous items as required for completing roof accessory installation. Install roof accessories to resist exposure to weather without failing, rattling, leaking, and fastener disengagement.

B. Install roof accessories to fit substrates and to result in watertight performance.

C. Metal Protection: Where dissimilar metals will contact each other or corrosive substrates, protect against galvanic action by painting contact surfaces with bituminous coating or by other permanent separation as recommended by manufacturer.

1. Coat concealed side of uncoated aluminum roof accessories with bituminous coating where in contact with wood, ferrous metal, or cementitious construction.
2. Underlayment: Where installing exposed-to-view components of roof accessories directly on cementitious or wood substrates, install a course of felt underlayment and cover with a slip sheet, or install a course of polyethylene underlayment.
3. Bed flanges in thick coat of asphalt roofing cement where required by roof accessory manufacturers for waterproof performance.

D. Install roof accessories level, plumb, true to line and elevation, and without warping, jogs in alignment, excessive oil canning, buckling, or tool marks.

E. Roof Curb Installation:

1. Set roof curb so top surface of roof curb is level.

F. Seal joints with elastomeric sealant as required by manufacturer of roof accessories.

3.3 TOUCH UP

A. Touch up factory-primed surfaces with compatible primer ready for field painting in accordance with Division 9 painting Sections.

B. Galvanized Surfaces: Clean field welds, bolted connections, and abraded areas and repair galvanizing to comply with ASTM A 780.

3.4 CLEANING

A. Clean exposed surfaces according to manufacturer's written instructions.

END OF SECTION 07720

SECTION 07841
THROUGH-PENETRATION FIRESTOP SYSTEMS

PART 1 - GENERAL

1.1 RELATED DOCUMENTS

A. Drawings and general provisions of the Contract, including General and Supplementary Conditions and Division 1 Specification Sections, apply to this Section.

1.2 SUMMARY

A. This Section includes through-penetration firestop systems for penetrations through fire-resistance-rated constructions, including both empty openings and openings containing penetrating items.

B. Related Sections include the following:

1. Division 13 Sections specifying fire-suppression piping penetrations.
2. Division 15 Sections specifying duct and piping penetrations.
3. Division 16 Sections specifying cable and conduit penetrations.

1.3 PERFORMANCE REQUIREMENTS

A. General: For penetrations through the following fire-resistance-rated constructions, including both empty openings and openings containing penetrating items, provide through-penetration firestop systems that are produced and installed to resist spread of fire according to requirements indicated, resist passage of smoke and other gases, and maintain original fire-resistance rating of construction penetrated.

1. Fire-resistance-rated walls including fire walls, fire partitions, fire barriers and smoke barriers.

B. Rated Systems: Provide through-penetration firestop systems with the following ratings determined per ASTM E 814:

1. F-Rated Systems: Provide through-penetration firestop systems with F-ratings indicated, but not less than that equaling or exceeding fire-resistance rating of constructions penetrated.
2. T-Rated Systems: For the following conditions, provide through-penetration firestop systems with T-ratings indicated, as well as F-ratings, where systems protect penetrating items exposed to potential contact with adjacent materials in occupiable floor areas:

a. Penetrations located outside wall cavities.
b. Penetrations located outside fire-resistance-rated shaft enclosures.

3. L-Rated Systems: Where through-penetration firestop systems are indicated in smoke barriers, provide through-penetration firestop systems with L-ratings of not more than 3.0 cfm/sq. ft at both ambient temperatures and 400 deg F.

C. For through-penetration firestop systems exposed to view, traffic, moisture, and physical damage, provide products that, after curing, do not deteriorate when exposed to these conditions both during and after construction.

1. For piping penetrations for plumbing and wet-pipe sprinkler systems, provide moisture-resistant through-penetration firestop systems.
2. For floor penetrations with annular spaces exceeding 4 inches in width and exposed to possible loading and traffic, provide firestop systems capable of supporting floor loads involved, either by installing floor plates or by other means.
3. For penetrations involving insulated piping, provide through-penetration firestop systems not requiring removal of insulation.

D. For through-penetration firestop systems exposed to view, provide products with flame-spread and smoke-developed indexes of less than 25 and 450, respectively, as determined per ASTM E 84.

1.4 SUBMITTALS

A. Product Data: For each type of product indicated.

B. Shop Drawings: For each through-penetration firestop system, show each type of construction condition penetrated, relationships to adjoining construction, and type of penetrating item. Include firestop design designation of qualified testing and inspecting agency that evidences compliance with requirements for each condition indicated.

1. Submit documentation, including illustrations, from a qualified testing and inspecting agency that is applicable to each through-penetration firestop system configuration for construction and penetrating items.

C. Qualification Data: For Installer.

D. Product Certificates: For through-penetration firestop system products, signed by product manufacturer.

E. Product Test Reports: From a qualified testing agency indicating through-penetration firestop system complies with requirements, based on comprehensive testing of current products.

1.5 QUALITY ASSURANCE

A. Installer Qualifications: A firm experienced in installing through-penetration firestop systems similar in material, design, and extent to that indicated for this Project, whose work has resulted in construction with a record of successful performance. Qualifications include having the

necessary experience, staff, and training to install manufacturer's products per specified requirements. Manufacturer's willingness to sell its through-penetration firestop system products to Contractor or to Installer engaged by Contractor does not in itself confer qualification on buyer.

B. Installation Responsibility: Assign installation of through-penetration firestop systems in Project to a single qualified installer.

C. Source Limitations: Obtain through-penetration firestop systems, for each kind of penetration and construction condition indicated, through one source from a single manufacturer.

D. Fire-Test-Response Characteristics: Provide through-penetration firestop systems that comply with the following requirements and those specified in Part 1 "Performance Requirements" Article:

1. Firestopping tests are performed by a qualified testing and inspecting agency. A qualified testing and inspecting agency is UL or another agency performing testing and follow-up inspection services for firestop systems acceptable to authorities having jurisdiction.

E. Preinstallation Conference: Conduct conference at Project site to comply with requirements in Division 1 Section "Project Management and Coordination."

1.6 DELIVERY, STORAGE, AND HANDLING

A. Deliver through-penetration firestop system products to Project site in original, unopened containers or packages with intact and legible manufacturers' labels identifying product and manufacturer, date of manufacture, lot number, shelf life if applicable, qualified testing and inspecting agency's classification marking applicable to Project, curing time, and mixing instructions for multicomponent materials.

B. Store and handle materials for through-penetration firestop systems to prevent their deterioration or damage due to moisture, temperature changes, contaminants, or other causes.

1.7 PROJECT CONDITIONS

A. Environmental Limitations: Do not install through-penetration firestop systems when ambient or substrate temperatures are outside limits permitted by through-penetration firestop system manufacturers or when substrates are wet due to rain, frost, condensation, or other causes.

B. Ventilate through-penetration firestop systems per manufacturer's written instructions by natural means or, where this is inadequate, forced-air circulation.

1.8 COORDINATION

A. Coordinate construction of openings and penetrating items to ensure that through-penetration firestop systems are installed according to specified requirements.

B. Coordinate sizing of sleeves, openings, core-drilled holes, or cut openings to accommodate through-penetration firestop systems.

C. Notify Owner's inspecting agency at least seven days in advance of through-penetration firestop system installations; confirm dates and times on days preceding each series of installations.

D. Do not cover up through-penetration firestop system installations that will become concealed behind other construction until each installation has been examined by building inspector, if required by authorities having jurisdiction.

PART 2 - PRODUCTS

2.1 MANUFACTURERS

A. Products: Subject to compliance with requirements, provide one of the through-penetration firestop systems indicated for each application that are produced by one of the following manufacturers:

1. Grace, W. R. & Co. - Conn.
2. Hilti, Inc.
3. Johns Manville.
4. 3M; Fire Protection Products Division.
5. Tremco; Sealant/Weatherproofing Division.
6. USG Corporation.

2.2 FIRESTOPPING, GENERAL

A. Compatibility: Provide through-penetration firestop systems that are compatible with one another; with the substrates forming openings; and with the items, if any, penetrating through-penetration firestop systems, under conditions of service and application, as demonstrated by through-penetration firestop system manufacturer based on testing and field experience.

B. Accessories: Provide components for each through-penetration firestop system that are needed to install fill materials and to comply with Part 1 "Performance Requirements" Article. Use only components specified by through-penetration firestop system manufacturer and approved by qualified testing and inspecting agency for firestop systems indicated. Accessories include, but are not limited to, the following items:

1. Permanent forming/damming/backing materials, including the following:

    a. Slag-/rock-wool-fiber insulation.
    b. Sealants used in combination with other forming/damming/backing materials to prevent leakage of fill materials in liquid state.
    c. Fire-rated form board.
    d. Fillers for sealants.

2. Temporary forming materials.
3. Substrate primers.

4. Collars.
5. Steel sleeves.

2.3 FILL MATERIALS

A. General: Provide through-penetration firestop systems containing the types of fill materials indicated in the Through-Penetration Firestop System Schedule at the end of Part 3 by referencing the types of materials described in this Article. Fill materials are those referred to in directories of referenced testing and inspecting agencies as "fill," "void," or "cavity" materials.

B. Cast-in-Place Firestop Devices: Factory-assembled devices for use in cast-in-place concrete floors and consisting of an outer metallic sleeve lined with an intumescent strip, a radial extended flange attached to one end of the sleeve for fastening to concrete formwork, and a neoprene gasket.

C. Latex Sealants: Single-component latex formulations that after cure do not re-emulsify during exposure to moisture.

D. Firestop Devices: Factory-assembled collars formed from galvanized steel and lined with intumescent material sized to fit specific diameter of penetrant.

E. Intumescent Composite Sheets: Rigid panels consisting of aluminum-foil-faced elastomeric sheet bonded to galvanized steel sheet.

F. Intumescent Putties: Nonhardening dielectric, water-resistant putties containing no solvents, inorganic fibers, or silicone compounds.

G. Intumescent Wrap Strips: Single-component intumescent elastomeric sheets with aluminum foil on one side.

H. Mortars: Prepackaged dry mixes consisting of a blend of inorganic binders, hydraulic cement, fillers, and lightweight aggregate formulated for mixing with water at Project site to form a nonshrinking, homogeneous mortar.

I. Pillows/Bags: Reusable heat-expanding pillows/bags consisting of glass-fiber cloth cases filled with a combination of mineral-fiber, water-insoluble expansion agents, and fire-retardant additives.

J. Silicone Foams: Multicomponent, silicone-based liquid elastomers that, when mixed, expand and cure in place to produce a flexible, nonshrinking foam.

K. Silicone Sealants: Single-component, silicone-based, neutral-curing elastomeric sealants of grade indicated below:

1. Grade: Pourable (self-leveling) formulation for openings in floors and other horizontal surfaces, and nonsag formulation for openings in vertical and other surfaces requiring a nonslumping, gunnable sealant, unless indicated firestop system limits use to nonsag grade for both opening conditions.
2. Grade for Horizontal Surfaces: Pourable (self-leveling) formulation for openings in floors and other horizontal surfaces.

3. Grade for Vertical Surfaces: Nonsag formulation for openings in vertical and other surfaces.

2.4 MIXING

A. For those products requiring mixing before application, comply with through-penetration firestop system manufacturer's written instructions for accurate proportioning of materials, water (if required), type of mixing equipment, selection of mixer speeds, mixing containers, mixing time, and other items or procedures needed to produce products of uniform quality with optimum performance characteristics for application indicated.

PART 3 - EXECUTION

3.1 EXAMINATION

A. Examine substrates and conditions, with Installer present, for compliance with requirements for opening configurations, penetrating items, substrates, and other conditions affecting performance of work.

1. Proceed with installation only after unsatisfactory conditions have been corrected.

3.2 PREPARATION

A. Surface Cleaning: Clean out openings immediately before installing through-penetration firestop systems to comply with firestop system manufacturer's written instructions and with the following requirements:

1. Remove from surfaces of opening substrates and from penetrating items foreign materials that could interfere with adhesion of through-penetration firestop systems.
2. Clean opening substrates and penetrating items to produce clean, sound surfaces capable of developing optimum bond with through-penetration firestop systems. Remove loose particles remaining from cleaning operation.
3. Remove laitance and form-release agents from concrete.

B. Priming: Prime substrates where recommended in writing by through-penetration firestop system manufacturer using that manufacturer's recommended products and methods. Confine primers to areas of bond; do not allow spillage and migration onto exposed surfaces.

C. Masking Tape: Use masking tape to prevent through-penetration firestop systems from contacting adjoining surfaces that will remain exposed on completion of Work and that would otherwise be permanently stained or damaged by such contact or by cleaning methods used to remove smears from firestop system materials. Remove tape as soon as possible without disturbing firestop system's seal with substrates.

3.3 THROUGH-PENETRATION FIRESTOP SYSTEM INSTALLATION

A. General: Install through-penetration firestop systems to comply with Part 1 "Performance Requirements" Article and with firestop system manufacturer's written installation instructions and published drawings for products and applications indicated.

B. Install forming/damming/backing materials and other accessories of types required to support fill materials during their application and in the position needed to produce cross-sectional shapes and depths required to achieve fire ratings indicated.

1. After installing fill materials and allowing them to fully cure, remove combustible forming materials and other accessories not indicated as permanent components of firestop systems.

C. Install fill materials for firestop systems by proven techniques to produce the following results:

1. Fill voids and cavities formed by openings, forming materials, accessories, and penetrating items as required to achieve fire-resistance ratings indicated.
2. Apply materials so they contact and adhere to substrates formed by openings and penetrating items.
3. For fill materials that will remain exposed after completing Work, finish to produce smooth, uniform surfaces that are flush with adjoining finishes.

3.4 IDENTIFICATION

A. Identify through-penetration firestop systems with preprinted metal or plastic labels. Attach labels permanently to surfaces adjacent to and within 6 inches of edge of the firestop systems so that labels will be visible to anyone seeking to remove penetrating items or firestop systems. Use mechanical fasteners for metal labels. For plastic labels, use self-adhering type with adhesives capable of permanently bonding labels to surfaces on which labels are placed and, in combination with label material, will result in partial destruction of label if removal is attempted. Include the following information on labels:

1. The words "Warning - Through-Penetration Firestop System - Do Not Disturb. Notify Building Management of Any Damage."
2. Contractor's name, address, and phone number.
3. Through-penetration firestop system designation of applicable testing and inspecting agency.
4. Date of installation.
5. Through-penetration firestop system manufacturer's name.
6. Installer's name.

3.5 FIELD QUALITY CONTROL

A. Inspecting Agency: Owner will engage a qualified, independent inspecting agency to inspect through-penetration firestops. Independent inspecting agency shall comply with ASTM E 2174 requirements including those related to qualifications, conducting inspections, and preparing test reports.

B. Where deficiencies are found, repair or replace through-penetration firestop systems so they comply with requirements.

C. Proceed with enclosing through-penetration firestop systems with other construction only after inspection reports are issued and firestop installations comply with requirements.

3.6 CLEANING AND PROTECTING

A. Clean off excess fill materials adjacent to openings as Work progresses by methods and with cleaning materials that are approved in writing by through-penetration firestop system manufacturers and that do not damage materials in which openings occur.

B. Provide final protection and maintain conditions during and after installation that ensure that through-penetration firestop systems are without damage or deterioration at time of Substantial Completion. If, despite such protection, damage or deterioration occurs, cut out and remove damaged or deteriorated through-penetration firestop systems immediately and install new materials to produce systems complying with specified requirements.

END OF SECTION 07841

SECTION 07842
FIRE-RESISTIVE JOINT SYSTEMS

PART 1 - GENERAL

1.1 RELATED DOCUMENTS

A. Drawings and general provisions of the Contract, including General and Supplementary Conditions and Division 1 Specification Sections, apply to this Section.

1.2 SUMMARY

A. This Section includes fire-resistive joint systems for the following:

1. Head-of-wall joints.

B. Related Sections include the following:

1. Division 7 Section "Roof Expansion Assemblies" for fire-resistive roof expansion assemblies.
2. Division 7 Section "Through-Penetration Firestop Systems" for systems installed in openings in walls and floors with and without penetrating items.
3. Division 7 Section "Joint Sealants" for non-fire-resistive joint sealants.

1.3 PERFORMANCE REQUIREMENTS

A. General: Provide fire-resistive joint systems that are produced and installed to resist spread of fire according to requirements indicated, resist passage of smoke and other gases, and maintain original fire-resistance rating of assembly in which fire-resistive joint systems are installed.

B. Joint Systems in and between Fire-Resistance-Rated Constructions: Provide systems with assembly ratings equaling or exceeding the fire-resistance ratings of construction that they join, and with movement capabilities and L-ratings indicated as determined by UL 2079.

C. For fire-resistive systems exposed to view, provide products with flame-spread and smoke-developed indexes of less than 25 and 450, respectively, as determined per ASTM E 84.

1.4 SUBMITTALS

A. Product Data: For each type of product indicated.

B. Shop Drawings: For each fire-resistive joint system, show each kind of construction condition in which joints are installed; also show relationships to adjoining construction. Include fire-resistive joint system design designation of testing and inspecting agency acceptable to

authorities having jurisdiction that demonstrates compliance with requirements for each condition indicated.

1. Submit documentation, including illustrations, from a qualified testing and inspecting agency that is applicable to each fire-resistive joint system configuration for construction and penetrating items.

C. Product Certificates: For each type of fire-resistive joint system, signed by product manufacturer.

D. Qualification Data: For Installer.

1.5 QUALITY ASSURANCE

A. Installer Qualifications: A firm that has been approved by FMG according to FMG 4991, "Approval of Firestop Contractors."

B. Installation Responsibility: Assign installation of through-penetration firestop systems and fire-resistive joint systems in Project to a single qualified installer.

C. Source Limitations: Obtain fire-resistive joint systems, for each kind of joint and construction condition indicated, through one source from a single manufacturer.

D. Fire-Test-Response Characteristics: Provide fire-resistive joint systems that comply with the following requirements and those specified in Part 1 "Performance Requirements" Article:

1. Fire-resistance tests are performed by a qualified testing and inspecting agency. A qualified testing and inspecting agency is UL or another agency performing testing and follow-up inspection services for fire-resistive joint systems acceptable to authorities having jurisdiction.

1.6 DELIVERY, STORAGE, AND HANDLING

A. Deliver fire-resistive joint system products to Project site in original, unopened containers or packages with qualified testing and inspecting agency's classification marking applicable to Project and with intact and legible manufacturers' labels identifying product and manufacturer, date of manufacture, lot number, shelf life, curing time, and mixing instructions for multicomponent materials.

B. Store and handle materials for fire-resistive joint systems to prevent their deterioration or damage due to moisture, temperature changes, contaminants, or other causes.

1.7 PROJECT CONDITIONS

A. Environmental Limitations: Do not install fire-resistive joint systems when ambient or substrate temperatures are outside limits permitted by fire-resistive joint system manufacturers or when substrates are wet due to rain, frost, condensation, or other causes.

B. Ventilate fire-resistive joint systems per manufacturer's written instructions by natural means or, if this is inadequate, forced-air circulation.

1.8 COORDINATION

A. Coordinate construction of joints to ensure that fire-resistive joint systems are installed according to specified requirements.

B. Coordinate sizing of joints to accommodate fire-resistive joint systems.

PART 2 - PRODUCTS

2.1 MANUFACTURERS

A. Available Products: Subject to compliance with requirements, fire-resistive joint systems that may be incorporated into the Work include, but are not limited to, those systems indicated in the Fire-Resistive Joint System Schedule at the end of Part 3.

2.2 FIRE-RESISTIVE JOINT SYSTEMS

A. Compatibility: Provide fire-resistive joint systems that are compatible with joint substrates, under conditions of service and application, as demonstrated by fire-resistive joint system manufacturer based on testing and field experience.

B. Accessories: Provide components of fire-resistive joint systems, including primers and forming materials, that are needed to install fill materials and to comply with Part 1 "Performance Requirements" Article. Use only components specified by fire-resistive joint system manufacturer and approved by the qualified testing and inspecting agency for systems indicated.

PART 3 - EXECUTION

3.1 EXAMINATION

A. Examine substrates and conditions, with Installer present, for compliance with requirements for joint configurations, substrates, and other conditions affecting performance of work.

1. Proceed with installation only after unsatisfactory conditions have been corrected.

3.2 PREPARATION

A. Surface Cleaning: Clean joints immediately before installing fire-resistive joint systems to comply with fire-resistive joint system manufacturer's written instructions and the following requirements:

1. Remove from surfaces of joint substrates foreign materials that could interfere with adhesion of fill materials.
2. Clean joint substrates to produce clean, sound surfaces capable of developing optimum bond with fill materials. Remove loose particles remaining from cleaning operation.
3. Remove laitance and form-release agents from concrete.

B. Priming: Prime substrates where recommended in writing by fire-resistive joint system manufacturer using that manufacturer's recommended products and methods. Confine primers to areas of bond; do not allow spillage and migration onto exposed surfaces.

C. Masking Tape: Use masking tape to prevent fill materials of fire-resistive joint system from contacting adjoining surfaces that will remain exposed on completion of Work and that would otherwise be permanently stained or damaged by such contact or by cleaning methods used to remove smears from fire-resistive joint system materials. Remove tape as soon as possible without disturbing fire-resistive joint system's seal with substrates or damaging adjoining surfaces.

3.3 INSTALLATION

A. General: Install fire-resistive joint systems to comply with Part 1 "Performance Requirements" Article and fire-resistive joint system manufacturer's written installation instructions for products and applications indicated.

B. Install forming/packing/backing materials and other accessories of types required to support fill materials during their application and in position needed to produce cross-sectional shapes and depths required to achieve fire ratings indicated.

C. Install fill materials for fire-resistive joint systems by proven techniques to produce the following results:

1. Fill voids and cavities formed by openings and forming/packing/backing materials as required to achieve fire-resistance ratings indicated.
2. Apply fill materials so they contact and adhere to substrates formed by joints.
3. For fill materials that will remain exposed after completing Work, finish to produce smooth, uniform surfaces that are flush with adjoining finishes.

3.4 CLEANING AND PROTECTING

A. Clean off excess fill materials adjacent to joints as Work progresses by methods and with cleaning materials that are approved in writing by fire-resistive joint system manufacturers and that do not damage materials in which openings occur.

B. Provide final protection and maintain conditions during and after installation that ensure fire-resistive joint systems are without damage or deterioration at time of Substantial Completion. If damage or deterioration occurs despite such protection, cut out and remove damaged or deteriorated fire-resistive joint systems immediately and install new materials to produce fire-resistive joint systems complying with specified requirements.

END OF SECTION 07842

SECTION 07920
JOINT SEALANTS

PART 1 - GENERAL

1.1 RELATED DOCUMENTS

A. Drawings and general provisions of the Contract, including General and Supplementary Conditions and Division 1 Specification Sections, apply to this Section.

1.2 SUMMARY

A. This Section includes joint sealants for the applications indicated in the Joint-Sealant Schedule at the end of Part 3.

1. Exterior joints in the following vertical surfaces and horizontal nontraffic surfaces:

   a. Construction joints in cast-in-place concrete.
   b. Joints between plant pre-cast structural concrete planks and between planks and unit masonry.
   c. Control and expansion joints in unit masonry.
   d. Joints between metal panels.
   e. Joints between different materials listed above.
   f. Perimeter joints between materials listed above and frames of doors, windows and louvers.
   g. Other joints as indicated.

2. Interior joints in the following vertical surfaces and horizontal nontraffic surfaces:

   a. Control and expansion joints on exposed interior surfaces of exterior walls.
   b. Perimeter joints of exterior openings where indicated.
   c. Vertical joints on exposed surfaces of interior unit masonry, walls and partitions.
   d. Joints on underside of plant-precast structural concrete.
   e. Joints between plant pre-cast structural concrete planks and between planks and unit masonry.
   f. Perimeter joints between interior wall surfaces and frames of interior doors and windows.
   g. Other joints as indicated.

3. Interior joints in the following horizontal traffic surfaces:

   a. Isolation joints in cast-in-place concrete slabs.
   b. Other joints as indicated.

B. Related Sections include the following:
   1. Division 2 Section "Pavement Joint Sealants" for sealing joints in pavements, walkways, and curbing.
   2. Division 4 Section "Unit Masonry Assemblies" for masonry control and expansion joint fillers and gaskets.
   3. Division 7 Section "Fire-Resistive Joint Systems" for sealing joints in fire-resistance-rated construction.
   4. Division 8 Section "Glazing" for glazing sealants.
   5. Division 9 Section "Gypsum Board Assemblies" for sealing perimeter joints of gypsum board partitions to reduce sound transmission.
   6. Division 9 Section "Acoustical Panel Ceilings" and "Acoustical Tile Ceilings" for sealing edge moldings at perimeters of acoustical ceilings.

1.3 PERFORMANCE REQUIREMENTS

A. Provide elastomeric joint sealants that establish and maintain watertight and airtight continuous joint seals without staining or deteriorating joint substrates.

1.4 SUBMITTALS

A. Product Data: For each joint-sealant product indicated.

B. Samples for Initial Selection: Manufacturer's color charts consisting of strips of cured sealants showing the full range of colors available for each product exposed to view.

C. Product Certificates: For each type of joint sealant and accessory, signed by product manufacturer.

D. Qualification Data: For Installer.

E. Compatibility and Adhesion Test Reports: From sealant manufacturer, indicating the following:

   1. Materials forming joint substrates and joint-sealant backings have been tested for compatibility and adhesion with joint sealants.
   2. Interpretation of test results and written recommendations for primers and substrate preparation needed for adhesion.

F. Product Test Reports: Based on comprehensive testing of product formulations performed by a qualified testing agency, indicating that sealants comply with requirements.

G. Warranties: Special warranties specified in this Section.

1.5 QUALITY ASSURANCE

A. Installer Qualifications: Manufacturer's authorized Installer who is approved or licensed for installation of elastomeric sealants required for this Project.

B. Source Limitations: Obtain each type of joint sealant through one source from a single manufacturer.

C. Product Testing: Obtain test results for "Product Test Reports" Paragraph in "Submittals" Article from a qualified testing agency based on testing current sealant formulations within a 36-month period preceding the commencement of the Work.

1. Testing Agency Qualifications: An independent testing agency qualified according to ASTM C 1021 to conduct the testing indicated, as documented according to ASTM E 548.
2. Test elastomeric joint sealants for compliance with requirements specified by reference to ASTM C 920, and where applicable, to other standard test methods.

D. Mockups: Build mockups incorporating sealant joints, as follows, to verify selections made under sample submittals and to demonstrate aesthetic effects and set quality standards for materials and execution:

1. Joints in mockups of assemblies specified in other Sections that are indicated to receive elastomeric joint sealants, which are specified by reference to this Section.

E. Preinstallation Conference: Conduct conference at Project site to comply with requirements in Division 1 Section "Project Management and Coordination."

1.6 PROJECT CONDITIONS

A. Do not proceed with installation of joint sealants under the following conditions:

1. When ambient and substrate temperature conditions are outside limits permitted by joint-sealant manufacturer or are below 40 deg F.
2. When joint substrates are wet.
3. Where joint widths are less than those allowed by joint-sealant manufacturer for applications indicated.
4. Contaminants capable of interfering with adhesion have not yet been removed from joint substrates.

1.7 WARRANTY

A. Special Installer's Warranty: Installer's standard form in which Installer agrees to repair or replace elastomeric joint sealants that do not comply with performance and other requirements specified in this Section within specified warranty period.

1. Warranty Period: Two years from date of Substantial Completion.

B. Special Manufacturer's Warranty: Manufacturer's standard form in which elastomeric sealant manufacturer agrees to furnish elastomeric joint sealants to repair or replace those that do not comply with performance and other requirements specified in this Section within specified warranty period.

1. Warranty Period: Silicone 20 years and all other types 5 years from date of Substantial Completion.

C. Special warranties specified in this Article exclude deterioration or failure of elastomeric joint sealants from the following:

1. Movement of the structure resulting in stresses on the sealant exceeding sealant manufacturer's written specifications for sealant elongation and compression caused by structural settlement or errors attributable to design or construction.
2. Disintegration of joint substrates from natural causes exceeding design specifications.
3. Mechanical damage caused by individuals, tools, or other outside agents.
4. Changes in sealant appearance caused by accumulation of dirt or other atmospheric contaminants.

PART 2 - PRODUCTS

2.1 MANUFACTURERS

A. Products: Subject to compliance with requirements, provide one of the products listed in other Part 2 articles.

2.2 MATERIALS, GENERAL

A. Compatibility: Provide joint sealants, backings, and other related materials that are compatible with one another and with joint substrates under conditions of service and application, as demonstrated by sealant manufacturer, based on testing and field experience.

B. VOC Content of Interior Sealants: Provide interior sealants and sealant primers that comply with the following limits for VOC content when calculated according to 40 CFR 59, Subpart D (EPA Method 24):

1. Sealants: 250 g/L.
2. Sealant Primers for Nonporous Substrates: 250 g/L.
3. Sealant Primers for Porous Substrates: 775 g/L.

C. Colors of Exposed Joint Sealants: As selected by Architect from manufacturer's full range.

2.3 ELASTOMERIC JOINT SEALANTS

A. Elastomeric Sealants: Comply with ASTM C 920 and other requirements indicated for each liquid-applied chemically curing sealant specified, including those referencing ASTM C 920 classifications for type, grade, class, and uses related to exposure and joint substrates.

B. Stain-Test-Response Characteristics: Where elastomeric sealants are specified to be nonstaining to porous substrates, provide products that have undergone testing according to ASTM C 1248 and have not stained porous joint substrates indicated for Project.

C. Single-Component Neutral- and Basic-Curing Silicone Sealant **ES-1**:

1. Products:

a. Dow Corning Corporation; 790.
b. Tremco; Spectrem 1 (Basic).
c. Pecora Corporation; 864.
d. Pecora Corporation; 890.
e. Polymeric Systems Inc.; PSI-641.
f. Sonneborn, Division of ChemRex Inc.; Omniseal.
g. Tremco; Spectrem 3.
h. Dow Corning Corporation; 791.
i. Dow Corning Corporation; 795
j. Pecora Corporation; 865.
k. Pecora Corporation; 895.
l. Pecora Corporation; 898.

2. Type and Grade: S (single component) and NS (nonsag).
3. Class: 100/50.
4. Use Related to Exposure: NT (nontraffic).
5. Uses Related to Joint Substrates: M, G, A, and, as applicable to joint substrates indicated, O.

a. Use O Joint Substrates: Coated glass, color anodic aluminum, aluminum coated with a high-performance coating, galvanized steel and brick.

D. Single-Component Mildew-Resistant Neutral-Curing Silicone Sealant **ES-2**:

1. Available Products:

a. Pecora Corporation; 898.
b. Tremco; Tremsil 600 White.

2. Type and Grade: S (single component) and NS (nonsag).
3. Class: 25.
4. Use Related to Exposure: NT (nontraffic).
5. Uses Related to Joint Substrates: M, G, A, and, as applicable to joint substrates indicated, O.

a. Use O Joint Substrates: Coated glass, color anodic aluminum, aluminum coated with a high-performance coating, galvanized steel, ceramic tile and other Use O substrates.

E. Multicomponent Nonsag Urethane Sealant **ES-3**:

1. Available Products:

a. Pecora Corporation; Dynatrol II.
b. Tremco; Dymeric 511.
c. Tremco; Vulkem 922.

2. Type and Grade: M (multicomponent) and NS (nonsag).
3. Class: 50.
4. Use[s] Related to Exposure: NT (nontraffic) and T (traffic).

5. Uses Related to Joint Substrates: M, G, A, and, as applicable to joint substrates indicated, O.

    a. Use O Joint Substrates: Color anodic aluminum, aluminum coated with a high-performance coating, galvanized steel, brick and ceramic tile.

F. Multicomponent Pourable Urethane Sealant **ES-4**:

1. Available Products:

    a. Pecora Corporation; Urexpan NR-200.
    b. Polymeric Systems, Inc.; PSI-270SL.
    c. Tremco; THC-901.
    d. Tremco; THC-900.
    e. Tremco; Vulkem 245.
    f. Pecora Corporation; Urexpan NR 300, Type H.
    g. Pecora Corporation; Urexpan NR 300, Type M.

2. Type and Grade: M (multicomponent) and NS (nonsag).
3. Class: 25.
4. Use[s] Related to Exposure: T (traffic).
5. Uses Related to Joint Substrates: M, A and as applicable to joint substrates indicated, O.

    a. Use O Joint Substrates: Color anodic aluminum, aluminum coated with a high-performance coating, galvanized steel and brick.

2.4 ACOUSTICAL JOINT SEALANTS

A. Acoustical Sealant for Exposed and Concealed Joints **AS-1**: Manufacturer's standard nonsag, paintable, nonstaining latex sealant complying with ASTM C 834 and the following:

1. Product effectively reduces airborne sound transmission through perimeter joints and openings in building construction as demonstrated by testing representative assemblies according to ASTM E 90.
2. Available Products:

    a. Pecora Corporation; AC-20 FTR Acoustical and Insulation Sealant.
    b. United States Gypsum Co.; SHEETROCK Acoustical Sealant.

2.5 JOINT-SEALANT BACKING

A. General: Provide sealant backings of material and type that are nonstaining; are compatible with joint substrates, sealants, primers, and other joint fillers; and are approved for applications indicated by sealant manufacturer based on field experience and laboratory testing.

B. Cylindrical Sealant Backings: ASTM C 1330, Type C (closed-cell material with a surface skin) or any of the preceding types, as approved in writing by joint-sealant manufacturer for joint application indicated, and of size and density to control sealant depth and otherwise contribute to producing optimum sealant performance:

C. Elastomeric Tubing Sealant Backings: Neoprene, butyl, EPDM, or silicone tubing complying with ASTM D 1056, nonabsorbent to water and gas, and capable of remaining resilient at temperatures down to minus 26 deg F. Provide products with low compression set and of size and shape to provide a secondary seal, to control sealant depth, and to otherwise contribute to optimum sealant performance.

D. Bond-Breaker Tape: Polyethylene tape or other plastic tape recommended by sealant manufacturer for preventing sealant from adhering to rigid, inflexible joint-filler materials or joint surfaces at back of joint where such adhesion would result in sealant failure. Provide self-adhesive tape where applicable.

2.6 MISCELLANEOUS MATERIALS

A. Primer: Material recommended by joint-sealant manufacturer where required for adhesion of sealant to joint substrates indicated, as determined from preconstruction joint-sealant-substrate tests and field tests.

B. Cleaners for Nonporous Surfaces: Chemical cleaners acceptable to manufacturers of sealants and sealant backing materials, free of oily residues or other substances capable of staining or harming joint substrates and adjacent nonporous surfaces in any way, and formulated to promote optimum adhesion of sealants to joint substrates.

C. Masking Tape: Nonstaining, nonabsorbent material compatible with joint sealants and surfaces adjacent to joints.

PART 3 - EXECUTION

3.1 EXAMINATION

A. Examine joints indicated to receive joint sealants, with Installer present, for compliance with requirements for joint configuration, installation tolerances, and other conditions affecting joint-sealant performance.

B. Proceed with installation only after unsatisfactory conditions have been corrected.

3.2 PREPARATION

A. Surface Cleaning of Joints: Clean out joints immediately before installing joint sealants to comply with joint-sealant manufacturer's written instructions and the following requirements:

1. Remove all foreign material from joint substrates that could interfere with adhesion of joint sealant, including dust, paints (except for permanent, protective coatings tested and approved for sealant adhesion and compatibility by sealant manufacturer), old joint sealants, oil, grease, waterproofing, water repellents, water, surface dirt, and frost.
2. Clean porous joint substrate surfaces by brushing, grinding, blast cleaning, mechanical abrading, or a combination of these methods to produce a clean, sound substrate capable of developing optimum bond with joint sealants. Remove loose particles remaining after

cleaning operations above by vacuuming or blowing out joints with oil-free compressed air. Porous joint substrates include the following:

a. Concrete.
b. Masonry.
c. Unglazed surfaces of ceramic tile.
d. Precast concrete.

3. Remove laitance and form-release agents from concrete.
4. Clean nonporous surfaces with chemical cleaners or other means that do not stain, harm substrates, or leave residues capable of interfering with adhesion of joint sealants. Nonporous joint substrates include the following:

a. Metal.
b. Glass.
c. Porcelain enamel.
d. Glazed surfaces of ceramic tile.

B. Joint Priming: Prime joint substrates, where recommended in writing by joint-sealant manufacturer, based on preconstruction joint-sealant-substrate tests or prior experience. Apply primer to comply with joint-sealant manufacturer's written instructions. Confine primers to areas of joint-sealant bond; do not allow spillage or migration onto adjoining surfaces.

C. Masking Tape: Use masking tape where required to prevent contact of sealant with adjoining surfaces that otherwise would be permanently stained or damaged by such contact or by cleaning methods required to remove sealant smears. Remove tape immediately after tooling without disturbing joint seal.

3.3 INSTALLATION OF JOINT SEALANTS

A. General: Comply with joint-sealant manufacturer's written installation instructions for products and applications indicated, unless more stringent requirements apply.

B. Sealant Installation Standard: Comply with recommendations in ASTM C 1193 for use of joint sealants as applicable to materials, applications, and conditions indicated.

C. Acoustical Sealant Application Standard: Comply with recommendations in ASTM C 919 for use of joint sealants in acoustical applications as applicable to materials, applications, and conditions indicated.

D. Install sealant backings of type indicated to support sealants during application and at position required to produce cross-sectional shapes and depths of installed sealants relative to joint widths that allow optimum sealant movement capability.

1. Do not leave gaps between ends of sealant backings.
2. Do not stretch, twist, puncture, or tear sealant backings.
3. Remove absorbent sealant backings that have become wet before sealant application and replace them with dry materials.

E. Install bond-breaker tape behind sealants where sealant backings are not used between sealants and backs of joints.

F. Install sealants using proven techniques that comply with the following and at the same time backings are installed:

1. Place sealants so they directly contact and fully wet joint substrates.
2. Completely fill recesses in each joint configuration.
3. Produce uniform, cross-sectional shapes and depths relative to joint widths that allow optimum sealant movement capability.

G. Tooling of Nonsag Sealants: Immediately after sealant application and before skinning or curing begins, tool sealants according to requirements specified below to form smooth, uniform beads of configuration indicated; to eliminate air pockets; and to ensure contact and adhesion of sealant with sides of joint.

1. Remove excess sealant from surfaces adjacent to joints.
2. Use tooling agents that are approved in writing by sealant manufacturer and that do not discolor sealants or adjacent surfaces.
3. Provide concave joint configuration per Figure 5A in ASTM C 1193, unless otherwise indicated.
4. Provide flush joint configuration where indicated per Figure 5B in ASTM C 1193.
5. Provide recessed joint configuration of recess depth and at locations indicated per Figure 5C in ASTM C 1193.

    a. Use masking tape to protect surfaces adjacent to recessed tooled joints.

3.4 CLEANING

A. Clean off excess sealant or sealant smears adjacent to joints as the Work progresses by methods and with cleaning materials approved in writing by manufacturers of joint sealants and of products in which joints occur.

3.5 PROTECTION

A. Protect joint sealants during and after curing period from contact with contaminating substances and from damage resulting from construction operations or other causes so sealants are without deterioration or damage at time of Substantial Completion. If, despite such protection, damage or deterioration occurs, cut out and remove damaged or deteriorated joint sealants immediately so installations with repaired areas are indistinguishable from original work.

3.6 JOINT-SEALANT SCHEDULE

A. Joint-Sealant Application **JS-1**: Exterior vertical construction joints in cast-in-place concrete.

1. Joint Sealant: ES-3.
2. Joint-Sealant Color: As selected by Architect from manufacturer's full range.

B. Joint-Sealant Application **JS-2**: Exterior vertical control and expansion joints in unit masonry.

1. Joint Sealant: Single-component neutral- and basic-curing silicone sealant ES-1.
2. Joint-Sealant Color: As selected by Architect from manufacturer's full range.

C. Joint-Sealant Application **JS-3**: Exterior butt joints between metal panels.

1. Joint Sealant: Single-component neutral- and basic-curing silicone sealant ES-1.
2. Joint-Sealant Color: As selected by Architect from manufacturer's full range.

D. Joint-Sealant Application **JS-4**: Vertical control and expansion joints on exposed interior surfaces of exterior walls.

1. Joint Sealant: Multicomponent nonsag urethane sealant ES-3.
2. Joint-Sealant Color: As selected by Architect from manufacturer's full range.

E. Joint-Sealant Application **JS-5**: Interior perimeter joints of exterior openings.

1. Joint Sealant: Multicomponent nonsag urethane sealant ES-3.
2. Joint-Sealant Color: As selected by Architect from manufacturer's full range.

F. Joint-Sealant Application **JS-6**: Interior joints between plumbing fixtures and adjoining walls, floors, and counters.

1. Joint Sealant: Single-component mildew-resistant neutral-curing silicone sealant ES-3.
2. Joint-Sealant Color: As selected by Architect from manufacturer's full range.

G. Joint-Sealant Application **JS-7**: Vertical joints on exposed surfaces of interior unit masonry and concrete, walls and partitions, and perimeter joints between interior wall surfaces and frames of interior doors, windows and elevator entrances.

1. Joint Sealant: Multicomponent nonsag urethane sealant ES-3.
2. Joint-Sealant Color: White.

H. Joint-Sealant Application **JS-8**: Exterior perimeter joints between masonry and frames of doors, windows and louvers.

1. Joint Sealant: Single-component neutral- and basic-curing silicone sealant ES-1.
2. Joint-Sealant Color: As selected by Architect from manufacturer's full range.

I. Joint-Sealant Application **JS-9**: Interior control, expansion and isolation joints in horizontal concrete traffic surfaces.

1. Joint Sealant: Multicomponent pourable urethane sealant ES-4.
2. Joint Sealant Color: As selected by Architect from manufacturer's full range.

J. Joint-Sealant Application **JS-10**: Bottom of plant precast structural concrete planks.

1. Joint Sealant: Multicomponent non-sag urethane sealant ES-3.
2. Joint Sealant Color: As selected by Architect from manufacturer's full range.

END OF SECTION 07920

SECTION 08111
STANDARD STEEL DOORS AND FRAMES

PART 1 - GENERAL

1.1 RELATED DOCUMENTS

A. Drawings and general provisions of the Contract, including General and Supplementary Conditions and Division 1 Specification Sections, apply to this Section.

1.2 SUMMARY

A. This Section includes the following:

1. Standard hollow-metal steel doors.
2. Standard hollow-metal steel frames.

B. Related Sections include the following:

1. Division 4 Section "Unit Masonry Assemblies" for building anchors into and grouting standard steel frames in masonry construction.
2. Division 8 Section "Glazing" for glazed lites in standard steel doors and frames.
3. Division 8 Sections for door hardware for standard steel doors.
4. Division 9 painting Sections for field painting standard steel doors and frames.

1.3 DEFINITIONS

A. Minimum Thickness: Minimum thickness of base metal without coatings.

1.4 SUBMITTALS

A. Product Data: Include construction details, material descriptions, core descriptions, label compliance, fire-resistance and temperature-rise ratings, and finishes for each type of steel door and frame specified.

B. Shop Drawings: In addition to requirements below, provide a schedule of standard steel doors and frames using same reference numbers for details and openings as those on Drawings:

1. Elevations of each door design.
2. Details of doors, including vertical and horizontal edge details.
3. Frame details for each frame type, including dimensioned profiles.
4. Details and locations of reinforcement and preparations for hardware.
5. Details of each different wall opening condition.
6. Details of anchorages, accessories, joints, and connections.
7. Details of glazing frames and stops showing glazing.

C. Product Test Reports: Based on evaluation of comprehensive fire tests performed by a qualified testing agency, for each type of standard steel door and frame.

1.5 QUALITY ASSURANCE

A. Installer Qualifications: An employer of workers trained and approved by manufacturer.

B. Testing Agency Qualifications: An independent agency qualified according to ASTM E 329 for testing indicated, as documented according to ASTM E 548.

C. Source Limitations: Obtain standard steel doors and frames through one source from a single manufacturer.

D. Fire-Rated Door Sidelight and Transom Frame Assemblies: Assemblies complying with NFPA 80 that are listed and labeled by a testing and inspecting agency acceptable to authorities having jurisdiction, for fire-protection ratings indicated.

1. Test Pressure: Test according to NFPA 252 or UL 10C. After 5 minutes into the test, the neutral pressure level in furnace shall be established at 40 inches or less above the sill.
2. Temperature-Rise Rating: At exit enclosures, provide doors that have a temperature-rise rating of 450 deg F maximum in 30 minutes of fire exposure.

E. Fire-Rated, Borrowed-Light Frame Assemblies: Assemblies complying with NFPA 80 that are listed and labeled, by a testing and inspecting agency acceptable to authorities having jurisdiction, for fire-protection ratings indicated, based on testing according to NFPA 257 or UL 9. Label each individual glazed lite.

F. Smoke-Control Door Assemblies: Comply with NFPA 105.

1.6 DELIVERY, STORAGE, AND HANDLING

A. Deliver doors and frames palletized, wrapped, or crated to provide protection during transit and Project-site storage. Do not use nonvented plastic.

B. Deliver welded frames with two removable spreader bars across bottom of frames, tack welded to jambs and mullions.

C. Store doors and frames under cover at Project site. Place units in a vertical position with heads up, spaced by blocking, on minimum 4-inch- high wood blocking. Avoid using nonvented plastic or canvas shelters that could create a humidity chamber.

1. If wrappers on doors become wet, remove cartons immediately. Provide minimum 1/4-inch space between each stacked door to permit air circulation.

1.7 PROJECT CONDITIONS

A. Field Measurements: Verify openings by field measurements before fabrication and indicate measurements on Shop Drawings.

1. Established Dimensions: Where field measurements cannot be made without delaying the Work, establish opening dimensions and proceed with fabricating standard steel frames

without field measurements. Coordinate wall construction to ensure that actual opening dimensions correspond to established dimensions.

1.8 COORDINATION

A. Coordinate installation of anchorages for standard steel frames. Furnish setting drawings, templates, and directions for installing anchorages, including sleeves, concrete inserts, anchor bolts, and items with integral anchors, that are to be embedded in masonry. Deliver such items to Project site in time for installation.

PART 2 - PRODUCTS

2.1 MANUFACTURERS

A. Available Manufacturers: Subject to compliance with requirements, manufacturers offering products that may be incorporated into the Work include, but are not limited to, the following:

1. Ceco Door Products; an ASSA ABLOY Group Company.
2. Pioneer Industries, Inc.
3. Republic Builders Products Company.
4. Steelcraft; an Ingersoll-Rand Company.

2.2 MATERIALS

A. Cold-Rolled Steel Sheet: ASTM A 1008/A 1008M, Commercial Steel (CS), Type B; suitable for exposed applications.

B. Hot-Rolled Steel Sheet: ASTM A 1011/A 1011M, Commercial Steel (CS), Type B; free of scale, pitting, or surface defects; pickled and oiled.

C. Metallic-Coated Steel Sheet: ASTM A 653/A 653M, Commercial Steel (CS), Type B; with minimum A40 zinc-iron-alloy (galvannealed) coating designation.

D. Electrolytic Zinc-Coated Steel Sheet: ASTM A 591/A 591M, Commercial Steel (CS), Class B coating; mill phosphatized.

E. Supports and Anchors: After fabricating, galvanize units to be built into exterior walls according to ASTM A 153/A 153M, Class B.

F. Inserts, Bolts, and Fasteners: Provide items to be built into exterior walls, hot-dip galvanized according to ASTM A 153/A 153M.

G. Grout: Comply with ASTM C 476, with a slump of 4 inches for standard steel door frames built into concrete or masonry, as measured according to ASTM C 143/C 143M.

H. Mineral-Fiber Insulation: ASTM C 665, Type I (blankets without membrane facing); consisting of fibers manufactured from slag or rock wool with 6- to 12-lb/cu. ft. density; with maximum flame-spread and smoke-developed indexes of 25 and 50 respectively; passing ASTM E 136 for combustion characteristics.

I. Glazing: Comply with requirements in Division 8 Section "Glazing."

J. Bituminous Coating: Cold-applied asphalt mastic, SSPC-Paint 12, compounded for 15-mil dry film thickness per coat. Provide inert-type noncorrosive compound free of asbestos fibers, sulfur components, and other deleterious impurities.

2.3 STANDARD STEEL DOORS

A. General: Provide doors of design indicated, not less than thickness indicated; fabricated with smooth surfaces, without visible joints or seams on exposed faces, unless otherwise indicated. Comply with ANSI A250.8.

1. Design: Flush panel.
2. Core Construction: Manufacturer's standard kraft-paper honeycomb, polystyrene, polyurethane, mineral-board, or vertical steel-stiffener core that produces doors complying with ANSI A250.8.

    a. Fire Door Core: As required to provide fire-protection and temperature-rise ratings indicated.

3. Vertical Edges for Single-Acting Doors: Square edge.
4. Top and Bottom Edges: Closed with flush or inverted 0.042-inch- thick end closures or channels of same material as face sheets.
5. Tolerances: Comply with SDI 117, "Manufacturing Tolerances for Standard Steel Doors and Frames."

B. Interior Doors: Face sheets fabricated from cold-rolled steel sheet, unless otherwise indicated to comply with exterior door requirements. Provide doors complying with requirements indicated below by referencing ANSI A250.8 for level and model and ANSI A250.4 for physical-endurance level:

1. Level 3 and Physical Performance Level A (Extra Heavy Duty), Model 1 (Full Flush).

C. Hardware Reinforcement: Fabricate reinforcement plates from same material as door face sheets to comply with the following minimum sizes:

1. Hinges: Minimum 0.123 inch thick by 1-1/2 inches wide by 6 inches longer than hinge, secured by not less than 6 spot welds.
2. Pivots: Minimum 0.167 inch thick by 1-1/2 inches wide by 6 inches longer than hinge, secured by not less than 6 spot welds.
3. Lock Face, Flush Bolts, Closers, and Concealed Holders: Minimum 0.067 inch thick.
4. All Other Surface-Mounted Hardware: Minimum 0.067 inch thick.

D. Fabricate concealed stiffeners and hardware reinforcement from either cold- or hot-rolled steel sheet.

2.4 STANDARD STEEL FRAMES

A. General: Comply with ANSI A250.8 and with details indicated for type and profile.

B. Interior Frames: Fabricated from cold-rolled steel sheet, unless otherwise indicated to comply with exterior frame requirements.

1. Fabricate frames with mitered or coped and welded face corners and seamless face joints , unless otherwise indicated.
2. Fabricate knocked-down frames with mitered or coped corners, for field assembly where indicated.
3. Frames for Level 3 Steel Doors: 0.067-inch- thick steel sheet, unless otherwise indicated.
4. Frames for Wood Doors: 0.067-inch- thick steel sheet, unless otherwise indicated.
5. Frames for Borrowed Lights: 0.053-inch- thick steel sheet, unless otherwise indicated.

C. Hardware Reinforcement: Fabricate reinforcement plates from same material as frames to comply with the following minimum sizes:

1. Hinges: Minimum 0.123 inch thick by 1-1/2 inches wide by 6 inches longer than hinge, secured by not less than 6 spot welds.
2. Pivots: Minimum 0.167 inch thick by 1-1/2 inches wide by 6 inches longer than hinge, secured by not less than 6 spot welds.
3. Lock Face, Flush Bolts, Closers, and Concealed Holders: Minimum 0.067 inch thick.
4. All Other Surface-Mounted Hardware: Minimum 0.067 inch thick.

D. Supports and Anchors: Fabricated from electrolytic zinc-coated or metallic-coated steel sheet.

E. Jamb Anchors:

1. Masonry Type: Adjustable strap-and-stirrup or T-shaped anchors to suit frame size, not less than 0.042 inch thick, with corrugated or perforated straps not less than 2 inches wide by 10 inches long; or wire anchors not less than 0.177 inch thick.
2. Stud-Wall Type: Designed to engage stud, welded to back of frames; not less than 0.042 inch thick.

F. Floor Anchors: Formed from same material as frames, not less than 0.042 inch thick, and as follows:

1. Monolithic Concrete Slabs: Clip-type anchors, with two holes to receive fasteners.

G. Fabricate concealed stiffeners and hardware reinforcement from either cold- or hot-rolled steel sheet.

H. Ceiling Struts: Minimum 3/8-inch-thick by 2-inch- wide steel.

2.5 STOPS AND MOLDINGS

A. Moldings for Glazed Lites in Doors: Minimum 0.032 inch thick, fabricated from same material as door face sheet in which they are installed.

B. Fixed Frame Moldings: Formed integral with standard steel frames, minimum 5/8 inch high, unless otherwise indicated.

C. Loose Stops for Glazed Lites in Frames: Minimum 0.032 inch thick, fabricated from same material as frames in which they are installed.

2.6 FABRICATION

A. General: Fabricate standard steel doors and frames to be rigid and free of defects, warp, or buckle. Accurately form metal to required sizes and profiles, with minimum radius for thickness of metal. Where practical, fit and assemble units in manufacturer's plant. To ensure proper assembly at Project site, clearly identify work that cannot be permanently factory assembled before shipment.

B. Standard Steel Doors:

1. Exterior Doors: Provide weep-hole openings in bottom of exterior doors to permit moisture to escape. Seal joints in top edges of doors against water penetration.
2. Glazed Lites: Factory cut openings in doors.

C. Standard Steel Frames: Where frames are fabricated in sections due to shipping or handling limitations, provide alignment plates or angles at each joint, fabricated of same thickness metal as frames.

1. Welded Frames: Weld flush face joints continuously; grind, fill, dress, and make smooth, flush, and invisible.
2. Sidelight and Transom Bar Frames: Provide closed tubular members with no visible face seams or joints; fabricated from same material as door frame. Fasten members at crossings and to jambs by butt welding.
3. Provide countersunk, flat- or oval-head exposed screws and bolts for exposed fasteners, unless otherwise indicated.
4. Floor Anchors: Weld anchors to bottom of jambs and mullions with at least four spot welds per anchor.
5. Jamb Anchors: Provide number and spacing of anchors as follows:

    a. Masonry Type: Locate anchors not more than 18 inches from top and bottom of frame. Space anchors not more than 32 inches o.c. and as follows:

        1) Two anchors per jamb up to 60 inches in height.
        2) Three anchors per jamb from 60 to 90 inches in height.
        3) Four anchors per jamb from 90 to 120 inches in height.
        4) Four anchors per jamb plus 1 additional anchor per jamb for each 24 inches or fraction thereof more than 120 inches in height.

    b. Stud-Wall Type: Locate anchors not more than 18 inches from top and bottom of frame. Space anchors not more than 32 inches o.c. and as follows:

        1) Three anchors per jamb up to 60 inches in height.
        2) Four anchors per jamb from 60 to 90 inches in height.
        3) Five anchors per jamb from 90 to 96 inches in height.
        4) Five anchors per jamb plus 1 additional anchor per jamb for each 24 inches or fraction thereof more than 96 inches in height.
        5) Two anchors per head for frames more than 42 inches wide and mounted in metal-stud partitions.

6. Door Silencers: Except on weather-stripped doors, drill stops to receive door silencers as follows. Provide plastic plugs to keep holes clear during construction.

    a. Single-Door Frames: Drill stop in strike jamb to receive three door silencers.

b. Double-Door Frames: Drill stop in head jamb to receive two door silencers.

D. Hardware Preparation: Factory prepare standard steel doors and frames to receive templated mortised hardware; include cutouts, reinforcement, mortising, drilling, and tapping, according to the Door Hardware Schedule and templates furnished as specified in Division 8 Section "Door Hardware."

1. Reinforce doors and frames to receive nontemplated mortised and surface-mounted door hardware.
2. Comply with applicable requirements in ANSI A250.6 and ANSI/DHI A115 Series specifications for door and frame preparation for hardware. Locate hardware as indicated on Shop Drawings or, if not indicated, according to ANSI A250.8.

E. Stops and Moldings: Provide stops and moldings around glazed lites where indicated. Form corners of stops and moldings with butted or mitered hairline joints.

1. Single Glazed Lites: Provide fixed stops and moldings welded on secure side of door or frame.
2. Multiple Glazed Lites: Provide fixed and removable stops and moldings such that each glazed lite is capable of being removed independently.
3. Provide fixed frame moldings on outside of exterior and on secure side of interior doors and frames.
4. Provide loose stops and moldings on inside of doors and frames.
5. Coordinate rabbet width between fixed and removable stops with type of glazing and type of installation indicated.

2.7 STEEL FINISHES

A. General: Comply with NAAMM's "Metal Finishes Manual for Architectural and Metal Products" for recommendations for applying and designating finishes.

1. Finish standard steel door and frames after assembly.

B. Metallic-Coated Steel Surface Preparation: Clean surfaces with nonpetroleum solvent so surfaces are free of oil and other contaminants. After cleaning, apply a conversion coating suited to the organic coating to be applied over it. Clean welds, mechanical connections, and abraded areas, and apply galvanizing repair paint specified below to comply with ASTM A 780.

1. Galvanizing Repair Paint: High-zinc-dust-content paint for regalvanizing welds in steel, complying with SSPC-Paint 20.

C. Steel Surface Preparation: Clean surfaces to comply with SSPC-SP 1, "Solvent Cleaning"; remove dirt, oil, grease, or other contaminants that could impair paint bond. Remove mill scale and rust, if present, from uncoated steel; comply with SSPC-SP 3, "Power Tool Cleaning," or SSPC-SP 6/NACE No. 3, "Commercial Blast Cleaning."

D. Factory Priming for Field-Painted Finish: Apply shop primer specified below immediately after surface preparation and pretreatment. Apply a smooth coat of even consistency to provide a uniform dry film thickness of not less than 0.7 mils.

1. Shop Primer: Manufacturer's standard, fast-curing, lead- and chromate-free primer complying with ANSI A250.10 acceptance criteria; recommended by primer manufacturer

for substrate; compatible with substrate and field-applied finish paint system indicated; and providing a sound foundation for field-applied topcoats despite prolonged exposure.

PART 3 - EXECUTION

3.1 EXAMINATION

A. Examine substrates, areas, and conditions, with Installer present, for compliance with requirements for installation tolerances and other conditions affecting performance of standard steel doors and frames.

1. Examine roughing-in for embedded and built-in anchors to verify actual locations of standard steel frame connections before frame installation.
2. For the record, prepare written report, endorsed by Installer, listing conditions detrimental to performance of work.
3. Proceed with installation only after unsatisfactory conditions have been corrected.

3.2 PREPARATION

A. Remove welded-in shipping spreaders installed at factory.

B. Prior to installation and with installation spreaders in place, adjust and securely brace standard steel door frames for squareness, alignment, twist, and plumb to the following tolerances:

1. Squareness: Plus or minus 1/16 inch, measured at door rabbet on a line 90 degrees from jamb perpendicular to frame head.
2. Alignment: Plus or minus 1/16 inch, measured at jambs on a horizontal line parallel to plane of wall.
3. Twist: Plus or minus 1/16 inch, measured at opposite face corners of jambs on parallel lines, and perpendicular to plane of wall.
4. Plumbness: Plus or minus 1/16 inch, measured at jambs on a perpendicular line from head to floor.

C. Drill and tap doors and frames to receive nontemplated mortised and surface-mounted door hardware.

3.3 INSTALLATION

A. General: Provide doors and frames of sizes, thicknesses, and designs indicated. Install standard steel doors and frames plumb, rigid, properly aligned, and securely fastened in place; comply with Drawings and manufacturer's written instructions.

B. Standard Steel Frames: Install standard steel frames for doors, sidelights, transoms, borrowed lights and other openings, of size and profile indicated. Comply with SDI 105.

1. Set frames accurately in position; plumbed, aligned, and braced securely until permanent anchors are set. After wall construction is complete, remove temporary braces, leaving surfaces smooth and undamaged.

a. At fire-protection-rated openings, install frames according to NFPA 80.

b. Install frames with removable glazing stops located on secure side of opening.
c. Install door silencers in frames before grouting.
d. Remove temporary braces necessary for installation only after frames have been properly set and secured.
e. Check plumb, squareness, and twist of frames as walls are constructed. Shim as necessary to comply with installation tolerances.
f. Apply bituminous coating to backs of frames that are filled with mortar, grout, and plaster containing antifreezing agents.

2. Floor Anchors: Provide floor anchors for each jamb and mullion that extends to floor and secure with postinstalled expansion anchors.
3. Metal-Stud Partitions: Solidly pack mineral-fiber insulation behind frames.
4. Masonry Walls: Coordinate installation of frames to allow for solidly filling space between frames and masonry with mortar as specified in Division 4 Section "Unit Masonry Assemblies."
5. Ceiling Struts: Extend struts vertically from top of frame at each jamb to supporting construction above, unless frame is anchored to masonry or to other structural support at each jamb. Bend top of struts to provide flush contact for securing to supporting construction above. Provide adjustable wedged or bolted anchorage to frame jamb members.
6. Installation Tolerances: Adjust standard steel door frames for squareness, alignment, twist, and plumb to the following tolerances:

    a. Squareness: Plus or minus 1/16 inch, measured at door rabbet on a line 90 degrees from jamb perpendicular to frame head.
    b. Alignment: Plus or minus 1/16 inch, measured at jambs on a horizontal line parallel to plane of wall.
    c. Twist: Plus or minus 1/16 inch, measured at opposite face corners of jambs on parallel lines, and perpendicular to plane of wall.
    d. Plumbness: Plus or minus 1/16 inch, measured at jambs at floor.

C. Standard Steel Doors: Fit hollow-metal doors accurately in frames, within clearances specified below. Shim as necessary.

1. Non-Fire-Rated Standard Steel Doors:

    a. Jambs and Head: 1/8 inch plus or minus 1/16 inch.
    b. Between Edges of Pairs of Doors: 1/8 inch plus or minus 1/16 inch.
    c. Between Bottom of Door and Top of Threshold: Maximum 3/8 inch.
    d. Between Bottom of Door and Top of Finish Floor (No Threshold): Maximum 3/4 inch.

2. Fire-Rated Doors: Install doors with clearances according to NFPA 80.
3. Smoke-Control Doors: Install doors according to NFPA 105.

D. Glazing: Comply with installation requirements in Division 8 Section "Glazing" and with standard steel door and frame manufacturer's written instructions.

1. Secure stops with countersunk flat- or oval-head machine screws spaced uniformly not more than 9 inches o.c., and not more than 2 inches o.c. from each corner.

3.4 ADJUSTING AND CLEANING

A. Final Adjustments: Check and readjust operating hardware items immediately before final inspection. Leave work in complete and proper operating condition. Remove and replace defective work, including standard steel doors or frames that are warped, bowed, or otherwise unacceptable.

B. Clean grout and other bonding material off standard steel doors and frames immediately after installation.

C. Prime-Coat Touchup: Immediately after erection, sand smooth rusted or damaged areas of prime coat and apply touchup of compatible air-drying primer.

D. Galvannealed Surfaces: Clean abraded areas and repair with galvanizing repair paint according to manufacturer's written instructions.

END OF SECTION 08111

SECTION 08211
FLUSH WOOD DOORS

PART 1 - GENERAL

1.1 RELATED DOCUMENTS

A. Drawings and general provisions of the Contract, including General and Supplementary Conditions and Division 1 Specification Sections, apply to this Section.

1.2 SUMMARY

A. This Section includes the following:

1. Solid-core doors with wood-veneer and plastic laminate faces.
2. Factory finishing flush wood doors.
3. Factory fitting flush wood doors to frames and factory machining for hardware.

B. Related Sections include the following:

1. Division 8 Section "Glazing" for glass view panels in flush wood doors.

1.3 SUBMITTALS

A. Product Data: For each type of door. Include details of core and edge constructionand trim for openings. Include factory-finishing specifications.

B. Shop Drawings: Indicate location, size, and hand of each door; elevation of each kind of door; construction details not covered in Product Data; location and extent of hardware blocking; and other pertinent data.

1. Indicate dimensions and locations of mortises and holes for hardware.
2. Indicate dimensions and locations of cutouts.
3. Indicate requirements for veneer matching.
4. Indicate doors to be factory finished and finish requirements.
5. Indicate fire ratings for fire doors.

C. Samples for Initial Selection: Color charts consisting of actual materials in small sections for the following:

1. Faces of Factory-Finished Doors: Show the full range of colors available for stained finishes.

D. Samples for Verification:

1. 6" plastic laminate samples

1.4 QUALITY ASSURANCE

A. Source Limitations: Obtain flush wood doors through one source from a single manufacturer.

B. Quality Standard: Comply with

1. Provide AWI Quality Certification Labels or an AWI letter of licensing for Project indicating that doors comply with requirements of grades specified.

C. Fire-Rated Wood Doors: Doors complying with NFPA 80 that are listed and labeled by a testing and inspecting agency acceptable to authorities having jurisdiction, for fire ratings indicated, based on testing according to NFPA 252.

1. Test Pressure: After 5 minutes into the test, the neutral pressure level in furnace shall be established at 40 inches or less above the sill.
2. Oversize, Fire-Rated Wood Doors: For door assemblies exceeding sizes of tested assemblies, provide oversize fire door label or certificate of inspection, from a testing and inspecting agency acceptable to authorities having jurisdiction, stating that doors comply with requirements of design, materials, and construction.
3. Temperature-Rise Rating: At exit enclosures, provide doors that have a temperature-rise rating of 450 deg F maximum in 30 minutes of fire exposure.

1.5 DELIVERY, STORAGE, AND HANDLING

A. Comply with requirements of referenced standard and manufacturer's written instructions.

B. Package doors individually in cardboard cartons.

C. Mark each door on top and bottom rail with opening number used on Shop Drawings.

1.6 PROJECT CONDITIONS

A. Environmental Limitations: Do not deliver or install doors until building is enclosed, wet work is complete, and HVAC system is operating and will maintain temperature and relative humidity at occupancy levels during the remainder of the construction period.

1.7 WARRANTY

A. Special Warranty: Manufacturer's standard form, signed by manufacturer, Installer, and Contractor, in which manufacturer agrees to repair or replace doors that are defective in materials or workmanship, have warped (bow, cup, or twist) more than 1/4 inch in a 42-by-84-inch section, or show telegraphing of core construction in face veneers exceeding 0.01 inch in a 3-inch span.

1. Warranty shall also include installation and finishing that may be required due to repair or replacement of defective doors.

2. Warranty shall be in effect during the following period of time from date of Substantial Completion:

a. Solid-Core Interior Doors: Life of installation.

PART 2 - PRODUCTS

2.1 MANUFACTURERS

A. Manufacturers: Subject to compliance with requirements, provide products by one of the following:

1. Flush Wood Doors:

a. Algoma Hardwoods Inc.
b. Eagle Plywood & Door Manufacturing, Inc.
c. Eggers Industries; Architectural Door Division.
d. GRAHAM Manufacturing Corp.
e. Mohawk Flush Doors, Inc.
f. Oshkosh Architectural Door Co.
g. Weyerhaeuser Company.

2.2 DOOR CONSTRUCTION, GENERAL

A. Adhesives: Do not use adhesives containing urea formaldehyde.

B. Doors for Transparent Finish:

1. Grade: Custom with Grade A faces.
2. Species and Cut: Red oak, plain sliced.
3. Match between Veneer Leaves: Book match.
4. Assembly of Veneer Leaves on Door Faces: Balance match.
5. Pair and Set Match: Provide for doors hung in same opening or separated only by mullions.
6. Stiles: Same species as faces.

2.3 SOLID-CORE DOORS

A. Particleboard Cores: Comply with the following requirements:

1. Particleboard: ANSI A208.1, Grade LD-2.

a. Use particleboard made with binder containing no urea-formaldehyde resin.

2. Blocking: Provide wood blocking in particleboard-core doors as needed to eliminate through-bolting hardware.

3. Provide doors with either glued-block or structural composite lumber cores instead of particleboard cores at locations where exit devices are indicated.

B. Interior Veneer-Faced Doors:

1. Core: Particleboard.
2. Construction: Five or seven plies with stiles and rails bonded to core, then entire unit abrasive planed before veneering.
3. Construction: Seven plies, either bonded or nonbonded construction.

C. Fire-Protection-Rated Doors: Provide core specified or mineral core as needed to provide fire-protection rating indicated.

1. Edge Construction: Provide edge construction with intumescent seals concealed by outer stile. Comply with specified requirements for exposed edges.
2. Pairs: Provide fire-retardant stiles that are listed and labeled for applications indicated without formed-steel edges and astragals. Provide stiles with concealed intumescent seals. Comply with specified requirements for exposed edges.

D. Mineral-Core Doors:

1. Construction: Construction and core specified above for type of face indicated or manufacturer's standard mineral-core construction as needed to provide fire rating indicated.
2. Blocking: For mineral-core doors, provide composite blocking with improved screw-holding capability approved for use in doors of fire ratings indicated as follows:

   a. 5-inch top-rail blocking.
   b. 5-inch bottom-rail blocking, in doors indicated to have protection plates.
   c. 4-1/2-by-10-inch lock blocks, in doors indicated to have exit devices.

3. Edge Construction: At hinge stiles, provide manufacturer's standard laminated-edge construction with improved screw-holding capability and split resistance and with outer stile matching face veneer.

2.4 LOUVERS AND LIGHT FRAMES

A. Wood Beads for Light Openings in Wood Doors:

1. Wood Species: Same species as door faces.
2. Profile: Manufacturer's standard shape.
3. At 20-minute, fire-rated, wood-core doors, provide wood beads and metal glazing clips approved for such use.

B. Wood-Veneered Beads for Light Openings in Fire-Rated Doors: Manufacturer's standard wood-veneered noncombustible beads matching veneer species of door faces and approved for use in doors of fire-protection rating indicated. Include concealed metal glazing clips where required for opening size and fire protection rating indicated.

C. Metal Frames for Light Openings in Fire Rated Plastic Laminated Doors: Manufacturer's standard frame formed of 0.048 inch thick, cold rolled steel sheet; with baked-enamel or powder-coated finish; and approved for use in doors of fire protection rating indicated.

2.5 FABRICATION

A. Factory fit doors to suit frame-opening sizes indicated, with the following uniform clearances and bevels, unless otherwise indicated:

1. Comply with clearance requirements of referenced quality standard for fitting. Comply with requirements in NFPA 80 for fire-rated doors.

B. Factory machine doors for hardware that is not surface applied. Locate hardware to comply with DHI-WDHS-3. Comply with final hardware schedules, door frame Shop Drawings, DHI A115-W series standards, and hardware templates.

1. Coordinate measurements of hardware mortises in metal frames to verify dimensions and alignment before factory machining.

C. Openings: Cut and trim openings through doors to comply with applicable requirements of referenced standards for kind(s) of door(s) required.

1. Light Openings: Trim openings with moldings of material and profile indicated.

2.6 FACTORY FINISHING

A. General: Comply with AWI's "Architectural Woodwork Quality Standards Illustrated" for factory finishing.

B. Finish doors at factory.

C. Finish doors at factory that are indicated to receive transparent finish. Field finish doors indicated to receive opaque finish.

D. Finish doors at factory where indicated in schedules or on Drawings as factory finished.

E. Transparent Finish:

1. Grade: Custom.
2. Finish: AWI System TR-6 catalyzed polyurethane.
3. Staining: As selected by Architect from manufacturer's full range.
4. Effect: Filled.
5. Sheen: Satin.

F. Plastic Laminate Finishes:

1. Face: High pressure decorative laminate complying with NEMA LD 3, Grade HGS.
2. Color Pattern and Finish: Match existing adjacent smooth dark brown.
3. Exposed Edge Finish: All edges to be plastic laminate to match faces and applied before faces.

PART 3 - EXECUTION

3.1 EXAMINATION

A. Examine doors and installed door frames before hanging doors.

1. Verify that frames comply with indicated requirements for type, size, location, and swing characteristics and have been installed with level heads and plumb jambs.
2. Reject doors with defects.

B. Proceed with installation only after unsatisfactory conditions have been corrected.

3.2 INSTALLATION

A. Hardware: For installation, see Division 8 Section "Door Hardware."

B. Manufacturer's Written Instructions: Install doors to comply with manufacturer's written instructions, referenced quality standard, and as indicated.

1. Install fire-rated doors in corresponding fire-rated frames according to NFPA 80.

C. Factory-Fitted Doors: Align in frames for uniform clearance at each edge.

D. Factory-Finished Doors: Restore finish before installation if fitting or machining is required at Project site.

3.3 ADJUSTING

A. Operation: Rehang or replace doors that do not swing or operate freely.

B. Finished Doors: Replace doors that are damaged or do not comply with requirements. Doors may be repaired or refinished if work complies with requirements and shows no evidence of repair or refinishing.

END OF SECTION 08211

SECTION 08311
ACCESS DOORS AND FRAMES

PART 1 - GENERAL

1.1 RELATED DOCUMENTS

A. Drawings and general provisions of the Contract, including General and Supplementary Conditions and Division 1 Specification Sections, apply to this Section.

1.2 SUMMARY

A. This Section includes the following:

1. Access doors and frames for walls and ceilings.

B. Related Sections include the following:

1. Division 4 Section "Unit Masonry Assemblies" for anchoring and grouting access door frames set in masonry construction.
2. Division 7 Section "Roof Accessories" for roof hatches.
3. Division 9 Section "Acoustical Tile Ceilings" for suspended acoustical tile ceilings.
4. Division 15 Section "Duct Accessories" for heating and air-conditioning duct access doors.

1.3 SUBMITTALS

A. Product Data: For each type of access door and frame indicated. Include construction details, fire ratings, materials, individual components and profiles, and finishes.

B. Shop Drawings: Show fabrication and installation details of access doors and frames for each type of substrate. Include plans, elevations, sections, details, and attachments to other work.

1.4 QUALITY ASSURANCE

A. Source Limitations: Obtain each type of access door(s) and frame(s) through one source from a single manufacturer.

B. Fire-Rated Access Doors and Frames: Units complying with NFPA 80 that are identical to access door and frame assemblies tested for fire-test-response characteristics per the following test method and that are listed and labeled by UL or another testing and inspecting agency acceptable to authorities having jurisdiction:

1. NFPA 252 or UL 10B for vertical access doors and frames.
2. ASTM E 119 or UL 263 for horizontal access doors and frames.

C. Size Variations: Obtain Architect's acceptance of manufacturer's standard-size units, which may vary slightly from sizes indicated.

1.5 COORDINATION

A. Verification: Determine specific locations and sizes for access doors needed to gain access to concealed plumbing, mechanical, or other concealed work, and indicate in the schedule specified in "Submittals" Article.

PART 2 - PRODUCTS

2.1 STEEL MATERIALS

A. Metallic-Coated Steel Sheet: ASTM A 653/A 653M, Commercial Steel (CS) with A60 zinc-iron-alloy (galvannealed) coating or G60 mill-phosphatized zinc coating; stretcher-leveled standard of flatness; with minimum thickness indicated representing specified thickness according to ASTM A 924/A 924M.

B. Steel Finishes: Comply with NAAMM's "Metal Finishes Manual for Architectural and Metal Products" for recommendations for applying and designating finishes.

1. Surface Preparation for Metallic-Coated Steel Sheet: Clean surfaces with nonpetroleum solvent so surfaces are free of oil and other contaminants. After cleaning, apply a conversion coating suited to the organic coating to be applied over it. Clean welds, mechanical connections, and abraded areas, and apply galvanizing repair paint specified below to comply with ASTM A 780.

a. Galvanizing Repair Paint: High-zinc-dust-content paint for regalvanizing welds in steel, complying with SSPC-Paint 20.

2. Factory-Primed Finish: Apply shop primer immediately after cleaning and pretreating.

C. Drywall Beads: Edge trim formed from 0.0299-inch zinc-coated steel sheet formed to receive joint compound and in size to suit thickness of gypsum board.

2.2 ACCESS DOORS AND FRAMES FOR WALLS AND CEILINGS

A. Available Manufacturers: Subject to compliance with requirements, manufacturers offering products that may be incorporated into the Work include, but are not limited to, the following:

1. Acudor Products, Inc.
2. Babcock-Davis; A Cierra Products Co.
3. Jensen Industries.
4. J. L. Industries, Inc.
5. Larsen's Manufacturing Company.

6. Milcor Inc.

B. Flush Access Doors and Frames with Exposed Trim: Fabricated from metallic-coated steel sheet.

1. Locations: Existing wall and ceiling surfaces.
2. Door: Minimum 0.060-inch- thick sheet metal, set flush with exposed face flange of frame.
3. Frame: Minimum 0.060-inch- thick sheet metal with 1-1/4-inch- wide, surface-mounted trim.
4. Hinges: Continuous piano.
5. Latch: Slam latch operated by pinned hex head wrench with interior release.

C. Flush Access Doors and Trimless Frames: Fabricated from metallic-coated steel sheet.

1. Locations: New drywall, wall and ceiling surfaces.
2. Door: Minimum 0.060-inch- thick sheet metal, set flush with surrounding finish surfaces.
3. Frame: Minimum 0.060-inch- thick sheet metal with drywall bead flange.
4. Hinges: Continuous piano.
5. Latch: Slam latch operated by pinned hex head wrench with interior release.

D. Recessed Access Doors and Trimless Frames: Fabricated from metallic-coated steel sheet.

1. Locations: Ceiling surfaces.
2. Door: Minimum 0.060-inch-thick sheet metal in the form of a pan recessed for acoustical tile infill.
3. Frame: Minimum 0.060-inch-thick sheet metal with drywall bead for gypsum board surfaces designed for insertion into acoustical tile ceiling.
4. Hinges: Concealed pivoting rod hinge.
5. Latch: Slam latch operated by pinned hex head wrench with interior release.

E. Fire-Rated, Insulated, Flush Access Doors and Frames with Exposed Trim: Fabricated from metallic-coated steel sheet.

1. Locations: Existing wall and ceiling, and new masonry walls surfaces.
2. Fire-Resistance Rating: Not less than that of adjacent construction.
3. Temperature Rise Rating: 250 deg F at the end of 30 minutes.
4. Door: Flush panel with a core of mineral-fiber insulation enclosed in sheet metal with a minimum thickness of 0.036 inch.
5. Frame: Minimum 0.060-inch-thick sheet metal with 1-inch-wide, surface-mounted trim.
6. Hinges: Continuous piano.
7. Automatic Closer: Spring type.
8. Latch: Self-latching device operated by flush key with interior release.

F. Fire-Rated, Insulated, Flush Access Doors and Trimless Frames: Fabricated from metallic-coated steel sheet.

1. Locations: New drywall ceiling surfaces.
2. Fire-Resistance Rating: Not less than 1 hour.
3. Temperature Rise Rating: 250 deg F at the end of 30 minutes.

4. Door: Flush panel with a core of mineral-fiber insulation enclosed in sheet metal with a minimum thickness of 0.036 inch.
5. Frame: Minimum 0.060-inch- thick sheet metal with drywall bead.
6. Hinges: Continuous piano.
7. Automatic Closer: Spring type.
8. Latch: Self-latching device operated by flush key with interior release.

G. Fire Rated, Uninsulated, Flush Access Doors and Frames with Exposed Trim: Fabricated from metallic-coated steel sheet.

1. Locations: Wall surfaces.
2. Fire-Resistance Rating: Not less than that of adjacent construction.
3. Door: Minimum 0.060-inch-thick sheet metal, flush construction.
4. Frame: Minimum 0.060-inch- thick sheet metal with 1-1/4-inch- wide, surface-mounted trim.
5. Hinges: Continuous piano.
6. Automatic Closer: Spring type.
7. Latch: Self-latching device operated by flush key with interior release.

2.3 FABRICATION

A. General: Provide access door and frame assemblies manufactured as integral units ready for installation.

B. Metal Surfaces: For metal surfaces exposed to view in the completed Work, provide materials with smooth, flat surfaces without blemishes. Do not use materials with exposed pitting, seam marks, roller marks, rolled trade names, or roughness.

C. Doors and Frames: Grind exposed welds smooth and flush with adjacent surfaces. Furnish attachment devices and fasteners of type required to secure access panels to types of supports indicated.

1. Exposed Flanges: As indicated
2. For trimless frames with drywall bead, provide edge trim for gypsum board securely attached to perimeter of frames.
3. Provide mounting holes in frames for attachment of units to metal or wood framing.
4. Provide mounting holes in frame for attachment of masonry anchors. Furnish adjustable metal masonry anchors.

D. Recessed Access Doors: Form face of panel to provide recess for application of applied finish. Reinforce panel as required to prevent buckling.

1. For recessed doors with plaster infill, provide self-furring expanded metal lath attached to door panel.

E. Latching Mechanisms: Furnish number required to hold doors in flush, smooth plane when closed.

PART 3 - EXECUTION

3.1 INSTALLATION

A. Comply with manufacturer's written instructions for installing access doors and frames.

B. Set frames accurately in position and attach securely to supports with plane of face panels aligned with adjacent finish surfaces.

C. Install doors flush with adjacent finish surfaces or recessed to receive finish material.

3.2 ADJUSTING AND CLEANING

A. Adjust doors and hardware after installation for proper operation.

B. Remove and replace doors and frames that are warped, bowed, or otherwise damaged.

END OF SECTION 08311

SECTION 08411
ALUMINUM-FRAMED ENTRANCES AND STOREFRONTS

PART 1 - GENERAL

1.1 RELATED DOCUMENTS

A. Drawings and general provisions of the Contract, including General and Supplementary Conditions and Division 1 Specification Sections, apply to this Section.

1.2 SUMMARY

A. This Section includes the following:

1. Exterior aluminum-framed storefronts.
    a. Glazing is retained mechanically with gaskets on four sides.
2. Exterior manual-swing aluminum doors.
3. Exterior manual-swing aluminum flush doors.
4. Exterior manual-swing fiberglass reinforced polyester (FRP) flush doors.
5. Exterior aluminum doorframes.

B. Related Sections include the following:

1. Division 7 Section "Joint Sealants" for installation of joint sealants installed with aluminum-framed systems and for sealants to the extent not specified in this Section.
2. Division 8 Section "Door Hardware" for hardware to the extent not specified in this Section.
3. Division 8 Section "Glazing" for glazing requirements to the extent not specified in this Section.

1.3 PERFORMANCE REQUIREMENTS

A. General: Provide aluminum-framed systems, including anchorage, capable of withstanding, without failure, the effects of the following:

1. Structural loads.
2. Thermal movements.
3. Dimensional tolerances of building frame and other adjacent construction.
4. Failure includes the following:
    a. Deflection exceeding specified limits.
    b. Thermal stresses transferred to building structure.
    c. Framing members transferring stresses, including those caused by thermal and structural movements, to glazing.

d. Noise or vibration created by wind and thermal and structural movements.
e. Loosening or weakening of fasteners, attachments, and other components.
f. Sealant failure.
g. Failure of operating units to function properly.

B. Structural Loads:

1. Wind Loads: See structural drawings.

C. Deflection of Framing Members:

1. Deflection Normal to Wall Plane: Limited to 1/175 of clear span for spans up to 13 feet 6 inches and to 1/240 of clear span plus 1/4 inch for spans greater than 13 feet 6 inches or an amount that restricts edge deflection of individual glazing lites to 3/4 inch, whichever is less.
2. Deflection Parallel to Glazing Plane: Limited to 1/360 of clear span or 1/8 inch, whichever is smaller.

D. Structural-Test Performance: Provide aluminum-framed systems tested according to ASTM E 330 as follows:

1. When tested at positive and negative wind-load design pressures, systems do not evidence deflection exceeding specified limits.
2. When tested at 150 percent of positive and negative wind-load design pressures, systems, including anchorage, do not evidence material failures, structural distress, and permanent deformation of main framing members exceeding 0.2 percent of span.
3. Test Durations: As required by design wind velocity but not less than 10 seconds.

E. Thermal Movements: Provide aluminum-framed systems that allow for thermal movements resulting from the following maximum change (range) in ambient and surface temperatures. Base engineering calculation on surface temperatures of materials due to both solar heat gain and nighttime-sky heat loss.

1. Temperature Change (Range): 120 deg F, ambient; 180 deg F, material surfaces.

F. Air Infiltration: Provide aluminum-framed systems with maximum air leakage through fixed glazing and framing areas of 0.06 cfm/sq. ft. of fixed wall area when tested according to ASTM E 283 at a minimum static-air-pressure difference of 1.57 lbf/sq. ft.

G. Water Penetration Under Static Pressure: Provide aluminum-framed systems that do not evidence water penetration through fixed glazing and framing areas when tested according to ASTM E 331 at a minimum static-air-pressure difference of 20 percent of positive wind-load design pressure, but not less than 6.24 lbf/sq. ft..

H. Sound Transmission: Provide aluminum-framed systems with fixed glazing and framing areas having minimum STC 32 according to ASTM E 413 and an OITC 26 according to ASTM E 1332, as determined by testing according to ASTM E 90.

1.4 SUBMITTALS

A. Product Data: Include construction details, material descriptions, dimensions of individual components and profiles, and finishes for each type of product indicated.

B. Shop Drawings: For aluminum-framed systems. Include plans, elevations, sections, details, and attachments to other work.

1. Include details of provisions for system expansion and contraction and for draining moisture occurring within the system to the exterior.
2. For entrances, include hardware schedule and indicate operating hardware types, functions, quantities, and locations.

C. Samples for Verification: For each type of exposed finish required, in manufacturer's standard sizes.

D. Maintenance Data: For aluminum-framed systems to include in maintenance manuals.

E. Warranties: Special warranties specified in this Section.

1.5 QUALITY ASSURANCE

A. Installer Qualifications: Capable of assuming engineering responsibility and performing work of this Section and who is acceptable to manufacturer.

1. Engineering Responsibility: Preparation of data for aluminum-framed systems including Shop Drawings based on testing and engineering analysis of manufacturer's standard units in assemblies similar to those indicated for this Project and submission of reports of tests performed on manufacturer's standard assemblies.

B. Product Options: Information on Drawings and in Specifications establishes requirements for systems' aesthetic effects and performance characteristics. Aesthetic effects are indicated by dimensions, arrangements, alignment, and profiles of components and assemblies as they relate to sightlines, to one another, and to adjoining construction. Performance characteristics are indicated by criteria subject to verification by one or more methods including preconstruction testing, field testing, and in-service performance.

1. Do not modify intended aesthetic effects, as judged solely by Architect, except with Architect's approval. If modifications are proposed, submit comprehensive explanatory data to Architect for review.

1.6 PROJECT CONDITIONS

A. Field Measurements: Verify actual locations of structural supports for aluminum-framed systems by field measurements before fabrication and indicate measurements on Shop Drawings.

1.7 WARRANTY

A. Special Assembly Warranty: Manufacturer's standard form in which manufacturer agrees to repair or replace components of aluminum-framed systems that do not comply with requirements or that deteriorate as defined in this Section within specified warranty period.

1. Failures include, but are not limited to, the following:

a. Structural failures including, but not limited to, excessive deflection.

b. Noise or vibration caused by thermal movements.
c. Deterioration of metalsand other materials beyond normal weathering.
d. Water leakage through fixed glazing and framing areas.
e. Failure of operating components to function properly.

2. Warranty Period: Five years from date of Substantial Completion.

B. Special Finish Warranty: Manufacturer's standard form in which manufacturer agrees to repair or replace components on which finishes fail within specified warranty period. Warranty does not include normal weathering.

1. Warranty Period: 20 years from date of Substantial Completion.

PART 2 - PRODUCTS

2.1 MANUFACTURERS

A. Manufacturers: Subject to compliance with requirements, manufacturers offering products that may be incorporated into the Work include:

1. Kawneer.
2. Tubelite Inc.
3. United States Aluminum.
4. Capital Aluminum and Glass.
5. Cross

B. FRP (Fiberglass Reinforced Polyester): Where FRP doors are scheduled, provide products from one of the following manufacturer's:

1. Special-Lite, Inc.
2. Commercial Door
3. Capital Aluminum and Glass.
4. Kawneer

2.2 MATERIALS

A. Aluminum: Alloy and temper recommended by manufacturer for type of use and finish indicated.

1. Sheet and Plate: ASTM B 209.
2. Extruded Bars, Rods, Profiles, and Tubes: ASTM B 221.
3. Extruded Structural Pipe and Tubes: ASTM B 429.
4. Structural Profiles: ASTM B 308/B 308M.

B. Steel Reinforcement: With manufacturer's standard corrosion-resistant primer complying with SSPC-PS Guide No. 12.00 applied immediately after surface preparation and pretreatment. Select surface preparation methods according to recommendations in SSPC-SP COM and prepare surfaces according to applicable SSPC standard.

1. Structural Shapes, Plates, and Bars: ASTM A 36/A 36M.

2. Cold-Rolled Sheet and Strip: ASTM A 1008/A 1008M.
3. Hot-Rolled Sheet and Strip: ASTM A 1011/A 1011M.

C. FRP Door Face Sheet:

1. Embossed fiberglass reinforced polyester (F.R.P.) 0.120" thick.
2. Core of flush doors to be froth-in-place urethane foam at 2.5 lb./cu. ft. density and to have zero ozone depletion potential and contains no CFC's or HCHC's.

2.3 FRAMING SYSTEMS

A. Framing Members: Manufacturer's standard extruded-aluminum framing members of thickness required and reinforced as required to support imposed loads with a minimum wall thickness of .125".

1. Construction: Framing members are composite assemblies of two separate extruded-aluminum components permanently bonded by an elastomeric material of low thermal conductance.

B. Brackets and Reinforcements: Manufacturer's standard high-strength aluminum with nonstaining, nonferrous shims for aligning system components.

C. Fasteners and Accessories: Manufacturer's standard corrosion-resistant, nonstaining, nonbleeding fasteners and accessories compatible with adjacent materials.

1. Where fasteners are subject to loosening or turning out from thermal and structural movements, wind loads, or vibration, use self-locking devices.
2. Reinforce members as required to receive fastener threads.

D. Concrete and Masonry Inserts: Hot-dip galvanized cast-iron, malleable-iron, or steel inserts complying with ASTM A 123/A 123M or ASTM A 153/A 153M requirements.

E. Flashing: Manufacturer's standard corrosion-resistant, nonstaining, nonbleeding flashing compatible with adjacent materials. Form exposed flashing from sheet aluminum finished to match framing and of sufficient thickness to maintain a flat appearance without visible deflection.

F. Framing System Gaskets and Sealants: Manufacturer's standard recommended by manufacturer for joint type.

2.4 GLAZING SYSTEMS

A. Glazing: As specified in Division 8 Section "Glazing."

B. Glazing Gaskets: Manufacturer's standard compression types, replaceable, molded or extruded, that maintain uniform pressure and watertight seal.

C. Spacers and Setting Blocks: Manufacturer's standard elastomeric types.

2.5 DOORS

A. Doors: Manufacturer's standard glazed doors, for manual swing operation.

1. Door Construction: 1-3/4-inch overall thickness, with minimum 0.125-inch- thick, extruded-aluminum tubular rail and stile members. Mechanically fasten corners with reinforcing brackets that are deep penetration and fillet welded or that incorporate concealed tie rods.
2. Door Design: Wide stile; 5-inch nominal width.

    a. Accessible Doors: Smooth surfaced for width of door in area within 10 inches above floor or ground plane.

3. Glazing Stops and Gaskets: Square, snap-on, extruded-aluminum stops and preformed gaskets.

    a. Provide nonremovable glazing stops on outside of door.

B. Doors: Manufacturer's standard flush aluminum doors, for manual swing operation.

1. Door Construction: 1-3/4-inch overall thickness, with minimum 0.125-inch- thick, extruded-aluminum tubular rail and stile members. Mechanically fasten corners with reinforcing brackets that are deep penetration and fillet welded or that incorporate concealed tie rods. Face sheets shall be minimum .040" aluminum sheet.

2. Glazing Stops and Gaskets: Square, snap-on, extruded-aluminum stops and preformed gaskets.

C. Doors: Manufacturer's standard flush fiberglass reinforced polyester (FRP) doors, for manual swing operation.

1. Door Construction: 1-3/4-inch overall thickness, with minimum 0.125-inch- thick, extruded-aluminum tubular rail and stile members. Mechanically fasten corners with reinforcing brackets that are deep penetration and fillet welded or that incorporate concealed tie rods. Face sheet shall be minimum .210" textured FRP.

2. Glazing Stops and Gaskets: Square, snap-on, extruded-aluminum stops and preformed gaskets.

D. Door Hardware: As specified in Division 8 Section "Door Hardware."

2.6 ACCESSORY MATERIALS

A. Joint Sealants: For installation at perimeter of aluminum-framed systems, as specified in Division 7 Section "Joint Sealants."

B. Bituminous Paint: Cold-applied asphalt-mastic paint complying with SSPC-Paint 12 requirements except containing no asbestos, formulated for 30-mil thickness per coat.

2.7 FABRICATION

A. Form aluminum shapes before finishing.

B. Framing Members, General: Fabricate components that, when assembled, have the following characteristics:

1. Profiles that are sharp, straight, and free of defects or deformations.
2. Accurately fitted joints with ends coped or mitered.
3. Means to drain water passing joints, condensation occurring within framing members, and moisture migrating within the system to exterior.
4. Physical and thermal isolation of glazing from framing members.
5. Accommodations for thermal and mechanical movements of glazing and framing to maintain required glazing edge clearances.
6. Provisions for field replacement of glazing from exterior.
7. Fasteners, anchors, and connection devices that are concealed from view to greatest extent possible.

C. Mechanically Glazed Framing Members: Fabricate for flush glazing (without projecting stops).

D. Storefront Framing: Fabricate components for assembly using shear-block system or screw-spline system.

E. Door Frames: Reinforce as required to support loads imposed by door operation and for installing hardware.

1. At exterior doors, provide compression weather stripping at fixed stops.

F. Doors: Reinforce doors as required for installing hardware.

1. At pairs of exterior doors, provide sliding weather stripping retained in adjustable strip mortised into door edge.
2. At exterior doors, provide weather sweeps applied to door bottoms.

G. Hardware Installation: Factory install hardware to the greatest extent possible. Cut, drill, and tap for factory-installed hardware before applying finishes.

H. After fabrication, clearly mark components to identify their locations in Project according to Shop Drawings.

2.8 ALUMINUM FINISHES

A. General: Comply with NAAMM's "Metal Finishes Manual for Architectural and Metal Products" for recommendations for applying and designating finishes.

B. Finish designations prefixed by AA comply with the system established by the Aluminum Association for designating aluminum finishes.

C. Class I, Color Anodic Finish: AA-M12C22A42/A44 (Mechanical Finish: nonspecular as fabricated; Chemical Finish: etched, medium matte; Anodic Coating: Architectural Class I, integrally colored or electrolytically deposited color coating 0.018 mm or thicker) complying with AAMA 611.

1. Color:

a. Smith: Dark bronze.
b. Larson and Boulan: Medium bronze, match existing.

2.9 FRP FINISHES

A. General: Manufacturer's standard color impregnated fiber reinforced polyester embossed surface.

1. Color: Smith - Dark Bronze.

PART 3 - EXECUTION

3.1 EXAMINATION

A. Examine areas, with Installer present, for compliance with requirements for installation tolerances and other conditions affecting performance of work.

1. Proceed with installation only after unsatisfactory conditions have been corrected.

3.2 INSTALLATION

A. General:

1. Comply with manufacturer's written instructions.
2. Do not install damaged components.
3. Fit joints to produce hairline joints free of burrs and distortion.
4. Rigidly secure nonmovement joints.
5. Install anchors with separators and isolators to prevent metal corrosion and electrolytic deterioration.
6. Seal joints watertight, unless otherwise indicated.

B. Metal Protection:

1. Where aluminum will contact dissimilar metals, protect against galvanic action by painting contact surfaces with primer or by applying sealant or tape or installing nonconductive spacers as recommended by manufacturer for this purpose.
2. Where aluminum will contact concrete or masonry, protect against corrosion by painting contact surfaces with bituminous paint.

C. Install components to drain water passing joints, condensation occurring within framing members, and moisture migrating within the system to exterior.

D. Set continuous sill members and flashing in full sealant bed as specified in Division 7 Section "Joint Sealants" and to produce weathertight installation.

E. Install components plumb and true in alignment with established lines and grades, without warp or rack.

F. Install glazing as specified in Division 8 Section "Glazing."

G. Entrances: Install to produce smooth operation and tight fit at contact points.

1. Exterior Entrances: Install to produce tight fit at weather stripping and weathertight closure.

2. Field-Installed Hardware: Install surface-mounted hardware according to hardware manufacturers' written instructions using concealed fasteners to greatest extent possible.

H. Install perimeter joint sealants as specified in Division 7 Section "Joint Sealants" and to produce weathertight installation.

I. Erection Tolerances: Install aluminum-framed systems to comply with the following maximum tolerances:

1. Location and Plane: Limit variation from true location and plane to 1/8 inch in 12 feet; 1/4 inch over total length.
2. Alignment:

   a. Where surfaces abut in line, limit offset from true alignment to 1/16 inch.
   b. Where surfaces meet at corners, limit offset from true alignment to 1/32 inch.

3. Diagonal Measurements: Limit difference between diagonal measurement to 1/8 inch.

3.3 ADJUSTING

A. Entrances: Adjust operating hardware for smooth operation according to hardware manufacturers' written instructions.

1. For doors accessible to people with disabilities, adjust closers to provide a 3-second closer sweep period for doors to move from a 70-degree open position to 3 inches from the latch measured to the leading door edge.

END OF SECTION 08411

SECTION 08520
ALUMINUM WINDOWS

PART 1 - GENERAL

1.1 RELATED DOCUMENTS

A. Drawings and general provisions of the Contract, including General and Supplementary Conditions and Division 1 Specification Sections, apply to this Section.

1.2 SUMMARY

A. This Section includes fixed and operable aluminum-framed windows for exterior locations.

B. Related Sections include the following:

1. Division 8 Section "Aluminum-Framed Entrances and Storefronts" for coordinating finish among aluminum fenestration units.

1.3 DEFINITIONS

A. Performance class designations according to AAMA/WDMA 101/I.S.2/NAFS:

1. AW: Architectural.

B. Performance grade number according to AAMA/WDMA 101/I.S.2/NAFS:

1. Design pressure number in pounds force per square foot used to determine the structural test pressure and water test pressure.

C. Structural Test Pressure: For uniform load structural test, is equivalent to 150 percent of the design pressure.

D. Minimum Test Size: Smallest size permitted for performance class (gateway test size). Products must be tested at minimum test size or at a size larger than minimum test size to comply with requirements for performance class.

1.4 PERFORMANCE REQUIREMENTS

A. General: Provide aluminum windows capable of complying with performance requirements indicated, based on testing manufacturer's windows that are representative of those specified, and that are of minimum test size indicated below:

1. Size indicated on Drawings.

B. Structural Performance: Provide aluminum windows capable of withstanding the effects of the following loads, based on testing units representative of those indicated for Project that pass AAMA/WDMA 101/I.S.2/NAFS, Uniform Load Structural Test:

1. Design Wind Loads: Determine design wind loads applicable to Project from basic wind speed indicated in miles per hour at 33 feet above grade, according to ASCE 7, Section 6.5, "Method 2-Analytical Procedure," based on mean roof heights above grade indicated on Drawings.

a. Basic Wind Speed 90 MPH.
b. Importance Factor III.
c. Exposure Category C.

2. Deflection: Design glass framing system to limit lateral deflections of glass edges to less than 1/175 of glass-edge length or 3/4 inch, whichever is less, at design pressure based on testing performed according to AAMA/WDMA 101/I.S.2/NAFS, Uniform Load Deflection Test or structural computations.

C. Thermal Movements: Provide aluminum windows, including anchorage, that allow for thermal movements resulting from the following maximum change (range) in ambient and surface temperatures by preventing buckling, opening of joints, overstressing of components, failure of joint sealants, failure of connections, and other detrimental effects. Base engineering calculation on surface temperatures of materials due to both solar heat gain and nighttime-sky heat loss.

1. Temperature Change (Range): 120 deg F, ambient; 180 deg F material surfaces.

1.5 SUBMITTALS

A. Product Data: Include construction details, material descriptions, fabrication methods, dimensions of individual components and profiles, hardware, finishes, and operating instructions for each type of aluminum window indicated.

B. Shop Drawings: Include plans, elevations, sections, details, hardware, attachments to other work, operational clearances, installation details, and the following:

1. Joinery details.
2. Expansion provisions.
3. Flashing and drainage details.
4. Weather-stripping details.
5. Glazing details.
6. Window cleaning provisions.
7. For installed products indicated to comply with design loads, include structural analysis data prepared by or under the supervision of a qualified professional engineer detailing fabrication and assembly of aluminum windows and used to determine the following:

a. Structural test pressures and design pressures from wind loads indicated.
b. Deflection limitations of glass framing systems.

C. Qualification Data: For Installer, manufacturer, professional engineer and testing agency.

D. Product Test Reports: Based on evaluation of comprehensive tests performed within the last four years by a qualified testing agency for each type, class, grade, and size of aluminum window. Test results based on use of downsized test units will not be accepted.

E. Maintenance Data: For operable window sash, operating hardware, weather stripping and finishes to include in maintenance manuals.

F. Warranty: Special warranty specified in this Section.

1.6 QUALITY ASSURANCE

A. Installer Qualifications: An installer acceptable to aluminum window manufacturer for installation of units required for this Project.

1. Installer's responsibilities include providing professional engineering services needed to assume engineering responsibility.
2. Engineering Responsibility: Preparation of data for aluminum windows, including Shop Drawings, based on testing and engineering analysis of manufacturer's standard units in assemblies similar to those indicated for this Project.

B. Manufacturer Qualifications: A manufacturer capable of fabricating aluminum windows that meet or exceed performance requirements indicated and of documenting this performance by inclusion in lists and by labels, test reports, and calculations.

C. Source Limitations: Obtain aluminum windows through one source from a single manufacturer.

D. Product Options: Drawings indicate size, profiles, and dimensional requirements of aluminum windows and are based on the specific system indicated. Refer to Division 1 Section "Product Requirements." Do not modify size and dimensional requirements.

1. Do not modify intended aesthetic effects, as judged solely by Architect, except with Architect's approval. If modifications are proposed, submit comprehensive explanatory data to Architect for review.

E. Fenestration Standard: Comply with AAMA/WDMA 101/I.S.2/NAFS, "North American Fenestration Standard Voluntary Performance Specification for Windows, Skylights and Glass Doors," for definitions and minimum standards of performance, materials, components, accessories, and fabrication. Comply with more stringent requirements if indicated.

1. Provide AAMA-certified aluminum windows with an attached label.

F. Glazing Publications: Comply with published recommendations of glass manufacturers and with GANA's "Glazing Manual" unless more stringent requirements are indicated.

G. Preinstallation Conference: Conduct conference at Project site to comply with requirements in Division 1 Section "Project Management and Coordination." Review methods and procedures related to aluminum windows.

1.7 PROJECT CONDITIONS

A. Field Measurements: Verify aluminum window openings by field measurements before fabrication and indicate measurements on Shop Drawings.

1. Established Dimensions: Where field measurements cannot be made without delaying the Work, establish opening dimensions and proceed with fabricating aluminum windows without field measurements. Coordinate wall construction to ensure that actual opening dimensions correspond to established dimensions.

1.8 WARRANTY

A. Special Warranty: Manufacturer's standard form in which manufacturer agrees to repair or replace aluminum windows that fail in materials or workmanship within specified warranty period.

1. Failures include, but are not limited to, the following:

a. Failure to meet performance requirements.
b. Structural failures including excessive deflection, water leakage, air infiltration, or condensation.
c. Faulty operation of movable sash and hardware.
d. Deterioration of metals, other materials, and metal finishes beyond normal weathering.
e. Failure of insulating glass.

2. Warranty Period:

a. Window: Ten years from date of Substantial Completion.
b. Glazing: 10 years from date of Substantial Completion.
c. Metal Finish: 15 years from date of Substantial Completion.

PART 2 - PRODUCTS

2.1 MANUFACTURERS

A. Available Manufacturers: Subject to compliance with requirements, manufacturers offering products that may be incorporated into the Work include, but are not limited to, the following:

B. Projected:

1. EFCO Corporation. 675, 3903
2. Kawneer; an Alcoa Company. 8325T
3. TRACO. 3100, 750
4. Winco Window Company. 1450H
5. Litex. 900T
6. Capital Aluminum and Glass. 325

C. Single Hung:

1. Kawneer; an Alcoa Company. 8400T
2. Litex 701 T
3. Peerless Products Inc. 9150
4. Wausau Window and Wall Systems. 3151

D. Double Hung:

1. Custom Window Company. 9250
2. EFCO Corporation. 675.

2.2 WINDOW

A. Window Types: Casement, Fixed, bottom-hinged inswinging, and projected awning.

B. AAMA/WDMA Performance Requirements: Provide aluminum windows of performance indicated that comply with AAMA/WDMA 101/I.S.2/NAFS.

1. Performance Class: IW-60 minimum.

C. Thermal Transmittance: Provide aluminum windows with a whole-window, U-factor maximum indicated at 15-mph exterior wind velocity and winter condition temperatures when tested according to AAMA 1503.

1. U-Factor: 0.60 Btu/sq. ft. x h x deg F or less.

D. Air Infiltration: Maximum rate not more than indicated when tested according to AAMA/WDMA 101/I.S.2/NAFS, Air Infiltration Test.

1. Maximum Rate: 0.01 cfm/sq. ft. of area at an inward test pressure of 1.57 lbf/sq. ft..

E. Water Resistance: No water leakage as defined in AAMA/WDMA referenced test methods at a water test pressure equaling that indicated, when tested according to AAMA/WDMA 101/I.S.2/NAFS, Water Resistance Test.

1. Test Pressure: 20 percent of positive design pressure, but not more than 15 lbf/sq. ft..

F. Life-Cycle Testing: Test according to AAMA 910 and comply with AAMA/WDMA 101/I.S.2/NAFS.

G. Operating Force and Auxiliary (Durability) Tests: Comply with AAMA/WDMA 101/I.S.2/NAFS for operating window types indicated.

2.3 GLAZING

A. Glass and Glazing Materials: Refer to Division 8 Section "Glazing" for glass units and glazing requirements applicable to glazed aluminum window units.

2.4 HARDWARE

A. General: Provide manufacturer's standard hardware fabricated from aluminum, stainless steel, carbon steel complying with AAMA 907, or other corrosion-resistant material compatible with aluminum; designed to smoothly operate, tightly close, and securely lock aluminum windows, and sized to accommodate sash or ventilator weight and dimensions. Do not use aluminum in frictional contact with other metals. Where exposed, provide solid bronze or nonmagnetic stainless steel.

B. Counterbalancing Mechanism: Comply with AAMA 902.

1. Sash Balance: Concealed, spring loaded, block and tackle type or ultralift spring type capable of lifting 70 percent of sash weight, of size and capacity to hold sash stationary at any open position.

C. Sill Cap/Track: Extruded-aluminum track with finish to match windows of thickness, dimensions, and profile indicated; designed to comply with performance requirements indicated and to drain to the exterior.

D. Locks and Latches: Designed to allow unobstructed movement of the sash across adjacent sash in direction indicated and operated from the inside only.

E. Double or Single Hung Windows: Provide the following operating hardware:

1. Sash Balances: Four concealed, spring loaded, block and tackle type or two ultralift spring type capable of lifting 70 percent of sash weight, of size and capacity to hold sash stationary at any open position.
2. Handle: Continuous, integral, sash lift bar and pull down on bottom rail of forward placed operating sash.
3. Sash Lock: Cam-action sweep lock and keeper on meeting rail; one per sash, and spring loaded, snap type lock on bottom rail of lower sash.
4. Pole Socket: Provide a pole socket or groove on inside face of top rail of upper and/or lower sash on windows with meeting rails more than 72 inches above floor.
5. Limit Device: Sash stop limit device; for each operable sash located at jamb; two per sash.
6. Removable Lift-Out Sash: Design windows and provide with hardware to permit removal of sash from inside of ceiling.

F. Projected Windows: Provide the following operating hardware:

1. Operator: Underscreen pivot shot type.
2. Hinge: Concealed four or six bar friction hinge with adjustable slide friction shoe; two per ventilator.
3. Lock: Cam-action, sweep lock handle with strike; two per ventilator.

G. Projected Awning Windows: Provide the following operating hardware:

1. Operator: Lever operated located on jam at sill.
2. Hinge: Concealed four or six bar friction hinge located on each jamb near top rail; two per ventilator.

3. Lock: Combination lever handle and cam action lock with concealed pawl and keeper; one minimum per ventilator.
4. Limit Device: Concealed friction adjustor, adjustable stay bar limit device; located on jamb of each ventilator.

2.5 INSECT SCREENS

A. General: Design windows and hardware to accommodate screens in a tight-fitting, removable arrangement, with a minimum of exposed fasteners and latches. Fabricate insect screens to fully integrate with window frame. Locate screens on outside of window and provide for each operable exterior sash or ventilator.

1. Aluminum Tubular Frame Screens: Comply with SMA 1004, "Specifications for Aluminum Tubular Frame Screens for Windows," Architectural C-24 class.
2. Comply with SMA 1004, "Specifications for Aluminum Tubular Frame Screens for Windows," for minimum standards of appearance, fabrication, attachment of screen fabric, hardware, and accessories unless more stringent requirements are indicated.

B. Aluminum Wire Fabric: 18-by-16 mesh of 0.011-inch- diameter, coated aluminum wire.

1. Wire-Fabric Finish:

a. Charcoal Grey.

C. Wickets: Provide sliding or hinged wickets, framed and trimmed for a tight fit and for durability during handling.

2.6 FABRICATION

A. Fabricate aluminum windows in sizes indicated. Include a complete system for assembling components and anchoring windows.

B. Fabricate aluminum windows that are reglazable without dismantling sash or ventilator framing.

C. Weather Stripping: Provide full-perimeter weather stripping for each operable sash and ventilator.

D. Weep Holes: Provide weep holes and internal passages to conduct infiltrating water to exterior.

E. Provide water-shed members above side-hinged ventilators and similar lines of natural water penetration.

F. Factory-Glazed Fabrication: Glaze aluminum windows in the factory where practical and possible for applications indicated. Comply with requirements in Division 8 Section "Glazing" and with AAMA/WDMA 101/I.S.2/NAFS.

G. Glazing Stops: Provide snap-on glazing stops coordinated with Division 8 Section "Glazing" and glazing system indicated. Provide glazing stops to match sash and ventilator frames.

2.7 FINISHES, GENERAL

A. Comply with NAAMM's "Metal Finishes Manual for Architectural and Metal Products" for recommendations for applying and designating finishes.

B. Protect mechanical finishes on exposed surfaces from damage by applying a strippable, temporary protective covering before shipping.

C. Appearance of Finished Work: Variations in appearance of abutting or adjacent pieces are acceptable if they are within one-half of the range of approved Samples. Noticeable variations in the same piece are not acceptable. Variations in appearance of other components are acceptable if they are within the range of approved Samples and are assembled or installed to minimize contrast.

2.8 ALUMINUM FINISHES

A. Finish designations prefixed by AA comply with the system established by the Aluminum Association for designating aluminum finishes.

B. Class II, Clear Anodic Finish: AA-M12C22A31 (Mechanical Finish: nonspecular as fabricated; Chemical Finish: etched, medium matte; Anodic Coating: Architectural Class II, clear coating 0.010 mm or thicker) complying with AAMA 611.

PART 3 - EXECUTION

3.1 EXAMINATION

A. Examine openings, substrates, structural support, anchorage, and conditions, with Installer present, for compliance with requirements for installation tolerances and other conditions affecting performance of work. Verify rough opening dimensions, levelness of sill plate, and operational clearances. Examine wall flashings, vapor retarders, water and weather barriers, and other built-in components to ensure a coordinated, weathertight window installation.

1. Masonry Surfaces: Visibly dry and free of excess mortar, sand, and other construction debris.
2. Metal Surfaces: Dry; clean; free of grease, oil, dirt, rust, corrosion, and welding slag; without sharp edges or offsets at joints.
3. Proceed with installation only after unsatisfactory conditions have been corrected.

3.2 INSTALLATION

A. Comply with Drawings, Shop Drawings, and manufacturer's written instructions for installing windows, hardware, accessories, and other components.

B. Install windows level, plumb, square, true to line, without distortion or impeding thermal movement, anchored securely in place to structural support, and in proper relation to wall flashing and other adjacent construction.

C. Set sill members in bed of sealant or with gaskets, as indicated, for weathertight construction.

D. Install windows and components to drain condensation, water penetrating joints, and moisture migrating within windows to the exterior.

E. Separate aluminum and other corrodible surfaces from sources of corrosion or electrolytic action at points of contact with other materials.

3.3 ADJUSTING, CLEANING, AND PROTECTION

A. Adjust operating sashes and ventilators, screens, hardware,and accessories for a tight fit at contact points and weather stripping for smooth operation and weathertight closure. Lubricate hardware and moving parts.

B. Clean aluminum surfaces immediately after installing windows. Avoid damaging protective coatings and finishes. Remove excess sealants, glazing materials, dirt, and other substances.

C. Protect window surfaces from contact with contaminating substances resulting from construction operations. In addition, monitor window surfaces adjacent to and below exterior concrete and masonry surfaces during construction for presence of dirt, scum, alkaline deposits, stains, or other contaminants. If contaminating substances do contact window surfaces, remove contaminants immediately according to manufacturer's written recommendations.

3.4 DEMONSTRATION

A. Engage a factory-authorized service representative to train Owner's maintenance personnel to adjust, operate, and maintain window operating system. Refer to Division 1 Section "Demonstration and Training."

END OF SECTION 08520

SECTION 08710
DOOR HARDWARE

PART 1 - GENERAL

1.1 RELATED DOCUMENTS

A. Drawings and general provisions of the Contract, including General and Supplementary Conditions and Division 1 Specification Sections, apply to this Section.

1.2 SUMMARY

A. This Section includes the following:

1. Commercial door hardware for the following:

a. Swinging doors.

B. Related Sections include the following:

1. Division 8 Section "Standard Steel Doors and Frames" for astragals provided as part of fire-rated labeled assemblies and for door silencers provided as part of hollow-metal frames.
2. Division 8 Section "Flush Wood Doors" for astragals and integral intumescent seals provided as part of fire-rated labeled assemblies.
3. Division 8 Section "Aluminum-Framed Entrances, Storefronts and Curtain Walls" for door hardware, listed in section 08710 including cylinders.

C. Products and Services furnished, but not installed, under this Section include the following. Coordinating, purchasing, delivering, and scheduling remain requirements of this Section.

1.3 SUBMITTALS

A. Product Data: Include construction and installation details, material descriptions, dimensions of individual components and profiles, and finishes.

B. Samples for Verification: For exposed door hardware of each type, in specified finish, full size. Tag with full description for coordination with the door hardware sets. Submit Samples before, or concurrent with, submission of the final door hardware sets, if requested by the architect.

1. Samples will be returned to Contractor. Units that are acceptable and remain undamaged through submittal, review, and field comparison process may, after final check of operation, be incorporated into the Work, within limitations of keying requirements.

C. Qualification Certification: For Architectural Hardware Consultant.

D. Warranty: Special warranty specified in this Section.

E. Other Action Submittals:

1. Door Hardware Sets: Prepared by or under the supervision of Architectural Hardware Consultant, detailing fabrication and assembly of door hardware, as well as procedures and diagrams. Coordinate the final door hardware sets with doors, frames, and related work to ensure proper size, thickness, hand, function, and finish of door hardware.

   a. Format: Comply with scheduling sequence and vertical format in DHI's "Sequence and Format for the Hardware Schedule." Double space entries, and number and date each page.
   b. Format: Use same scheduling sequence and format and use same door numbers as in the Contract Documents.
   c. Content: Include the following information:

      1) Identification number, location, hand, fire rating, and material of each door and frame.
      2) Type, style, function, size, quantity, and finish of each door hardware item. Include description and function of each lockset and exit device.
      3) Complete designations of every item required for each door or opening including name and manufacturer.
      4) Fastenings and other pertinent information.
      5) Location of each door hardware set, cross-referenced to Drawings, both on floor plans and in door and frame schedule.
      6) Explanation of abbreviations, symbols, and codes contained in schedule.
      7) Mounting locations for door hardware.
      8) Door and frame sizes and materials.

   d. Submittal Sequence: Submit the door hardware sets at earliest possible date, particularly where approval of the door hardware sets must precede fabrication of other work that is critical in Project construction schedule. Include Product Data, Samples, Shop Drawings of other work affected by door hardware, and other information essential to the coordinated review of the door hardware sets.

1.4 QUALITY ASSURANCE

A. Architectural Hardware Consultant Qualifications: A person who is currently certified by DHI as an Architectural Hardware Consultant and who is experienced in providing consulting services for door hardware installations that are comparable in material, design, and extent to that indicated for this Project.

B. Source Limitations: Obtain each type and variety of door hardware from a single manufacturer, unless otherwise indicated.

C. Fire-Rated Door Assemblies: Assemblies complying with NFPA 80 that are listed and labeled by a testing and inspecting agency acceptable to authorities having jurisdiction, for fire ratings indicated, based on testing according to NFPA 252.

1. Test Pressure: Test at atmospheric pressure.

D. Keying: All Corbin/Russwin lock cylinders shall be provided in the proper keyway, zero bitted by the hardware supplier. Keying of the cylinders will be by the owner.

E. Preinstallation Conference: Conduct a mandatory conference at Project site to comply with requirements in Division 1 Section "Project Management and Coordination." Review methods and procedures relating to the installation of locksets, exit devices, door closers, overhead type stops and wall or floor type stops and holders Product manufacturers representatives shall illustrate and instruct the proper installation methods, along with the correct type of fasteners for use when installing their products.

1.5 DELIVERY, STORAGE, AND HANDLING

A. Inventory door hardware on receipt and provide secure lock-up for door hardware delivered to Project site.

B. Tag each item or package separately with identification related to the final door hardware sets, and include basic installation instructions, templates, and necessary fasteners with each item or package.

1.6 COORDINATION

A. Templates: Distribute door hardware templates for doors, frames, and other work specified to be factory prepared for installing door hardware. Check Shop Drawings of other work to confirm that adequate provisions are made for locating and installing door hardware to comply with indicated requirements.

B. Existing Openings: Where new hardware components are scheduled for application to existing construction or where modifications to existing door hardware are required, field verify existing conditions and coordinate installation of door hardware to suit opening conditions and to provide for proper operation.

1.7 WARRANTY

A. Special Warranty: Manufacturer's standard form in which manufacturer agrees to repair or replace components of door hardware that fails in materials or workmanship within specified warranty period.

1. Failures include, but are not limited to, the following:

a. Structural failures including excessive deflection, cracking, or breakage.
b. Faulty operation of operators and door hardware.
c. Deterioration of metals, metal finishes, and other materials beyond normal weathering and use.

2. Warranty Period: One year from date of Substantial Completion, except as follows:

a. Locksets: One year from date of Substantial Completion.
b. Exit Devices: Two years from date of Substantial Completion.
c. Manual Closers: Ten years from date of Substantial Completion.

1.8 MAINTENANCE SERVICE

A. Maintenance Tools and Instructions: Furnish a complete set of specialized tools and maintenance instructions as needed for Owner's continued adjustment, maintenance, and removal and replacement of door hardware.

PART 2 - PRODUCTS

2.1 SCHEDULED DOOR HARDWARE

A. General: Provide door hardware for each door to comply with requirements in this Section and door hardware sets listed in door and frame schedule and door hardware sets indicated in Part 3 "Door Hardware Sets" Article.

1. Door Hardware Sets: Provide quantity, item, size, finish or color indicated, and named manufacturers' products listed in hardware sets or those listed as acceptable.

B. Designations: Requirements for design, grade, function, finish, size, and other distinctive qualities of each type of door hardware are indicated in Part 3 "Door Hardware Sets" Article. Products are identified by using door hardware designations, as follows:

1. Named Manufacturers' Products: Manufacturer and product designation are listed for each door hardware type required for the purpose of establishing minimum requirements. Manufacturers' names are abbreviated in the "Door Hardware Sets."
2. References to BHMA Standards: Provide named products complying with these standards and requirements for description, quality, and function.

C. In other Part 2 articles where titles below introduce lists, the following requirements apply to product selection:

1. Available Manufacturers: Subject to compliance with requirements, manufacturers offering products that may be incorporated into the Work include, those manufacturers specified or named as acceptable.

2.2 HINGES, GENERAL

A. Quantity: Provide the following, unless otherwise indicated:

1. Two Hinges: For doors with heights up to 60 inches (1524 mm).
2. Three Hinges: For doors with heights 61 to 90 inches (1549 to 2286 mm).
3. Four Hinges: For doors with heights 91 to 120 inches (2311 to 3048 mm).

4. For doors with heights more than 120 inches (3048 mm), provide 4 hinges, plus 1 hinge for every 30 inches (750 mm) of door height greater than 120 inches (3048 mm).

B. Template Requirements: Except for hinges and pivots to be installed entirely (both leaves) into wood doors and frames, provide only template-produced units.

C. Hinge Weight: Unless otherwise indicated, provide the following:

1. Exterior Doors: Heavy-duty continuous aluminum gear hinges.
2. Doors with Closers: Antifriction-bearing hinges.
3. Interior Doors: Antifriction-bearings. Standard or heavy weight hinges as listed in the hardware sets.

D. Hinge Base Metal: Unless otherwise indicated, provide the following:

1. Exterior Hinges: Aluminum gear hinges anodized after machining.
2. Interior Hinges: - Brass, with stainless-steel pin body and brass protruding heads, Steel, with steel pin, or Stainless steel, with stainless steel pin as listed in hardware sets.
3. Hinges for Fire-Rated Assemblies: Steel, with steel pin, or Stainless steel, with stainless-steel pin.

E. Hinge Options: Where indicated in door hardware sets or on Drawings:
1. Nonremovable Pins: Provide set screw in hinge barrel that, when tightened into a groove in hinge pin, prevents removal of pin while door is closed; for outswinging exterior doors.
2. Corners: Square.

F. Fasteners: Comply with the following:

1. Machine Screws: For metal doors and frames. Install into drilled and tapped holes.
2. Wood Screws: For wood doors and frames.
3. Threaded-to-the-Head Wood Screws: For fire-rated wood doors.
4. Screws: Phillips flat-head; Finish screw heads to match surface of hinges.

2.3 HINGES

A. Butts and Hinges: BHMA A156.1. Listed under Category A in BHMA's "Certified Product Directory."

B. Template Hinge Dimensions: BHMA A156.7.

C. Available Manufacturers:

1. Bommer Industries, Inc. (BOM).
2. Hager Companies (HAG).
3. Ives, an Ingersol-Rand company. (IVE)
4. McKinney Products Company; an ASSA ABLOY Group company (MCK).
5. Select products. (SEL).

2.4 LOCKS AND LATCHES, GENERAL

A. Accessibility Requirements: Where indicated to comply with accessibility requirements, comply with the U.S. Architectural & Transportation Barriers Compliance Board's "Americans with Disabilities Act (ADA), Accessibility Guidelines for Buildings and Facilities (ADAAG)." ANSI A117.1. FED-STD-795, "Uniform Federal Accessibility Standards." 2003 Michigan Building Code.

1. Provide operating devices that do not require tight grasping, pinching, or twisting of the wrist and that operate with a force of not more than 5 lbf (22 N).

B. Latches and Locks for Means of Egress Doors: Comply with NFPA 101. Latches shall not require more than 15 lbf (67 N) to release the latch. Locks shall not require use of a key, tool, or special knowledge for operation.

C. Lock Trim:

1. Levers: Wrought.
2. Roses: Wrought.
3. Lockset Designs: Corbin/Russwin LWA.

D. Lock Throw: Comply with testing requirements for length of bolts required for labeled fire doors, and as follows:
1. Mortise Locks: Minimum 3/4-inch (19-mm) latch bolt throw.
2. Deadbolts: Minimum 1-inch (25-mm) bolt throw.

E. Backset: 2-3/4 inches (70 mm), unless otherwise indicated.

F. Strikes: Manufacturer's standard strike with strike box for each latch bolt or lock bolt, with lip extended to protect frame, finished to match door hardware set, and as follows:
1. Strikes for Mortise Locks and Latches: BHMA A156.13.
2. Flat-Lip Strikes: For locks with three-piece antifriction latchbolts, as recommended by manufacturer.

2.5 MECHANICAL LOCKS AND LATCHES

A. Lock Functions: Function numbers and descriptions indicated in door hardware sets comply with the following:

1. Mortise Locks: BHMA A156.13.

B. Mortise Locks: Stamped steel case with steel or brass parts; BHMA A156.13, Grade 1; Series 1000. Listed under Category F in BHMA's "Certified Product Directory."

1. Acceptable Manufacturer:
   a. Corbin Russwin; an ASSA Abloy group company (C-R). "No-Substitution"

2.6 EXIT DEVICES

A. Exit Devices: BHMA A156.3, Grade 1, Listed under Category G in BHMA's "Certified Product Directory."

B. Accessibility Requirements: Where handles, pulls, latches, locks, and other operating devices are indicated to comply with accessibility requirements, comply with the U.S. Architectural & Transportation Barriers Compliance Board's "Americans with Disabilities Act (ADA), Accessibility Guidelines for Buildings and Facilities (ADAAG)." ANSI A117.1. FED-STD-795, "Uniform Federal Accessibility Standards." 2003 Michigan Building Code.

1. Provide operating devices that do not require tight grasping, pinching, or twisting of the wrist and that operate with a force of not more than 5 lbf (22 N).

C. Exit Devices for Means of Egress Doors: Comply with NFPA 101. Exit devices shall not require more than 15 lbf (67 N) to release the latch. Locks shall not require use of a key, tool, or special knowledge for operation.

D. Panic Exit Devices: Listed and labeled by a testing and inspecting agency acceptable to authorities having jurisdiction, for panic protection, based on testing according to UL 305.

E. Removable Mullions: BHMA A156.3.

F. Acceptable Manufacturer:
1. Precision Hardware, Inc. (PRE). Apex Series "No-Substitution"

2.7 KEYING

1. Keying System: The contractor shall be responsible for providing correct 6 pin keyway cylinders to match existing building system, and keying new cylinders. The contractor shall meet with Mondo Belardi of Troy schools to obtain master and grand master keys for keying work, and assure that correct keyway cylinders are provided for new doors in additions or for new door openings in the existing buildings.

2.8 OPERATING TRIM

A. Standard: BHMA A156.6 and as listed in hardware sets.

B. Materials: Fabricate from stainless steel, unless otherwise indicated.

C. Acceptable Manufacturers:

1. Hager Companies (HAG).
2. IVES Hardware; an Ingersoll-Rand Company (IVE).
3. Rockwood Manufacturing Company (ROC).
4. Trimco (TRI).

2.9 CLOSERS

A. Accessibility Requirements: Where handles, pulls, latches, locks, and other operating devices are indicated to comply with accessibility requirements, comply with the U.S. Architectural & Transportation Barriers Compliance Board's "Americans with Disabilities Act (ADA), Accessibility Guidelines for Buildings and Facilities (ADAAG)." ANSI A117.1. FED-STD-795, "Uniform Federal Accessibility Standards." 2003 Michigan Building Code.

1. Comply with the following maximum opening-force requirements:

    a. Interior, Non-Fire-Rated Hinged Doors: 5 lbf (22.2 N) applied perpendicular to door.
    b. Fire Doors: Minimum opening force allowable by authorities having jurisdiction.

B. Door Closers for Means of Egress Doors: Comply with NFPA 101. Door closers shall not require more than 30 lbf (133 N) to set door in motion and not more than 15 lbf (67 N) to open door to minimum required width.

C. Size of Units: Unless otherwise indicated, comply with manufacturer's written recommendations for size of door closers depending on size of door, exposure to weather, and anticipated frequency of use. Provide factory-sized closers, adjustable to meet field conditions and requirements for opening force.

D. Surface Closers: BHMA A156.4, Grade 1. Listed under Category C in BHMA's "Certified Product Directory." Provide type of arm required for closer to be located on non-public side of door, unless otherwise indicated.

1. Acceptable Manufacturer:
    a. LCN Closers; an Ingersoll-Rand Company (LCN). "No-Substitution".

E. Size: 2 inches (38 mm) less than door width on push side and 1 inch (13 mm) less than door width on pull side, by height specified in door hardware sets.

F. Fasteners: Manufacturer's standard machine or self-tapping screws.

G. Metal Protective Trim Units: BHMA A156.6; beveled top and 2 sides; fabricated from material indicated in door hardware sets.

1. Material: 0.050-inch- (1.3-mm-) thick stainless steel.
2. Available Manufacturers:
    a. Hager Companies (HAG).
    b. IVES Hardware; an Ingersoll-Rand Company (IVE).
    c. Rockwood Manufacturing Company (ROC).
    d. Trimco (TRI).

2.10 STOPS AND HOLDERS

A. Stops and Bumpers: BHMA A156.16, Grade 1.

1. Provide wall stops for doors unless floor or other type stops are scheduled or indicated. Do not mount floor stops where they will impede traffic. Where wall or floor stops are not appropriate, provide overhead holders.

B. Mechanical Door Holders: BHMA A156.16, Grade 1.

C. Silencers for Metal Door Frames: BHMA A156.16, Grade 1; neoprene or rubber, minimum diameter 1/2 inch (13 mm); fabricated for drilled-in application to frame.

D. Acceptable Manufacturers:

1. Architectural Builders Hardware Mfg., Inc. (ABH).

2. Glynn Johnson; an Ingersoll-Rand Company (GLY).
3. Hager Companies (HAG).
4. IVES Hardware; an Ingersoll-Rand Company (IVE).
5. Rockwood Manufacturing Company (ROC).
6. Trimco (TRI).

2.11 THRESHOLDS

A. Standard: BHMA A156.21. Listed under Category J in BHMA's "Certified Product Directory."

B. Accessibility Requirements: Where thresholds are indicated to comply with accessibility requirements, comply with the U.S. Architectural & Transportation Barriers Compliance Board's "Americans with Disabilities Act (ADA), Accessibility Guidelines for Buildings and Facilities (ADAAG)." ANSI A117.1. FED-STD-795, "Uniform Federal Accessibility Standards."

1. Bevel raised thresholds with a slope of not more than 1:2. Provide thresholds not more than 1/2 inch (13 mm) high.

C. Thresholds for Means of Egress Doors: Comply with NFPA 101. Maximum 1/2 inch (13 mm) high.

D. Available Manufacturers:

1. Hager Companies (HAG).
2. National Guard Products (NGP).
3. Pemko Manufacturing Co. (PEM).
4. Reese Enterprises (RE).

2.12 FABRICATION

A. Base Metals: Produce door hardware units of base metal, fabricated by forming method indicated, using manufacturer's standard metal alloy, composition, temper, and hardness. Furnish metals of a quality equal to or greater than that of specified door hardware units and BHMA A156.18. Do not furnish manufacturer's standard materials or forming methods if different from specified standard.

B. Fasteners: Provide door hardware manufactured to comply with published templates generally prepared for machine, wood, and sheet metal screws. Provide screws according to commercially recognized industry standards for application intended, except aluminum fasteners are not permitted. Provide Phillips flat-head screws with finished heads to match surface of door hardware, unless otherwise indicated.

1. Concealed Fasteners: For door hardware units that are exposed when door is closed, except for units already specified with concealed fasteners. Use through bolts for installation where bolt head or nut on opposite face is exposed unless it is the only means of securely attaching the door hardware. Where through bolts are used on hollow door and frame construction, provide sleeves for each through bolt.
2. Steel Machine or Wood Screws: For the following fire-rated applications:

    a. Mortise hinges to doors.
    b. Strike plates to frames.
    c. Closers to door frames.

3. Steel Through Bolts: For the following fire-rated and non-rated applications even if door blocking is provided:
    a. Closers to doors.

4. Spacers or Sex Bolts: For through bolting of hollow-metal doors.
5. Fasteners for Wood Doors: Comply with requirements in DHI WDHS.2, "Recommended Fasteners for Wood Doors."
6. Install door closers and door holders with sex-bolts.

2.13 FINISHES

A. Standard: BHMA A156.18, as indicated in door hardware sets.

B. Protect mechanical finishes on exposed surfaces from damage by applying a strippable, temporary protective covering before shipping.

C. Appearance of Finished Work: Variations in appearance of abutting or adjacent pieces are acceptable if they are within one-half of the range of approved Samples. Noticeable variations in the same piece are not acceptable. Variations in appearance of other components are acceptable if they are within the range of approved Samples and are assembled or installed to minimize contrast.

PART 3 - EXECUTION

3.1 EXAMINATION

A. Examine doors and frames, with Installer present, for compliance with requirements for installation tolerances, labeled fire door assembly construction, wall and floor construction, and other conditions affecting performance.

B. Proceed with installation only after unsatisfactory conditions have been corrected.

3.2 PREPARATION

A. Steel Doors and Frames: Comply with DHI A115 Series.

1. Surface-Applied Door Hardware: Drill and tap doors and frames according to ANSI A250.6.

B. Wood Doors: Comply with DHI A115-W Series.

3.3 INSTALLATION

A. Mounting Heights: Mount door hardware units at heights indicated as follows unless otherwise indicated or required to comply with governing regulations.

1. Standard Steel Doors and Frames: DHI's "Recommended Locations for Architectural Hardware for Standard Steel Doors and Frames."
2. Wood Doors: DHI WDHS.3, "Recommended Locations for Architectural Hardware for Wood Flush Doors."

B. Install each door hardware item to comply with manufacturer's written instructions. Where cutting and fitting are required to install door hardware onto or into surfaces that are later to be painted or finished in another way, coordinate removal, storage, and reinstallation of surface protective trim units with finishing work specified in Division 9 Sections. Do not install surface-mounted items until finishes have been completed on substrates involved.

1. Set units level, plumb, and true to line and location. Adjust and reinforce attachment substrates as necessary for proper installation and operation.
2. Drill and countersink units that are not factory prepared for anchorage fasteners. Space fasteners and anchors according to industry standards.

C. Thresholds: Set thresholds for exterior and acoustical doors in full bed of sealant complying with requirements specified in Division 7 Section "Joint Sealants."

3.4 FIELD QUALITY CONTROL

A. Independent Architectural Hardware Consultant: Owner will engage a qualified independent Architectural Hardware Consultant to perform inspections and to prepare inspection reports.

1. Independent Architectural Hardware Consultant will inspect door hardware and state in each report whether installed work complies with or deviates from requirements, including whether door hardware is properly installed and adjusted.

3.5 ADJUSTING

A. Initial Adjustment: Adjust and check each operating item of door hardware and each door to ensure proper operation or function of every unit. Replace units that cannot be adjusted to operate as intended. Adjust door control devices to compensate for final operation of heating and ventilating equipment and to comply with referenced accessibility requirements.

1. Door Closers: Unless otherwise required by authorities having jurisdiction, adjust sweep period so that, from an open position of 70 degrees, the door will take at least 3 seconds to move to a point 3 inches (75 mm) from the latch, measured to the leading edge of the door.

3.6 CLEANING AND PROTECTION

A. Clean adjacent surfaces soiled by door hardware installation.

B. Clean operating items as necessary to restore proper function and finish.

C. Provide final protection and maintain conditions that ensure that door hardware is without damage or deterioration at time of Substantial Completion.

3.7 DEMONSTRATION

A. Engage a factory-authorized service representative to train Owner's maintenance personnel to adjust, operate, and maintain door hardware and door hardware finishes. Refer to Division 1 Section "Demonstration and Training."

3.8 DOOR HARDWARE SETS

SPECWORKS # 54663-B62Z4WYQ4

HW SET: 01

DOOR NUMBER:
S-100 S-327

EACH TO HAVE:

3	EA	HINGE	5BB1 4.5 X 4.5	652	IVE
1	EA	CLASSROOM LOCK	ML2055 LWA X1-67	630	C-R
1	EA	SURFACE CLOSER	4111 EDA X TB	689	LCN
1	EA	KICK PLATE	8400 10" X 1-1/2" LTDW B3E	630	IVE
1	EA	WALL STOP	WS401CVX	626	IVE
1	SET	SEALS	9550 1/36" 2/86"	AL	NGP

HW SET: 02

DOOR NUMBER:
S-200 S-201 S-202 S-204 S-205 S-206
S-207 S-209

EACH TO HAVE:

3	EA	HINGE	5BB1 4.5 X 4.5	652	IVE
1	EA	CLASSROOM LOCK	ML2055 LWA X1-67	630	C-R
1	EA	SURFACE CLOSER	4011 X TB	689	LCN
1	EA	KICK PLATE	8400 10" X 1-1/2" LTDW B3E	630	IVE
1	EA	WALL STOP	WS401CVX	626	IVE

HW SET: 03

DOOR NUMBER:
S-203B S-203C

EACH TO HAVE:

3	EA	HINGE	5BB1 4.5 X 4.5	652	IVE
1	EA	CLASSROOM LOCK	ML2055 LWA X1-67	630	C-R
1	EA	SURFACE CLOSER	4111 EDA X TB	689	LCN
1	EA	KICK PLATE	8400 10" X 1-1/2" LTDW B3E	630	IVE
1	EA	WALL STOP	WS401CVX	626	IVE
1	EA	MAGNETIC HOLD-OPEN	SEM 7850 24V	AL	LCN

HW SET: 04

DOOR NUMBER:
S-208 S-212

EACH TO HAVE:

3	EA	HINGE	5BB1 4.5 X 4.5	652	IVE
1	EA	PRIV DBLT W/SIM RETR	ML2030 LWA	630	C-R
1	EA	SURFACE CLOSER	4011 X TB	689	LCN
1	EA	KICK PLATE	8400 10" X 1-1/2" LTDW B3E	630	IVE
1	EA	WALL STOP	WS401CVX	626	IVE

HW SET: 05

DOOR NUMBER:
S-210

EACH TO HAVE:

3	EA	HINGE	5BB1 4.5 X 4.5	652	IVE
1	EA	CLASSROOM LOCK	ML2055 LWA X1-67	630	C-R
1	EA	SURFACE CLOSER	4111 SPRING-CUSH X TB	VFY	LCN
1	EA	KICK PLATE	8400 10" X 1-1/2" LTDW B3E	630	IVE

HW SET: 06

DOOR NUMBER:
S-328B

EACH TO HAVE:

6	EA	HINGE	5BB1HW 4.5 X 4.5	652	IVE
2	EA	MANUAL FLUSH BOLT	FB258N	626	IVE
1	EA	DUST PROOF STRIKE	DP2	626	IVE

1	EA	CLASSROOM LOCK	ML2055 LWA X1-67	630	C-R
2	EA	SURFACE CLOSER	4111 EDA	689	LCN
2	EA	KICK PLATE	8400 10" X 1" LTDW B3E	630	IVE
2	EA	WALL STOP	WS401CVX	626	IVE
1	SET	SEALS	9550 1/72" 3/86"	AL	NGP

HW SET: 07

DOOR NUMBER:
S-339A

EACH TO HAVE:

6	EA	HINGE	5BB1HW 4.5 X 4.5	652	IVE
1	SET	AUTO FLUSH BOLT	FB31P	630	IVE
1	EA	DUST PROOF STRIKE	DP2	626	IVE
1	EA	CLASSROOM LOCK	ML2055 LWA X1-67	630	C-R
1	EA	COORDINATOR	COR52 X FL20	689	IVE
2	EA	MOUNTING BRACKET	MB2	689	IVE
2	EA	SURFACE CLOSER	4111 EDA	689	LCN
2	EA	KICK PLATE	8400 10" X 1" LTDW B3E	630	IVE
2	EA	WALL STOP	WS401CVX	626	IVE
1	SET	SEALS	9550 1/72" 3/86"	AL	NGP

HW SET: A01

DOOR NUMBER:
B-113 B-114 B-115 L-113 L-114 L-115

EACH TO HAVE:

2	EA	CONTINUOUS HINGE	SL11 HD	628	SEL
1	SET	AUTO FLUSH BOLT	FB31P	630	IVE
1	EA	DUST PROOF STRIKE	DP1	626	IVE
1	EA	STOREROOM LOCK	ML2057 LWA X1-67A2 X M30	630	C-R
1	EA	FLUSH PULL	1111A	630	TRI
1	EA	COORDINATOR	COR X FL	628	IVE
2	EA	MOUNTING BRACKET	MB2	689	IVE
2	EA	SURFACE CLOSER	4111 EDA X ST3447 X 4110-30-61 X SRI	689	LCN
2	EA	OVERHEAD HOLDER	814H	630	GLY
1	EA	THRESHOLD	424	AL	NGP
2	EA	DOOR SWEEP	C627A	AL	NGP
1	SET	WEATHER SEAL	SUPPLY WITH DOOR AND FRAME ASSEMBLY		

LEVER INSIDE FLUSH PULL AND CYLINDER OUTSIDE

HW SET: A02

DOOR NUMBER:
S-129 S-130

EACH TO HAVE:

1	EA	CONTINUOUS HINGE	SL11 HD	628	SEL
1	EA	CLST/STRM LOCK W/DB	ML2075 LWA X1-67A2	630	C-R
1	EA	SURFACE CLOSER	4111 H-SPRING-CUSH X 4110-30-61	689	LCN
1	EA	KICK PLATE	8400 10" X 1-1/2" LTDW B3E	630	IVE
1	EA	THRESHOLD	896N 36"	AL	NGP
1	SET	WEATHER SEAL	SUPPLY WITH DOOR AND FRAME ASSEMBLY		

HW SET: A03

DOOR NUMBER:
S-203A

EACH TO HAVE:

1	EA	CONTINUOUS HINGE	SL11 HD	628	SEL
1	EA	CLASSROOM LOCK	ML2055 LWA X1-67	630	C-R
1	EA	SURFACE CLOSER	4111 SPRING-CUSH X 4110-30-61	VFY	LCN
1	EA	KICK PLATE	8400 10" X 1" LTDW B3E	630	IVE
1	EA	THRESHOLD	896N 36"	AL	NGP
1	SET	WEATHER SEAL	SUPPLY WITH DOOR AND FRAME ASSEMBLY		

HW SET: A04

DOOR NUMBER:
S-238A

EACH TO HAVE:

1	EA	CONTINUOUS HINGE	SL11 HD	628	SEL
1	EA	PANIC DEVICE	2103	630	PRE
1	EA	RIM CYLINDER	3000-200 X1-67	626	C-R
1	EA	FLUSH PULL	1111A	630	TRI
1	EA	SURFACE CLOSER	4111 EDA X 4110-30-61	689	LCN
1	EA	KICK PLATE	8400 10" X 1-1/2" LTDW B3E	630	IVE
1	EA	WALL STOP	WS401CVX	626	IVE
1	EA	THRESHOLD	896N	AL	NGP
1	SET	WEATHER SEAL	SUPPLY WITH DOOR AND FRAME ASSEMBLY		

HW SET: A05

DOOR NUMBER:
S-238B

EACH TO HAVE:

2	EA	CONTINUOUS HINGE	SL11 HD	628	SEL
1	EA	MULLION	KR822	689	PRE
2	EA	PANIC DEVICE	2101	630	PRE
1	EA	MORTISE CYLINDER	1000-114 X1-67	626	C-R
2	EA	FLUSH PULL	1111A	630	TRI
1	EA	SURFACE CLOSER	4111 EDA X 4110-30-61	689	LCN
1	EA	SURFACE CLOSER	4111 EDA X ST3447 X 4110-30-61	689	LCN
1	EA	OVERHEAD STOP	814S	630	GLY
2	EA	KICK PLATE	8400 10" X 1-1/2" LTDW B3E	630	IVE
1	EA	WALL STOP	WS401CVX	626	IVE
1	EA	THRESHOLD	896N	AL	NGP
1	SET	WEATHER SEAL	SUPPLY WITH DOOR AND FRAME ASSEMBLY		

HW SET: A06

DOOR NUMBER:
S-242A

EACH TO HAVE:

2	EA	CONTINUOUS HINGE	SL11 HD	628	SEL
1	EA	MULLION	822	689	PRE
2	EA	PANIC DEVICE	2101	630	PRE
2	EA	FLUSH PULL	1111A	630	TRI
1	EA	SURFACE CLOSER	4111 EDA X 4110-30-61	689	LCN
1	EA	SURFACE CLOSER	4111 EDA X ST3447 X 4110-30-61	689	LCN
1	EA	OVERHEAD STOP	814S	630	GLY
2	EA	KICK PLATE	8400 10" X 1-1/2" LTDW B3E	630	IVE
1	EA	SECURITY FLOOR STOP	FS18S	BLK	IVE
1	EA	THRESHOLD	896N	AL	NGP
1	SET	WEATHER SEAL	SUPPLY WITH DOOR AND FRAME ASSEMBLY		

HW SET: A07

DOOR NUMBER:
S-242B

EACH TO HAVE:

2	EA	CONTINUOUS HINGE	SL11 HD	628	SEL
1	EA	MULLION	KR822	689	PRE
1	EA	PANIC DEVICE	2101	630	PRE
1	EA	PANIC DEVICE	2103	630	PRE
1	EA	MORTISE CYLINDER	1000-114 X1-67	626	C-R
1	EA	RIM CYLINDER	3000-200 X1-67	626	C-R
2	EA	FLUSH PULL	1111A	630	TRI

1	EA	SURFACE CLOSER	4111 EDA X 4110-30-61	689	LCN
1	EA	SURFACE CLOSER	4111 EDA X ST3447 X 4110-30-61	689	LCN
1	EA	OVERHEAD STOP	814S	630	GLY
2	EA	KICK PLATE	8400 10" X 1-1/2" LTDW B3E	630	IVE
1	EA	SECURITY FLOOR STOP	FS18S	BLK	IVE
1	EA	THRESHOLD	896N	AL	NGP
1	SET	WEATHER SEAL	SUPPLY WITH DOOR AND FRAME ASSEMBLY		

HW SET: A08

DOOR NUMBER:
S-242C S-242D

EACH TO HAVE:

2	EA	CONTINUOUS HINGE	SL11 HD	628	SEL
2	EA	PUSH PLATE	8200 4" X 16"	630	IVE
2	EA	PULL PLATE	8303-0 4" X 16"	630	IVE
1	EA	SURFACE CLOSER	4111 EDA X 4110-30-61	689	LCN
1	EA	SURFACE CLOSER	4111 EDA X ST3447 X 4110-30-61	689	LCN
1	EA	OVERHEAD STOP	814S	630	GLY
2	EA	KICK PLATE	8400 10" X 1-1/2" LTDW B3E	630	IVE
1	EA	DOME STOP W/RISER	FS436 X 435	626	IVE

HW SET: A09

DOOR NUMBER:
S-316 S-328A

EACH TO HAVE:

1	EA	CONTINUOUS HINGE	SL11 HD	628	SEL
1	EA	CLST/STRM LOCK W/DB	ML2075 LWA X1-67	630	C-R
1	EA	SURFACE CLOSER	4111 H-SPRING-CUSH X 4110-30-61	689	LCN
1	EA	KICK PLATE	8400 10" X 1" LTDW B3E	630	IVE
1	EA	THRESHOLD	424	AL	NGP
1	EA	DOOR SWEEP	C627A	AL	NGP
1	SET	WEATHER SEAL	SUPPLY WITH DOOR AND FRAME ASSEMBLY		

HW SET: A10

DOOR NUMBER:
S-335

EACH TO HAVE:

1	EA	CONTINUOUS HINGE	SL11 HD	628	SEL
1	EA	STOREROOM LOCK	ML2057 LWA X1-67 X M30	630	C-R
1	EA	FLUSH PULL	1111A	630	TRI
1	EA	SURFACE CLOSER	4111 H-SPRING-CUSH X 4110-30-61	689	LCN
1	EA	THRESHOLD	424	AL	NGP

1	EA	DOOR SWEEP	C627A	AL	NGP
1	SET	WEATHER SEAL	SUPPLY WITH DOOR AND FRAME ASSEMBLY		

LEVER INSIDE FLUSH PULL AND CYLINDER OUTSIDE

HW SET: A11

DOOR NUMBER:
S-339B S-402 S-406 S-436

EACH TO HAVE:

1	EA	CONTINUOUS HINGE	SL11 HD	628	SEL
1	EA	PANIC DEVICE	2103	630	PRE
1	EA	RIM CYLINDER	3000-200 X1-67	626	C-R
1	EA	FLUSH PULL	1111A	630	TRI
1	EA	SURFACE CLOSER	4111 EDA X ST3447 X 4110-18--30-61	689	LCN
1	EA	OVERHEAD STOP	814S	630	GLY
1	EA	KICK PLATE	8400 10" X 1-1/2" LTDW B3E	630	IVE
1	EA	THRESHOLD	896N 36"	AL	NGP
1	SET	WEATHER SEAL	SUPPLY WITH DOOR AND FRAME ASSEMBLY		

HW SET: A12

DOOR NUMBER:
S-411

EACH TO HAVE:

2	EA	CONTINUOUS HINGE	SL11 HD	628	SEL
1	EA	PANIC DEVICE	2101	630	PRE
1	EA	PANIC DEVICE	2103	630	PRE
1	EA	RIM CYLINDER	3000-200 X1-67	626	C-R
2	EA	FLUSH PULL	1111A	630	TRI
2	EA	SURFACE CLOSER	4111 EDA X ST3447 X 4110-30-61	689	LCN
2	EA	OVERHEAD STOP	814S	630	GLY
2	EA	KICK PLATE	8400 10" X 1-1/2" LTDW B3E	630	IVE
1	EA	THRESHOLD	896N	AL	NGP
1	SET	WEATHER SEAL	SUPPLY WITH DOOR AND FRAME ASSEMBLY		

HW SET: A13

DOOR NUMBER:
S-425

EACH TO HAVE:

1	EA	CONTINUOUS HINGE	SL11 HD	628	SEL
1	EA	PANIC DEVICE	2101	630	PRE
1	EA	SURFACE CLOSER	4111 EDA X 4110-30-61 X SRI	689	LCN

1	EA	WALL STOP	WS401CVX	626	IVE
1	EA	THRESHOLD	896N 36"	AL	NGP
1	SET	WEATHER SEAL	SUPPLY WITH DOOR AND FRAME ASSEMBLY		

HW SET: A14

DOOR NUMBER:
S-428

EACH TO HAVE:

1	EA	CONTINUOUS HINGE	SL11 HD	628	SEL
1	EA	PANIC DEVICE	2103	630	PRE
1	EA	RIM CYLINDER	3000-200 X1-67	626	C-R
1	EA	FLUSH PULL	1111A	630	TRI
1	EA	SURFACE CLOSER	4111 EDA X ST3447 X 4110-30-61	689	LCN
1	EA	OVERHEAD STOP	814S	630	GLY
1	EA	KICK PLATE	8400 10" X 1-1/2" LTDW B3E	630	IVE
1	EA	THRESHOLD	896N 36"	AL	NGP
1	SET	WEATHER SEAL	SUPPLY WITH DOOR AND FRAME ASSEMBLY		

HW SET: A15

DOOR NUMBER:
S-432

EACH TO HAVE:

2	EA	CONTINUOUS HINGE	SL11 HD	628	SEL
1	EA	PANIC DEVICE	2101	630	PRE
1	EA	PANIC DEVICE	2103	630	PRE
1	EA	RIM CYLINDER	3000-200 X1-67	626	C-R
2	EA	FLUSH PULL	1111A	630	TRI
2	EA	SURFACE CLOSER	4111 EDA X 4110-30-61	689	LCN
2	EA	KICK PLATE	8400 10" X 1-1/2" LTDW B3E	630	IVE
1	EA	SECURITY FLOOR STOP	FS18S	BLK	IVE
1	EA	WALL STOP	WS401CVX	626	IVE
1	EA	THRESHOLD	896N	AL	NGP
1	SET	WEATHER SEAL	SUPPLY WITH DOOR AND FRAME ASSEMBLY		

END OF SECTION 08710

SECTION 08800
GLAZING

PART 1 - GENERAL

1.1 RELATED DOCUMENTS

A. Drawings and general provisions of the Contract, including General and Supplementary Conditions and Division 1 Specification Sections, apply to this Section.

1.2 SUMMARY

A. This Section includes glazing for the following products and applications, including those specified in other Sections where glazing requirements are specified by reference to this Section:

1. Windows.
2. Doors.
3. Glazed entrances.
4. Storefront framing.

1.3 DEFINITIONS

A. Manufacturers of Glass Products: Firms that produce primary glass, fabricated glass, or both, as defined in referenced glazing publications.

B. Glass Thicknesses: Indicated by thickness designations in millimeters according to ASTM C 1036.

C. Interspace: Space between lites of an insulating-glass unit that contains dehydrated air or a specified gas.

D. Deterioration of Coated Glass: Defects developed from normal use that are attributed to the manufacturing process and not to causes other than glass breakage and practices for maintaining and cleaning coated glass contrary to manufacturer's written instructions. Defects include peeling, cracking, and other indications of deterioration in metallic coating.

E. Deterioration of Insulating Glass: Failure of hermetic seal under normal use that is attributed to the manufacturing process and not to causes other than glass breakage and practices for maintaining and cleaning insulating glass contrary to manufacturer's written instructions. Evidence of failure is the obstruction of vision by dust, moisture, or film on interior surfaces of glass.

1.4 PERFORMANCE REQUIREMENTS

A. General: Provide glazing systems capable of withstanding normal thermal movement and wind and impact loads (where applicable) without failure, including loss or glass breakage attributable to the following: defective manufacture, fabrication, and installation; failure of sealants or gaskets to remain watertight and airtight; deterioration of glazing materials; or other defects in construction.

B. Glass Design: Glass thickness designations indicated are minimums and are for detailing only. Confirm glass thicknesses by analyzing Project loads and in-service conditions. Provide glass lites in the thickness designations indicated for various size openings, but not less than thicknesses and in strengths (annealed or heat treated) required to meet or exceed the following criteria:

1. Glass Thicknesses: Select minimum glass thicknesses to comply with ASTM E 1300, according to the following requirements:

a. Design Wind Loads: Determine design wind loads applicable to Project from basic wind speed indicated in miles per hour at 33 feet above grade, according to ASCE 7, "Minimum Design Loads for Buildings and Other Structures": Section 6.5, "Method 2-Analytical Procedure," based on mean roof heights above grade indicated on Drawings.

b. Probability of Breakage for Vertical Glazing: 8 lites per 1000 for lites set vertically or not more than 15 degrees off vertical and under wind action.

1) Load Duration: 60 seconds or less.

c. Maximum Lateral Deflection: For the following types of glass supported on all 4 edges, provide thickness required that limits center deflection at design wind pressure to 1/50 times the short side length or 1 inch, whichever is less.

1) For monolithic-glass lites heat treated to resist wind loads.
2) For insulating glass.

d. Minimum Glass Thickness for Exterior Lites: Not less than 6.0 mm.

e. Thickness of Tinted and Heat-Absorbing Glass: Provide the same thickness for each tint color indicated throughout Project.

C. Thermal Movements: Provide glazing that allows for thermal movements resulting from the following maximum change (range) in ambient and surface temperatures acting on glass framing members and glazing components. Base engineering calculation on surface temperatures of materials due to both solar heat gain and nighttime-sky heat loss.

1. Temperature Change (Range): 120 deg F, ambient; 180 deg F, material surfaces.

D. Thermal and Optical Performance Properties: Provide glass with performance properties specified based on manufacturer's published test data, as determined according to procedures indicated below:

1. For insulating-glass units, properties are based on units of thickness indicated for overall unit and for each lite.

1.5 SUBMITTALS

A. Product Data: For each glass product and glazing material indicated.

B. Samples: For the following products, in the form of 12-inch- square Samples for glass.

1. Each color of tinted float glass.
2. Ceramic-coated spandrel glass.
3. Fire-resistive glazing products.
4. Insulating glass for each designation indicated.

C. Product Certificates: Signed by manufacturers of glass and glazing products certifying that products furnished comply with requirements.

1. For solar-control low-e-coated glass, provide documentation demonstrating that manufacturer of coated glass is certified by coating manufacturer.

D. Warranties: Special warranties specified in this Section.

1.6 QUALITY ASSURANCE

A. Installer Qualifications: An experienced installer who has completed glazing similar in material, design, and extent to that indicated for this Project; whose work has resulted in glass installations with a record of successful in-service performance; and who employs glass installers for this Project who are certified under the National Glass Association's Certified Glass Installer Program.

B. Source Limitations for Glass: Obtain the following through one source from a single manufacturer for each glass type: clear float glass, coated float glass and insulating glass.

C. Source Limitations for Glass Sputter-Coated with Solar-Control Low-E Coatings: Where solar-control low-e coatings of a primary glass manufacturer that has established a certified fabricator program is specified, obtain sputter-coated solar-control low-e-coated glass in fabricated units from a manufacturer that is certified by coated-glass manufacturer.

D. Source Limitations for Glazing Accessories: Obtain glazing accessories through one source from a single manufacturer for each product and installation method indicated.

E. Glazing for Fire-Rated Door Assemblies: Glazing for assemblies that comply with NFPA 80 and that are listed and labeled by a testing and inspecting agency acceptable to authorities having jurisdiction, for fire-protection ratings indicated, based on testing according to NFPA 252.

F. Glazing for Fire-Rated Window Assemblies: Glazing for assemblies that comply with NFPA 80 and that are listed and labeled by a testing and inspecting agency acceptable to authorities having jurisdiction, for fire ratings indicated, based on testing according to NFPA 257.

G. Safety Glazing Products: Comply with testing requirements in 16 CFR 1201.

1. Subject to compliance with requirements, obtain safety glazing products permanently marked with certification label of the Safety Glazing Certification Council or another certification agency or manufacturer acceptable to authorities having jurisdiction.

2. Where glazing units, including Kind FT glass and laminated glass, are specified in Part 2 articles for glazing lites more than 9 sq. ft. in exposed surface area of one side, provide glazing products that comply with Category II materials, for lites 9 sq. ft. or less in exposed surface area of one side, provide glazing products that comply with Category I or II materials, except for hazardous locations where Category II materials are required by 16 CFR 1201 and regulations of authorities having jurisdiction.

H. Glazing Publications: Comply with published recommendations of glass product manufacturers and organizations below, unless more stringent requirements are indicated. Refer to these publications for glazing terms not otherwise defined in this Section or in referenced standards.

1. IGMA Publication for Insulating Glass: SIGMA TM-3000, "Glazing Guidelines for Sealed Insulating Glass Units."

1.7 DELIVERY, STORAGE, AND HANDLING

A. Protect glazing materials according to manufacturer's written instructions and as needed to prevent damage to glass and glazing materials from condensation, temperature changes, direct exposure to sun, or other causes.

B. For insulating-glass units that will be exposed to substantial altitude changes, comply with insulating-glass manufacturer's written recommendations for venting and sealing to avoid hermetic seal ruptures.

1.8 PROJECT CONDITIONS

A. Environmental Limitations: Do not proceed with glazing when ambient and substrate temperature conditions are outside limits permitted by glazing material manufacturers and when glazing channel substrates are wet from rain, frost, condensation, or other causes.

1.9 WARRANTY

A. Manufacturer's Special Warranty on Insulating Glass: Manufacturer's standard form, made out to Owner and signed by insulating-glass manufacturer agreeing to replace insulating-glass units that deteriorate as defined in "Definitions" Article, f.o.b. the nearest shipping point to Project site, within specified warranty period indicated below.

1. Warranty Period: 10 years from date of Substantial Completion.

PART 2 - PRODUCTS

2.1 MANUFACTURERS

A. In other Part 2 articles where titles below introduce lists, the following requirements apply to product selection:

1. Available Products: Subject to compliance with requirements, products that may be incorporated into the Work include, but are not limited to, products specified.

2.2 GLASS PRODUCTS

A. Annealed Float Glass: ASTM C 1036, Type I (transparent flat glass), Quality-Q3; of class indicated.

B. Heat-Treated Float Glass: ASTM C 1048; Type I (transparent flat glass); Quality-Q3; of class, kind, and condition indicated.

1. Provide Kind HS (heat-strengthened) float glass in place of annealed float glass where needed to resist thermal stresses induced by differential shading of individual glass lites and to comply with glass design requirements specified in Part 1 "Performance Requirements" Article.
2. For uncoated glass, comply with requirements for Condition A.
3. For coated vision glass, comply with requirements for Condition C (other uncoated glass).
4. Provide Kind FT (fully tempered) float glass in place of annealed or Kind HS (heat-strengthened) float glass where safety glass is indicated.

C. Insulating-Glass Units, General: Factory-assembled units consisting of sealed lites of glass separated by a dehydrated interspace, and complying with ASTM E 774 for Class CBA units and with requirements specified in this Article and in Part 2 "Insulating-Glass Units" Article.

1. Provide Kind HS (heat-strengthened) float glass in place of annealed glass where needed to resist thermal stresses induced by differential shading of individual glass lites and to comply with glass design requirements specified in Part 1 "Performance Requirements" Article.
2. Provide Kind FT (fully tempered) glass lites where safety glass is indicated.
3. Overall Unit Thickness and Thickness of Each Lite: Dimensions indicated for insulating-glass units are nominal and the overall thicknesses of units are measured perpendicularly from outer surfaces of glass lites at unit's edge.
4. Sealing System: Dual seal, with primary and secondary sealants as follows:

    a. Manufacturer's standard sealants.

5. Spacer Specifications: Manufacturer's standard spacer material and construction.

2.3 FIRE-RATED GLAZING PRODUCTS

A. Monolithic Ceramic Glazing Material: Proprietary product in the form of clear flat sheets of 3/16-inch nominal thickness weighing 2.5 lb/sq. ft., and as follows:

1. Fire-Protection Rating: As indicated for the fire window in which glazing material is installed, and permanently labeled by a testing and inspecting agency acceptable to authorities having jurisdiction.

B. Laminated Ceramic Glazing Material: Proprietary Category II safety glazing product in the form of 2 lites of clear ceramic glazing material laminated together to produce a laminated lite of 5/16-inch nominal thickness; polished on both surfaces; weighing 4 lb/sq. ft.; and as follows:

1. Fire-Protection Rating: As indicated for the assembly in which glazing material is installed, and permanently labeled by a testing and inspecting agency acceptable to authorities having jurisdiction.
2. Polished on both surfaces, transparent.

C. Specially Tempered Monolithic Glass: Proprietary Category II safety glazing product in the form of a specially tempered 1/4-inch- thick monolithic lite, and as follows:

1. Fire-Protection Rating: 20 minutes, and permanently labeled by a testing and inspecting agency acceptable to authorities having jurisdiction.

2.4 GLAZING GASKETS

A. Lock-Strip Gaskets: Neoprene extrusions in size and shape indicated, fabricated into frames with molded corner units and zipper lock-strips, complying with ASTM C 542, black.

2.5 MISCELLANEOUS GLAZING MATERIALS

A. General: Provide products of material, size, and shape complying with referenced glazing standard, requirements of manufacturers of glass and other glazing materials for application indicated, and with a proven record of compatibility with surfaces contacted in installation.

B. Cleaners, Primers, and Sealers: Types recommended by sealant or gasket manufacturer.

C. Setting Blocks: Elastomeric material with a Shore, Type A durometer hardness of 85, plus or minus 5.

D. Spacers: Elastomeric blocks or continuous extrusions with a Shore, Type A durometer hardness required by glass manufacturer to maintain glass lites in place for installation indicated.

E. Edge Blocks: Elastomeric material of hardness needed to limit glass lateral movement (side walking).

F. Cylindrical Glazing Sealant Backing: ASTM C 1330, Type O (open-cell material), of size and density to control glazing sealant depth and otherwise produce optimum glazing sealant performance.

G. Perimeter Insulation for Fire-Resistive Glazing: Identical to product used in test assembly to obtain fire-resistance rating.

2.6 FABRICATION OF GLAZING UNITS

A. Fabricate glazing units in sizes required to glaze openings indicated for Project, with edge and face clearances, edge and surface conditions, and bite complying with written instructions of product manufacturer and referenced glazing publications, to comply with system performance requirements.

2.7 MONOLITHIC FLOAT-GLASS UNITS

A. Uncoated Clear Float-Glass Units: Class 1 (clear) Kind FT (fully tempered) float glass.

2.8 INSULATING-GLASS UNITS

A. Passive Solar Low-E Insulating-Glass Units:

1. Overall Unit Thickness and Thickness of Each Lite: 1".
2. Interspace Content: Air.
3. Outdoor Lite: Class 1 (clear) float glass.

    a. Kind HS (heat strengthened) or Kind FT (fully tempered) as required for location.

4. Indoor Lite: Class 1 (clear) float glass.

    a. Kind HS (heat strengthened) or Kind FT (fully tempered) as required for location.

5. Low-E Coating: Pyrolytic or sputtered on second or third surface.

2.9 METAL-FACED INSULATED COMPOSITE PANELS

A. General: Provide factory formed and assembled metal faced insulated composite panels fabricated from two metal facings bonded to insulated core; formed into profile for installation method indicated. Include attachment system components and accessories required for weathertight system.

1. Available Manufacturers:

    a. Citadel Architectural Products.
    b. Laminators, Inc.
    c. Mapes Architectural Products.

B. Aluminum-Faced Composite Wall Panels: Formed with 0.032 inch thick, painted aluminum sheet facings.

1. Panel Thickness: 1"
2. Core: Standard.
3. Exterior Finish: Kynar 500 on aluminum with 20 year finish warranty.

    a. Exterior Color: Match laminators color "Sandstone".
    b. Interior Color: As selected from manufacturer's full range of colors.

4. Surface: Smooth/flat.

C. Attachment System Components: Glazed in window frame.

PART 3 - EXECUTION

3.1 EXAMINATION

A. Examine framing glazing, with Installer present, for compliance with the following:

1. Manufacturing and installation tolerances, including those for size, squareness, and offsets at corners.

2. Presence and functioning of weep system.
3. Minimum required face or edge clearances.
4. Effective sealing between joints of glass-framing members.

B. Proceed with installation only after unsatisfactory conditions have been corrected.

3.2 PREPARATION

A. Clean glazing channels and other framing members receiving glass immediately before glazing. Remove coatings not firmly bonded to substrates.

3.3 GLAZING, GENERAL

A. Comply with combined written instructions of manufacturers of glass, sealants, gaskets, and other glazing materials, unless more stringent requirements are indicated, including those in referenced glazing publications.

B. Glazing channel dimensions, as indicated on Drawings, provide necessary bite on glass, minimum edge and face clearances, and adequate sealant thicknesses, with reasonable tolerances. Adjust as required by Project conditions during installation.

C. Protect glass edges from damage during handling and installation. Remove damaged glass from Project site and legally dispose of off Project site. Damaged glass is glass with edge damage or other imperfections that, when installed, could weaken glass and impair performance and appearance.

D. Install setting blocks in sill rabbets, sized and located to comply with referenced glazing publications, unless otherwise required by glass manufacturer. Set blocks in thin course of compatible sealant suitable for heel bead.

E. Do not exceed edge pressures stipulated by glass manufacturers for installing glass lites.

F. Provide spacers for glass lites where length plus width is larger than 50 inches as follows:

1. Locate spacers directly opposite each other on both inside and outside faces of glass. Install correct size and spacing to preserve required face clearances, unless gaskets and glazing tapes are used that have demonstrated ability to maintain required face clearances and to comply with system performance requirements.
2. Provide 1/8-inch minimum bite of spacers on glass and use thickness equal to sealant width. With glazing tape, use thickness slightly less than final compressed thickness of tape.

G. Provide edge blocking where indicated or needed to prevent glass lites from moving sideways in glazing channel, as recommended in writing by glass manufacturer and according to requirements in referenced glazing publications.

H. Set glass lites in each series with uniform pattern, draw, bow, and similar characteristics.

3.4 GASKET GLAZING (DRY)

A. Fabricate compression gaskets in lengths recommended by gasket manufacturer to fit openings exactly, with allowance for stretch during installation.

B. Install gaskets so they protrude past face of glazing stops.

3.5 LOCK-STRIP GASKET GLAZING

A. Comply with ASTM C 716 and gasket manufacturer's written instructions. Provide supplementary wet seal and weep system, unless otherwise indicated.

3.6 CLEANING AND PROTECTION

A. Protect exterior glass from damage immediately after installation by attaching crossed streamers to framing held away from glass. Do not apply markers to glass surface. Remove nonpermanent labels, and clean surfaces.

B. Protect glass from contact with contaminating substances resulting from construction operations, including weld splatter. If, despite such protection, contaminating substances do come into contact with glass, remove substances immediately as recommended by glass manufacturer.

C. Examine glass surfaces adjacent to or below exterior concrete and other masonry surfaces at frequent intervals during construction, but not less than once a month, for buildup of dirt, scum, alkaline deposits, or stains; remove as recommended in writing by glass manufacturer.

D. Remove and replace glass that is broken, chipped, cracked, or abraded or that is damaged from natural causes, accidents, and vandalism, during construction period.

E. Wash glass on both exposed surfaces in each area of Project not more than four days before date scheduled for inspections that establish date of Substantial Completion. Wash glass as recommended in writing by glass manufacturer.

END OF SECTION 08800

SECTION 09111
NON-LOAD-BEARING STEEL FRAMING

PART 1 - GENERAL

1.1 RELATED DOCUMENTS

A. Drawings and general provisions of the Contract, including General and Supplementary Conditions and Division 1 Specification Sections, apply to this Section.

1.2 SUMMARY

A. This Section includes non-load-bearing steel framing members for the following applications:

1. Interior framing systems (e.g., supports for partition walls, framed soffits, furring, etc.).
2. Interior suspension systems (e.g., supports for ceilings, suspended soffits, etc.).

B. Related Sections include the following:

1. Division 5 Section "Cold-Formed Metal Framing" for exterior and interior load-bearing and exterior non-load-bearing wall studs; floor joists; roof rafters and ceiling joists; and roof trusses.
2. Division 7 Section "Building Insulation" for insulation installed with Z-shaped furring members.

1.3 SUBMITTALS

A. Product Data: For each type of product indicated.

1.4 QUALITY ASSURANCE

A. Fire-Test-Response Characteristics: For fire-resistance-rated assemblies that incorporate non-load-bearing steel framing, provide materials and construction identical to those tested in assembly indicated according to ASTM E 119 by an independent testing agency.

B. STC-Rated Assemblies: For STC-rated assemblies, provide materials and construction identical to those tested in assembly indicated according to ASTM E 90 and classified according to ASTM E 413 by an independent testing agency.

PART 2 - PRODUCTS

2.1 NON-LOAD-BEARING STEEL FRAMING, GENERAL

A. Framing Members, General: Comply with ASTM C 754 for conditions indicated.

1. Steel Sheet Components: Comply with ASTM C 645 requirements for metal, unless otherwise indicated.
2. Protective Coating: manufacturer's standard corrosion-resistant zinc coating, unless otherwise indicated.

2.2 SUSPENSION SYSTEM COMPONENTS

A. Tie Wire: ASTM A 641/A 641M, Class 1 zinc coating, soft temper, 0.0625-inch- diameter wire, or double strand of 0.0475-inch- diameter wire.

B. Hanger Attachments to Concrete:

1. Anchors: Fabricated from corrosion-resistant materials with holes or loops for attaching wire hangers and capable of sustaining, without failure, a load equal to 5 times that imposed by construction as determined by testing according to ASTM E 488 by an independent testing agency.

a. Type: Postinstalled, chemical anchor.

C. Wire Hangers: ASTM A 641/A 641M, Class 1 zinc coating, soft temper, 0.162-inch diameter.

D. Furring Channels (Furring Members):

1. Cold-Rolled Channels: 0.0538-inch bare-steel thickness, with minimum 1/2-inch- wide flanges, 3/4 inch deep.
2. Steel Studs: ASTM C 645.

a. Minimum Base-Metal Thickness: 0.0312 inch.
b. Depth: 3-5/8 inches.

3. Hat-Shaped, Rigid Furring Channels: ASTM C 645, 7/8 inch deep.

a. Minimum Base Metal Thickness: 0.0312 inch.

E. Grid Suspension System for Ceilings: ASTM C 645, direct-hung system composed of main beams and cross-furring members that interlock.

1. Products: Subject to compliance with requirements, provide one of the following:

a. Armstrong World Industries, Inc.; Drywall Grid Systems.
b. USG Corporation; Drywall Suspension System.

2.3 STEEL FRAMING FOR FRAMED ASSEMBLIES

A. Steel Studs and Runners: ASTM C 645.

1. Minimum Base-Metal Thickness: 0.0312 inch.

B. Slip-Type Head Joints: Where indicated, provide one of the following:

1. Single Long-Leg Runner System: ASTM C 645 top runner with 2-inch- deep flanges in thickness not less than indicated for studs, installed with studs friction fit into top runner and with continuous bridging located within 12 inches of the top of studs to provide lateral bracing.
2. Double-Runner System: ASTM C 645 top runners, inside runner with 2-inch- deep flanges in thickness not less than indicated for studs and fastened to studs, and outer runner sized to friction fit inside runner.

C. Firestop Track: As specified in Division 7 Section "Fire-Resistive Joint Systems."

D. Flat Strap and Backing Plate: Steel sheet for blocking and bracing in length and width indicated.

1. Minimum Base-Metal Thickness: 0.0179 inch.

E. Hat-Shaped, Rigid Furring Channels: ASTM C 645.

1. Minimum Base Metal Thickness: 0.0312 inch.
2. Depth: 1-1/2 inches.

2.4 AUXILIARY MATERIALS

A. General: Provide auxiliary materials that comply with referenced installation standards.

1. Fasteners for Metal Framing: Of type, material, size, corrosion resistance, holding power, and other properties required to fasten steel members to substrates.

B. Isolation Strip at Exterior Walls: Provide one of the following:

1. Asphalt-Saturated Organic Felt: ASTM D 226, Type I (No. 15 asphalt felt), nonperforated.
2. Foam Gasket: Adhesive-backed, closed-cell vinyl foam strips that allow fastener penetration without foam displacement, 1/8 inch thick, in width to suit steel stud size.

PART 3 - EXECUTION

3.1 EXAMINATION

A. Examine areas and substrates, with Installer present, and including welded hollow-metal frames, cast-in anchors, and structural framing, for compliance with requirements and other conditions affecting performance.

1. Proceed with installation only after unsatisfactory conditions have been corrected.

3.2 PREPARATION

A. Suspended Assemblies: Coordinate installation of suspension systems with installation of overhead structure to ensure that inserts and other provisions for anchorages to building structure have been installed to receive hangers at spacing required to support the Work and that hangers will develop their full strength.

1. Furnish concrete inserts and other devices indicated to other trades for installation in advance of time needed for coordination and construction.

3.3 INSTALLATION, GENERAL

A. Installation Standard: ASTM C 754.

1. Gypsum Board Assemblies: Also comply with requirements in ASTM C 840 that apply to framing installation.

B. Install supplementary framing, and blocking to support fixtures, equipment services, heavy trim, grab bars, toilet accessories, furnishings, or similar construction.

C. Install bracing at terminations in assemblies.

D. Do not bridge building control and expansion joints with non-load-bearing steel framing members. Frame both sides of joints independently.

3.4 INSTALLING SUSPENSION SYSTEMS

A. Install suspension system components in sizes and spacings indicated on Drawings, but not less than those required by referenced installation standards for assembly types and other assembly components indicated.

B. Isolate suspension systems from building structure where they abut or are penetrated by building structure to prevent transfer of loading imposed by structural movement.

C. Suspend hangers from building structure as follows:

1. Install hangers plumb and free from contact with insulation or other objects within ceiling plenum that are not part of supporting structural or suspension system.

a. Splay hangers only where required to miss obstructions and offset resulting horizontal forces by bracing, countersplaying, or other equally effective means.

2. Where width of ducts and other construction within ceiling plenum produces hanger spacings that interfere with locations of hangers required to support standard suspension system members, install supplemental suspension members and hangers in the form of trapezes or equivalent devices.

a. Size supplemental suspension members and hangers to support ceiling loads within performance limits established by referenced installation standards.

3. Wire Hangers: Secure by looping and wire tying, either directly to structures or to inserts, eye screws, or other devices and fasteners that are secure and appropriate for substrate, and in a manner that will not cause hangers to deteriorate or otherwise fail.
4. Do not connect or suspend steel framing from ducts, pipes, or conduit.

D. Grid Suspension Systems: Attach perimeter wall track or angle where grid suspension systems meet vertical surfaces. Mechanically join main beam and cross-furring members to each other and butt-cut to fit into wall track.

E. Installation Tolerances: Install suspension systems that are level to within 1/8 inch in 12 feet measured lengthwise on each member that will receive finishes and transversely between parallel members that will receive finishes.

3.5 INSTALLING FRAMED ASSEMBLIES

A. Where studs are installed directly against exterior masonry walls or dissimilar metals at exterior walls, install isolation strip between studs and exterior wall.

B. Install studs so flanges within framing system point in same direction.

C. Install tracks (runners) at floors and overhead supports. Extend framing full height to structural supports or substrates above suspended ceilings, except where partitions are indicated to terminate at suspended ceilings. Continue framing around ducts penetrating partitions above ceiling.

1. Slip-Type Head Joints: Where framing extends to overhead structural supports, install to produce joints at tops of framing systems that prevent axial loading of finished assemblies.
2. Door Openings: Screw vertical studs at jambs to jamb anchor clips on door frames; install runner track section (for cripple studs) at head and secure to jamb studs.

    a. Install two studs at each jamb, unless otherwise indicated.
    b. Install cripple studs at head adjacent to each jamb stud, with a minimum 1/2-inch clearance from jamb stud to allow for installation of control joint in finished assembly.
    c. Extend jamb studs through suspended ceilings and attach to underside of overhead structure.

3. Other Framed Openings: Frame openings other than door openings the same as required for door openings, unless otherwise indicated. Install framing below sills of openings to match framing required above door heads.
4. Fire-Resistance-Rated Partitions: Install framing to comply with fire-resistance-rated assembly indicated and support closures and to make partitions continuous from floor to underside of solid structure.

    a. Firestop Track: Where indicated, install to maintain continuity of fire-resistance-rated assembly indicated.

5. Sound-Rated Partitions: Install framing to comply with sound-rated assembly indicated.

D. Direct Furring:

1. Attach to concrete or masonry with stub nails, screws designed for masonry attachment, or powder-driven fasteners spaced 24 inches o.c.

E. Z-Furring Members:

1. Erect insulation (specified in Division 7 Section "Building Insulation") vertically and hold in place with Z-furring members spaced 24 inches o.c.
2. Except at exterior corners, securely attach narrow flanges of furring members to wall with concrete stub nails, screws designed for masonry attachment, or powder-driven fasteners spaced 24 inches o.c.
3. At exterior corners, attach wide flange of furring members to wall with short flange extending beyond corner; on adjacent wall surface, screw-attach short flange of furring channel to web of attached channel. At interior corners, space second member no more than 12 inches from corner and cut insulation to fit.

F. Installation Tolerance: Install each framing member so fastening surfaces vary not more than 1/8 inch from the plane formed by faces of adjacent framing.

END OF SECTION 09111

SECTION 09250
GYPSUM BOARD

PART 1 - GENERAL

1.1 RELATED DOCUMENTS

A. Drawings and general provisions of the Contract, including General and Supplementary Conditions and Division 01 Specification Sections, apply to this Section.

1.2 SUMMARY

A. This Section includes the following:

1. Interior gypsum board.

B. Related Sections include the following:

1. Division 05 Section "Cold-Formed Metal Framing" for load-bearing steel framing that supports gypsum board.
2. Division 07 Section "Thermal Insulation" for insulation and vapor retarders installed in assemblies that incorporate gypsum board.
3. Division 07 Section "Fire-Resistive Joint Systems" for head-of-wall assemblies that incorporate gypsum board.
4. Division 09 Section "Non-Structural Metal Framing" for non-structural framing and suspension systems that support gypsum board.
5. Division 09 painting Sections for primers applied to gypsum board surfaces.

1.3 SUBMITTALS

A. Product Data: For each type of product indicated.

1.4 QUALITY ASSURANCE

A. Fire-Resistance-Rated Assemblies: For fire-resistance-rated assemblies, provide materials and construction identical to those tested in assembly indicated according to ASTM E 119 by an independent testing agency.

1.5 STORAGE AND HANDLING

A. Store materials inside under cover and keep them dry and protected against damage from weather, condensation, direct sunlight, construction traffic, and other causes. Stack panels flat to prevent sagging.

1.6 PROJECT CONDITIONS

A. Environmental Limitations: Comply with ASTM C 840 requirements or gypsum board manufacturer's written recommendations, whichever are more stringent.

B. Do not install interior products until installation areas are enclosed and conditioned.

C. Do not install panels that are wet, those that are moisture damaged, and those that are mold damaged.

1. Indications that panels are wet or moisture damaged include, but are not limited to, discoloration, sagging, or irregular shape.
2. Indications that panels are mold damaged include, but are not limited to, fuzzy or splotchy surface contamination and discoloration.

PART 2 - PRODUCTS

2.1 PANELS, GENERAL

A. Size: Provide in maximum lengths and widths available that will minimize joints in each area and that correspond with support system indicated.

2.2 INTERIOR GYPSUM BOARD

A. General: Complying with ASTM C 36/C 36M or ASTM C 1396/C 1396M, as applicable to type of gypsum board indicated and whichever is more stringent.

1. Available Manufacturers: Subject to compliance with requirements, manufacturers offering products that may be incorporated into the Work include, but are not limited to, the following:

a. American Gypsum Co.
b. G-P Gypsum.
c. National Gypsum Company.
d. USG Corporation.

B. Type X:

1. Thickness: 5/8 inch.
2. Long Edges: Tapered.

C. Ceiling Type: Manufactured to have more sag resistance than regular-type gypsum board.

1. Thickness: 1/2 inch.
2. Long Edges: Tapered.

D. Abuse-Resistant Type: Manufactured to produce greater resistance to surface indentation, through-penetration (impact resistance), and abrasion than standard, regular-type and Type X gypsum board. 5/8 inch, Type X

1. Long Edges: Tapered.

E. High-Impact Type: Manufactured with Type X core, fiberglass mesh laminated to back side for greater resistance to through-penetration (impact resistance).

1. Core: 5/8 inch thick.
2. National Gypsum Hi-Impact XP Level 3-Heavy Duty.

F. Moisture and Mold-Resistant Type: With moisture and mold-resistant core and surfaces.

1. Core: 5/8 inch thick, Type X.
2. Long Edges: Tapered.

2.3 TRIM ACCESSORIES

A. Interior Trim: ASTM C 1047.

1. Material: Paper-faced galvanized steel sheet.
2. Shapes:

a. Cornerbead.
b. Bullnose bead.
c. LC-Bead: J-shaped; exposed long flange receives joint compound.
d. L-Bead: L-shaped; exposed long flange receives joint compound.
e. U-Bead: J-shaped; exposed short flange does not receive joint compound.
f. Expansion (control) joint.

2.4 JOINT TREATMENT MATERIALS

A. General: Comply with ASTM C 475/C 475M.

B. Joint Tape:

1. Interior Gypsum Wallboard: Paper.
2. Tile Backing Panels: As recommended by panel manufacturer.
3. Glass-Mat Gypsum Sheathing Board: 10 by 10 glass mesh.

C. Joint Compound for Interior Gypsum Wallboard: For each coat use formulation that is compatible with other compounds applied on previous or for successive coats.

1. Prefilling: At open joints, rounded or beveled panel edges, and damaged surface areas, use setting-type taping compound.
2. Embedding and First Coat: For embedding tape and first coat on joints, fasteners, and trim flanges, use drying-type, all-purpose compound.

    a. Use setting-type compound for installing paper-faced metal trim accessories.

3. Fill Coat: For second coat, use drying-type, all-purpose compound.
4. Finish Coat: For third coat, use drying-type, all-purpose compound.

2.5 AUXILIARY MATERIALS

A. General: Provide auxiliary materials that comply with referenced installation standards and manufacturer's written recommendations.

B. Laminating Adhesive: Adhesive or joint compound recommended for directly adhering gypsum panels to continuous substrate.

1. Use adhesives that have a VOC content of 50 g/L or less when calculated according to 40 CFR 59, Subpart D (EPA Method 24).

C. Steel Drill Screws: ASTM C 1002, unless otherwise indicated.

1. Use screws complying with ASTM C 954 for fastening panels to steel members from 0.033 to 0.112 inch thick.
2. For fastening cementitious backer units, use screws of type and size recommended by panel manufacturer.

D. Sound Attenuation Blankets: ASTM C 665, Type I (blankets without membrane facing) produced by combining thermosetting resins with mineral fibers manufactured from glass, slag wool, or rock wool.

1. Fire-Resistance-Rated Assemblies: Comply with mineral-fiber requirements of assembly.

E. Acoustical Sealant: As specified in Division 07 Section "Joint Sealants."

PART 3 - EXECUTION

3.1 EXAMINATION

A. Examine areas and substrates, with Installer present, and including welded hollow-metal frames and framing, for compliance with requirements and other conditions affecting performance.

B. Examine panels before installation. Reject panels that are wet, moisture damaged, and mold damaged.

C. Proceed with installation only after unsatisfactory conditions have been corrected.

3.2 APPLYING AND FINISHING PANELS, GENERAL

A. Comply with ASTM C 840.

B. Install ceiling panels across framing to minimize the number of abutting end joints and to avoid abutting end joints in central area of each ceiling. Stagger abutting end joints of adjacent panels not less than one framing member.

C. Install panels with face side out. Butt panels together for a light contact at edges and ends with not more than 1/16 inch of open space between panels. Do not force into place.

D. Locate edge and end joints over supports, except in ceiling applications where intermediate supports or gypsum board back-blocking is provided behind end joints. Do not place tapered edges against cut edges or ends. Stagger vertical joints on opposite sides of partitions. Do not make joints other than control joints at corners of framed openings.

E. Form control and expansion joints with space between edges of adjoining gypsum panels.

F. Cover both faces of support framing with gypsum panels in concealed spaces (above ceilings, etc.), except in chases braced internally.

1. Unless concealed application is indicated or required for sound, fire, air, or smoke ratings, coverage may be accomplished with scraps of not less than 8 sq. ft. in area.
2. Fit gypsum panels around ducts, pipes, and conduits.
3. Where partitions intersect structural members projecting below underside of floor/roof slabs and decks, cut gypsum panels to fit profile formed by structural members; allow 1/4- to 3/8-inch- wide joints to install sealant.

G. Isolate perimeter of gypsum board applied to non-load-bearing partitions at structural abutments, except floors. Provide 1/4- to 1/2-inch- wide spaces at these locations, and trim edges with edge trim where edges of panels are exposed. Seal joints between edges and abutting structural surfaces with acoustical sealant.

H. Attachment to Steel Framing: Attach panels so leading edge or end of each panel is attached to open (unsupported) edges of stud flanges first.

3.3 APPLYING INTERIOR GYPSUM BOARD

A. Install interior gypsum board in the following locations:

1. Type X: Vertical surfaces, unless otherwise indicated.
2. Ceiling Type: Ceiling surfaces unless noted as fire rated.
3. Abuse-Resistant Type: All studwall in classrooms from floor to 8'-0" above floor.
4. High-Impact Type: Corridor, shop and storage room walls from floor to 4'-0" above finished floor with abuse-resistant board from 4'-0" to 8'-0" A.F.F.

B. Single-Layer Application:

1. On ceilings, apply gypsum panels before wall/partition board application to greatest extent possible and at right angles to framing, unless otherwise indicated.

2. On partitions/walls, apply gypsum panels horizontally (perpendicular to framing), unless otherwise indicated or required by fire-resistance-rated assembly, and minimize end joints.

    a. Stagger abutting end joints not less than one framing member in alternate courses of panels.
    b. At stairwells and other high walls, install panels horizontally, unless otherwise indicated or required by fire-resistance-rated assembly.

3. On Z-furring members, apply gypsum panels vertically (parallel to framing) with no end joints. Locate edge joints over furring members.
4. Fastening Methods: Apply gypsum panels to supports with steel drill screws.

C. Laminating to Substrate: Where gypsum panels are indicated as directly adhered to a substrate (other than studs, joists, furring members, or base layer of gypsum board), comply with gypsum board manufacturer's written recommendations and temporarily brace or fasten gypsum panels until fastening adhesive has set.

3.4 INSTALLING TRIM ACCESSORIES

A. General: For trim with back flanges intended for fasteners, attach to framing with same fasteners used for panels. Otherwise, attach trim according to manufacturer's written instructions.

B. Control Joints: Install control joints according to ASTM C 840 and in specific locations approved by Architect for visual effect.

C. Interior Trim: Install in the following locations:

1. Cornerbead: Use at outside corners, unless otherwise indicated.
2. LC-Bead: Use at exposed panel edges.
3. L-Bead: Use where indicated.
4. U-Bead: Use at exposed panel edges.

3.5 FINISHING GYPSUM BOARD

A. General: Treat gypsum board joints, interior angles, edge trim, control joints, penetrations, fastener heads, surface defects, and elsewhere as required to prepare gypsum board surfaces for decoration. Promptly remove residual joint compound from adjacent surfaces.

B. Prefill open joints, rounded or beveled edges, and damaged surface areas.

C. Apply joint tape over gypsum board joints, except those with trim having flanges not intended for tape.

D. Gypsum Board Finish Levels: Finish panels to levels indicated below and according to ASTM C 840:

1. Level 1: Ceiling plenum areas, concealed areas, and where indicated.
2. Level 2: Panels that are substrate for tile.

3. Level 4: At panel surfaces that will be exposed to view, unless otherwise indicated.

    a. Primer and its application to surfaces are specified in other Division 09 Sections.

3.6 PROTECTION

A. Protect installed products from damage from weather, condensation, direct sunlight, construction, and other causes during remainder of the construction period.

B. Remove and replace panels that are wet, moisture damaged, and mold damaged.

1. Indications that panels are wet or moisture damaged include, but are not limited to, discoloration, sagging, or irregular shape.
2. Indications that panels are mold damaged include, but are not limited to, fuzzy or splotchy surface contamination and discoloration.

END OF SECTION 09250

SECTION 09310
CERAMIC TILE

PART 1 - GENERAL

1.1 RELATED DOCUMENTS

A. Drawings and general provisions of the Contract, including General and Supplementary Conditions and Division 1 Specification Sections, apply to this Section.

1.2 SUMMARY

A. This Section includes the following:

1. Ceramic mosaic tile.
2. Glazed wall tile.
3. Stone thresholds installed as part of tile installations.
4. Waterproof membrane for tile installations.
5. Crack-suppression membrane for thin-set tile installations.
6. Metal edge strips installed as part of tile installations.

B. Related Sections include the following:

1. Division 3 Section "Cast-in-Place Concrete" for monolithic slab finishes specified for tile substrates.
2. Division 7 Section "Joint Sealants" for sealing of expansion, contraction, control, and isolation joints in tile surfaces.
3. Division 9 Section "Gypsum Board Assemblies" for cementitious backer units.

1.3 DEFINITIONS

A. Module Size: Actual tile size (minor facial dimension as measured per ASTM C 499) plus joint width indicated.

B. Facial Dimension: Nominal tile size as defined in ANSI A137.1.

1.4 PERFORMANCE REQUIREMENTS

A. Static Coefficient of Friction: For tile installed on walkway surfaces, provide products with the following values as determined by testing identical products per ASTM C 1028:

1. Level Surfaces: Minimum 0.6.

2. Step Treads: Minimum 0.6.
3. Ramp Surfaces: Minimum 0.8.

1.5 SUBMITTALS

A. Samples for Verification:

1. Chip-size units of each type and composition of tile and for each color and finish required.

1.6 QUALITY ASSURANCE

A. Source Limitations for Tile: Obtain all tile of same type and color or finish from one source or producer.

1. Obtain tile from same production run and of consistent quality in appearance and physical properties for each contiguous area.

B. Source Limitations for Setting and Grouting Materials: Obtain ingredients of a uniform quality for each mortar, adhesive, and grout component from a single manufacturer and each aggregate from one source or producer.

C. Source Limitations for Other Products: Obtain each of the following products specified in this Section through one source from a single manufacturer for each product:

1. Stone thresholds.
2. Waterproofing.
3. Joint sealants.
4. Cementitious backer units.
5. Metal edge strips.

D. Preinstallation Conference: Conduct conference at Project site to comply with requirements in Division 1 Section "Project Management and Coordination."

1.7 DELIVERY, STORAGE, AND HANDLING

A. Deliver and store packaged materials in original containers with seals unbroken and labels intact until time of use. Comply with requirement in ANSI A137.1 for labeling sealed tile packages.

B. Store tile and cementitious materials on elevated platforms, under cover, and in a dry location.

C. Store aggregates where grading and other required characteristics can be maintained and contamination avoided.

D. Store liquid latexes and emulsion adhesives in unopened containers and protected from freezing.

E. Handle tile that has temporary protective coating on exposed surfaces to prevent coated surfaces from contacting backs or edges of other units. If coating does contact bonding surfaces of tile, remove coating from bonding surfaces before setting tile.

1.8 PROJECT CONDITIONS

A. Environmental Limitations: Do not install tile until construction in spaces is complete and ambient temperature and humidity conditions are maintained at the levels indicated in referenced standards and manufacturer's written instructions.

1.9 EXTRA MATERIALS

A. Furnish extra materials described below that match products installed and that are packaged with protective covering for storage and identified with labels describing contents.

1. Tile and Trim Units: Furnish quantity of full-size units equal to 3 percent of amount installed, for each type, composition, color, pattern, and size indicated.

PART 2 - PRODUCTS

2.1 MANUFACTURERS

A. In other Part 2 articles where titles below introduce lists, the following requirements apply for product selection:

1. Products: Subject to compliance with requirements, provide one of the products specified.
2. Manufacturers: Subject to compliance with requirements, provide products by one of the manufacturers specified.

2.2 PRODUCTS, GENERAL

A. ANSI Ceramic Tile Standard: Provide tile that complies with ANSI A137.1, "Specifications for Ceramic Tile," for types, compositions, and other characteristics indicated.

1. Provide tile complying with Standard grade requirements, unless otherwise indicated.
2. For facial dimensions of tile, comply with requirements relating to tile sizes specified in Part 1 "Definitions" Article.

B. ANSI Standards for Tile Installation Materials: Provide materials complying with ANSI standards referenced in "Setting and Grouting Materials" Article.

C. Colors, Textures, and Patterns: Where manufacturer's standard products are indicated for tile, grout, and other products requiring selection of colors, surface textures, patterns, and other appearance characteristics, provide specific products or materials complying with the following requirements:

1. As indicated by manufacturer's designations.

D. Factory Blending: For tile exhibiting color variations within ranges selected during Sample submittals, blend tile in factory and package so tile units taken from one package show same range in colors as those taken from other packages and match approved Samples.

E. Mounting: For factory-mounted tile, provide back- or edge-mounted tile assemblies as standard with manufacturer, unless otherwise indicated.

F. Factory-Applied Temporary Protective Coating: Where indicated under tile type, protect exposed surfaces of tile against adherence of mortar and grout by precoating with continuous film of petroleum paraffin wax, applied hot. Do not coat unexposed tile surfaces.

2.3 TILE PRODUCTS

A. Available Manufacturers:

1. American Olean; Div. of Dal-Tile International Corp.
2. Crossville Ceramics Company, L.P.
3. Daltile; Div. of Dal-Tile International Inc.
4. Royal Mosa.

B. Unglazed Ceramic Mosaic Tile **CTF-1, CTF-2, CTF-3**: Factory-mounted flat tile as follows:

1. Composition: Porcelain.
2. Surface: Smooth, without abrasive admixture.
3. Module Size: 1 by 1 inch.
4. Nominal Thickness: 1/4 inch.
5. Face: Plain with cushion edges.
6. **Provide epoxy grout.**
7. Products:

   a. CTF-1: Dal Tile, White #D317.
   b. CTF-2: Dal Tile, Almond #D035.
   c. CTF-3: Dal Tile, Cypress, #D452.

C. Glazed Wall Tile **CTW-1**: Flat tile as follows:

1. Module Size: 4 by 4 inches.
2. Thickness: 5/16 inch.
3. Face: Plain with modified square edges or cushion edges.
4. Finish: Bright, opaque glaze.
5. Mounting: Factory back-mounted.
6. **Provide epoxy grout.**
7. Products:

   a. CTW-1: Dal Tile, Almond #K165
   b. CTW-2: Dal Tile color to match existing.

D. Glazed Wall Tile Trim Units: Matching characteristics of adjoining flat tile and coordinated with sizes and coursing of adjoining flat tile where applicable. Provide shapes as follows, selected from manufacturer's standard shapes:

1. Base for Thin-Set Mortar Installations: Straight, module size 6 by 6 inches.
2. Wainscot Cap for Portland Cement Mortar Installations: Bullnose cap, module size 6 by 6 inches.
3. Wainscot Cap for Thin-Set Mortar Installations: Surface bullnose, module size 6 by 6 inches.
4. Wainscot Cap for Flush Conditions: Regular flat tile for conditions where tile wainscot is shown flush with wall surface above.
5. External Corners for Portland Cement Mortar Installations: Bullnose shape with radius of at least 3/4 inch, unless otherwise indicated.
6. External Corners for Thin-Set Mortar Installations: Surface bullnose.
7. Internal Corners: Field-butted square corners except with coved base and cap angle pieces designed to fit with stretcher shapes.

E. Ceramic Mosaic Trim Units: Matching characteristics of adjoining flat tile and coordinated with sizes and coursing of adjoining flat tile where applicable. Provide shapes as follows, selected from manufacturer's standard shapes:

1. Tapered Transition Tile at Showers: Shape designed to effect transition between thickness of tile floor and adjoining floor finishes of different thickness, tapered to provide reduction in thickness from 1/2 to 1/4 inch across nominal 4-inch dimension.

2.4 THRESHOLDS

A. General: Fabricate to sizes and profiles indicated or required to provide transition between adjacent floor finishes.

1. Bevel edges at 1:2 slope, aligning lower edge of bevel with adjacent floor finish. Limit height of bevel to 1/2 inch or less, and finish bevel to match face of threshold.

B. Marble Thresholds: ASTM C 503 with a minimum abrasion resistance of 10 per ASTM C 1353 or ASTM C 241 and with honed finish.

1. Description: Uniform, fine- to medium-grained white stone with gray veining.

2.5 WATERPROOFING AND CRACK-SUPPRESSION MEMBRANES FOR THIN-SET TILE INSTALLATIONS

A. General: Manufacturer's standard product that complies with ANSI A118.10, selected from the following.

B. Fabric-Reinforced, Modified-Bituminous-Sheet Product: Self-adhering SBS-modified-bituminous sheet with woven reinforcement facing for adhering to latex-portland cement mortar; 36 inches wide by 0.040-inch nominal thickness.

1. Available Product: National Applied Construction Products, Inc.; Strataflex.

C. Fabric-Reinforced, Fluid-Applied Product: System consisting of liquid-latex rubber and fabric reinforcement.

1. Available Products:

a. Custom Building Products; Trowel & Seal Waterproofing and Anti-Fracture Membrane.
b. LATICRETE International Inc.; Laticrete 9235 Waterproof Membrane.
c. MAPEI Corporation; PRP M19.
d. Summitville Tiles, Inc.; S-9000.

D. Latex-Portland Cement Product: Flexible mortar consisting of cement-based mix and acrylic-latex additive.

1. Available Products:

a. Boiardi Products Corporation; Elastiment 323.
b. MAPEI Corporation; PRP 315.
c. Southern Grouts & Mortars, Inc.; Southcrete 1100.
d. TEC Specialty Products Inc.; TA-324, Triple Flex.

2.6 SETTING AND GROUTING MATERIALS

A. Available Manufacturers:

1. DAP, Inc.
2. LATICRETE International Inc.
3. MAPEI Corporation.
4. TEC Specialty Products Inc.

B. Latex-Portland Cement Mortar (Thin Set): ANSI A118.4, consisting of the following:

1. Prepackaged dry-mortar mix containing dry, redispersible, ethylene vinyl acetate additive to which only water must be added at Project site.
2. Prepackaged dry-mortar mix combined with acrylic resin or styrene-butadiene-rubber liquid-latex additive.

a. For wall applications, provide nonsagging mortar that complies with Paragraph F-4.6.1 in addition to the other requirements in ANSI A118.4.

C. Chemical-Resistant, Water-Cleanable, Tile-Setting and -Grouting Epoxy: ANSI A118.3.

1. Provide product capable of withstanding continuous and intermittent exposure to temperatures of up to 140 deg F and 212 deg F, respectively, and certified by manufacturer for intended use.

2.7 ELASTOMERIC SEALANTS

A. General: Provide manufacturer's standard chemically curing, elastomeric sealants of base polymer and characteristics indicated that comply with applicable requirements in Division 7 Section "Joint Sealants."

B. Colors: Provide colors of exposed sealants to match colors of grout in tile adjoining sealed joints, unless otherwise indicated.

C. One-Part, Mildew-Resistant Silicone Sealant: ASTM C 920; Type S; Grade NS; Class 25; Uses NT, G, A, and, as applicable to nonporous joint substrates indicated, O; formulated with fungicide, intended for sealing interior ceramic tile joints and other nonporous substrates that are subject to in-service exposures of high humidity and extreme temperatures.

1. Available Products:

    a. Dow Corning Corporation; Dow Corning 786.
    b. GE Silicones; Sanitary 1700.
    c. Pecora Corporation; Pecora 898 Sanitary Silicone Sealant.
    d. Tremco, Inc.; Tremsil 600 White.

D. Chemical-Resistant Sealants: For chemical-resistant floors, provide chemical-resistant elastomeric sealant of type recommended and produced by chemical-resistant mortar and grout manufacturer for type of application indicated, with proven service record and compatibility with tile and other setting materials, and with chemical resistance equivalent to mortar/grout. Include primer and backer rod recommended by manufacturer.

2.8 MISCELLANEOUS MATERIALS

A. Trowelable Underlayments and Patching Compounds: Latex-modified, portland cement-based formulation provided or approved by manufacturer of tile-setting materials for installations indicated.

B. Metal Edge Strips: Angle or L-shape, height to match tile and setting-bed thickness, metallic or combination of metal and PVC or neoprene base, designed specifically for flooring applications, white zinc alloy exposed-edge material.

C. Temporary Protective Coating: Product indicated below that is formulated to protect exposed surfaces of tile against adherence of mortar and grout; compatible with tile, mortar, and grout products; and easily removable after grouting is completed without damaging grout or tile.

1. Petroleum paraffin wax, fully refined and odorless, containing at least 0.5 percent oil with a melting point of 120 to 140 deg F per ASTM D 87.
2. Grout release in form of manufacturer's standard proprietary liquid coating that is specially formulated and recommended for use as temporary protective coating for tile.

D. Tile Cleaner: A neutral cleaner capable of removing soil and residue without harming tile and grout surfaces, specifically approved for materials and installations indicated by tile and grout manufacturers.

2.9 MIXING MORTARS AND GROUT

A. Mix mortars and grouts to comply with referenced standards and mortar and grout manufacturers' written instructions.

B. Add materials, water, and additives in accurate proportions.

C. Obtain and use type of mixing equipment, mixer speeds, mixing containers, mixing time, and other procedures to produce mortars and grouts of uniform quality with optimum performance characteristics for installations indicated.

PART 3 - EXECUTION

3.1 EXAMINATION

A. Examine substrates, areas, and conditions where tile will be installed, with Installer present, for compliance with requirements for installation tolerances and other conditions affecting performance of installed tile.

1. Verify that substrates for setting tile are firm; dry; clean; free of oil, waxy films, and curing compounds; and within flatness tolerances required by referenced ANSI A108 Series of tile installation standards for installations indicated.
2. Verify that installation of grounds, anchors, recessed frames, electrical and mechanical units of work, and similar items located in or behind tile has been completed before installing tile.
3. Verify that joints and cracks in tile substrates are coordinated with tile joint locations; if not coordinated, adjust joint locations in consultation with Architect.

B. Proceed with installation only after unsatisfactory conditions have been corrected.

3.2 PREPARATION

A. Remove coatings, including curing compounds and other substances that contain soap, wax, oil, or silicone, that are incompatible with tile-setting materials.

B. Provide concrete substrates for tile floors installed with adhesives or thin-set mortar that comply with flatness tolerances specified in referenced ANSI A108 Series of tile installation standards.

1. Fill cracks, holes, and depressions with trowelable leveling and patching compound according to tile-setting material manufacturer's written instructions. Use product specifically recommended by tile-setting material manufacturer.
2. Remove protrusions, bumps, and ridges by sanding or grinding.

C. Blending: For tile exhibiting color variations within ranges selected during Sample submittals, verify that tile has been factory blended and packaged so tile units taken from one package show same range of colors as those taken from other packages and match approved Samples. If not factory blended, either return to manufacturer or blend tiles at Project site before installing.

D. Field-Applied Temporary Protective Coating: Where indicated under tile type or needed to prevent grout from staining or adhering to exposed tile surfaces, precoat them with continuous film of temporary protective coating, taking care not to coat unexposed tile surfaces.

3.3 INSTALLATION, GENERAL

A. ANSI Tile Installation Standards: Comply with parts of ANSI A108 Series "Specifications for Installation of Ceramic Tile" that apply to types of setting and grouting materials and to methods indicated in ceramic tile installation schedules.

B. TCA Installation Guidelines: TCA's "Handbook for Ceramic Tile Installation." Comply with TCA installation methods indicated in ceramic tile installation schedules.

C. Extend tile work into recesses and under or behind equipment and fixtures to form complete covering without interruptions, unless otherwise indicated. Terminate work neatly at obstructions, edges, and corners without disrupting pattern or joint alignments.

D. Accurately form intersections and returns. Perform cutting and drilling of tile without marring visible surfaces. Carefully grind cut edges of tile abutting trim, finish, or built-in items for straight aligned joints. Fit tile closely to electrical outlets, piping, fixtures, and other penetrations so plates, collars, or covers overlap tile.

E. Jointing Pattern: Lay tile in grid pattern, unless otherwise indicated. Align joints when adjoining tiles on floor, base, walls, and trim are same size. Lay out tile work and center tile fields in both directions in each space or on each wall area. Adjust to minimize tile cutting. Provide uniform joint widths, unless otherwise indicated.

1. For tile mounted in sheets, make joints between tile sheets same width as joints within tile sheets so joints between sheets are not apparent in finished work.

F. Lay out tile wainscots to next full tile beyond dimensions indicated.

G. Expansion Joints: Locate expansion joints and other sealant-filled joints, including control, contraction, and isolation joints, where indicated during installation of setting materials, mortar beds, and tile. Do not saw-cut joints after installing tiles.

1. Locate joints in tile surfaces directly above joints in concrete substrates.
2. Prepare joints and apply sealants to comply with requirements in Division 7 Section "Joint Sealants."

H. Grout tile to comply with requirements of the following tile installation standards:

1. For ceramic tile grouts (sand-portland cement; dry-set, commercial portland cement; and latex-portland cement grouts), comply with ANSI A108.10.
2. For chemical-resistant epoxy grouts, comply with ANSI A108.6.
3. For chemical-resistant furan grouts, comply with ANSI A108.8.

I. At showers, tubs, and where indicated, install cementitious backer units and treat joints to comply with ANSI A108.11 and manufacturer's written instructions for type of application indicated.

3.4 WATERPROOFING AND CRACK-SUPPRESSION MEMBRANE INSTALLATION

A. Install waterproofing to comply with ANSI A108.13 and waterproofing manufacturer's written instructions to produce waterproof membrane of uniform thickness bonded securely to substrate.

B. Install crack-suppression membrane to comply with manufacturer's written instructions to produce membrane of uniform thickness bonded securely to substrate.

C. Do not install tile over waterproofing until waterproofing has cured and been tested to determine that it is watertight.

3.5 FLOOR TILE INSTALLATION

A. General: Install tile to comply with requirements in the Floor Tile Installation Schedule, including those referencing TCA installation methods and ANSI A108 Series of tile installation standards.

1. For installations indicated below, follow procedures in ANSI A108 Series tile installation standards for providing 95 percent mortar coverage.

    a. Tile floors in wet areas.
    b. Tile floors composed of rib-backed tiles.

B. Joint Widths: Install tile on floors with the following joint widths:

1. Ceramic Mosaic Tile: 1/16 inch.
2. Paver Tile: 1/4 inch or less.

C. Stone Thresholds: Install stone thresholds at locations indicated; set in same type of setting bed as abutting field tile, unless otherwise indicated.

1. Set thresholds in latex-portland cement mortar for locations where mortar bed would otherwise be exposed above adjacent nontile floor finish.

D. Metal Edge Strips: Install at locations indicated or where exposed edge of tile flooring meets carpet, wood, or other flooring that finishes flush with top of tile.

3.6 WALL TILE INSTALLATION

A. Install types of tile designated for wall installations to comply with requirements in the Wall Tile Installation Schedule, including those referencing TCA installation methods and ANSI setting-bed standards.

B. Install metal lath and scratch coat for walls to comply with ANSI A108.1A, Section 4.1.

C. Joint Widths: Install tile on walls with the following joint widths:

1. Glazed Wall Tile: 1/16 inch.

3.7 CLEANING AND PROTECTING

A. Cleaning: On completion of placement and grouting, clean all ceramic tile surfaces so they are free of foreign matter.

1. Remove epoxy grout residue from tile as soon as possible.
2. Clean grout smears and haze from tile according to tile and grout manufacturer's written instructions, but no sooner than 10 days after installation. Use only cleaners recommended by tile and grout manufacturers and only after determining that cleaners are safe to use by testing on samples of tile and other surfaces to be cleaned. Protect metal surfaces and plumbing fixtures from effects of cleaning. Flush surfaces with clean water before and after cleaning.
3. Remove temporary protective coating by method recommended by coating manufacturer that is acceptable to tile and grout manufacturer. Trap and remove coating to prevent it from clogging drains.

B. When recommended by tile manufacturer, apply coat of neutral protective cleaner to completed tile walls and floors. Protect installed tile work with kraft paper or other heavy covering during construction period to prevent staining, damage, and wear.

C. Prohibit foot and wheel traffic from tiled floors for at least seven days after grouting is completed.

D. Before final inspection, remove protective coverings and rinse neutral cleaner from tile surfaces.

3.8 FLOOR TILE INSTALLATION SCHEDULE

A. Tile Installation: Chemical-resistant interior floor installation on concrete; chemical-resistant, water-cleanable, tile-setting and -grouting epoxy; epoxy grout; TCA F131 and ANSI A108.6.

1. Tile Type: Unglazed ceramic mosaic, Unglazed paver tile.
2. Grout: Chemical-resistant, water-cleanable, tile-setting and -grouting epoxy.

3.9 WALL TILE INSTALLATION SCHEDULE

A. Tile Installation: Exterior or interior wall installation over sound, dimensionally stable masonry or concrete; thin-set mortar; TCA W202 and ANSI A108.5.

1. Tile Type: Glazed wall tile.
2. Thin-Set Mortar: Latex-portland cement mortar.
3. Grout: Epoxy grout.

END OF SECTION 09310

SECTION 09511
ACOUSTICAL PANEL CEILINGS

PART 1 - GENERAL

1.1 RELATED DOCUMENTS

A. Drawings and general provisions of the Contract, including General and Supplementary Conditions and Division 1 Specification Sections, apply to this Section.

1.2 SUMMARY

A. This Section includes acoustical panels and exposed suspension systems for ceilings.

B. Products furnished, but not installed under this Section, include anchors, clips, and other ceiling attachment devices to be cast in concrete at ceilings.

1.3 DEFINITIONS

A. AC: Articulation Class.

B. CAC: Ceiling Attenuation Class.

C. LR: Light Reflectance coefficient.

D. NRC: Noise Reduction Coefficient.

1.4 SUBMITTALS

A. Product Data: For each type of product indicated.

B. Samples for Verification: For each component indicated and for each exposed finish required, prepared on Samples of size indicated below.

1. Acoustical Panel: Set of 6-inch- square Samples of each type, color, pattern, and texture.

C. Qualification Data: For testing agency.

D. Field quality-control test reports.

E. Product Test Reports: Based on evaluation of comprehensive tests performed by a qualified testing agency, for each acoustical panel ceiling.

F. Maintenance Data: For finishes to include in maintenance manuals.

1.5 QUALITY ASSURANCE

A. Source Limitations: Obtain each type of acoustical ceiling panel and supporting suspension system through one source from a single manufacturer.

B. Fire-Test-Response Characteristics: Provide acoustical panel ceilings that comply with the following requirements:

1. Fire-Resistance Characteristics: Where indicated, provide acoustical panel ceilings identical to those of assemblies tested for fire resistance per ASTM E 119 by UL or another testing and inspecting agency acceptable to authorities having jurisdiction.

a. Fire-Resistance Ratings: Indicated by design designations from UL's "Fire Resistance Directory" or from the listings of another testing and inspecting agency.
b. Identify materials with appropriate markings of applicable testing and inspecting agency.

2. Surface-Burning Characteristics: Provide acoustical panels with the following surface-burning characteristics complying with ASTM E 1264 for Class A materials as determined by testing identical products per ASTM E 84:

a. Smoke-Developed Index: 450 or less.

C. Seismic Standard: Provide acoustical panel ceilings designed and installed to withstand the effects of earthquake motions according to the following:

1. Standard for Ceiling Suspension Systems Requiring Seismic Restraint: Comply with ASTM E 580.

D. Preinstallation Conference: Conduct conference at Project site to comply with requirements in Division 1 Section "Project Management and Coordination."

1.6 DELIVERY, STORAGE, AND HANDLING

A. Deliver acoustical panels, suspension system components, and accessories to Project site in original, unopened packages and store them in a fully enclosed, conditioned space where they will be protected against damage from moisture, humidity, temperature extremes, direct sunlight, surface contamination, and other causes.

B. Before installing acoustical panels, permit them to reach room temperature and a stabilized moisture content.

C. Handle acoustical panels carefully to avoid chipping edges or damaging units in any way.

1.7 PROJECT CONDITIONS

A. Environmental Limitations: Do not install acoustical panel ceilings until spaces are enclosed and weatherproof, wet work in spaces is complete and dry, work above ceilings is complete, and ambient temperature and humidity conditions are maintained at the levels indicated for Project when occupied for its intended use.

1. Pressurized Plenums: Operate ventilation system for not less than 48 hours before beginning acoustical panel ceiling installation.

1.8 COORDINATION

A. Coordinate layout and installation of acoustical panels and suspension system with other construction that penetrates ceilings or is supported by them, including light fixtures, HVAC equipment, fire-suppression system, and partition assemblies.

1.9 EXTRA MATERIALS

A. Furnish extra materials described below that match products installed and that are packaged with protective covering for storage and identified with labels describing contents.

1. Acoustical Ceiling Panels: Full-size panels equal to 2.0 percent of quantity installed.
2. Suspension System Components: Quantity of each exposed component equal to 2.0 percent of quantity installed.

PART 2 - PRODUCTS

2.1 ACOUSTICAL PANELS, GENERAL

A. Acoustical Panel Standard: Provide manufacturer's standard panels of configuration indicated that comply with ASTM E 1264 classifications as designated by types, patterns, acoustical ratings, and light reflectances, unless otherwise indicated.

1. Mounting Method for Measuring NRC: Type E-400; plenum mounting in which face of test specimen is 15-3/4 inches away from test surface per ASTM E 795.

B. Acoustical Panel Colors and Patterns: Match appearance characteristics indicated for each product type.

1. Where appearance characteristics of acoustical panels are indicated by referencing pattern designations in ASTM E 1264 and not manufacturers' proprietary product designations, provide products selected by Architect from each manufacturer's full range that comply with requirements indicated for type, pattern, color, light reflectance, acoustical performance, edge detail, and size.

C. Broad Spectrum Antimicrobial Fungicide and Bactericide Treatment: Provide acoustical panels treated with manufacturer's standard antimicrobial formulation that inhibits fungus, mold, mildew, and gram-positive and gram-negative bacteria and showing no mold, mildew, or

bacterial growth when tested according to ASTM D 3273 and evaluated according to ASTM D 3274 or ASTM G 21.

D. Antimicrobial Fungicide Treatment: Provide acoustical panels with face and back surfaces coated with antimicrobial treatment consisting of manufacturer's standard formulation with fungicide added to inhibit growth of mold and mildew and showing no mold or mildew growth when tested according to ASTM D 3273 and evaluated according to ASTM D 3274 or ASTM G 21.

2.2 ACOUSTICAL PANELS FOR ACOUSTICAL PANEL CEILING **(APC-1)**

A. Products: Subject to compliance with requirements, provide one of the following:

1. Armstrong World Industries, Inc.; Fine Fissured #1831 (24" x 24")
   Armstrong World Industries, Inc.; Fine Fissured #1830 (48" x 24")
2. USG Interiors, Inc.; Equal.

B. Classification: Provide panels complying with ASTM E 1264 for type, form, and pattern as follows:

1. Type and Form: Type III, mineral base with painted finish; Form 2, water felted.

C. Color: White.

D. LR: Not less than 0.85.

E. NRC: Not less than 0.55.

F. CAC: Not less than 35.

G. Edge/Joint Detail: Square.

H. Thickness: 5/8 inch.

I. Modular Size: 24 by 24 inches and 24 x 48 inches.

2.3 ACOUSTICAL PANELS FOR ACOUSTICAL PANEL CEILING **(APC-2)**

A. Products: Subject to compliance with requirements, provide one of the following:

1. Armstrong World Industries, Inc.; Clean Room Mylar #1715.
2. USG Interiors, Inc.

B. Classification: Provide panels complying with ASTM E 1264 for type, form, and pattern as follows:

1. Type and Form: Type IV, mineral base with membrane faced overlay; Form 2.

C. Color: White.

D. LR: Not less than 0.79.

E. NRC: Not less than 0.55.

F. CAC: Not less than 35.

G. Edge/Joint Detail: Square.

H. Thickness: 1 inch.

I. Modular Size: 24 by 24 inches.

J. Antimicrobial Treatment: Panel based.

2.4 ACOUSTICAL PANELS FOR ACOUSTICAL PANEL CEILING **(APC-3)**

A. Products: Subject to compliance with requirements, provide one of the following:

1. Armstrong World Industries, Inc.; Painted Nubby Open Plan #3101.
2. USG Interiors, Inc.

B. Classification: Provide panels complying with ASTM E 1264 for type, form, and pattern as follows:

1. Type and Form: Type XII, glass-fiber base with membrane-faced overlay; Form 2.

C. Color: White.

D. LR: Not less than 0.80.

E. NRC: Not less than 0.90.

F. CAC: Not less than 24.

G. Edge/Joint Detail: Square.

H. Thickness: 1 inch.

I. Modular Size: 24 by 48 inches.

J. Antimicrobial Treatment: Panel based.

2.5 ACOUSTICAL PANELS FOR ACOUSTICAL PANEL CEILING **(APC-4) at Music Rooms**

A. Products: Subject to compliance with requirements, provide one of the following:

1. Wenger Quadratic Ceiling Diffusers 4' x 4'
   Or
2. Kinetics pre-approved equal.

B. Color: White.

C. Modular Size: 48 by 48 inches.

2.6 METAL SUSPENSION SYSTEMS, GENERAL

A. Metal Suspension System Standard: Provide manufacturer's standard direct-hung metal suspension systems of types, structural classifications, and finishes indicated that comply with applicable requirements in ASTM C 635.

B. Finishes and Colors, General: Comply with NAAMM's "Metal Finishes Manual for Architectural and Metal Products" for recommendations for applying and designating finishes. Provide manufacturer's standard factory-applied finish for type of system indicated.

C. Attachment Devices: Size for five times the design load indicated in ASTM C 635, Table 1, "Direct Hung," unless otherwise indicated. Comply with seismic design requirements.

D. Wire Hangers, Braces, and Ties: Provide wires complying with the following requirements:

1. Zinc-Coated, Carbon-Steel Wire: ASTM A 641/A 641M, Class 1 zinc coating, soft temper.

E. Hanger Rods: Mild steel, zinc coated or protected with rust-inhibitive paint.

F. Hold-Down Clips: Where indicated, provide manufacturer's standard hold-down clips spaced 24 inches o.c. on all cross tees.

G. Impact Clips: Where indicated, provide manufacturer's standard impact-clip system designed to absorb impact forces against acoustical panels.

2.7 METAL SUSPENSION SYSTEM FOR ACOUSTICAL PANEL CEILING

A. Products: Subject to compliance with requirements, provide suspension systems that comply with specified ceiling panels.

B. Wide-Face, Capped, Double-Web, Steel Suspension System: Main and cross runners roll formed from cold-rolled steel sheet, prepainted, electrolytically zinc coated, or hot-dip galvanized according to ASTM A 653/A 653M, not less than G30 coating designation, with prefinished 15/16-inch- wide metal caps on flanges.

1. Structural Classification: Intermediate-duty system.
2. End Condition of Cross Runners: Butt-edge type.
3. Face Design: Flat, flush.
4. Cap Material: Steel or aluminum cold-rolled sheet.
5. Cap Finish: White.

2.8 METAL EDGE MOLDINGS AND TRIM

A. Products: Subject to compliance with requirements, provide one of the following:

1. Armstrong World Industries, Inc.
2. USG Interiors, Inc.

B. Roll-Formed, Sheet-Metal Edge Moldings and Trim: Type and profile indicated or, if not indicated, manufacturer's standard moldings for edges and penetrations that comply with seismic design requirements; formed from sheet metal of same material, finish, and color as that used for exposed flanges of suspension system runners.

1. Provide manufacturer's standard edge moldings that fit acoustical panel edge details and suspension systems indicated and that match width and configuration of exposed runners, unless otherwise indicated.
2. For circular penetrations of ceiling, provide edge moldings fabricated to diameter required to fit penetration exactly.

C. Extruded-Aluminum Edge Moldings and Trim: Where indicated, provide manufacturer's extruded-aluminum edge moldings and trim of profile indicated or referenced by manufacturer's designations, including splice plates, corner pieces, and attachment and other clips, complying with seismic design requirements and the following:

1. Aluminum Alloy: Alloy and temper recommended by aluminum producer and finisher for type of use and finish indicated, and with not less than the strength and durability properties of aluminum extrusions complying with ASTM B 221 for Alloy and Temper 6063-T5.
2. Finish designations prefixed by AA comply with system established by the Aluminum Association for designating aluminum finishes.
3. Conversion-Coated Finish: AA-M12C42 (Chemical Finish: cleaned with inhibited chemicals; acid-chromate-fluoride-phosphate conversion coating).
4. Conversion-Coated and Factory-Primed Finish: AA-M12C42R1x (Chemical Finish: cleaned with inhibited chemicals; acid-chromate-fluoride-phosphate conversion coating; organic coating as follows):

    a. Manufacturer's standard, factory-applied prime-coat finish ready for field painting.

5. Class II, Clear Anodic Finish: AA-M12C22A31 (Mechanical Finish: nonspecular as fabricated; Chemical Finish: etched, medium matte; Anodic Coating: Architectural Class II, clear coating 0.010 mm or thicker) complying with AAMA 611.
6. Baked-Enamel Finish: AA-C12C42R1x (Chemical Finish: cleaned with inhibited chemicals; Chemical Finish: acid-chromate-fluoride-phosphate conversion coating; organic coating: as specified below). Apply baked enamel complying with paint manufacturer's written instructions for cleaning, conversion coating, and painting.

    a. Organic Coating: Thermosetting, primer/topcoat system with a minimum dry film thickness of 0.8 to 1.2 mils.

2.9 ACOUSTICAL SEALANT

A. Available Products: Subject to compliance with requirements, products that may be incorporated into the Work include, but are not limited to, the following:

B. Products: Subject to compliance with requirements, provide one of the following:

1. Acoustical Sealant for Exposed and Concealed Joints:

    a. Pecora Corporation; AC-20 FTR Acoustical and Insulation Sealant.
    b. USG Corporation; SHEETROCK Acoustical Sealant.

2. Acoustical Sealant for Concealed Joints:

    a. OSI Sealants, Inc.; Pro-Series SC-175 Rubber Base Sound Sealant.
    b. Pecora Corporation; BA-98.
    c. Tremco, Inc.; Tremco Acoustical Sealant.

C. Acoustical Sealant for Exposed and Concealed Joints: Manufacturer's standard nonsag, paintable, nonstaining latex sealant complying with ASTM C 834 and effective in reducing airborne sound transmission through perimeter joints and openings in building construction as demonstrated by testing representative assemblies according to ASTM E 90.

PART 3 - EXECUTION

3.1 EXAMINATION

A. Examine substrates, areas, and conditions, including structural framing to which acoustical panel ceilings attach or abut, with Installer present, for compliance with requirements specified in this and other Sections that affect ceiling installation and anchorage and with requirements for installation tolerances and other conditions affecting performance of acoustical panel ceilings.

1. Proceed with installation only after unsatisfactory conditions have been corrected.

3.2 PREPARATION

A. Measure each ceiling area and establish layout of acoustical panels to balance border widths at opposite edges of each ceiling. Avoid using less-than-half-width panels at borders, and comply with layout shown on reflected ceiling plans.

3.3 INSTALLATION

A. General: Install acoustical panel ceilings to comply with ASTM C 636 and seismic design requirements indicated, per manufacturer's written instructions and CISCA's "Ceiling Systems Handbook."

1. Fire-Rated Assembly: Install fire-rated ceiling systems according to tested fire-rated design.

B. Suspend ceiling hangers from building's structural members and as follows:

1. Install hangers plumb and free from contact with insulation or other objects within ceiling plenum that are not part of supporting structure or of ceiling suspension system.

2. Splay hangers only where required to miss obstructions; offset resulting horizontal forces by bracing, countersplaying, or other equally effective means.
3. Splay hangers only where required to miss obstructions; offset resulting horizontal forces by bracing, countersplaying, or other equally effective means.
4. Where width of ducts and other construction within ceiling plenum produces hanger spacings that interfere with location of hangers at spacings required to support standard suspension system members, install supplemental suspension members and hangers in form of trapezes or equivalent devices.
5. Secure wire hangers to ceiling suspension members and to supports above with a minimum of three tight turns. Connect hangers directly either to structures or to inserts, eye screws, or other devices that are secure and appropriate for substrate and that will not deteriorate or otherwise fail due to age, corrosion, or elevated temperatures.
6. Secure flat, angle, channel, and rod hangers to structure, including intermediate framing members, by attaching to inserts, eye screws, or other devices that are secure and appropriate for both structure to which hangers are attached and type of hanger involved. Install hangers in a manner that will not cause them to deteriorate or fail due to age, corrosion, or elevated temperatures.
7. Do not support ceilings directly from permanent metal forms or floor deck. Fasten hangers to cast-in-place hanger inserts, postinstalled mechanical or adhesive anchors, or power-actuated fasteners that extend through forms into concrete.
8. When steel framing does not permit installation of hanger wires at spacing required, install carrying channels or other supplemental support for attachment of hanger wires.
9. Do not attach hangers to steel deck tabs.
10. Do not attach hangers to steel roof deck. Attach hangers to structural members.
11. Space hangers not more than 48 inches o.c. along each member supported directly from hangers, unless otherwise indicated; provide hangers not more than 8 inches from ends of each member.
12. Size supplemental suspension members and hangers to support ceiling loads within performance limits established by referenced standards and publications.

C. Secure bracing wires to ceiling suspension members and to supports with a minimum of four tight turns. Suspend bracing from building's structural members as required for hangers, without attaching to permanent metal forms, steel deck, or steel deck tabs. Fasten bracing wires into concrete with cast-in-place or postinstalled anchors.

D. Install edge moldings and trim of type indicated at perimeter of acoustical ceiling area and where necessary to conceal edges of acoustical panels.

1. Apply acoustical sealant in a continuous ribbon concealed on back of vertical legs of moldings before they are installed.
2. Screw attach moldings to substrate at intervals not more than 16 inches o.c. and not more than 3 inches from ends, leveling with ceiling suspension system to a tolerance of 1/8 inch in 12 feet. Miter corners accurately and connect securely.
3. Do not use exposed fasteners, including pop rivets, on moldings and trim.

E. Install suspension system runners so they are square and securely interlocked with one another. Remove and replace dented, bent, or kinked members.

F. Install acoustical panels with undamaged edges and fit accurately into suspension system runners and edge moldings. Scribe and cut panels at borders and penetrations to provide a neat, precise fit.

1. Arrange directionally patterned acoustical panels as follows:

    a. As indicated on reflected ceiling plans.
    b. Install panels in a basket-weave pattern.

2. For square-edged panels, install panels with edges fully hidden from view by flanges of suspension system runners and moldings.
3. For reveal-edged panels on suspension system runners, install panels with bottom of reveal in firm contact with top surface of runner flanges.
4. For reveal-edged panels on suspension system members with box-shaped flanges, install panels with reveal surfaces in firm contact with suspension system surfaces and panel faces flush with bottom face of runners.
5. Paint cut edges of panel remaining exposed after installation; match color of exposed panel surfaces using coating recommended in writing for this purpose by acoustical panel manufacturer.
6. Install hold-down clips in areas indicated, in areas required by authorities having jurisdiction, and for fire-resistance ratings; space as recommended by panel manufacturer's written instructions, unless otherwise indicated.
7. Install clean-room gasket system in areas indicated, sealing each panel and fixture as recommended by panel manufacturer's written instructions.
8. Protect lighting fixtures and air ducts to comply with requirements indicated for fire-resistance-rated assembly.

3.4 CLEANING

A. Clean exposed surfaces of acoustical panel ceilings, including trim, edge moldings, and suspension system members. Comply with manufacturer's written instructions for cleaning and touchup of minor finish damage. Remove and replace ceiling components that cannot be successfully cleaned and repaired to permanently eliminate evidence of damage.

END OF SECTION 09511

SECTION 09651
RESILIENT FLOOR TILE

PART 1 - GENERAL

1.1 RELATED DOCUMENTS

A. Drawings and general provisions of the Contract, including General and Supplementary Conditions and Division 1 Specification Sections, apply to this Section.

1.2 SUMMARY

A. This Section includes the following:

1. Vinyl composition tile (VCT).

1.3 SUBMITTALS

A. Product Data: For each type of product indicated.

B. Samples for Verification: Chip-size units of each color and pattern of resilient floor tile required.

C. Maintenance Data: For resilient products to include in maintenance manuals.

1.4 QUALITY ASSURANCE

A. Fire-Test-Response Characteristics: Provide products identical to those tested for fire-exposure behavior per test method indicated by a testing and inspecting agency acceptable to authorities having jurisdiction.

1.5 DELIVERY, STORAGE, AND HANDLING

A. Store resilient products and installation materials in dry spaces protected from the weather, with ambient temperatures maintained within range recommended by manufacturer, but not less than 50 deg F or more than 90 deg F. Store tiles on flat surfaces.

1.6 PROJECT CONDITIONS

A. Maintain temperatures within range recommended by manufacturer, but not less than 70 deg F or more than 95 deg F, in spaces to receive floor tile during the following time periods:

1. 48 hours before installation.
2. During installation.
3. 48 hours after installation.

B. After postinstallation period, maintain temperatures within range recommended by manufacturer, but not less than 55 deg F or more than 95 deg F.

C. Close spaces to traffic during floor covering installation.

D. Close spaces to traffic for 48 hours after floor covering installation.

E. Install resilient products after other finishing operations, including painting, have been completed.

1.7 EXTRA MATERIALS

A. Furnish extra materials described below that match products installed and that are packaged with protective covering for storage and identified with labels describing contents.

1. Floor Tile: Furnish 1 box for every 50 boxes or fraction thereof, of each type, color, and pattern of floor tile installed.

PART 2 - PRODUCTS

2.1 MANUFACTURERS

A. Available Products: Subject to compliance with requirements, products that may be incorporated into the Work include, but are not limited to, the products listed in other Part 2 articles.

B. Products: Subject to compliance with requirements, provide one of the products listed in other Part 2 articles.

2.2 COLORS AND PATTERNS

A. Colors and Patterns: As indicated by manufacturer's designations.

2.3 VINYL COMPOSITION TILE **VCT-1**

A. Vinyl Composition Tile (VCT): ASTM F 1066.

1. Armstrong World Industries, Inc.; Standard Excelon, Imperial Texture, #51853 Sandrift White.

B. Class: 2 (through-pattern tile).

C. Wearing Surface: Smooth.

D. Thickness: 0.125 inch.

E. Size: 12 by 12 inches.

F. Fire-Test-Response Characteristics:

1. Critical Radiant Flux Classification: Class I, not less than 0.45 W/sq. cm per ASTM E 648.

2.4 VINYL COMPOSITION TILE **VCT-2**

A. Vinyl Composition Tile (VCT): ASTM F 1066.

1. Armstrong World Industries, Inc.; Standard Excelon, Imperial Texture, #51872 Tea Garden Green.

B. Class: 2 (through-pattern tile).

C. Wearing Surface: Smooth.

D. Thickness: 0.125 inch.

E. Size: 12 by 12 inches.

F. Fire-Test-Response Characteristics:

1. Critical Radiant Flux Classification: Class I, not less than 0.45 W/sq. cm per ASTM E 648.

2.5 INSTALLATION MATERIALS

A. Trowelable Leveling and Patching Compounds: Latex-modified, portland cement based or blended hydraulic cement based formulation provided or approved by resilient product manufacturer for applications indicated.

B. Adhesives: Water-resistant type recommended by manufacturer to suit resilient products and substrate conditions indicated.

1. Use adhesives that comply with the following limits for VOC content when calculated according to 40 CFR 59, Subpart D (EPA Method 24):

    a. VCT and Asphalt Tile Adhesives: 50 g/L.

C. Stair-Tread-Nose Filler: Two-part epoxy compound recommended by resilient tread manufacturer to fill nosing substrates that do not conform to tread contours.

1. Metal Edge Strips: Extruded aluminum with mill finish of width shown, of height required to protect exposed edges of tiles, and in maximum available lengths to minimize running joints.

2.6 INSTALLATION MATERIALS

A. Trowelable Leveling and Patching Compounds: Latex-modified, portland cement based or blended hydraulic cement based formulation provided or approved by resilient product manufacturer for applications indicated.

B. Adhesives: Water-resistant type recommended by manufacturer to suit resilient products and substrate conditions indicated.

1. Use adhesives that comply with the following limits for VOC content when calculated according to 40 CFR 59, Subpart D (EPA Method 24):

    a. VCT and Asphalt Tile Adhesives: 50 g/L.

C. Stair-Tread-Nose Filler: Two-part epoxy compound recommended by resilient tread manufacturer to fill nosing substrates that do not conform to tread contours.

D. Metal Edge Strips: Extruded aluminum with mill finish of width shown, of height required to protect exposed edges of tiles, and in maximum available lengths to minimize running joints.

PART 3 - EXECUTION

3.1 EXAMINATION

A. Examine substrates, with Installer present, for compliance with requirements for installation tolerances, moisture content, and other conditions affecting performance.

1. Verify that finishes of substrates comply with tolerances and other requirements specified in other Sections and that substrates are free of cracks, ridges, depressions, scale, and foreign deposits that might interfere with adhesion of resilient products.
2. Proceed with installation only after unsatisfactory conditions have been corrected.

3.2 PREPARATION

A. Prepare substrates according to manufacturer's written recommendations to ensure adhesion of resilient products.

B. Concrete Substrates: Prepare according to ASTM F 710.

1. Verify that substrates are dry and free of curing compounds, sealers, and hardeners.
2. Alkalinity and Adhesion Testing: Perform tests recommended by manufacturer. Proceed with installation only after substrates pass testing.
3. Moisture Testing:

    a. Perform anhydrous calcium chloride test, ASTM F 1869. Proceed with installation only after substrates have maximum moisture-vapor-emission rate of 3 lb of water/1000 sq. ft. in 24 hours.
    b. Perform tests recommended by manufacturer. Proceed with installation only after substrates pass testing.

C. Remove substrate coatings and other substances that are incompatible with adhesives and that contain soap, wax, oil, or silicone, using mechanical methods recommended by manufacturer. Do not use solvents.

D. Access Flooring Panels: Remove protective film of oil or other coating using method recommended by access flooring manufacturer.

E. Use trowelable leveling and patching compound to fill cracks, holes, and depressions in substrates.

F. Move resilient products and installation materials into spaces where they will be installed at least 48 hours in advance of installation.

1. Do not install resilient products until they are same temperature as space where they are to be installed.

G. Sweep and vacuum clean substrates to be covered by resilient products immediately before installation. After cleaning, examine substrates for moisture, alkaline salts, carbonation, and dust. Proceed with installation only after unsatisfactory conditions have been corrected.

3.3 TILE INSTALLATION

A. Lay out tiles from center marks established with principal walls, discounting minor offsets, so tiles at opposite edges of room are of equal width. Adjust as necessary to avoid using cut widths that equal less than one-half tile at perimeter.

1. Lay tiles square with room axis.

B. Match tiles for color and pattern by selecting tiles from cartons in the same sequence as manufactured and packaged, if so numbered. Discard broken, cracked, chipped, or deformed tiles.

1. Lay tiles with grain direction alternating in adjacent tiles (basket-weave pattern).

C. Scribe, cut, and fit tiles to butt neatly and tightly to vertical surfaces and permanent fixtures including built-in furniture, cabinets, pipes, outlets, edgings, door frames, thresholds, and nosings.

D. Extend tiles into toe spaces, door reveals, closets, and similar openings.

E. Maintain reference markers, holes, and openings that are in place or marked for future cutting by repeating on floor tiles as marked on substrates. Use chalk or other nonpermanent, nonstaining marking device.

F. Install tiles on covers for telephone and electrical ducts and similar items in finished floor areas. Maintain overall continuity of color and pattern with pieces of tile installed on covers. Tightly adhere tile edges to substrates that abut covers and to cover perimeters.

G. Adhere tiles to flooring substrates using a full spread of adhesive applied to substrate to produce a completed installation without open cracks, voids, raising and puckering at joints, telegraphing of adhesive spreader marks, and other surface imperfections.

3.4 CLEANING AND PROTECTION

A. Perform the following operations immediately after completing resilient product installation:

1. Remove adhesive and other blemishes from exposed surfaces.
2. Sweep and vacuum surfaces thoroughly.
3. Damp-mop surfaces to remove marks and soil.

    a. Do not wash surfaces until after time period recommended by manufacturer.

B. Protect resilient products from mars, marks, indentations, and other damage from construction operations and placement of equipment and fixtures during remainder of construction period. Use protection methods recommended in writing by manufacturer.

1. Do not apply protective floor polish. All floor finishes to be by Owner.
2. Cover products installed on horizontal surfaces with undyed, untreated building paper until Substantial Completion.
3. Do not move heavy and sharp objects directly over surfaces. Place hardboard or plywood panels over flooring and under objects while they are being moved. Slide or roll objects over panels without moving panels.

END OF SECTION 09651

Kingscott Associates, Inc.
Architects/Engineers
Kalamazoo, Michigan

SECTION 09653
RESILIENT WALL BASE AND ACCESSORIES

PART 1 - GENERAL

1.1 RELATED DOCUMENTS

A. Drawings and general provisions of the Contract, including General and Supplementary Conditions and Division 1 Specification Sections, apply to this Section.

1.2 SUMMARY

A. Section Includes:

1. Resilient base.
2. Resilient molding accessories.

B. Related Sections:

1. Division 9 Section "Sheet Vinyl Floor Coverings" for resilient sheet floor coverings.

1.3 SUBMITTALS

A. Product Data: For each type of product indicated.

B. Samples for Initial Selection: For each type of product indicated.

C. Samples for Verification: For each type of product indicated, in manufacturer's standard chip size Samples of each resilient product color, texture, and pattern required.

D. Product Schedule: For resilient products.

1.4 QUALITY ASSURANCE

A. Fire-Test-Response Characteristics: As determined by testing identical products according to ASTM E 648 or NFPA 253 by a qualified testing agency.

1. Critical Radiant Flux Classification: Class I, not less than 0.45 W/sq. cm.

1.5 DELIVERY, STORAGE, AND HANDLING

A. Store resilient products and installation materials in dry spaces protected from the weather, with ambient temperatures maintained within range recommended by manufacturer, but not less than 50 deg F or more than 90 deg F.

1.6 PROJECT CONDITIONS

A. Maintain ambient temperatures within range recommended by manufacturer, but not less than 70 deg F or more than 95 deg F, in spaces to receive resilient products during the following time periods:

1. 48 hours before installation.
2. During installation.
3. 48 hours after installation.

B. Until Substantial Completion, maintain ambient temperatures within range recommended by manufacturer, but not less than 55 deg F or more than 95 deg F.

C. Install resilient products after other finishing operations, including painting, have been completed.

1.7 EXTRA MATERIALS

A. Furnish extra materials that match products installed and that are packaged with protective covering for storage and identified with labels describing contents.

1. Furnish not less than 10 linear feet for every 500 linear feet or fraction thereof, of each type, color, pattern, and size of resilient product installed.

PART 2 - PRODUCTS

2.1 RESILIENT BASE RB-1

A. Resilient Base:

1. Manufacturers: Subject to compliance with requirements, provide products by one of the following:

a. Johnsonite.
b. Nora Rubber Flooring; Freudenberg Building Systems, Inc.
c. Roppe Corporation, USA.

B. Resilient Base Standard: ASTM F 1861.

1. Material Requirement: Type TS (rubber, vulcanized thermoset) or Type TP (rubber, thermoplastic).
2. Manufacturing Method: Group I (solid, homogeneous).

3. Style: Cove (base with toe).

C. Minimum Thickness: 0.125 inch.

D. Height: 4 inches.

E. Lengths: Coils in manufacturer's standard length.

F. Outside Corners: Job formed or preformed.

G. Inside Corners: Job formed or preformed.

H. Finish: Satin.

I. Colors and Patterns:

Smith:	Johnsonite, #73 Palm Leaf
Larson:	As selected by Architect from Manufacturer's full line.
Boulan:	As selected by Architect from Manufacturer's full line.

2.2 RESILIENT MOLDING ACCESSORY

A. Resilient Molding Accessory:

1. Manufacturers: Subject to compliance with requirements, provide products by one of the following:

   a. Johnsonite.
   b. Roppe Corporation, USA.

B. Description: Transition strips.

C. Material: Rubber.

D. Profile and Dimensions: As indicated.

E. Colors and Patterns: Match rubber base.

2.3 INSTALLATION MATERIALS

A. Trowelable Leveling and Patching Compounds: Latex-modified, portland cement based or blended hydraulic-cement-based formulation provided or approved by manufacturer for applications indicated.

B. Adhesives: Water-resistant type recommended by manufacturer to suit resilient products and substrate conditions indicated.

1. Use adhesives that comply with the following limits for VOC content when calculated according to 40 CFR 59, Subpart D (EPA Method 24):

   a. Cove Base Adhesives: Not more than 50 g/L.
   b. Rubber Floor Adhesives: Not more than 60 g/L.

C. Stair-Tread-Nose Filler: Two-part epoxy compound recommended by resilient tread manufacturer to fill nosing substrates that do not conform to tread contours.

D. Metal Edge Strips: Extruded aluminum with mill finish of width shown, of height required to protect exposed edges of tiles, and in maximum available lengths to minimize running joints.

PART 3 - EXECUTION

3.1 EXAMINATION

A. Examine substrates, with Installer present, for compliance with requirements for maximum moisture content and other conditions affecting performance of the Work.

B. Verify that finishes of substrates comply with tolerances and other requirements specified in other Sections and that substrates are free of cracks, ridges, depressions, scale, and foreign deposits that might interfere with adhesion of resilient products.

C. Proceed with installation only after unsatisfactory conditions have been corrected.

3.2 PREPARATION

A. Prepare substrates according to manufacturer's written instructions to ensure adhesion of resilient products.

B. Concrete Substrates for Resilient Stair Treads and Accessories: Prepare according to ASTM F 710.

1. Verify that substrates are dry and free of curing compounds, sealers, and hardeners.
2. Remove substrate coatings and other substances that are incompatible with adhesives and that contain soap, wax, oil, or silicone, using mechanical methods recommended by manufacturer. Do not use solvents.
3. Alkalinity and Adhesion Testing: Perform tests recommended by manufacturer.
4. Moisture Testing: Perform tests recommended by manufacturer. Proceed with installation only after substrates pass testing.

    a. Perform anhydrous calcium chloride test, ASTM F 1869. Proceed with installation only after substrates have maximum moisture-vapor-emission rate of 3 lb of water/1000 sq. ft. in 24 hours.
    b. Perform relative humidity test using in situ probes, ASTM F 2170. Proceed with installation only after substrates have maximum 75 percent relative humidity level measurement.

C. Fill cracks, holes, and depressions in substrates with trowelable leveling and patching compound and remove bumps and ridges to produce a uniform and smooth substrate.

D. Do not install resilient products until they are same temperature as the space where they are to be installed.

1. Move resilient products and installation materials into spaces where they will be installed at least 48 hours in advance of installation.

E. Sweep and vacuum clean substrates to be covered by resilient products immediately before installation.

3.3 RESILIENT BASE INSTALLATION

A. Comply with manufacturer's written instructions for installing resilient base.

B. Apply resilient base to walls, columns, pilasters, casework and cabinets in toe spaces, and other permanent fixtures in rooms and areas where base is required.

C. Install resilient base in lengths as long as practicable without gaps at seams and with tops of adjacent pieces aligned.

D. Tightly adhere resilient base to substrate throughout length of each piece, with base in continuous contact with horizontal and vertical substrates.

E. Do not stretch resilient base during installation.

F. On masonry surfaces or other similar irregular substrates, fill voids along top edge of resilient base with manufacturer's recommended adhesive filler material.

G. Preformed Corners: Install preformed corners before installing straight pieces.

H. Job-Formed Corners:

1. Outside Corners: Use straight pieces of maximum lengths possible. Form without producing discoloration (whitening) at bends.
2. Inside Corners: Use straight pieces of maximum lengths possible.

3.4 RESILIENT ACCESSORY INSTALLATION

A. Comply with manufacturer's written instructions for installing resilient accessories.

B. Resilient Stair Accessories:

1. Use stair-tread-nose filler to fill nosing substrates that do not conform to tread contours.
2. Tightly adhere to substrates throughout length of each piece.
3. For treads installed as separate, equal-length units, install to produce a flush joint between units.

C. Resilient Molding Accessories: Butt to adjacent materials and tightly adhere to substrates throughout length of each piece. Install reducer strips at edges of carpet and resilient floor covering that would otherwise be exposed.

3.5 CLEANING AND PROTECTION

A. Comply with manufacturer's written instructions for cleaning and protection of resilient products.

B. Perform the following operations immediately after completing resilient product installation:

1. Remove adhesive and other blemishes from exposed surfaces.
2. Sweep and vacuum surfaces thoroughly.
3. Damp-mop surfaces to remove marks and soil.

C. Protect resilient products from mars, marks, indentations, and other damage from construction operations and placement of equipment and fixtures during remainder of construction period.

D. Cover resilient products until Substantial Completion.

END OF SECTION 09653

SECTION 09681
CARPET TILE

PART 1 - GENERAL

1.1 RELATED DOCUMENTS

A. Drawings and general provisions of the Contract, including General and Supplementary Conditions and Division 1 Specification Sections, apply to this Section.

1.2 SUMMARY

A. This Section includes modular, fusion-bonded carpet tile.

B. Related Sections include the following:

1. Division 9 Section "Resilient Floor Tile and Resilient Wall Base and Accessories" for resilient wall base and accessories installed with carpet tile.

1.3 SUBMITTALS

A. Product Data: For each type of product indicated. Include manufacturer's written data on physical characteristics, durability, and fade resistance. Include installation recommendations for each type of substrate.

B. Shop Drawings: Show the following:

1. Columns, doorways, enclosing walls or partitions, built-in cabinets, and locations where cutouts are required in carpet tiles.
2. Carpet tile type, color, and dye lot.
3. Type of subfloor.
4. Type of installation.
5. Type, color, and location of edge, transition, and other accessory strips.
6. Transition details to other flooring materials.

C. Samples: For each of the following products and for each color and texture required. Label each Sample with manufacturer's name, material description, color, pattern, and designation indicated on Drawings and in schedules.

D. Qualification Data: For Installer.

E. Product Test Reports: Based on evaluation of comprehensive tests performed by a qualified testing agency.

F. Maintenance Data: For carpet tiles to include in maintenance manuals. Include the following:

1. Methods for maintaining carpet tile, including cleaning and stain-removal products and procedures and manufacturer's recommended maintenance schedule.
2. Precautions for cleaning materials and methods that could be detrimental to carpet tile.

G. Warranty: Special warranty specified in this Section.

1.4 QUALITY ASSURANCE

A. Installer Qualifications: An experienced installer who is certified by the Floor Covering Installation Board or who can demonstrate compliance with its certification program requirements.

B. Fire-Test-Response Characteristics: Provide products with the critical radiant flux classification indicated in Part 2, as determined by testing identical products per ASTM E 648 by an independent testing and inspecting agency acceptable to authorities having jurisdiction.

1.5 DELIVERY, STORAGE, AND HANDLING

A. Comply with CRI 104, Section 5, "Storage and Handling."

1.6 PROJECT CONDITIONS

A. Comply with CRI 104, Section 7.2, "Site Conditions; Temperature and Humidity" and Section 7.12, "Ventilation."

B. Environmental Limitations: Do not install carpet tiles until wet work in spaces is complete and dry, and ambient temperature and humidity conditions are maintained at the levels indicated for Project when occupied for its intended use.

C. Do not install carpet tiles over concrete slabs until slabs have cured and are sufficiently dry to bond with adhesive and concrete slabs have pH range recommended by carpet tile manufacturer.

D. Where demountable partitions or other items are indicated for installation on top of carpet tiles, install carpet tiles before installing these items.

1.7 WARRANTY

A. Special Warranty for Carpet Tiles: Manufacturer's standard form in which manufacturer agrees to repair or replace components of carpet tile installation that fail in materials or workmanship within specified warranty period.

1. Warranty does not include deterioration or failure of carpet tile due to unusual traffic, failure of substrate, vandalism, or abuse.
2. Failures include, but are not limited to, more than 10 percent loss of face fiber, edge raveling, snags, runs, loss of tuft bind strength, dimensional stability, excess static discharge and delamination.
3. Warranty Period: 15 years from date of Substantial Completion.

1.8 EXTRA MATERIALS

A. Furnish extra materials described below, before installation begins, that match products installed and that are packaged with protective covering for storage and identified with labels describing contents.

1. Carpet Tile: Full-size units equal to 5 percent of amount installed for each type indicated, but not less than 10 sq. yd..

PART 2 - PRODUCTS

2.1 CARPET TILE **CT-1**

A. Products: Subject to compliance with requirements, provide the following:

1. Interface

a. Color: 3063 Sea Turtle.
b. Pattern: Caribbean.
c. Source: Interface/Craig Boeve 800-336-0225 ext. 1206.

B. Fiber Content: DuPont Antron Legacy.

C. Pile Characteristic: Tufted textured loop pile.

D. Pile: 1.9 mm.

E. Gage: 1/12"

F. Yarn Weight: 24 oz.

G. Primary Backing: GlasBac Tile

H. Secondary Backing: GlasBac Tile.

I. Size: 19.69" x 19.69".

J. Antimicrobial Treatment: Manufacturer's standard material: Intersept

K. Performance Characteristics: As follows:

1. Critical Radiant Flux Classification: Not less than 0.45 W/sq. cm.

2. Dry Breaking Strength: Not less than 100 lbf per ASTM D 2646.
3. Colorfastness to Crocking: Not less than 4, wet and dry, per AATCC 165.
4. Colorfastness to Light: Not less than 4 after 40 AFU (AATCC fading units) per AATCC 16, Option E.
5. Antimicrobial Activity: Not less than 2-mm halo of inhibition for gram-positive bacteria; not less than 1-mm halo of inhibition for gram-negative bacteria; no fungal growth; per AATCC 174.

2.2 CARPET TILE **CT-2**

A. Products: Subject to compliance with requirements, provide the following:

1. Interface

a. Color: As selected by Architect from Manufacturer's full range.
b. Pattern: Caribbean.

B. Fiber Content: DuPont Antron Lumena made with 100% recycled content nylon.

C. Pile Characteristic: Tufted textured loop pile.

D. Pile: 1.9 mm.

E. Gage: 1/12"

F. Yarn Weight: 24 oz.

G. Primary Backing: GlasBac Tile

H. Secondary Backing: GlasBac Tile.

I. Size: 19.69" x 19.69".

J. Antimicrobial Treatment: Manufacturer's standard material: Intersept

K. Performance Characteristics: As follows:

1. Critical Radiant Flux Classification: Not less than 0.45 W/sq. cm.
2. Dry Breaking Strength: Not less than 100 lbf per ASTM D 2646.
3. Colorfastness to Crocking: Not less than 4, wet and dry, per AATCC 165.
4. Colorfastness to Light: Not less than 4 after 40 AFU (AATCC fading units) per AATCC 16, Option E.
5. Antimicrobial Activity: Not less than 2-mm halo of inhibition for gram-positive bacteria; not less than 1-mm halo of inhibition for gram-negative bacteria; no fungal growth; per AATCC 174.

2.3 INSTALLATION ACCESSORIES

A. Trowelable Leveling and Patching Compounds: Latex-modified, hydraulic-cement-based formulation provided or recommended by carpet tile manufacturer.

B. Adhesives: Water-resistant, mildew-resistant, nonstaining, pressure-sensitive type to suit products and subfloor conditions indicated, that complies with flammability requirements for installed carpet tile and is recommended by carpet tile manufacturer for releasable installation.

PART 3 - EXECUTION

3.1 EXAMINATION

A. Examine substrates, areas, and conditions, with Installer present, for compliance with requirements for maximum moisture content, alkalinity range, installation tolerances, and other conditions affecting carpet tile performance. Examine carpet tile for type, color, pattern, and potential defects.

B. Concrete Subfloors: Verify that concrete slabs comply with ASTM F 710 and the following:

1. Slab substrates are dry and free of curing compounds, sealers, hardeners, and other materials that may interfere with adhesive bond. Determine adhesion and dryness characteristics by performing bond and moisture tests recommended by carpet tile manufacturer.
2. Subfloor finishes comply with requirements specified in Division 3 Section "Cast-in-Place Concrete" for slabs receiving carpet tile.
3. Subfloors are free of cracks, ridges, depressions, scale, and foreign deposits.

C. For wood subfloors, verify the following:

1. Underlayment over subfloor complies with requirements specified in Division 6 Section "Rough Carpentry."
2. Underlayment surface is free of irregularities and substances that may interfere with adhesive bond or show through surface.

D. Proceed with installation only after unsatisfactory conditions have been corrected.

3.2 PREPARATION

A. General: Comply with CRI 104, Section 6.2, "Site Conditions; Floor Preparation," and with carpet tile manufacturer's written installation instructions for preparing substrates indicated to receive carpet tile installation.

B. Use trowelable leveling and patching compounds, according to manufacturer's written instructions, to fill cracks, holes, depressions, and protrusions in substrates. Fill or level cracks, holes and depressions 1/8 inch wide or wider and protrusions more than 1/32 inch, unless more stringent requirements are required by manufacturer's written instructions.

C. Remove coatings, including curing compounds, and other substances that are incompatible with adhesives and that contain soap, wax, oil, or silicone, without using solvents. Use mechanical methods recommended in writing by carpet tile manufacturer.

D. Broom and vacuum clean substrates to be covered immediately before installing carpet tile.

3.3 INSTALLATION

A. General: Comply with CRI 104, Section 14, "Carpet Modules," and with carpet tile manufacturer's written installation instructions.

B. Installation Method: As recommended in writing by carpet tile manufacturer.

C. Maintain dye lot integrity. Do not mix dye lots in same area.

D. Cut and fit carpet tile to butt tightly to vertical surfaces, permanent fixtures, and built-in furniture including cabinets, pipes, outlets, edgings, thresholds, and nosings. Bind or seal cut edges as recommended by carpet tile manufacturer.

E. Extend carpet tile into toe spaces, door reveals, closets, open-bottomed obstructions, removable flanges, alcoves, and similar openings.

F. Maintain reference markers, holes, and openings that are in place or marked for future cutting by repeating on finish flooring as marked on subfloor. Use nonpermanent, nonstaining marking device.

G. Install pattern parallel to walls and borders.

3.4 CLEANING AND PROTECTION

A. Perform the following operations immediately after installing carpet tile:

1. Remove excess adhesive, seam sealer, and other surface blemishes using cleaner recommended by carpet tile manufacturer.
2. Remove yarns that protrude from carpet tile surface.
3. Vacuum carpet tile using commercial machine with face-beater element.

B. Protect installed carpet tile to comply with CRI 104, Section 16, "Protection of Indoor Installations."

C. Protect carpet tile against damage from construction operations and placement of equipment and fixtures during the remainder of construction period. Use protection methods indicated or recommended in writing by carpet tile manufacturer.

END OF SECTION 09681

SECTION 09911
EXTERIOR PAINTING

PART 1 - GENERAL

1.1 RELATED DOCUMENTS

A. Drawings and general provisions of the Contract, including General and Supplementary Conditions and Division 1 Specification Sections, apply to this Section.

1.2 SUMMARY

A. This Section includes surface preparation and the application of paint systems on the following exterior substrates:

1. Steel.
2. Galvanized metal.

B. Related Sections include the following:

1. Division 5 Sections for shop priming of metal substrates with primers specified in this Section.
2. Division 9 Section "Interior Painting" for surface preparation and the application of paint systems on interior substrates.

1.3 SUBMITTALS

A. Product Data: For each type of product indicated.

1.4 QUALITY ASSURANCE

A. MPI Standards:

1. Products: Complying with MPI standards indicated and listed in "MPI Approved Products List."
2. Preparation and Workmanship: Comply with requirements in "MPI Architectural Painting Specification Manual" for products and paint systems indicated.

1.5 DELIVERY, STORAGE, AND HANDLING

A. Store materials not in use in tightly covered containers in well-ventilated areas with ambient temperatures continuously maintained at not less than 45 deg F.

1. Maintain containers in clean condition, free of foreign materials and residue.
2. Remove rags and waste from storage areas daily.

1.6 PROJECT CONDITIONS

A. Apply paints only when temperature of surfaces to be painted and ambient air temperatures are between 50 and 95 deg F.

B. Do not apply paints in snow, rain, fog, or mist; when relative humidity exceeds 85 percent; at temperatures less than 5 deg F above the dew point; or to damp or wet surfaces.

PART 2 - PRODUCTS

2.1 MANUFACTURERS

A. Available Manufacturers: Subject to compliance with requirements, manufacturers offering products that may be incorporated into the Work include, but are not limited to, the following:

1. Benjamin Moore & Co.
2. ICI Paints.
3. PPG Architectural Finishes, Inc.
4. Sherwin-Williams Company (The).

2.2 PAINT, GENERAL

A. Material Compatibility:

1. Provide materials for use within each paint system that are compatible with one another and substrates indicated, under conditions of service and application as demonstrated by manufacturer, based on testing and field experience.
2. For each coat in a paint system, provide products recommended in writing by manufacturers of topcoat for use in paint system and on substrate indicated.

B. Colors: Match specified coping color.

2.3 METAL PRIMERS

A. Alkyd Anticorrosive Metal Primer: MPI #79.

1. VOC Content: E Range of E2.

B. Cementitious Galvanized-Metal Primer: MPI #26.

1. VOC Content: E Range of E1.

2.4 EXTERIOR LATEX PAINTS

A. Exterior Latex (Semigloss): MPI #11 (Gloss Level 5).

1. VOC Content: E Range of E2.

2.5 EXTERIOR ALKYD PAINTS

A. Exterior Alkyd Enamel (Semigloss): MPI #94 (Gloss Level 5).

1. VOC Content: E Range of E2.

PART 3 - EXECUTION

3.1 EXAMINATION

A. Examine substrates and conditions, with Applicator present, for compliance with requirements for maximum moisture content and other conditions affecting performance of work.

B. Verify suitability of substrates, including surface conditions and compatibility with existing finishes and primers.

C. Begin coating application only after unsatisfactory conditions have been corrected and surfaces are dry.

1. Beginning coating application constitutes Contractor's acceptance of substrates and conditions.

3.2 PREPARATION

A. Comply with manufacturer's written instructions and recommendations in "MPI Architectural Painting Specification Manual" applicable to substrates and paint systems indicated.

B. Remove plates, machined surfaces, and similar items already in place that are not to be painted. If removal is impractical or impossible because of size or weight of item, provide surface-applied protection before surface preparation and painting.

1. After completing painting operations, use workers skilled in the trades involved to reinstall items that were removed. Remove surface-applied protection if any.
2. Do not paint over labels of independent testing agencies or equipment name, identification, performance rating, or nomenclature plates.

C. Clean substrates of substances that could impair bond of paints, including dirt, oil, grease, and incompatible paints and encapsulants.

1. Remove incompatible primers and reprime substrate with compatible primers as required to produce paint systems indicated.

D. Steel Substrates: Remove rust and loose mill scale. Clean using methods recommended in writing by paint manufacturer.

E. Galvanized-Metal Substrates: Remove grease and oil residue from galvanized sheet metal fabricated from coil stock by mechanical methods to produce clean, lightly etched surfaces that promote adhesion of subsequently applied paints.

3.3 APPLICATION

A. Apply paints according to manufacturer's written instructions.

1. Use applicators and techniques suited for paint and substrate indicated.
2. Paint surfaces behind movable items same as similar exposed surfaces. Before final installation, paint surfaces behind permanently fixed items with prime coat only.

B. Tint each undercoat a lighter shade to facilitate identification of each coat if multiple coats of same material are to be applied. Tint undercoats to match color of topcoat, but provide sufficient difference in shade of undercoats to distinguish each separate coat.

C. If undercoats or other conditions show through topcoat, apply additional coats until cured film has a uniform paint finish, color, and appearance.

D. Apply paints to produce surface films without cloudiness, spotting, holidays, laps, brush marks, roller tracking, runs, sags, ropiness, or other surface imperfections. Cut in sharp lines and color breaks.

3.4 FIELD QUALITY CONTROL

A. Testing of Paint Materials: Owner reserves the right to invoke the following procedure at any time and as often as Owner deems necessary during the period when paints are being applied:

1. Owner will engage the services of a qualified testing agency to sample paint materials being used. Samples of material delivered to Project site will be taken, identified, sealed, and certified in presence of Contractor.
2. Testing agency will perform tests for compliance of paint materials with product requirements.
3. Owner may direct Contractor to stop applying paints if test results show materials being used do not comply with product requirements. Contractor shall remove noncomplying-paint materials from Project site, pay for testing, and repaint surfaces painted with rejected materials. Contractor will be required to remove rejected materials from previously painted surfaces if, on repainting with complying materials, the two paints are incompatible.

3.5 CLEANING AND PROTECTION

A. At end of each workday, remove rubbish, empty cans, rags, and other discarded materials from Project site.

B. After completing paint application, clean spattered surfaces. Remove spattered paints by washing, scraping, or other methods. Do not scratch or damage adjacent finished surfaces.

C. Protect work of other trades against damage from paint application. Correct damage to work of other trades by cleaning, repairing, replacing, and refinishing, as approved by Architect, and leave in an undamaged condition.

D. At completion of construction activities of other trades, touch up and restore damaged or defaced painted surfaces.

3.6 EXTERIOR PAINTING SCHEDULE

A. Steel Substrates:

1. Alkyd System: MPI EXT 5.1D.

    a. Prime Coat: Alkyd anticorrosive metal primer.
    b. Intermediate Coat: Exterior alkyd enamel matching topcoat.
    c. Topcoat: Exterior alkyd enamel (semigloss).

B. Galvanized-Metal Substrates:

1. Latex System: MPI EXT 5.3A.

    a. Prime Coat: Cementitious galvanized-metal primer.
    b. Intermediate Coat: Exterior latex matching topcoat.
    c. Topcoat: Exterior latex (semigloss).

END OF SECTION 09911

SECTION 09912
INTERIOR PAINTING

PART 1 - GENERAL

1.1 RELATED DOCUMENTS

A. Drawings and general provisions of the Contract, including General and Supplementary Conditions and Division 1 Specification Sections, apply to this Section.

1.2 SUMMARY

A. This Section includes surface preparation and the application of paint systems on the following interior substrates:

1. Concrete.
2. Concrete masonry units (CMU).
3. Steel.
4. Galvanized metal.
5. Wood.
6. Gypsum board.
7. Patching of minor damage to wood.
8. Refinishing of existing wood casework.

B. Related Sections include the following:

1. Division 9 Section "Exterior Painting" for surface preparation and the application of paint systems on exterior substrates.

1.3 SUBMITTALS

A. Product Data: For each type of product indicated.

B. Samples for Verification: For each type of paint system and in each color and gloss of topcoat indicated.

1. Submit Samples on rigid backing, 8 inches square.

C. Product List: For each product indicated, include the following:

1. Printout of current "MPI Approved Products List" for each product category specified in Part 2, with the proposed product highlighted.

1.4 QUALITY ASSURANCE

A. MPI Standards:

1. Products: Complying with MPI standards indicated and listed in "MPI Approved Products List."
2. Preparation and Workmanship: Comply with requirements in "MPI Architectural Painting Specification Manual" for products and paint systems indicated.

B. Mockups: Apply benchmark samples of each finish system indicated and each color selected to verify preliminary selections made under sample submittals and to demonstrate aesthetic effects and set quality standards for materials and execution.

1. Architect will select one surface to represent surfaces and conditions for application of each type of finish system and substrate as follows:

a. Existing casework at Smith M.S. Home Skills Room – veneer repair and refinishing.
b. Vertical surface sample of at least 10 sq. ft.

1.5 DELIVERY, STORAGE, AND HANDLING

A. Store materials not in use in tightly covered containers in well-ventilated areas with ambient temperatures continuously maintained at not less than 45 deg F.

1. Maintain containers in clean condition, free of foreign materials and residue.
2. Remove rags and waste from storage areas daily.

1.6 PROJECT CONDITIONS

A. Apply paints only when temperature of surfaces to be painted and ambient air temperatures are between 50 and 95 deg F.

B. Do not apply paints when relative humidity exceeds 85 percent; at temperatures less than 5 deg F above the dew point; or to damp or wet surfaces.

1.7 EXTRA MATERIALS

A. Furnish extra materials described below that are from same production run (batch mix) as materials applied and that are packaged for storage and identified with labels describing contents.

1. Quantity: Furnish an additional 5 percent, but not less than 1 gal. of each material and color applied.

PART 2 - PRODUCTS

2.1 MANUFACTURERS

A. Manufacturers: Subject to compliance with requirements, provide products by one of the following:

1. Benjamin Moore & Co.
2. ICI Paints.
3. Sherwin-Williams Company (The).

2.2 PAINT, GENERAL

A. Material Compatibility:

1. Provide materials for use within each paint system that are compatible with one another and substrates indicated, under conditions of service and application as demonstrated by manufacturer, based on testing and field experience.
2. For each coat in a paint system, provide products recommended in writing by manufacturers of topcoat for use in paint system and on substrate indicated.
   a. Chemical Components of Field-Applied Interior Paints and Coatings: Provide products that comply with the following limits for VOC content, exclusive of colorants added to a tint base, when calculated according to 40 CFR 59, Subpart D (EPA Method 24).

B. Colors: As indicated in a color schedule.

2.3 BLOCK FILLERS

A. Interior/Exterior Latex Block Filler: MPI #4.

2.4 WOOD PATCHING COMPOUND

A. Solvent free wood filler with high solids content for easy smoothing. Product must be fast drying, sandable, stainable, cleans up with water, has minimal shrinkage and can be mixed with water-based stains, dyes or tints. Product must be compatible with finishes indicated.

2.5 PRIMERS/SEALERS

A. Interior Latex Primer/Sealer: MPI #50.

B. Interior Alkyd Primer/Sealer: MPI #45.

2.6 METAL PRIMERS

A. Alkyd Anticorrosive Metal Primer: MPI #79.

2.7 WOOD PRIMERS

A. Interior Latex-Based Wood Primer: MPI #39.

2.8 STAINS

A. Interior Wood Stain (Semitransparent): MPI #90.

2.9 POLYURETHANE FINISHES

A. Interior, Oil-Modified, Clear Urethane (Satin): MPI #57, Gloss Level 4.

2.10 LATEX PAINTS

A. Interior Latex (Flat): MPI #53 (Gloss Level 1).

B. Interior Latex (Semigloss): MPI #54 (Gloss Level 5).

2.11 ALKYD PAINTS

A. Interior Alkyd (Semigloss): MPI #47 (Gloss Level 5).

2.12 WATERBORNE ACRYLIC DRY FALL PAINT

A. Basis of Design product: Sherwin Williams Waterborne Dry Fall #6015-11264 (B42WJS).

1. Recommended spread rate per coat:

a. Wet Mils: 3.5-5.0
b. Dry Mils: 1.5-2.0

PART 3 - EXECUTION

3.1 EXAMINATION

A. Examine substrates and conditions, with Applicator present, for compliance with requirements for maximum moisture content and other conditions affecting performance of work.

B. Maximum Moisture Content of Substrates: When measured with an electronic moisture meter as follows:

1. Concrete: 12 percent.
2. Masonry (Clay and CMU): 12 percent.
3. Wood: 15 percent.
4. Gypsum Board: 12 percent.

5. Plaster: 12 percent.

C. Verify suitability of substrates, including surface conditions and compatibility with existing finishes and primers.

D. Begin coating application only after unsatisfactory conditions have been corrected and surfaces are dry.

1. Beginning coating application constitutes Contractor's acceptance of substrates and conditions.

3.2 PREPARATION

A. Comply with manufacturer's written instructions and recommendations in "MPI Architectural Painting Specification Manual" applicable to substrates indicated.

B. Remove plates, machined surfaces, and similar items already in place that are not to be painted. If removal is impractical or impossible because of size or weight of item, provide surface-applied protection before surface preparation and painting.

1. After completing painting operations, use workers skilled in the trades involved to reinstall items that were removed. Remove surface-applied protection if any.
2. Do not paint over labels of independent testing agencies or equipment name, identification, performance rating, or nomenclature plates.

C. Clean substrates of substances that could impair bond of paints, including dirt, oil, grease, and incompatible paints and encapsulants.

1. Remove incompatible primers and reprime substrate with compatible primers as required to produce paint systems indicated.
2. For finishing over existing clear finishes, remove or encapsulate incompatible finishes with a sealer recommended by finish coat manufacturer

D. Concrete Substrates: Remove release agents, curing compounds, efflorescence, and chalk. Do not paint surfaces if moisture content or alkalinity of surfaces to be painted exceeds that permitted in manufacturer's written instructions.

E. Clay Masonry Substrates: Remove efflorescence and chalk. Do not paint surfaces if moisture content of surfaces or alkalinity of mortar joints to be painted exceed that permitted in manufacturer's written instructions.

F. Concrete Masonry Substrates: Remove efflorescence and chalk. Do not paint surfaces if moisture content or alkalinity of surfaces to be painted exceeds that permitted in manufacturer's written instructions.

G. Steel Substrates: Remove rust and loose mill scale. Clean using methods recommended in writing by paint manufacturer.

H. Surface Preparation for Existing Bare and Painted Metal: Ferrous Metals: Clean ungalvanized ferrous-metal surfaces; remove rust, oil, grease, dirt, and other foreign substances. Use removal

or cleaning methods that comply with paint manufacturer's written recommendations. Sand smooth areas where existing paint is blistered, cracked, orange-peeled or otherwise blemished.

1. Touch up bare areas and prime coats that have been damaged. Wire-brush, clean with solvents recommended by paint manufacturer, and fill voids with patching compound. Touch up bare and patched areas with primer. Lightly sand or rub with steel wool before applying finish coats.

I. Galvanized-Metal Substrates: Remove grease and oil residue from galvanized sheet metal fabricated from coil stock by mechanical methods to produce clean, lightly etched surfaces that promote adhesion of subsequently applied paints.

J. Aluminum Substrates: Remove surface oxidation.

K. Wood Substrates:

1. Scrape and clean knots, and apply coat of knot sealer before applying primer.
2. Sand surfaces that will be exposed to view, and dust off.
3. Prime edges, ends, faces, undersides, and backsides of wood.
4. After priming, fill holes and imperfections in the finish surfaces with putty or plastic wood filler. Sand smooth when dried.

L. Veneer Wood Substrates (existing pre-finished):

1. Clean all existing finished surfaces with liquid cleaner as recommended by finishes manufacturer, making sure to remove all dirt, wax, grease, and oil.
2. Re-glue all loose veneer with water-based glue and carefully lightly wipe off excess glue from surrounding veneer with a firm, damp sponge.
3. Lightly rub all surfaces with 0 grade steel wool to create tooth for new finish, taking care not to cut through existing finish. If existing finish is cut through to bare wood, re-stain veneer to match the surrounding veneer color.
4. Fill areas of missing veneer with wood patching compound tinted to match the existing veneer. Use two coats minimum, wiping away excess compound with a damp, firm sponge immediately after each coat is applied to eliminate the need for sanding. Apply additional coats of patching compound until repaired area is flush with adjacent surfaces.
5. Lightly rub all surfaces with 0 grade steel wool to create toothing for new finish, taking care not to cut through existing finish. If existing finish is cut through to bare wood, re-stain veneer to match the surrounding veneer color.
6. After repair of existing veneer, refinish and stain all wood casework.

M. Gypsum Board Substrates: Do not begin paint application until finishing compound is dry and sanded smooth.

N. Plaster Substrates: Do not begin paint application until plaster is fully cured and dry.

O. Spray-Textured Ceiling Substrates: Do not begin paint application until surfaces are dry.

P. Cotton or Canvas Insulation Covering Substrates: Remove dust, dirt, and other foreign material that might impair bond of paints to substrates.

3.3 APPLICATION

A. Apply paints and varnishes according to manufacturer's written instructions.

1. Use applicators and techniques suited for paint and substrate indicated.
2. Paint surfaces behind movable equipment and furniture same as similar exposed surfaces. Before final installation, paint surfaces behind permanently fixed equipment or furniture with prime coat only.
3. Paint front and backsides of access panels, removable or hinged covers, and similar hinged items to match exposed surfaces.

B. Tint each undercoat a lighter shade to facilitate identification of each coat if multiple coats of same material are to be applied. Tint undercoats to match color of topcoat, but provide sufficient difference in shade of undercoats to distinguish each separate coat.

C. If undercoats or other conditions show through topcoat, apply additional coats until cured film has a uniform paint finish, color, and appearance.

D. Apply paints and varnishes to produce surface films without cloudiness, spotting, holidays, laps, brush marks, roller tracking, runs, sags, ropiness, or other surface imperfections. Cut in sharp lines and color breaks.

E. Painting Mechanical and Electrical Work: Paint items exposed in equipment rooms and occupied spaces including, but not limited to, the following:

1. Mechanical Work:

a. Uninsulated metal piping.
b. Uninsulated plastic piping.
c. Pipe hangers and supports.
d. Tanks that do not have factory-applied final finishes.
e. Visible portions of internal surfaces of metal ducts, without liner, behind air inlets and outlets.
f. Duct, equipment, and pipe insulation having cotton or canvas insulation covering or other paintable jacket material.
g. Mechanical equipment that is indicated to have a factory-primed finish for field painting.

2. Electrical Work:

a. Switchgear.
b. Panelboards.
c. Electrical equipment that is indicated to have a factory-primed finish for field painting.

3.4 FIELD QUALITY CONTROL

A. Testing of Paint Materials: Owner reserves the right to invoke the following procedure at any time and as often as Owner deems necessary during the period when paints are being applied:

1. Owner will engage the services of a qualified testing agency to sample paint materials being used. Samples of material delivered to Project site will be taken, identified, sealed, and certified in presence of Contractor.
2. Testing agency will perform tests for compliance with product requirements.
3. Owner may direct Contractor to stop applying paints if test results show materials being used do not comply with product requirements. Contractor shall remove noncomplying-paint materials from Project site, pay for testing, and repaint surfaces painted with rejected materials. Contractor will be required to remove rejected materials from previously painted surfaces if, on repainting with complying materials, the two paints are incompatible.

3.5 CLEANING AND PROTECTION

A. At end of each workday, remove rubbish, empty cans, rags, and other discarded materials from Project site.

B. After completing paint application, clean spattered surfaces. Remove spattered paints by washing, scraping, or other methods. Do not scratch or damage adjacent finished surfaces.

C. Protect work of other trades against damage from paint application. Correct damage to work of other trades by cleaning, repairing, replacing, and refinishing, as approved by Architect, and leave in an undamaged condition.

D. At completion of construction activities of other trades, touch up and restore damaged or defaced painted surfaces.

3.6 INTERIOR WOOD-FINISH-SYSTEM SCHEDULE

A. Finish Carpentry Substrates:

1. Polyurethane Varnish Over Stain System: MPI INT 6.3E. For use on bare wood.

    a. Stain Coat: Interior wood stain (semitransparent).
    b. Two Finish Coats: Interior, oil-modified, clear urethane satin.

2. Polyurethane Varnish System: MPI INT 6.3K. For use on previously finished and unstriped wood.

    a. Two Field-Applied Finish Coats: Interior, oil-modified, clear urethane satin.

B. Exposed Wood Panel-Product Substrates:

1. Polyurethane Varnish Over Stain System: MPI INT 6.4E. For use on bare wood.

    a. Stain Coat: Interior wood stain (semitransparent).
    b. Two Finish Coats: Interior, oil-modified, clear urethane satin.

2. Polyurethane Varnish System: MPI INT 6.4.J. For use on previously finished and unstriped wood.

a. One Factory-Applied Finish Coat: Matching field-applied finish coats.
b. Two Field-Applied Finish Coats: Interior, oil-modified, clear urethane satin.

3.7 INTERIOR PAINTING SCHEDULE

A. Concrete Substrates, Traffic Surfaces:

1. Clear Sealer System: MPI INT 3.2F.

a. First Coat: Interior/exterior clear concrete floor sealer (solvent based).
b. Topcoat: Interior/exterior clear concrete floor sealer (solvent based).

B. CMU Substrates:

1. Latex System: MPI INT 4.2A.

a. Prime Coat: Interior/exterior latex block filler.
b. Intermediate Coat: Interior latex matching topcoat.
c. Topcoat: Interior latex (semigloss).

C. Steel Substrates:

1. Alkyd System: MPI INT 5.1E.

a. Prime Coat: Alkyd anticorrosive metal primer.
b. Intermediate Coat: Interior alkyd matching topcoat.
c. Topcoat: Interior alkyd (semigloss).

D. Galvanized-Metal Substrates:

1. Alkyd System: MPI INT 5.3C.

a. Prime Coat: Cementitious galvanized-metal primer.
b. Intermediate Coat: Interior alkyd matching topcoat.
c. Topcoat: Interior alkyd (semigloss).

E. Dressed Lumber Substrates: Including architectural woodwork doors.

1. Latex Over Alkyd Primer System: MPI INT 6.3U.

a. Prime Coat: Interior alkyd primer/sealer.
b. Intermediate Coat: Interior latex matching topcoat.
c. Topcoat: Interior latex (gloss).

2. High-Performance Architectural Latex System: MPI INT 6.3A.

a. Prime Coat: Interior latex-based wood primer.
b. Intermediate Coat: High-performance architectural latex matching topcoat.
c. Topcoat: High-performance architectural latex (semigloss).

F. Gypsum Board Substrates:

1. Latex System: MPI INT 9.2A.

   a. Prime Coat: Interior latex primer/sealer.
   b. Intermediate Coat: Interior latex matching topcoat.
   c. Topcoat: Interior latex (flat) and (semigloss).

2. Flat finish only on gypsum board bulkheads and ceilings. Semigloss finish at walls.

PAINT SCHEDULE

IPS-1	PAINT	ICI	FROST	2006	(FIELD, WALLS)
IPS-2	PAINT	SHERWIN WILLIAMS	BASIL	6194	
IPS-3	PAINT	ICI	GREAT DESERT	598	

*Verify paint colors with Owner. Owner may choose to match their existing colors.

END OF SECTION 09912

SECTION 10101
VISUAL DISPLAY SURFACES

PART 1 - GENERAL

1.1 RELATED DOCUMENTS

A. Drawings and general provisions of the Contract, including General and Supplementary Conditions and Division 1 Specification Sections, apply to this Section.

1.2 SUMMARY

A. This Section includes the following:

1. Markerboards.
2. Tackboards.

1.3 DEFINITIONS

A. Visual Display Boards: Markerboards and tackboards.

1.4 SUBMITTALS

A. Product Data: For each type of product indicated.

1. Include motor capacities and individual panel weights for sliding visual display units.
2. Include computer system requirements for electronic markerboards.

B. Shop Drawings: Include plans, elevations, sections, details, and attachments to other work.

1. Show location of panel joints.
2. Show location of special-purpose graphics for visual display surfaces.
3. Include sections of typical trim members.
4. Include wiring diagrams for motor-operated, sliding visual display units.

C. Product Test Reports: Based on evaluation of comprehensive tests performed by manufacturer and witnessed by a qualified testing agency, for surface-burning characteristics of vinyl fabrics.

D. Qualification Data: For Installer.

E. Maintenance Data: For visual display surfaces to include in maintenance manuals.

F. Warranties: Special warranties specified in this Section.

1.5 QUALITY ASSURANCE

A. Installer Qualifications: An authorized representative of motor-operated, sliding visual display unit manufacturer for installation and maintenance of units required for this Project.

B. Source Limitations: Obtain each type of visual display surface through one source from a single manufacturer.

C. Product Options: Drawings indicate size, profiles, and dimensional requirements of visual display surfaces and are based on the specific system indicated. Refer to Division 1 Section "Product Requirements."

1. Do not modify intended aesthetic effects, as judged solely by Architect, except with Architect's approval. If modifications are proposed, submit comprehensive explanatory data to Architect for review.

D. Fire-Test-Response Characteristics: Provide fabrics with the surface-burning characteristics indicated, as determined by testing identical products per ASTM E 84 by UL or another testing and inspecting agency acceptable to authorities having jurisdiction. Identify materials with appropriate markings of applicable testing and inspecting agency.

1.6 DELIVERY, STORAGE, AND HANDLING

A. Deliver factory-built visual display boards, including factory-applied trim where indicated, completely assembled in one piece without joints, where possible. If dimensions exceed maximum manufactured panel size, provide two or more pieces of equal length as acceptable to Architect. When overall dimensions require delivery in separate units, prefit components at the factory, disassemble for delivery, and make final joints at the site.

B. Store visual display units vertically with packing materials between each unit.

1.7 PROJECT CONDITIONS

A. Field Measurements: Verify dimensions by field measurements before fabrication and indicate measurements on Shop Drawings.

1. Established Dimensions: Where field measurements cannot be made without delaying the Work, establish dimensions and proceed with fabricating visual display surfaces without field measurements. Coordinate wall construction to ensure that actual dimensions correspond to established dimensions.
2. Allow for trimming and fitting where taking field measurements before fabrication might delay the Work.

1.8 WARRANTY

A. Special Warranty for Porcelain-Enamel Face Sheets: Manufacturer's standard form in which manufacturer agrees to repair or replace porcelain-enamel face sheets that fail in materials or workmanship within specified warranty period.

1. Failures include, but are not limited to, the following:

a. Surfaces lose original writing and erasing qualities.
b. Surfaces become slick or shiny.
c. Surfaces exhibit crazing, cracking, or flaking.

2. Warranty Period: Life of the building.

PART 2 - PRODUCTS

2.1 MANUFACTURERS

A. In other Part 2 articles where titles below introduce lists, the following requirements apply to product selection:

1. Available Manufacturers: Subject to compliance with requirements, manufacturers offering products that may be incorporated into the Work include, but are not limited to, manufacturers specified.

2.2 MATERIALS, GENERAL

A. Porcelain-Enamel Face Sheet: ASTM A 424, enameling-grade steel, uncoated thickness indicated; with exposed face and edges coated with primer, 1.7-to-2.5-mil- thick ground coat, and color cover coat; and concealed face coated with primer and 1.7-to-2.5-mil- thick ground coat.

1. Gloss-Finish Cover Coat: Gloss as indicated; dry-erase markers wipe clean with dry cloth or standard eraser. Minimum 3.0-to-4.0-mil- thick cover coat. Cover and ground coats shall be fused to steel at manufacturer's standard firing temperatures but not less than 1475 deg F.

a. Product: PolyVision Corporation; P^3 ceramicsteel Markerboard.

B. Hardboard: AHA A135.4, tempered.

C. Vinyl Fabric: FS CCC-W-408, Type II, burlap weave; weighing not less than 13 oz./sq. yd.; with flame-spread index of 25 or less when tested according to ASTM E 84.

D. Extruded Aluminum: ASTM B 221, Alloy 6063.

2.3 MARKERBOARD ASSEMBLIES

A. Porcelain-Enamel Markerboard Assembly: Balanced, high-pressure, factory-laminated markerboard assembly of 3-ply construction consisting of backing sheet, core material, and 0.021-inch- thick, porcelain-enamel face sheet with high-gloss finish.

1. Available Manufacturers:

    a. Best-Rite Manufacturing.
    b. Claridge Products & Equipment, Inc.
    c. Egan Visual Inc.
    d. PolyVision Corporation.

2. Hardboard Core: 1/4 inch thick; with 0.005-inch- thick, 0.0129-inch- thick backing.
3. Laminating Adhesive: Manufacturer's standard moisture-resistant thermoplastic type.

B. Markerboard Sheet Assembly: Fabricated from 0.0209-inch- thick, porcelain-enamel face sheets for direct application to wall surface.

2.4 TACK ASSEMBLIES

A. Available Manufacturers:

1. Best-Rite Manufacturing.
2. Claridge Products & Equipment, Inc.
3. Egan Visual Inc.
4. PolyVision Corporation.

B. Vinyl-Fabric-Faced Tack Assembly: 1/4-inch- thick, vinyl-fabric-faced cork sheet factory laminated to 1/4-inch- thick hardboard backing.

2.5 MARKERBOARD AND TACKBOARD ACCESSORIES

A. Aluminum Frames and Trim: Fabricated from not less than 0.062-inch- thick, extruded aluminum; of size and shape indicated.

1. Field-Applied Trim: Manufacturer's standard snap-on trim with no visible screws or exposed joints.

B. Chalktray: Manufacturer's standard, continuous.

1. Solid Type: Extruded aluminum with ribbed section and smoothly curved exposed ends.

C. Map Rail: Provide the following accessories:

1. Display Rail: Continuous and integral with map rail; fabricated from cork approximately 1 to 2 inches wide.
2. End Stops: Located at each end of map rail.
3. Map Hooks: Two map hooks for every 48 inches of map rail or fraction thereof.

2.6 FABRICATION

A. Porcelain-Enamel Visual Display Assemblies: Laminate porcelain-enamel face sheet and backing sheet to core material under heat and pressure with manufacturer's standard flexible, waterproof adhesive.

B. Visual Display Boards: Factory assemble visual display boards, unless otherwise indicated.

1. Where factory-applied trim is indicated, trim shall be assembled and attached to visual display boards at manufacturer's factory before shipment.

C. Factory-Assembled Visual Display Units: Coordinate factory-assembled units with trim and accessories indicated. Join parts with a neat, precision fit.

1. Make joints only where total length exceeds maximum manufactured length. Fabricate with minimum number of joints, balanced around center of board, as acceptable to Architect.
2. Provide manufacturer's standard mullion trim at joints between markerboards and tackboards of combination units.
3. Where size of visual display boards or other conditions require support in addition to normal trim, provide structural supports or modify trim as indicated or as selected by Architect from manufacturer's standard structural support accessories to suit conditions indicated.

D. Aluminum Frames and Trim: Fabricate units straight and of single lengths, keeping joints to a minimum. Miter corners to neat, hairline closure.

1. Where factory-applied trim is indicated, trim shall be assembled and attached to visual display units at manufacturer's factory before shipment.

2.7 ALUMINUM FINISHES

A. Comply with NAAMM's "Metal Finishes Manual for Architectural and Metal Products" for recommendations for applying and designating finishes.

B. Protect mechanical finishes on exposed surfaces from damage by applying a strippable, temporary protective covering before shipping.

C. Finish designations prefixed by AA comply with the system established by the Aluminum Association for designating aluminum finishes.

D. Class II, Clear Anodic Finish: AA-M12C22A31 (Mechanical Finish: nonspecular as fabricated; Chemical Finish: etched, medium matte; Anodic Coating: Architectural Class II, clear coating 0.010 mm or thicker) complying with AAMA 611.

PART 3 - EXECUTION

3.1 EXAMINATION

A. Examine substrates and conditions, with Installer present, for compliance with requirements for installation tolerances, surface conditions of wall, and other conditions affecting performance.

1. For the record, prepare written report, endorsed by Installer, listing conditions detrimental to performance of work.

B. Examine roughing-in for electrical power systems to verify actual locations of connections before installation of motor-operated, sliding visual display units.

C. Examine walls and partitions for proper backing for visual display surfaces.

D. Examine walls and partitions for suitable framing depth where sliding visual display units will be installed.

E. Proceed with installation only after unsatisfactory conditions have been corrected.

3.2 PREPARATION

A. Remove dirt, scaling paint, projections, and depressions that will affect smooth, finished surfaces of visual display boards.

B. Prepare surfaces to achieve a smooth, dry, clean surface free of flaking, unsound coatings, cracks, defects, and substances that will impair bond between visual display boards and surfaces.

1. Seal wall surfaces indicated to receive visual display fabric.

C. Prepare recesses for sliding visual display units as required by type and size of unit.

3.3 INSTALLATION, GENERAL

A. General: Install visual display surfaces in locations and at mounting heights indicated on Drawings, or if not indicated, at heights indicated below. Keep perimeter lines straight, level, and plumb. Provide grounds, clips, backing materials, adhesives, brackets, anchors, trim, and accessories necessary for complete installation.

3.4 INSTALLATION OF FACTORY-FABRICATED VISUAL DISPLAY UNITS

A. Visual Display Boards: Attach visual display boards to wall surfaces with egg-size adhesive gobs at 16 inches o.c. horizontally and vertically.

B. Visual Display Boards: Attach concealed clips, hangers, and grounds to wall surfaces and to visual display boards with fasteners at not more than 16 inches o.c. Secure both top and bottom of boards to walls.

1. Field-Applied Aluminum Trim: Attach trim over edges of visual display boards and conceal grounds and clips. Attach trim to boards with fasteners at not more than 24 inches o.c.

    a. Attach chalktrays to boards with fasteners at not more than 12 inches o.c.

C. Display Rails: Install rails in locations and at mounting heights indicated on Drawings, or if not indicated, at height indicated below. Attach to wall surface with fasteners at not more than 16 inches o.c.

3.5 CLEANING AND PROTECTION

A. Clean visual display surfaces according to manufacturer's written instructions. Attach one cleaning label to visual display surface in each room.

B. Touch up factory-applied finishes to restore damaged or soiled areas.

C. Cover and protect visual display surfaces after installation and cleaning.

3.6 VISUAL DISPLAY SURFACE SCHEDULE

A. Visual Display Board: Factory assembled.

1. Markerboard: Porcelain-enamel markerboard assembly.

    a. Color: White.

2. Field-Applied Aluminum Trim: With clear anodic finish.
3. Accessories:

    a. Chalktray: Solid type.
    b. Map rail with end stops and map hooks.

4. Width: As indicated on Drawings.
5. Height: As indicated on Drawings.
6. Mounting: Wall, mechanically fastened.
7. Mounting Height: As indicated on Drawings.

B. Tackboard: Factory assembled.

1. Tack Surface: Vinyl-fabric-faced tack assembly.

    a. Vinyl Fabric: As selected by Architect from manufacturer's full line.

2. Edges: Concealed by trim.

    a. Field-Applied Aluminum Trim: With clear anodic finish.

END OF SECTION 10101

SECTION 10155
TOILET COMPARTMENTS

PART 1 - GENERAL

1.1 RELATED DOCUMENTS

A. Drawings and general provisions of the Contract, including General and Supplementary Conditions and Division 1 Specification Sections, apply to this Section.

1.2 SUMMARY

A. This Section includes phenolic-core units as follows:

1. Toilet Enclosures: Overhead braced.
2. Entrance Screens: Overhead braced.
3. Urinal Screens: Wall hung.

B. Related Sections include the following:

1. Division 6 Section "Miscellaneous Carpentry" for blocking.
2. Division 10 "Toilet and Bath Accessories" for toilet tissue dispensers, grab bars, purse shelves, and similar accessories.

1.3 SUBMITTALS

A. Product Data: For each type of product indicated. Include construction details, material descriptions, dimensions of individual components and profiles, and finishes.

B. Shop Drawings: Include plans, elevations, sections, details, and attachments to other work. Show contractor field verified layouts for existing toilet room partition replacements.

C. Samples for Verification: Of each type of color and finish required for units, prepared on 6-inch- square Samples of same thickness and material indicated for Work.

1.4 QUALITY ASSURANCE

A. Comply with requirements in CID-A-A-60003, "Partitions, Toilets, Complete."

1.5 PROJECT CONDITIONS

A. Field Measurements: Verify actual locations of walls, columns, ceilings, and other construction contiguous with toilet compartments by field measurements before fabrication and indicate measurements on Shop Drawings.

1. Established Dimensions: Where field measurements cannot be made without delaying the Work, establish dimensions and proceed with fabricating toilet compartments without field measurements. Coordinate wall, floor, ceilings, and other contiguous construction to ensure that actual dimensions correspond to established dimensions.

PART 2 - PRODUCTS

2.1 SOLID PHENOLIC-SOLID COLOR REINFORCED COMPOSITE (SCRC) UNITS

A. Available Manufacturers: Subject to compliance with requirements, manufacturers offering products that may be incorporated into the Work include, but are not limited to, the following:

1. Bobrick Washroom Equipment, Inc. – Sierra Series
2. Pre-approved equal.

B. Door, Panel and Pilaster Construction: SCRC panel material with eased and polished edges. Provide minimum 3/4-inch- thick doors and pilasters and minimum 1/2-inch- thick panels.

1. Color: Manufacturer's standard black.

C. Pilaster Shoes: Stainless steel, ASTM A 666, Type 304, not less than 0.0312 inch specified thickness and 3 inches high, finished to match hardware.

D. Brackets (Fittings):

1. Full-Height (Continuous) Type: Manufacturer's standard design; aluminum.

2.2 ACCESSORIES

A. Hardware and Accessories: Manufacturer's standard design, heavy-duty operating hardware and accessories.

1. Material: Heavy gauge 304 satin-finish stainless steel.

B. Overhead Bracing: Manufacturer's standard continuous, extruded-aluminum head rail with antigrip profile and in manufacturer's standard finish.

C. Anchorages and Fasteners: Manufacturer's standard exposed fasteners of stainless steel or chrome-plated steel or brass, finished to match hardware, with theft-resistant-type heads. Provide sex-type bolts for through-bolt applications. For concealed anchors, use hot-dip galvanized or other rust-resistant, protective-coated steel.

2.3 FABRICATION

A. Overhead-Braced Units: Provide manufacturer's standard corrosion-resistant supports, leveling mechanism, fasteners, and anchors at pilasters to suit floor conditions. Make provisions for setting and securing continuous head rail at top of each pilaster. Provide shoes at pilasters to conceal supports and leveling mechanism.

B. Doors: Unless otherwise indicated, provide 24-inch- wide in-swinging doors for standard toilet compartments and 36-inch- wide out-swinging doors with a minimum 32-inch- wide clear opening for compartments indicated to be accessible to people with disabilities.

1. Hinges: Manufacturer's standard self-closing type that can be adjusted to hold doors open at any angle up to 90 degrees.
2. Latch and Keeper: Manufacturer's standard surface-mounted latch unit designed for emergency access and with combination rubber-faced door strike and keeper. Provide units that comply with accessibility requirements of authorities having jurisdiction at compartments indicated to be accessible to people with disabilities.
3. Coat Hook: Manufacturer's standard hook.
4. Door Bumper: Manufacturer's standard rubber-tipped bumper at out-swinging doors and entrance screen doors.
5. Door Pull: Manufacturer's standard unit at out-swinging doors that complies with accessibility requirements of authorities having jurisdiction. Provide units on both sides of doors at compartments indicated to be accessible to people with disabilities.

PART 3 - EXECUTION

3.1 INSTALLATION

A. General: Comply with manufacturer's written installation instructions. Install units rigid, straight, level, and plumb. Secure units in position with manufacturer's recommended anchoring devices.

1. Maximum Clearances:

a. Pilasters and Panels: 1/2 inch.
b. Panels and Walls: 1 inch.

B. Overhead-Braced Units: Secure pilasters to floor and level, plumb, and tighten. Secure continuous head rail to each pilaster with not less than two fasteners. Hang doors to align tops of doors with tops of panels and adjust so tops of doors are parallel with overhead brace when doors are in closed position.

C. Wall-Hung Urinal Screens: Attach with anchoring devices to suit supporting structure. Set units level and plumb and to resist lateral impact.

3.2 ADJUSTING

A. Hardware Adjustment: Adjust and lubricate hardware according to manufacturer's written instructions for proper operation. Set hinges on in-swinging doors to hold doors open approximately 30 degrees from closed position when unlatched. Set hinges on out-swinging doors and doors in entrance screens to return doors to fully closed position.

END OF SECTION 10155

SECTION 10505
METAL LOCKERS

PART 1 - GENERAL

1.1 RELATED DOCUMENTS

A. Drawings and general provisions of the Contract, including General and Supplementary Conditions and Division 1 Specification Sections, apply to this Section.

1.2 SUMMARY

A. This Section includes the following:

1. Knocked-down, quiet metal lockers.

B. Related Sections include the following:

1. Division 6 Section "Miscellaneous Carpentry" for concealed wood support base, furring, blocking, and shims required for installing metal lockers and concealed within other construction before metal locker installation.

1.3 DEFINITIONS

A. Uncoated Steel Sheet Thicknesses: Indicated as the minimum thicknesses.

1.4 SUBMITTALS

A. Product Data: Include construction details, material descriptions, dimensions of individual components and profiles, and finishes for each type of metal locker and bench.

B. Shop Drawings: Include plans, elevations, sections, details, and attachments to other work.

1. Show sloping tops, filler panels and other accessories.
2. Include locker identification system.

C. Maintenance Data: For adjusting, repairing, and replacing locker doors and latching mechanisms to include in maintenance manuals.

D. Warranty: Special warranty specified in this Section.

1.5 QUALITY ASSURANCE

A. Installer Qualifications: An authorized representative of metal locker manufacturer for installation and maintenance of units required for this Project.

B. Source Limitations: Obtain metal lockers and accessories through one source from a single manufacturer.

C. Product Options: Drawings indicate size, profiles, and dimensional requirements of metal lockers and are based on the specific system indicated. Refer to Division 1 Section "Product Requirements."

1. Do not modify intended aesthetic effects, as judged solely by Architect, except with Architect's approval. If modifications are proposed, submit comprehensive explanatory data to Architect for review.

D. Regulatory Requirements: Where metal lockers are indicated to comply with accessibility requirements, comply with the U.S. Architectural & Transportation Barriers Compliance Board's "Americans with Disabilities Act (ADA), Accessibility Guidelines for Buildings and Facilities (ADAAG)."

1. Provide not less than 1 shelf located no higher than 48 inches above the floor for forward reach.
2. Provide 1 shelf located at bottom of locker no lower than 15 inches above the floor for forward reach.
3. Provide hardware that does not require tight grasping, pinching, or twisting of the wrist, and that operates with a force of not more than 5 lbf.

E. Preinstallation Conference: Conduct conference at Project site to comply with requirements in Division 1 Section "Project Management and Coordination."

1.6 DELIVERY, STORAGE, AND HANDLING

A. Do not deliver metal lockers until spaces to receive them are clean, dry, and ready for metal locker installation.

B. Deliver master and control keys, and combination control charts to Owner by registered mail or overnight package service.

1.7 PROJECT CONDITIONS

A. Field Measurements: Verify the following by field measurements before fabrication and indicate measurements on Shop Drawings:

1. Concealed framing, blocking, and reinforcements that support metal lockers before they are enclosed.
2. Recessed openings.
3. Established Dimensions: Where field measurements cannot be made without delaying the Work, establish recessed opening dimensions and proceed with fabricating metal lockers without field measurements. Coordinate wall and floor construction to ensure that actual recessed opening dimensions correspond to established dimensions.

1.8 COORDINATION

A. Coordinate size and location of concrete bases for metal lockers.

B. Coordinate sizes and locations of framing, blocking, furring, reinforcements, and other related units of Work specified in other Sections to ensure that metal lockers can be supported and installed as indicated.

1.9 WARRANTY

A. Special Warranty: Manufacturer's standard form in which manufacturer agrees to repair or replace components of metal lockers that fail in materials or workmanship, excluding finish, within specified warranty period.

1. Failures include, but are not limited to, the following:

   a. Structural failures.
   b. Faulty operation of latches and other door hardware.

2. Damage from deliberate destruction and vandalism is excluded.
3. Warranty Period for Knocked-Down Metal Lockers: Two years from date of Substantial Completion.

B. Furnish extra materials described below, before construction begins, that match products installed and that are packaged with protective covering for storage and identified with labels describing contents.

1. Full-size units of the following metal locker hardware items equal to 10 percent of amount installed for each type and finish installed, but no fewer than 5 units:

   a. Locks.
   b. Identification plates.
   c. Hooks.

PART 2 - PRODUCTS

2.1 MANUFACTURERS

A. In other Part 2 articles where titles below introduce lists, the following requirements apply to product selection:

1. Products: Subject to compliance with requirements, provide one of the products specified.

2.2 MATERIALS

A. Cold-Rolled Steel Sheet: ASTM A 1008, Commercial Steel (CS) Type B, suitable for exposed applications.

B. Fasteners: Zinc- or nickel-plated steel, slotless-type exposed bolt heads, and self-locking nuts or lock washers for nuts on moving parts.

C. Anchors: Select material, type, size, and finish required for secure anchorage to each substrate.

1. Provide nonferrous-metal or hot-dip galvanized anchors and inserts on inside face of exterior walls and elsewhere as required for corrosion resistance.

2. Provide toothed-steel or lead expansion sleeves for drilled-in-place anchors.

2.3 KNOCKED-DOWN, QUIET METAL LOCKERS

A. Products:

1. Art Metal Products, Div. of Fort Knox Storage Co.; Standard Quiet Lockers.
2. List Industries Inc.; Standard Quiet Lockers.
3. Republic Storage Systems Company; Quiet Lockers.

B. Locker Arrangement: Single tier.

C. Body: Assembled by riveting or bolting body components together. Fabricate from unperforated, cold-rolled steel sheet with thicknesses as follows:

1. Tops, Bottoms, and Intermediate Dividers: 0.0209 inch, with single bend at sides.
2. Backs and Sides: 0.0209 inch thick, with full-height, double-flanged connections.
3. Shelves: 0.0209 inch thick, with double bend at front and single bend at sides and back.

D. Frames: Channel formed; fabricated from 0.0528-inch- thick, cold-rolled steel sheet; lapped and factory welded at corners; with top and bottom main frames factory welded into vertical main frames. Form continuous, integral door strike full height on vertical main frames.

1. Cross Frames between Tiers: Channel formed and fabricated from same material as main frames; welded to vertical frame members.

E. Doors: One-piece; fabricated from 0.0528-inch- thick, cold-rolled steel sheet; formed into channel shape with double bend at vertical edges, and with right-angle single bend at horizontal edges.

1. Doors less than 12 inches wide may be fabricated from 0.0428-inch- thick, cold-rolled steel sheet.
2. Reinforcement: Manufacturer's standard reinforcing angles, channels, or stiffeners for doors more than 15 inches wide; welded to inner face of doors.
3. Stiffeners: Manufacturer's standard full-height stiffener fabricated from 0.0428-inch-thick, cold-rolled steel sheet; welded to inner face of doors.
4. Sound-Dampening Panels: Manufacturer's standard, designed to stiffen doors and reduce sound levels when doors are closed, of die-formed metal with full perimeter flange and sound-dampening material; welded to inner face of doors.
5. Door Style: Unperforated panel.

    a. Concealed Vents: Slotted perforations in top and bottom horizontal return flanges of doors.

F. Hinges: Self-closing; welded to door and attached to door frame with not less than 2 factory-installed rivets per hinge that are completely concealed and tamper resistant when door is closed; fabricated to swing 180 degrees.

1. Knuckle Hinges: Steel, full loop, 5 or 7 knuckles, tight pin; minimum 2 inches high. Provide not less than 3 hinges for each door more than 42 inches high.

G. Recessed Door Handle and Latch: Stainless-steel cup with integral door pull, recessed so locking device does not protrude beyond face of door; pry resistant.

1. Multipoint Latching: Finger-lift latch control designed for use with built-in combination locks, built-in key locks, or padlocks; positive automatic and prelocking.

    a. Latch Hooks: Equip doors 48 inches and higher with 3 latch hooks and doors less than 48 inches high with 2 latch hooks; fabricated from minimum 0.0966-inch- thick steel; welded or riveted to full-height door strikes; with resilient silencer on each latch hook.
    b. Latching Mechanism: Manufacturer's standard rattle-free latching mechanism and moving components isolated with vinyl or nylon to prevent metal-to-metal contact, and incorporating a prelocking device that allows locker door to be locked while door is open and then closed without unlocking or damaging lock or latching mechanism.

H. Combination Padlocks: Provided by Owner.

I. Built-in Combination Locks: Key-controlled, three-number dialing combination locks; capable of at least five combination changes made automatically with a control key.

1. Bolt Operation: Automatically locking spring bolt.

J. Equipment: Equip each metal locker with identification plate and the following, unless otherwise indicated:

1. Single-Tier Units: Shelf, one double-prong ceiling hook, and two single-prong wall hooks.

K. Accessories:

1. Continuous Sloping Tops: Fabricated from cold-rolled steel sheet, 0.0428 inch thick.

    a. Closures: Vertical-end type.
    b. Sloped top corner fillers, mitered.

2. Filler Panels: Fabricated from cold-rolled steel sheet, 0.0428 inch thick.
3. Boxed End Panels: Fabricated from 0.0528-inch- thick, cold-rolled steel sheet.

L. Finish: Baked enamel or powder coat.

1. Color(s): As selected by Architect from manufacturer's full range.

2.4 FABRICATION

A. General: Fabricate metal lockers square, rigid, and without warp; with metal faces flat and free of dents or distortion. Make exposed metal edges free of sharp edges and burrs, and safe to touch.

1. Form body panels, doors, shelves, and accessories from one-piece steel sheet, unless otherwise indicated.
2. Provide fasteners, filler plates, supports, clips, and closures as required for a complete installation.

B. Unit Principle: Fabricate each metal locker with an individual door and frame; individual top, bottom, and back; and common intermediate uprights separating compartments.

C. Knocked-Down Construction: Fabricate metal lockers for nominal assembly at Project site using nuts, bolts, screws, or rivets. Factory weld frame members together to form a rigid, one-piece assembly.

D. Hooks: Manufacturer's standard ball-pointed type, aluminum or steel; zinc plated.

E. Identification Plates: Manufacturer's standard etched, embossed, or stamped aluminum plates; with numbers and letters at least 3/8 inch high.

F. Continuous Sloping Tops: Fabricated in lengths as long as practicable, without visible fasteners at splice locations; finished to match lockers.

1. Sloped top corner fillers, mitered.

G. Filler Panels: Fabricated in an unequal leg angle shape; finished to match lockers. Provide slip joint filler angle formed to receive filler panel.

H. Boxed End Panels: Fabricated with 1-inch- wide edge dimension, and designed for concealing fasteners and holes at exposed ends of nonrecessed metal lockers; finished to match lockers.

1. Provide one-piece panels for double-row (back-to-back) locker ends.

2.5 STEEL SHEET FINISHES

A. General: Comply with NAAMM's "Metal Finishes Manual for Architectural and Metal Products" for recommendations for applying and designating finishes.

B. Factory finish steel surfaces and accessories except stainless-steel and chrome-plated surfaces.

C. Surface Preparation: Clean surfaces of dirt, oil, grease, mill scale, rust, and other contaminants that could impair paint bond. Use manufacturer's standard methods.

D. Baked-Enamel Finish: Immediately after cleaning, pretreating, and phosphatizing, apply manufacturer's standard thermosetting baked-enamel finish. Comply with paint manufacturer's written instructions for application, baking, and minimum dry film thickness.

E. Powder-Coat Finish: Immediately after cleaning and pretreating, electrostatically apply manufacturer's standard baked-polymer thermosetting powder finish. Comply with resin manufacturer's written instructions for application, baking, and minimum dry film thickness.

PART 3 - EXECUTION

3.1 EXAMINATION

A. Examine walls, floors, and support bases, with Installer present, for compliance with requirements for installation tolerances and other conditions affecting performance of work.

1. For the record, prepare written report, endorsed by Installer, listing conditions detrimental to performance of work.

B. Proceed with installation only after unsatisfactory conditions have been corrected.

3.2 INSTALLATION

A. General: Install level, plumb, and true; shim as required, using concealed shims.

1. Anchor locker runs at ends and at intervals recommended by manufacturer, but not more than 36 inches o.c. Install anchors through backup reinforcing plates, channels, or blocking as required to prevent metal distortion, using concealed fasteners.
2. Anchor single rows of metal lockers to walls near top of lockers and to floor.
3. Anchor back-to-back metal lockers to floor.

B. Knocked-Down Metal Lockers: Assemble knocked-down metal lockers with standard fasteners, with no exposed fasteners on door faces or face frames.

C. Equipment and Accessories: Fit exposed connections of trim, fillers, and closures accurately together to form tight, hairline joints, with concealed fasteners and splice plates.

1. Attach hooks with at least two fasteners.
2. Attach door locks on doors using security-type fasteners.
3. Identification Plates: Identify metal lockers with identification indicated on Drawings.

    a. Attach plates to each locker door, near top, centered, with at least two aluminum rivets.

4. Attach filler panels with concealed fasteners. Locate fillers panels where indicated on Drawings.
5. Attach sloping top units to metal lockers, with closures at exposed ends.
6. Attach boxed end panels with concealed fasteners to conceal exposed ends of nonrecessed metal lockers.

3.3 ADJUSTING, CLEANING, AND PROTECTION

A. Clean, lubricate, and adjust hardware. Adjust doors and latches to operate easily without binding. Verify that integral locking devices operate properly.

B. Protect metal lockers from damage, abuse, dust, dirt, stain, or paint. Do not permit metal locker use during construction.

C. Touch up marred finishes, or replace metal lockers that cannot be restored to factory-finished appearance. Use only materials and procedures recommended or furnished by metal locker manufacturer.

3.4 METAL LOCKER SCHEDULE

MWL-1 8" x 12" x 72" single tier quiet metal lockers with combination lock.

END OF SECTION 10505

SECTION 10520
FIRE-PROTECTION SPECIALTIES

PART 1 - GENERAL

1.1 RELATED DOCUMENTS

A. Drawings and general provisions of the Contract, including General and Supplementary Conditions and Division 1 Specification Sections, apply to this Section.

1.2 SUMMARY

A. This Section includes the following:

1. Portable fire extinguishers.
2. Fire-protection cabinets for the following:

    a. Portable fire extinguishers.

B. Related Sections include the following:

1. Division 7 Section "Through-Penetration Firestop Systems" for firestopping sealants at fire-rated cabinets.
2. Division 15 Section "Commercial Kitchen Hoods" for fire extinguishing systems provided as part of commercial kitchen exhaust hoods.

1.3 SUBMITTALS

A. Product Data: Include construction details, material descriptions, dimensions of individual components and profiles, and finishes for fire-protection cabinets.

1. Fire Extinguishers: Include rating and classification.
2. Fire-Protection Cabinets: Include roughing-in dimensions, details showing mounting methods, relationships of box and trim to surrounding construction, door hardware, cabinet type, trim style, and panel style.

B. Maintenance Data: For fire extinguishers and fire-protection cabinets to include in maintenance manuals.

1.4 QUALITY ASSURANCE

A. Source Limitations: Obtain fire extinguishers and fire-protection cabinets through one source from a single manufacturer.

B. NFPA Compliance: Fabricate and label fire extinguishers to comply with NFPA 10, "Portable Fire Extinguishers."

C. Fire Extinguishers: Listed and labeled for type, rating, and classification by an independent testing agency acceptable to authorities having jurisdiction.

1. Provide fire extinguishers approved, listed, and labeled by FMG.

D. Fire-Rated Fire-Protection Cabinets: Listed and labeled to comply with requirements of ASTM E 814 for fire-resistance rating of walls where they are installed.

1.5 COORDINATION

A. Coordinate size of fire-protection cabinets to ensure that type and capacity of fire extinguishers indicated are accommodated.

1.6 SEQUENCING

A. Apply vinyl lettering on field-painted fire-protection cabinets after painting is complete.

1.7 WARRANTY

A. Special Warranty: Manufacturer's standard form in which manufacturer agrees to repair or replace components of portable fire extinguishers that fail in materials or workmanship within specified warranty period.

1. Failures include, but are not limited to, the following:

a. Failure of hydrostatic test according to NFPA 10.
b. Faulty operation of valves or release levers.

2. Warranty Period: Six years from date of Substantial Completion.

PART 2 - PRODUCTS

2.1 MANUFACTURERS

A. In other Part 2 articles where titles below introduce lists, the following requirements apply to product selection:

1. Available Manufacturers: Subject to compliance with requirements, manufacturers offering products that may be incorporated into the Work include, but are not limited to, manufacturers specified.

2.2 MATERIALS

A. Cold-Rolled Steel Sheet: ASTM A 1008/A 1008M, Commercial Steel (CS), Type B.

B. Aluminum: Alloy and temper recommended by aluminum producer and manufacturer for type of use and finish indicated, and as follows:

1. Sheet: ASTM B 209.
2. Extruded Shapes: ASTM B 221.

C. Tempered Float Glass: ASTM C 1048, Kind FT, Condition A, Type I, Quality q3, 3 mm thick, Class 1 (clear).

2.3 PORTABLE FIRE EXTINGUISHERS

A. Available Manufacturers:

1. Badger Fire Protection.
2. JL Industries, Inc.
3. Kidde Fyrnetics.
4. Larsen's Manufacturing Company.

B. General: Provide fire extinguishers of type, size, and capacity for each fire-protection cabinet and mounting bracket indicated.

1. Valves: Manufacturer's standard.
2. Handles and Levers: Manufacturer's standard.
3. Instruction Labels: Include pictorial marking system complying with NFPA 10, Appendix B and bar coding for documenting fire extinguisher location, inspections, maintenance, and recharging.

C. Multipurpose Dry-Chemical Type in Steel Container: UL-rated 4-A:60-B:C, 10-lb nominal capacity, with monoammonium phosphate-based dry chemical in enameled-steel container.

D. Multipurpose Dry-Chemical Type in Aluminum Container: UL-rated 4-A:60-B:C, 10-lb nominal capacity, with monoammonium phosphate-based dry chemical in enameled-aluminum container.

2.4 FIRE-PROTECTION CABINET

A. Available Manufacturers:

1. JL Industries, Inc.
2. Kidde Fyrnetics.
3. Larsen's Manufacturing Company.

B. Cabinet Type: Suitable for fire extinguisher.

C. Cabinet Construction: Nonrated and 1-hour fire rated.

D. Cabinet Material: Enameled-steel sheet.

E. Recessed Cabinet: Cabinet box recessed in walls of sufficient depth to suit style of trim indicated.

1. Exposed Flat Trim: One-piece combination trim and perimeter door frame overlapping surrounding wall surface with exposed trim face and wall return at outer edge (backbend) of 1/4 to 5/16 inch.

F. Semirecessed Cabinet: Cabinet box partially recessed in walls of shallow depth to suit style of trim indicated; with one-piece combination trim and perimeter door frame overlapping surrounding wall surface with exposed trim face and wall return at outer edge (backbend).

1. Rolled-Edge Trim: 2-1/2-inch or 4-inch as required for wall type backbend depth.

G. Cabinet Trim Material: Same material and finish as door.

H. Door Material: Steel sheet.

I. Door Style: Vertical duo panel with frame.

J. Door Glazing: Tempered float glass (clear).

K. Door Hardware: Manufacturer's standard door-operating hardware of proper type for cabinet type, trim style, and door material and style indicated.

1. Provide recessed door pull and friction latch.
2. Provide continuous hinge, of same material and finish as trim, permitting door to open 180 degrees.

L. Accessories:

1. Identification: Lettering complying with authorities having jurisdiction for letter style, size, spacing, and location. Locate as indicated by Architect.

a. Identify fire extinguisher in fire-protection cabinet with the words "FIRE EXTINGUISHER."

1) Location: Applied to cabinet door.
2) Application Process: Pressure-sensitive vinyl letters.
3) Lettering Color: Red.
4) Orientation: Vertical.

M. Finishes:

1. Manufacturer's standard baked-enamel paint for the following:

a. Exterior of cabinet door, and trim, except for those surfaces indicated to receive another finish.
b. Interior of cabinet and door.

2. Steel: Baked enamel.

a. Color and Texture: As selected by Architect from manufacturer's full range.

2.5 MOUNTING BRACKETS

A. Available Manufacturers:

1. Badger Fire Protection.
2. JL Industries, Inc.
3. Larsen's Manufacturing Company.

B. Mounting Brackets: Manufacturer's standard galvanized steel, designed to secure fire extinguisher to wall or structure, of sizes required for types and capacities of fire extinguishers indicated, with plated or baked-enamel finish.

1. Color: Red.

C. Identification: Lettering complying with authorities having jurisdiction for letter style, size, spacing, and location. Locate as indicated by Architect.

1. Identify bracket-mounted fire extinguishers with the words "FIRE EXTINGUISHER" in red letter decals applied to mounting surface.

a. Orientation: Vertical.

2.6 FABRICATION

A. Fire-Protection Cabinets: Provide manufacturer's standard box (tub), with trim, frame, door, and hardware to suit cabinet type, trim style, and door style indicated.

1. Weld joints and grind smooth.
2. Construct fire-rated cabinets with double walls fabricated from 0.0428-inch- thick, cold-rolled steel sheet lined with minimum 5/8-inch- thick, fire-barrier material.

a. Provide factory-drilled mounting holes.

B. Cabinet Doors: Fabricate doors according to manufacturer's standards, from materials indicated and coordinated with cabinet types and trim styles selected.

1. Fabricate door frames with tubular stiles and rails and hollow-metal design, minimum 1/2 inch thick.
2. Miter and weld perimeter door frames.

C. Cabinet Trim: Fabricate cabinet trim in one piece with corners mitered, welded, and ground smooth.

2.7 FINISHES, GENERAL

A. Comply with NAAMM's "Metal Finishes Manual for Architectural and Metal Products" for recommendations for applying and designating finishes.

B. Protect mechanical finishes on exposed surfaces from damage by applying a strippable, temporary protective covering before shipping.

C. Finish fire-protection cabinets after assembly.

D. Appearance of Finished Work: Variations in appearance of abutting or adjacent pieces are acceptable if they are within one-half of the range of approved Samples. Noticeable variations in the same piece are not acceptable. Variations in appearance of other components are

acceptable if they are within the range of approved Samples and are assembled or installed to minimize contrast.

2.8 ALUMINUM FINISHES

A. Finish designations prefixed by AA comply with the system established by the Aluminum Association for designating aluminum finishes.

B. Class II, Clear Anodic Finish: AA-M12C22A31 (Mechanical Finish: nonspecular as fabricated; Chemical Finish: etched, medium matte; Anodic Coating: Architectural Class II, clear coating 0.010 mm or thicker) complying with AAMA 611.

C. Baked-Enamel Finish: AA-C12C42R1x (Chemical Finish: cleaned with inhibited chemicals; Chemical Finish: acid-chromate-fluoride-phosphate conversion coating; Organic Coating: as specified below). Apply baked enamel complying with paint manufacturer's written instructions for cleaning, conversion coating, and painting.

1. Organic Coating: Thermosetting, modified-acrylic enamel primer/topcoat system complying with AAMA 2603 except with a minimum dry film thickness of 1.5 mils, medium gloss.

2.9 STEEL FINISHES

A. Surface Preparation: Clean surfaces of dirt, oil, grease, mill scale, rust, and other contaminants that could impair paint bond using manufacturer's standard methods.

B. Baked-Enamel Finish: Immediately after cleaning and pretreating, apply manufacturer's standard two-coat, baked-enamel finish consisting of prime coat and thermosetting topcoat. Comply with paint manufacturer's written instructions for applying and baking to achieve a minimum dry film thickness of 2 mils.

PART 3 - EXECUTION

3.1 EXAMINATION

A. Examine walls and partitions for suitable framing depth and blocking where recessed and semirecessed cabinets will be installed.

B. Examine fire extinguishers for proper charging and tagging.

1. Remove and replace damaged, defective, or undercharged units.

C. Proceed with installation only after unsatisfactory conditions have been corrected.

3.2 PREPARATION

A. Prepare recesses for recessed and semirecessed fire-protection cabinets as required by type and size of cabinet and trim style.

3.3 INSTALLATION

A. General: Install fire-protection specialties in locations and at mounting heights indicated or, if not indicated, at heights acceptable to authorities having jurisdiction.

1. Fire-Protection Cabinets: 54 inches above finished floor to top of cabinet.
2. Mounting Brackets: 54 inches above finished floor to top of fire extinguisher.

B. Fire-Protection Cabinets: Fasten fire-protection cabinets to structure, square and plumb.

1. Unless otherwise indicated, provide recessed fire-protection cabinets. If wall thickness is not adequate for recessed cabinets, provide semirecessed fire-protection cabinets.

C. Identification: Apply vinyl lettering at locations indicated.

3.4 ADJUSTING AND CLEANING

A. Remove temporary protective coverings and strippable films, if any, as fire-protection specialties are installed, unless otherwise indicated in manufacturer's written installation instructions.

B. Adjust fire-protection cabinet doors to operate easily without binding. Verify that integral locking devices operate properly.

C. On completion of fire-protection cabinet installation, clean interior and exterior surfaces as recommended by manufacturer.

D. Touch up marred finishes, or replace fire-protection cabinets that cannot be restored to factory-finished appearance. Use only materials and procedures recommended or furnished by fire-protection cabinet manufacturer.

E. Replace fire-protection cabinets that have been damaged or have deteriorated beyond successful repair by finish touchup or similar minor repair procedures.

END OF SECTION 10520

SECTION 10801
TOILET AND BATH ACCESSORIES

PART 1 - GENERAL

1.1 RELATED DOCUMENTS

A. Drawings and general provisions of the Contract, including General and Supplementary Conditions and Division 1 Specification Sections, apply to this Section.

1.2 SUMMARY

A. This Section includes the following:

1. Mirrors.
2. Grab bars.

B. Owner-Furnished Material:

1. Soap dish.
2. Paper towel dispenser.
3. Waste receptacles.
4. Sanitary napkin disposal.
5. Toilet paper dispenser.

1.3 SUBMITTALS

A. Product Data: For each type of product indicated. Include the following:

1. Construction details and dimensions.
2. Anchoring and mounting requirements, including requirements for cutouts in other work and substrate preparation.
3. Material and finish descriptions.
4. Features that will be included for Project.
5. Manufacturer's warranty.

B. Product Schedule: Indicating types, quantities, sizes, and installation locations by room of each accessory required.

1. Identify locations using room designations indicated on Drawings.
2. Identify products using designations indicated on Drawings.

C. Maintenance Data: For toilet and bath accessories to include in maintenance manuals.

1.4 COORDINATION

A. Coordinate accessory locations with other work to prevent interference with clearances required for access by people with disabilities, and for proper installation, adjustment, operation, cleaning, and servicing of accessories.

B. Deliver inserts and anchoring devices set into concrete or masonry as required to prevent delaying the Work.

PART 2 - PRODUCTS

2.1 MATERIALS

A. Stainless Steel: ASTM A 666, Type 304, 0.0312-inch minimum nominal thickness, unless otherwise indicated.

B. Steel Sheet: ASTM A 1008/A 1008M, Designation CS (cold rolled, commercial steel), 0.0359-inch minimum nominal thickness.

C. Galvanized Steel Sheet: ASTM A 653/A 653M, with G60 hot-dip zinc coating.

D. Galvanized Steel Mounting Devices: ASTM A 153/A 153M, hot-dip galvanized after fabrication.

E. Fasteners: Screws, bolts, and other devices of same material as accessory unit and tamper-and-theft resistant where exposed, and of galvanized steel where concealed.

2.2 PUBLIC-USE WASHROOM ACCESSORIES

A. Manufacturers: Subject to compliance with requirements, provide products by one of the following:

1. A & J Washroom Accessories, Inc.
2. American Specialties, Inc.
3. Bobrick Washroom Equipment, Inc.
4. Bradley Corporation.
5. General Accessory Manufacturing Co. (GAMCO).

B. Toilet Tissue (Roll) Dispenser **TA-01**:

1. Provided and installed by Owner

C. Paper Towel Dispenser **TA-02**:

1. Provided and installed by Owner

D. Liquid-Soap Dispenser **TA-03**:

1. Provided and installed by Owner

E. Sanitary-Napkin Disposal Unit **TA-04**:

1. Provided and installed by Owner.

F. Mirror Unit **TA-05**:

1. Basis-of-Design Product: Bobrick B-165-24x36
2. Frame: Stainless-steel channel.

    a. Corners: Welded and ground smooth.

3. Hangers: Produce rigid, tamper- and theft-resistant installation, using method indicated below.

    a. Wall bracket of galvanized steel, equipped with concealed locking devices requiring a special tool to remove.
    b. Size: 24"W x 36"H.
    c. Mounting: Mount mirror with bottom at 40" above floor.

G. Coat Hook **TA-06**:

1. Basis-of-Design Product: Bobrick b-76717
2. Mounting: Flanges with concealed fasteners.
3. Material: Stainless steel.

    a. Finish: Smooth, satin finish.
4. Mounting height: Provide in pair, mount one at 46" and one at 50".

H. Grab Bar **TA-07**:

1. Basis-of-Design Product: Bobrick B-6806 36"
2. Mounting: Flanges with concealed fasteners.
3. Material: Stainless steel, 0.05 inch thick.

    a. Finish: Smooth, No. 4, satin finish on ends and slip-resistant texture in grip area.

4. Outside Diameter: 1-1/2 inches.
5. Configuration and Length: Wall mount straight bar 36" long.
6. Mounting height: mount bar 34" from top to floor.

I. Grab Bar **TA-08**:

1. Basis-of-Design Product: Bobrick b-6806 42"
2. Mounting: Flanges with concealed fasteners.
3. Material: Stainless steel, 0.05 inch thick.

    a. Finish: Smooth, No. 4, satin finish on ends and slip-resistant texture in grip area.

4. Outside Diameter: 1-1/2 inches.

5. Configuration and Length: Wall mount straight grab bar 42" long.
6. Mounting height: mount bar 34" from top to floor.

J. Grab Bar **TA-09**:

1. Basis-of-Design Product: Bobrick b-6806 48"
2. Mounting: Flanges with concealed fasteners.
3. Material: Stainless steel, 0.05 inch thick.

    a. Finish: Smooth, No. 4, satin finish on ends and slip-resistant texture in grip area.

4. Outside Diameter: 1-1/2 inches.
5. Configuration and Length: Wall mount straight bar 48" long.
6. Mounting height: mount bar 34" from top to floor.

K. Grab Bar **TA-10**:

1. Basis-of-Design Product: Bobrick b-6806 series
2. Mounting: Flanges with concealed fasteners.
3. Material: Stainless steel, 0.05 inch thick.

    a. Finish: Smooth, No. 4, satin finish on ends and slip-resistant texture in grip area.

4. Outside Diameter: 1-1/2 inches.

5. Configuration and Length: Wall mount on one end with floor mount on other end. Bar shall be 36" from wall to end of bar. Top of bar shall be 34" above finished floor. Floor mount end shall be anchored into floor slab with no exposed flanges.

L. Grab Bar **TA-11**:

1. Basis-of-Design Product: Bobrick b-6806 series
2. Mounting: Flanges with concealed fasteners.
3. Material: Stainless steel, 0.05 inch thick.

    a. Finish: Smooth, No. 4, satin finish on ends and slip-resistant texture in grip area.

4. Outside Diameter: 1-1/2 inches.
5. Configuration and Length: Wall mount on one end with floor mount on other end. Bar shall be 4'-10 1/2" from wall to end of bar. Top of bar shall be 34" above finished floor. Floor mount end shall be anchored into floor slab with no exposed flanges. Provide intermediate support post as required to meet barrier free design loads.

M. Grab Bar **TA-12**:

1. Basis-of-Design Product: Bobrick b-6806 series
2. Mounting: Flanges with concealed fasteners.
3. Material: Stainless steel, 0.05 inch thick.

    a. Finish: Smooth, No. 4, satin finish on ends and slip-resistant texture in grip area.

4. Outside Diameter: 1-1/2 inches.
5. Configuration and Length: Floor mount grab bar. Bar shall be 24" end to end of bar. Top of bar shall be 34" above finished floor. Floor mounted ends shall be anchored into floor slab with no exposed flanges.

N. Grab Bar **TA-13**:

1. Basis-of-Design Product: Bobrick b-6806 24"
2. Mounting: Flanges with concealed fasteners.
3. Material: Stainless steel, 0.05 inch thick.

    a. Finish: Smooth, No. 4, satin finish on ends and slip-resistant texture in grip area.

4. Outside Diameter: 1-1/2 inches.
5. Configuration and Length: Wall mounted straight bar 24" long.
6. Mounting height: mount bar 34" from top to floor.

2.3 FABRICATION

A. General: Fabricate units with tight seams and joints, and exposed edges rolled. Hang doors and access panels with full-length, continuous hinges. Equip units for concealed anchorage and with corrosion-resistant backing plates.

B. Keys: Provide universal keys for internal access to accessories for servicing and resupplying. Provide minimum of six keys to Owner's representative.

PART 3 - EXECUTION

3.1 INSTALLATION

A. Install accessories according to manufacturers' written instructions, using fasteners appropriate to substrate indicated and recommended by unit manufacturer. Install units level, plumb, and firmly anchored in locations and at heights indicated.

B. Grab Bars: Install to withstand a downward load of at least 250 lbf, when tested according to method in ASTM F 446.

3.2 ADJUSTING AND CLEANING

A. Adjust accessories for unencumbered, smooth operation. Replace damaged or defective items.

B. Remove temporary labels and protective coatings.

C. Clean and polish exposed surfaces according to manufacturer's written recommendations.

END OF SECTION 10801

SECTION 11132
PROJECTION SCREENS

PART 1 - GENERAL

1.1 RELATED DOCUMENTS

A. Drawings and general provisions of the Contract, including General and Supplementary Conditions and Division 1 Specification Sections, apply to this Section.

1.2 SUMMARY

A. This Section includes the following:

1. Front-projection screens.

B. Related Sections include the following:

1. Division 6 Section "Miscellaneous Carpentry" for wood backing for recessed screen installation.
2. Division 16 Sections for electrical service and connections including metal device boxes for switches and conduit, where required, for control wiring.

1.3 DEFINITIONS

A. Gain of Front-Projection Screens: Ratio of light reflected from screen material to that reflected perpendicularly from a magnesium carbonate surface as determined per SMPTE RP 94.

1.4 SUBMITTALS

A. Product Data: For each type of screen indicated.

B. Shop Drawings: Show layouts and types of projection screens. Include the following:

1. Location of wiring connections.
2. Location of seams in viewing surfaces.
3. Drop length.
4. Anchorage details.
5. Wiring Diagrams: For electrically operated units.

C. Samples for Initial Selection: For finishes of surface-mounted screen cases.

D. Maintenance Data: For projection screens to include in maintenance manuals.

1.5 QUALITY ASSURANCE

A. Source Limitations: Obtain each type of projection screen through one source from a single manufacturer. Obtain each screen as a complete unit, including necessary mounting hardware and accessories.

B. Electrical Components, Devices, and Accessories: Listed and labeled as defined in NFPA 70, Article 100, by a testing agency acceptable to authorities having jurisdiction, and marked for intended use.

1.6 DELIVERY, STORAGE, AND HANDLING

A. Do not deliver projection screens until building is enclosed and other construction within spaces where screens will be installed is substantially complete and ready for screen installation.

1.7 COORDINATION

A. Coordinate layout and installation of projection screens with adjacent construction, including ceiling framing, light fixtures, HVAC equipment and partitions.

PART 2 - PRODUCTS

2.1 MANUFACTURERS

A. In other Part 2 articles where titles below introduce lists, the following requirements apply to product selection:

1. Available Products: Subject to compliance with requirements, products that may be incorporated into the Work include, but are not limited to, products specified.

2.2 FRONT-PROJECTION SCREENS

A. Manually Operated Screens, General: Manufacturer's standard spring-roller-operated units, consisting of case, screen, mounting accessories, and other components necessary for a complete installation.

1. Screen Mounting: Top edge securely anchored to a 3-inch- diameter, rigid steel roller; bottom edge formed into a pocket holding a tubular metal slat, with ends of slat protected by plastic caps, and with a saddle and pull attached to slat by screws.

B. Surface-Mounted, Metal Encased, Manually Operated Screens: Units designed and fabricated for surface mounting on wall or ceiling, fabricated from formed steel sheet not less than 0.027 inch thick or aluminum extrusions; with flat back design and vinyl covering or baked-enamel finish. Provide end caps and universal mounting brackets, finished to match end caps.

1. Available Products:

    a. Da-Lite Screen Co., Inc.; Model C.
    b. Draper Inc.; Luma 2.

C. Screen Material and Viewing Surface:

1. Matte-White Viewing Surface: Peak gain of 0.9 to 1.0, and gain of not less than 0.8 at an angle of 50 degrees from the axis of the screen surface.

    a. Available Products:

        1) Da-Lite Screen Co., Inc.; Matte White.
        2) Draper Inc. Fiberglass Matte White.

2. Material: Vinyl-coated glass-fiber fabric.
3. Mildew Resistance: Rating of 0 or 1 when tested according to ASTM G 21.
4. Flame Resistance: Passes NFPA 701.
5. Edge Treatment: Black masking borders.

6. Size of Viewing Surface:

    a. PSM-1: 60"H x 80"W manual.

PART 3 - EXECUTION

3.1 INSTALLATION

A. General: Install projection screens at locations indicated to comply with screen manufacturer's written instructions.

B. Install front-projection screens with screen cases in position and in relation to adjoining construction indicated. Securely anchor to supporting substrate in a manner that produces a smoothly operating screen with vertical edges plumb and viewing surface flat when screen is lowered.

1. Test manually operated units to verify that screen operating components are in optimum functioning condition.

3.2 PROTECTING AND CLEANING

A. After installation, protect projection screens from damage during construction. If damage occurs despite such protection, remove and replace damaged components or entire unit as required to provide units in their original, undamaged condition.

END OF SECTION 11132

Kingscott Associates, Inc.
Architects/Engineers
Kalamazoo, Michigan

SECTION 11400
FOODSERVICE EQUIPMENT
SMITH MIDDLE SCHOOL

ITEM SPECIFICATIONS

ITEM 1
Hood & Ventilation System

QUANTITY: One (1) System

MANUFACTURER: Duo-Aire (James Lipski Associates (616) 235-3050)

FEATURES:

1) All exterior surfaces of exhaust canopy shall be constructed of 18 gauge 304 stainless steel.

2) Interior of hood shall be constructed of 18 gauge 304 stainless steel.

3) Construction of hood shall be in accordance with NFPA 96 requirements.

4) Hood to be provided with UL listed fluorescent lights, pre-wired to J-box by manufacturer, quantity as listed on detail drawing. T-12 lamps to be supplied and installed by F.E.C.

5) Hood shall be shaped as shown on plan. Multiple section hoods must be provided with an open capture area.

6) Foodservice Equipment Contractor shall coordinate installation of proper structural, architectural and mechanical details of this item with their own work.

7) It is the intent of this specification that the Foodservice Equipment Contractor will supply and physically install a complete ventilation system; properly installed, fully operational, and in compliance with all State, Local and City Building, Fire and Health codes. Mechanical Contractor to provide and install all parts & piping required for gas connection.

8) System will be provided with, but not limited to, the following: ventilator hood(s), duct collars, fans and starters, curbs, MUA furnace, duct, duct insulation, and disconnects.

9) All seams and joints are to heli-arc welded, ground and polished to blend with the base metal. Weld metals are to be of same composition as base metal.

10) Caulk hood to wall(s) to seal all gaps.

11) Hood to be provided with structural hanging brackets; factory welded.

12) Foodservice Equipment Contractor is to provide all necessary threaded rods, brackets and all hardware required to hang hood where shown on plan.

13) All ventilation controls shall be located in face of hood.

14) Location of J-boxes for control wiring and lighting shall be closely coordinated with other contractors so that all J-boxes are accessible after project construction is complete.

15) Provide with *stainless steel* baffle-type grease extractors, UL listed and easily removable for cleaning without the use of tools.

16) Two (2) weeks prior to foodservice inspection by The BAKER Group, Foodservice Equipment Contractor shall provide a complete certified statement of balance. Statement shall indicate static pressure across hood, State Certification of entire hood system as-built, CFM exhausted and supply CFM. Foodservice Equipment Contractor shall send additional copies of this report to the BAKER Group, Inc., State and Local Health Departments, Fire Marshal and Architect.

17) Hood shall be bottom and front-discharge type with built-in exhaust and supply air collars.

18) Foodservice Equipment Contractor will carefully inspect the architectural and mechanical drawings, and make visits to the site as the project proceeds to make certain that the hood and ductwork design is coordinated so as not to impede the progress of the project, that ducts and all planned collar and make-up air unit connections can be made within the planned spaces and mechanical chases provided for the system.

19) Ductwork is provided as a part of this item. Ductwork will be constructed and installed per NFPA 96, and shall be provided with clean-outs as required by all applicable codes. Foodservice Equipment Contractor will closely coordinate the location of the cleanouts and damper access panels with other trades and the Architect so that ceiling and wall access panels can be planned.

20) Ductwork: Exhaust duct shall be 400 series 18 gauge stainless steel with fully welded seams, and shall be liquid-tight. Supply duct shall be 18 gauge aluminized steel with stitch welded seams. All duct shall be approved for this use by applicable agencies.

21) Painting of exposed rooftop ventilation system equipment including exhaust fan, curbs and equipment rails shall be by Foodservice Equipment Contractor. Paint shall be epoxy based and shall be applied over a primer approved for use with such paint in accordance with the manufacturers instructions.

22) Paint shall be equal to or better than *Sherwin-Williams System 4000 Tile-Clad II (registered TM)* catalyzed epoxy coating. Color is to be Slate Gray, unless otherwise specified by the Architect.

23) All exterior ductwork to be insulated and weatherproofed. Furthermore, all exterior duct runs and shrouds shall have breaks on exposed sides and top.

24) Ventilator fan to be manufactured by Penn (Philadelphia-PA) or equal and shall have a sone rating medium or less.

25) Fan to be sized so that the entire ventilation system can be balanced and operated in accordance with all applicable codes. Provide grease collection devices installed on all exhaust fans.

26) Curb(s) and equipment rails shall be prefabricated and sized for fan and proper ductwork. Pitch curbs and equipment rails to match roof deck. Provide internal vibration isolation and caps on equipment rails.

27) Make-up air unit to be provided with gas fired furnace.

28) Make-up air unit(s) to be designed so that the incoming air grill is 10'-0" away from any roof vent or exhaust. System price shall include all necessary duct extensions and painted metal supports required for rooftop heater, duct and intake. The F.E.C. shall supply base supports for all of the rooftop ventilation equipment. These supports shall be constructed of aluminized steel and shall be suitable for supporting the ventilation equipment. These supports shall be provided to the roofing contractor for installation and flashing prior to the roof membrane installation. These supports to be painted to match roof top equipment.

29) Foodservice Equipment Contractor shall advise other trades, within two (2) weeks of this contract, of ventilator configuration, including dimensional and weight information so that other trades can coordinate proper structural, architectural and mechanical details of this item with their own work.

30) Provide motorized inlet damper and intake filters in make up air unit.

31) Within three (3) weeks of contract award, Foodservice Equipment Contractor to advise other trades of valve, line and load sizes and loose parts provided as a part of this item.

32) All hood controls shall be mounted on face of hood in stainless steel enclosure, and shall include a switch for hood lights, switches and pilot lights for fans and furnace, dirty filter light, and supply air temperature controller.

33) Within three (3) weeks of contract award, Foodservice Equipment Contractor shall advise other contractors of date of manufacture and delivery of all components of this system. In addition, F.E.C. shall provide the name of the firm installing the system. NOTE: The entire ventilation system must be available for installation on the site no less than 10 weeks prior to facility completion. Failure to meet this requirement will result in a $100 penalty for every calendar day the system is late.

34) Exhaust fan(s) shall be interlocked to make-up air unit(s), and shall be UL listed for grease laden air.

35) Verify all utilities and air volumes.

36) Make certain that ventilation equipment and hood are delivered to site in time to fit through access passages to kitchen and rooftop.

37) Gas fired make-up air units shall be design certified to appropriate ANSI standards.

38) F.E.C. to provide closure panels from top of hood to ceiling as required.

ALTERNATES: None

END OF SECTION

SECTION 11490
GYMNASIUM EQUIPMENT

PART 1 - GENERAL

1.1 RELATED DOCUMENTS

A. Drawings and general provisions of the Contract, including General and Supplementary Conditions and Division 1 Specification Sections, apply to this Section.

1.2 SUMMARY

A. This Section includes the following gymnasium equipment:

1. Divider curtains.

B. Related Sections include the following:

1. Division 16 Sections for electrical service for motor operators, controls, and other powered devices for motorized gymnasium equipment.

1.3 DEFINITIONS

A. NFHS: The National Federation of State High School Associations.

1.4 SUBMITTALS

A. Product Data: For each type of product indicated.

1. If applicable, include assembly, disassembly, and storage instructions for removable equipment.
2. Motors: Show nameplate data, ratings, characteristics, and mounting arrangements.

B. Shop Drawings: For gymnasium equipment. Include plans, elevations, sections, details, attachments to other work, and the following:

1. Method of field assembly for removable equipment, connections, installation details, mountings, floor inserts, attachments to other work, and operational clearances.

C. Samples for Initial Selection: For each type of gymnasium equipment indicated.

1. Divider Curtain Fabric: Not less than 12 inches square of open mesh , and of opaque fabric.

D. Operation and Maintenance Data: For gymnasium equipment to include in emergency, operation, and maintenance manuals.

E. Warranty: Special warranty specified in this Section.

1.5 QUALITY ASSURANCE

A. Installer Qualifications: An employer of workers trained and approved by manufacturer.

B. Source Limitations: Obtain each type of gymnasium equipment through one source from a single manufacturer.

C. Electrical Components, Devices, and Accessories: Listed and labeled as defined in NFPA 70, Article 100, by a testing agency acceptable to authorities having jurisdiction, and marked for intended use.

1.6 PROJECT CONDITIONS

A. Environmental Limitations: Do not install gymnasium equipment until spaces are enclosed and weatherproof, wet work in spaces is complete and dry, and ambient temperature and humidity conditions are maintained at the levels indicated for Project when occupied for its intended use.

B. Field Measurements: Verify position and elevation of floor inserts and layout for gymnasium equipment.

1.7 COORDINATION

A. Coordinate installation of floor inserts with structural floors and finish flooring installation and with court layout and game lines and markers on finish flooring.

B. Coordinate layout and installation of overhead-supported gymnasium equipment and suspension system components with other construction including light fixtures, HVAC equipment, fire-suppression-system components, and partition assemblies.

1.8 WARRANTY

A. Special Warranty: Manufacturer's standard form in which manufacturer agrees to repair or replace components of gymnasium equipment that fail in materials or workmanship within specified warranty period.

1. Warranty Period: 10 years from date of Substantial Completion.

PART 2 - PRODUCTS

2.1 MATERIALS

A. Aluminum: Alloy and temper recommended by manufacturer for type of use and finish indicated.

1. Cast Aluminum: ASTM B 179.
2. Flat Sheet: ASTM B 209.

B. Steel: Comply with the following:

1. Steel Plates, Shapes, and Bars: ASTM A 36/A 36M.
2. Steel Tubing: ASTM A 500 or ASTM A 513, cold formed.

C. Support Cable: 1/4-inch- diameter, 7x19 galvanized steel aircraft cable with a breaking strength of 7000 lb. Provide fittings complying with cable manufacturer's written instructions for size, number, and method of installation.

D. Castings and Hangers: Malleable iron, ASTM A 47/A 47M, grade required for structural loading.

E. Softwood Plywood: DOC PS 1, exterior.

F. Equipment Wall-Mounting Board: Wood, neutral-color painted finish, size, and quantity as required to mount gymnasium equipment according to manufacturer's written instructions.

G. Anchors, Fasteners, Fittings and Hardware: Manufacturer's standard corrosion-resistant or noncorrodible units; concealed; tamperproof, vandal- and theft-resistant design.

H. Grout: Nonshrink, nonmetallic, premixed, factory-packaged, nonstaining, noncorrosive, nongaseous grout complying with ASTM C 1107 with minimum strength recommended in writing by gymnasium equipment manufacturer.

2.2 DIVIDER CURTAINS

A. Manufacturers: Subject to compliance with requirements, provide products by one of the following:

1. AALCO Manufacturing.
2. American Athletic, Inc.
3. Basketball Products International; a division of American Athletic, Inc.
4. Draper Inc.
5. Jaypro Sports, LLC.
6. Performance Sports Systems.
7. P. W. Athletic Mfg. Co.

B. Divider Curtains: Electrically operated, fold up, and as follows:

1. Upper Curtain, Mesh: Woven fabric of 100 percent polyester yarn coated with PVC weighing not less than 6.5 oz./sq. yd.

   a. Mesh Color: White.

2. Lower Curtain, Solid: Woven polyester coated with PVC, 18 oz./sq. yd, embossed, 10-foot height above floor.

   a. Fabric Color(s): As selected by Architect from manufacturer's full range for one color(s).

3. Divider Curtain Flame-Resistance Ratings: Passes NFPA 701, inherently and permanently flame resistant.

    a. Permanently attach label to each fabric of curtain assembly indicating whether fabric is inherently and permanently flame resistant or treated with flame-retardant chemicals, and whether it will require retreatment after designated time period or cleaning.

C. Curtain Fabrication: Fused seams and the following:

1. Top Hem: Reinforce with double thickness mesh for continuous pipe batten.
2. Bottom Hem for Fold-up Curtains: Floor-length curtains with hems 2 inches above finished floor and with manufacturer's standard pipe batten with felt padding in pocket.

D. Accessories:

1. Curtain Battens: Fabricate battens from steel pipe with a minimum number of joints. As necessary for required lengths, connect pipe with drive-fit pipe sleeve not less than 18 inches long, and secure with 4 flush rivets, plug welds, threaded couplings, or another equally secure method. Shop-paint completed pipe battens with black paint.

    a. Steel Pipe: ASTM A 53/ A 53M, Grade A, standard weight (Schedule 40), black, 1-1/2-inch nominal diameter, unless otherwise indicated.

E. Divider Curtain Electric Operator: Provide operating machine of size and capacity recommended by manufacturer for equipment specified, with electric motor and factory-prewired motor controls, starter, gear-reduction unit, and remote controls. Coordinate wiring requirements and electrical characteristics with building electrical system.

1. Operator Type: Electric motor, enclosed gear-head-reduction drive, with chain and sprocket secondary drive.
2. Motor Characteristics: Sufficient to start, accelerate, reverse, and operate connected loads at designated speeds within installed environment and with indicated operating sequence, and without exceeding nameplate rating or considering service factor. Comply with NEMA MG 1, and the following:
3. Voltage: 120 V.
4. Horsepower: 3/4 hp.
5. Enclosure: Manufacturer's standard.
6. Duty: Continuous duty at ambient temperature of 105 deg F and at altitude of 3300 feet above sea level.
7. Service Factor: 1.15 for open dripproof motors; 1.0 for totally enclosed motors.
8. Phase: One.
9. Remote-Control Station(s): NEMA ICS 6, Type 1 enclosure for recessed or flush mounting, momentary-contact, three-position switch-operated control.

    a. Keys: Provide two key(s) per station.

10. Radio Controls: Digital system consisting of code-compatible universal coaxial receiver, one per curtain, and two portable multiple-channel transmitters for operating curtain with up and down functions.

PART 3 - EXECUTION

3.1 EXAMINATION

A. Examine substrates, areas, and conditions, with Installer present, for compliance with requirements for play court layout, alignment of mounting substrates, installation tolerances, operational clearances, accurate locations of connections to building electrical system, and other conditions affecting performance.

1. Verify critical dimensions.
2. Examine supporting structure andsubfloors and footings below finished floor.
3. Examine wall assemblies, where reinforced to receive anchors and fasteners, to verify that locations of concealed reinforcements have been clearly marked. Locate reinforcements and mark locations.
4. Proceed with installation only after unsatisfactory conditions have been corrected.

3.2 INSTALLATION, GENERAL

A. General: Comply with manufacturer's written installation instructions and competition rules indicated for each type of gymnasium equipment. Complete equipment field assembly, where required.

B. Unless otherwise indicated, install gymnasium equipment after other finishing operations, including painting, have been completed.

C. Permanently Placed Gymnasium Equipment and Components: Rigid, level, plumb, square, and true; anchored securely to supporting structure; positioned at locations and elevations indicated on Shop Drawings; in proper relation to adjacent construction; and aligned with court layout.

1. Operating Gymnasium Equipment: Verify clearances for movable components of gymnasium equipment throughout entire range of operation and for access to operating components.

D. Anchoring to In-Place Construction: Use anchors and fasteners where necessary for securing built-in and permanently placed gymnasium equipment to structural support and for properly transferring load to in-place construction.

E. Connections: Connect automatic operators to building electrical system.

3.3 ADJUSTING

A. Adjust movable components of gymnasium equipment to operate safely, smoothly, easily, and quietly, free from binding, warp, distortion, nonalignment, misplacement, disruption, or malfunction, throughout entire operational range. Lubricate hardware and moving parts.

3.4 CLEANING

A. After completing gymnasium equipment installation, inspect components. Remove spots, dirt, and debris and touch up damaged shop-applied finishes according to manufacturer's written instructions.

B. Replace gymnasium equipment and finishes that cannot be cleaned and repaired, in a manner approved by Architect, before time of Substantial Completion.

3.5 DEMONSTRATION

A. Engage a factory-authorized service representative to train Owner's maintenance personnel to adjust, operate, and maintain gymnasium equipment. Refer to Division 1 Section "Demonstration and Training."

END OF SECTION 11490

SECTION 12355
INSTITUTIONAL CASEWORK

PART 1 - GENERAL

1.1 RELATED DOCUMENTS

A. Drawings and general provisions of the Contract, including General and Supplementary Conditions and Division 1 Specification Sections, apply to this Section.

1.2 SUMMARY

A. Section Includes:

1. Plastic-laminate-faced wood cabinets of stock design.
2. Plastic-laminate countertops.
3. Wall shelving.
4. Wood-faced cabinets of stock design.

B. Related Sections:

1. Division 6 Section "Interior Architectural Woodwork."
2. Division 9 Section "Resilient Wall Base and Accessories" for resilient base applied to manufactured wood casework.

1.3 DEFINITIONS

A. MDF: Medium-density fiberboard.

B. Exposed Portions of Cabinets: Surfaces visible when doors and drawers are closed, including bottoms of cabinets more than 48 inches above floor, and surfaces visible in open cabinets.

C. Semiexposed Portions of Cabinets: Surfaces behind opaque doors, such as interiors of cabinets, shelves, dividers, interiors and sides of drawers, and interior faces of doors. Tops of cases 78 inches or more above floor are defined as semiexposed.

D. Concealed Portions of Cabinets: Surfaces not usually visible after installation, including sleepers, web frames, dust panels, and ends and backs that are placed directly against walls or other cabinets.

E. Hardwood Plywood: A panel product composed of layers or plies of veneer, or of veneers in combination with lumber core, hardboard core, MDF core, or particleboard core, joined with adhesive, and faced both front and back with hardwood veneers.

1.4 SUBMITTALS

A. Product Data: For each type of product indicated.

B. Shop Drawings: Include plans, elevations, sections, details, and attachments to other work. Show fabrication details, including types and locations of hardware. Show installation details, including field joints and filler panels. Indicate manufacturer's catalog numbers for casework.

C. Qualification Data: For qualified Installer.

1.5 QUALITY ASSURANCE

A. Manufacturer Qualifications: A qualified manufacturer that is certified for chain of custody by an FSC-accredited certification body.

B. Installer Qualifications: Manufacturer's authorized representative who is trained and approved for installation of units required for this Project.

C. Source Limitations: Obtain manufactured wood casework from single source from single manufacturer.

D. Quality Standard: Unless otherwise indicated, comply with requirements for modular cabinets in AWI's "Architectural Woodwork Quality Standards."

E. Product Designations: Drawings indicate sizes, configurations, and finish material of manufactured wood casework by referencing designated manufacturer's catalog numbers. Other manufacturers' casework of similar sizes and door and drawer configurations, of same finish material, and complying with the Specifications may be considered. Refer to Division 1 Section "Product Requirements."

1.6 DELIVERY, STORAGE, AND HANDLING

A. Deliver manufactured wood casework only after painting, utility roughing-in, and similar operations that could damage, soil, or deteriorate casework have been completed in installation areas. If casework must be stored in other than installation areas, store only in areas where environmental conditions meet requirements specified in "Project Conditions" Article.

B. Keep finished surfaces covered with polyethylene film or other protective covering during handling and installation.

1.7 PROJECT CONDITIONS

A. Environmental Limitations: Do not deliver or install manufactured wood casework until spaces are enclosed and weathertight, wet work in spaces is complete and dry, work above ceilings is

complete, and temporary HVAC system is operating and maintaining ambient temperature and humidity conditions at occupancy levels during the remainder of the construction period.

B. Environmental Limitations: Do not deliver or install manufactured wood casework until building is enclosed, wet work is complete, and HVAC system is operating and maintaining temperature between 60 and 90 deg F and relative humidity at occupancy levels during the remainder of the construction period.

C. Field Measurements: Verify actual dimensions of construction contiguous with manufactured wood casework by field measurements before fabrication.

1.8 COORDINATION

A. Coordinate layout and installation of framing and reinforcements in walls and partitions for support of manufactured wood casework.

1.9 WARRANTY

A. Special Warranty: Manufacturer's standard form in which manufacturer agrees to repair or replace components of manufactured wood casework that fail in materials or workmanship within specified warranty period.

1. Failures include, but are not limited to, the following:

a. Delamination of components or other failures of glue bond.
b. Warping of components.
c. Failure of operating hardware.
d. Deterioration of finishes.

2. Warranty Period: Ten years from date of Substantial Completion.

1.10 EXTRA MATERIALS

A. Furnish complete touchup kit for each type and finish of manufactured wood casework provided. Include scratch fillers, stains, finishes, and other materials necessary to perform permanent repairs to damaged casework finish.

PART 2 - PRODUCTS

2.1 MANUFACTURERS

A. Basis-of-Design Product: Subject to compliance with requirements, provide product indicated on Drawings or comparable product by one of the following:

1. Plastic-Laminate-Faced Manufactured Casework:

a. Case Systems Inc.

b. Stevens Industries, Inc.
c. TMI Systems Design Corporation.
d. Strata.

2. Wood-Faced Manufactured Casework:

a. Campbell Rhea.
b. TMI.
c. Architect's pre-approved equal.

2.2 MATERIALS, GENERAL

A. Low-Emitting Materials: Provide manufactured wood casework, including countertops, made with adhesives and composite wood products containing no urea formaldehyde.

B. Maximum Moisture Content for Lumber: 7 percent for hardwood and 12 percent for softwood.

C. Hardwood Plywood: HPVA HP-1, either veneer core or particleboard core unless otherwise indicated.

D. Softwood Plywood: DOC PS 1.

E. Particleboard: ANSI A208.1, Grade M-2.

F. Hardboard: AHA A135.4, Class 1 Tempered.

G. Plastic Laminate: High-pressure decorative laminate complying with NEMA LD 3.

1. Manufacturers: Subject to compliance with requirements, provide products by one of the following:

a. Formica Corporation.
b. Nevamar Company, LLC; Decorative Products Div.
c. Wilsonart International; Div. of Premark International, Inc.

H. Edgebanding for Plastic Laminate: Rigid PVC extrusions, through color with satin finish, 3 mm thick at doors and drawer fronts, 1 mm thick elsewhere.

I. Edgebanding for Wood-Veneered Construction: Minimum 1/8 inch thick, solid wood of same species as face veneer.

1. Select wood edgebanding for grain and color compatible with face veneers.

2.3 CABINET MATERIALS

A. Exposed Cabinet Materials:

1. Wood Species: Red oak.
2. Plywood: Hardwood plywood with face veneer of species indicated, selected for compatible color and grain. Grade A exposed faces at least 1/50 inch thick, and Grade J crossbands. Provide backs of same species as faces.

    1. Face Veneer Cut: To match existing.

3. Plastic Laminate: Grade VGS.
4. Unless otherwise indicated, provide specified edgebanding on all exposed edges.

B. Semiexposed Cabinet Materials:

1. Plastic Laminate: Grade VGS.

    a. Provide plastic laminate for semiexposed surfaces unless otherwise indicated.
    b. Provide plastic laminate for interior faces of doors and drawer fronts and where indicated.

C. Concealed Cabinet Materials:

1. Plastic Laminate: Grade BKL.

2.4 DESIGN, COLOR, AND FINISH

A. Design: Provide manufactured wood casework of the following design:

1. Flush overlay with wire pulls.
2. For wood casework, match existing style.

B. Plastic-Laminate Colors, Patterns, and Finishes: As indicated in Schedule.

C. PVC Edgebanding Color: As indicated in Schedule.

2.5 CABINET FABRICATION

A. Plastic-Laminate-Faced Cabinet Construction:

1. Bottoms and Ends of Cabinets, and Tops of Wall Cabinets and Tall Cabinets: 3/4-inch particleboard, plastic-laminate faced on exposed surfaces, melamine faced on semiexposed surfaces.
2. Shelves: 3/4-inch particleboard, plastic-laminate faced on exposed surfaces, melamine faced.
3. Backs of Cabinets: 1/2-inch particleboard, plastic-laminate faced on exposed surfaces, melamine faced on semiexposed surfaces.
4. Drawer Fronts: 3/4-inch particleboard, plastic-laminate faced.
5. Drawer Sides and Backs: 1/2-inch melamine faced particleboard, with glued dovetail or multiple-dowel joints.

6. Drawer Bottoms: 1/4-inch melamine faced particleboard glued and dadoed into front, back, and sides of drawers. Use 1/2-inch material for drawers more than 24 inches wide.
7. Doors: 3/4-inch particleboard or MDF, plastic-laminate faced.

B. Filler Strips: Provide as needed to close spaces between cabinets and walls, ceilings, and indicated equipment. Fabricate from same material and with same finish as cabinets.

2.6 FINISH FOR WOOD FACED MANUFACTURED CASEWORK

A. Preparation: Sand lumber and plywood for manufactured wood casework construction before assembling. Sand edges of doors and drawer fronts and molded shapes with profile-edge sander. Sand casework after assembling for uniform smoothness at least equivalent to that produced by 220 grit sanding and without machine marks, cross sanding, or other surface blemishes.

B. Staining: Remove fibers and dust and apply wash-coat sealer and stain to exposed and semiexposed surfaces as required to provide uniform color and to match approved samples.

C. Finishing Closed-Grain Woods: Apply manufacturer's standard two-coat, baked, clear finish consisting of a thermosetting catalyzed sealer and a thermosetting catalyzed conversion varnish. Sand and wipe clean between applications of sealer and topcoat. Topcoat may be omitted on concealed surfaces.

D. Finishing Open-Grain Woods: Apply manufacturer's standard three-coat, baked, clear finish consisting of a thermosetting catalyzed sealer and two coats of a thermosetting catalyzed conversion varnish. Sand and wipe clean between applications of sealer and topcoat and between topcoats. Topcoats may be omitted on concealed surfaces.

2.7 CASEWORK HARDWARE AND ACCESSORIES

A. Hardware, General: Unless otherwise indicated, provide manufacturer's standard satin-finish, commercial-quality, heavy-duty hardware.

1. Use threaded metal or plastic inserts with machine screws for fastening to particleboard except where hardware is through-bolted from back side.

B. Butt Hinges: Powder-coated, semiconcealed, 5-knuckle hinges complying with BHMA A156.9, Grade 1, with antifriction bearings and rounded tips. Provide 2 hinges for doors less than 48 inches high and 3 hinges for doors more than 48 inches high.

C. Pulls: Solid aluminum wire pulls, fastened from back with two screws. Provide 2 pulls for drawers more than 24 inches wide. Provide satin finish.

D. Pulls: Semirecessed plastic pulls. For sliding doors, provide recessed plastic flush-pulls. Provide 2 pulls for drawers more than 24 inches wide.

E. Door Catches: Powder-coated, nylon-roller spring catch or dual, self-aligning, permanent magnet catch. Provide 2 catches on doors more than 48 inches high.

F. Drawer Slides: BHMA A156.9, Type B05091.

1. Heavy Duty (Grade 1HD-100 and Grade 1HD-200): Side mounted; full-extension type; zinc-plated, steel ball-bearing slides.
2. Box Drawer Slides: 150 lbf.
3. File Drawer Slides: 200 lbf.

G. Drawer and Hinged Door Locks: Cylindrical (cam) type, 5-pin tumbler, brass with chrome-plated finish, and complying with BHMA A156.11, Grade 1.

1. Provide a minimum of two keys per lock and six master keys.
2. Provide locks on all doors and drawers.

H. Adjustable Shelf Supports: 2-pin locking plastic shelf rests complying with BHMA A156.9, Type B04013.

I. Grommets for Cable Passage through Countertops: 1-1/2-inch OD, black, molded-plastic grommets and matching plastic caps with slot for wire passage.

J. At Smith Middle School Home Skills Room all existing hardware and accessories are to be checked. Damaged or faulty hardware, including, but not limited to drawer slides, door hinges, and pulls are to be replaced. Verify in field.

2.8 COUNTERTOPS

A. Countertops, General: Provide smooth, clean exposed tops and edges in uniform plane free of defects. Provide front and end overhang of 1 inch over base cabinets.

B. Plastic-Laminate Tops: Plastic-laminate sheet, shop bonded to both sides of 1-1/8-inch plywood or particleboard. Sand surfaces to which plastic laminate is to be bonded.

1. Plastic Laminate for Flat Tops: Grade HGS.
2. Plastic Laminate for Backing: Grade BKL.
3. Provide 3-mm PVC edging on front edge of top, on top edges of backsplashes and end splashes, and on ends of tops and splashes.
4. Construct top and backsplash from one piece of plastic laminate with rolled edges and coved intersection. Where indicated, provide separate end splashes fitted to top.
5. Use exterior plywood or exterior glue particleboard for countertops containing sinks.

2.9 WALL SHELVING

A. Plastic-Laminate Shelving: Plastic-laminate sheet, Grade HGL or HGP, shop bonded to both sides of particleboard. Sand surfaces to which plastic laminate is to be bonded.

1. Shelf Thickness: 1 inch.
2. Edge Treatment: Finish both edges with rigid PVC extrusion, through color with satin finish, 3 mm thick.

B. Adjustable Shelf Supports: Zinc-plated steel standards and shelf brackets, complying with BHMA A156.9, Types B04102 and B04112, surface mounted.

PART 3 - EXECUTION

3.1 EXAMINATION

A. Examine areas, with Installer present, for compliance with requirements for installation tolerances, location of framing and reinforcements, and other conditions affecting performance of manufactured wood casework.

B. Proceed with installation only after unsatisfactory conditions have been corrected.

3.2 CASEWORK INSTALLATION

A. Install level, plumb, and true; shim as required, using concealed shims. Where manufactured wood casework abuts other finished work, apply filler strips and scribe for accurate fit, with fasteners concealed where practical.

B. Base Cabinets: Set cabinets straight, level, and plumb. Adjust subtops within 1/16 inch of a single plane. Fasten cabinets to masonry or framing, wood blocking, or reinforcements in walls and partitions with fasteners spaced 24 inches o.c. Bolt adjacent cabinets together with joints flush, tight, and uniform. Align similar adjoining doors and drawers to a tolerance of 1/16 inch.

1. Where base cabinets are not installed adjacent to walls, fasten to floor at toe space with fasteners spaced 16 inches o.c. Secure sides of cabinets to floor, where they do not adjoin other cabinets, with not less than two fasteners.

C. Wall Cabinets: Hang cabinets straight, level, and plumb. Adjust fronts and bottoms within 1/16 inch of a single plane. Fasten to hanging strips, masonry, or framing, blocking, or reinforcements in walls or partitions. Align similar adjoining doors to a tolerance of 1/16 inch.

1. Fasten through back, near top and bottom, at ends, and not more than 16 inches o.c.
2. Use expansion anchors at solid masonry.
3. Use No. 10 wafer-head screws sized for 1-inch penetration at wood hanging strips.
4. Use No. 10 wafer-head screws sized for 1-inch penetration into wood framing or blocking at wood-framed partitions.

D. Install hardware uniformly and precisely. Set hinges snug and flat in mortises unless otherwise indicated. Adjust and align hardware so moving parts operate freely and contact points meet accurately. Allow for final adjustment after installation.

E. Adjust casework and hardware so doors and drawers operate smoothly without warp or bind. Lubricate operating hardware as recommended by manufacturer.

3.3 INSTALLATION OF TOPS

A. Field Jointing: Where possible make in the same manner as shop jointing, using dowels, splines, adhesives, and fasteners recommended by manufacturer. Prepare edges to be joined in shop so Project-site processing of top and edge surfaces is not required. Locate field joints where shown on Shop Drawings.

1. Secure field joints in plastic-laminate countertops with concealed clamping devices located within 6 inches of front and back edges and at intervals not exceeding 24 inches. Tighten according to manufacturer's written instructions to exert a constant, heavy-clamping pressure at joints.

B. Secure tops to cabinets with Z- or L-type fasteners or equivalent, using two or more fasteners at each front, end, and back.

C. Abut top and edge surfaces in one true plane, with internal supports placed to prevent deflection.

D. Secure backsplashes and end splashes to tops with concealed metal brackets at 16 inches o.c. and walls with adhesive.

E. Seal junctures of tops, splashes, and walls with mildew-resistant silicone sealant or another permanently elastic sealing compound recommended by countertop material manufacturer.

3.4 INSTALLATION OF SHELVING

A. Securely fasten shelf standards to masonry, partition framing, wood blocking, or reinforcements in partitions.

1. Fasten shelf standards at ends and not more than 12 inches o.c.
2. Use toggle bolts at hollow masonry.
3. Use expansion anchors at solid masonry.
4. Use toggle bolts in metal framing or metal backing at metal-framed partitions. Do not use wall anchors in gypsum board.

B. Install shelf standards plumb and at heights to align shelf brackets for level shelves. Space standards not more than 30 inches o.c.

C. Install shelving level and straight, closely fitted to other work where indicated.

3.5 CLEANING AND PROTECTING

A. Repair or remove and replace defective work as directed on completion of installation.

B. Clean finished surfaces, touch up as required, and remove or refinish damaged or soiled areas to match original factory finish, as approved by Architect.

C. Protection: Provide 6-mil plastic or other suitable water-resistant covering over countertop surfaces. Tape to underside of countertop at a minimum of 48 inches o.c. Remove protection at Substantial Completion.

3.6 PLASTIC LAMINATE SCHEDULE

A. **Boulan:** Plastic Laminate as selected by Architect from full range of Wilsonart, Pionite, Nevamar and Formica.

B. **Smith**:

Vertical Surfaces: Wilsonart, Desert Zephyr, #4841-60.

Horizontal Surfaces: Wilsonart, Green Legacy, 4657-60

TAG SCHEDULE FOLLOWS

TAG #	LSI STYLE #	TMI STYLE #	CASE STYLE#	STEVENS STYLE #	SIZE WIDTH	SIZE DEPTH	SIZE HEIGHT	DESCRIPTION	Notes
								34" DRAWER - DOOR BASE CABINETS	Locking of cabinets is typical unless noted otherwise (UNO)
B-3	1102	D1123	B315	10432	36"	24"	34"	Drawer, door base cabinet. 2 hinged doors, 2 drawers, 1 adjustable shelf	Locking
B-4	1102	D1122	B513	10432	30"	24"	34"	Drawer, door base cabinet. 2 hinged doors, 1 drawer, 1 adjustable shelf	Locking
B-6	1072	D1120	B311	10426	24"	24"	34"	Drawer, door base cabinet. 1 door hinged left, 1 drawer, 1 adjustable shelf	Locking
B-10	1072	D1120	B311	10426	18"	24"	34"	Drawer, door base cabinet. 1 door hinged left, 1 drawer, 1 adjustable shelf	Locking
								34" DOOR BASE CABINETS	
B-42	1001	B2062	B104	10181	42"	24"	34"	Door base cabinet. 2 hinged doors, 4 adjustable shelves, fixed vertical divider	Locking
B-43	1002	B2052	B010	10129	36"	24"	34"	Door base cabinet. 2 hinged doors, 1 adjustable shelf	Locking
B-45	1002 Mod.	B2052	B010	10129	24"	24"	34"	Door base cabinet. 2 hinged doors, 1 adjustable shelf	Locking
								34" DRAWER BASE CABINETS	

B-61	1240/1250	D4000	B404	10371 Mod.	36"	24"	34"	Drawer base. 4 drawers equal size OR 4" top drawer , 3 bottom drawers equal	Locking
B-64	1240/1250	D4000	B404	10370	18"	24"	34"	Drawer base. 4 drawers equal size OR 4" top drawer , 3 bottom drawers equal	Locking
B-65	1240/1250	D4000	B404	10370 Mod.	15"	24"	34"	Drawer base. 4 drawers equal size OR 4" top drawer , 3 bottom drawers equal	Locking
								ADA COMPLIANT CABINETS	
BF-21					36"	24'	34"	Sink base cabinet. 2 recessing doors. Provide Acuride Pro-Pocket hardware at doors. Cabinet must meet ADA requirememts.	
BF-23					36"	24'	34"	**Wood** Sink base cabinet. 2 recessing doors. Provide Acuride Pro-Pocket hardware at doors. Cabinet must meet ADA requirememts.	Wood cabinet at Smith M.S. Home Skills Room. Refer to specifications and plan.
								24" DOOR WALL CABINETS	
W-3	3052	W2052	W0101	15129	36"	14"	24"	Wall cabinet. 2 hinged doors, 1 adjustable shelf. Clear inside depth of 12".	Locking

W-4	3052	W2052	W010	15129	30"	14"	24"	Wall cabinet. 2 hinged doors, 1 adjustable shelf. Clear inside depth of 12".	Locking
W-6	3072	W2050	W011 Mod.	15121	24"	14"	24"	Wall cabinet. 1 hinged left door, 1 adjustable shelf. Clear inside depth of 12".	Locking
W-10	3072	W2050	W011 Mod.	15121	18"	14"	24"	Wall cabinet. 1 hinged left door, 1 adjustable shelf. Clear inside depth of 12".	Locking
W-12	3072	W2050	W011 Mod.	15121	15"	14"	24"	Wall cabinet. 1 hinged left door, 1 adjustable shelf. Clear inside depth of 12".	Locking
								15" WALL DOOR CABINET	
W-603	3002 Mod.	W2052 Mod.	W010	15129	36"	14"	15"	Wall cabinet. 2 hinged doors. Clear inside depth of 12"	Locking
								84" TALL CABINETS	
T-13	5062	T2102	T010	25129	36"	24"	84"	Tall storage. 2 doors, 1 fixed shelf, 4 adjustable shelves.	Locking
T-25	5062	T2122	T104	25129	36"	**18"**	84"	Tall Closed Storage Cabinet. 2 doors. 1 fixed shelf, 4 adjustable shelves	Locking
								84" WARDROBES	

T-53	5212 MOD.	T2572 MOD.	T230 MOD.	25561 MOD.	24"	**18"**	84"	Wardrobe. 1 door, hinged left, 1 fixed shelf, 1 clothes rod.	Locking
								COUNTER-TOPS	
CT-1					PER PLAN	PER PLAN	PER PLAN	New Plastic Laminate at existing wood casework. Refer to plans for size and location. Refer to specification for material designation.	
								66" MOBILE TALL STORAGE	
T-142	7460 Mod.	Q6402 Mod.	N/A	60180 Mod.	42"	**30"**	66"	Mobile Tall Storage. 8 adjustable shelves. 5" Locking casters. Vertical divider.	Locking
								KNEE SPACES	
KS-1					PER PLAN	**30"**	**28"**	New Knee Space counter top @ Sewing area. Provide grommets @ 36" o.c. spacing. Provide full height finished end and back panels as indicated on drawings. Povide backsplash.	

SECTION 12660
TELESCOPING STANDS

PART 1 - GENERAL

1.1 RELATED DOCUMENTS

A. Drawings and general provisions of the Contract, including General and Supplementary Conditions and Division 1 Specification Sections, apply to this Section.

1.2 SUMMARY

A. This Section includes the following:

1. Wall-attached telescoping stands.

1.3 SUBMITTALS

A. Product Data: Include construction details, material descriptions, dimensions of individual components and profiles, and finishes for telescoping stands.

B. Shop Drawings: Include plans, elevations, sections, details, and attachments to other work.

1. Include structural analysis data signed and sealed by the qualified professional engineer responsible for their preparation.
2. Include wiring diagrams for electrically operated units.

C. Samples for Initial Selection: For each type of exposed finish required.

D. Operation and Maintenance Data: For telescoping stands to include in emergency, operation, and maintenance manuals.

1.4 QUALITY ASSURANCE

A. Installer Qualifications: Manufacturer's authorized representative who is trained and approved for installation of units required for this Project.

B. Manufacturer's Engineering Responsibility: Preparation of data for telescoping stands, including Shop Drawings, and comprehensive engineering analysis by a qualified professional engineer.

C. Safety Standard: Provide telescoping stands that comply with requirements in NFPA 102.

D. Welding: Qualify procedures and personnel according to AWS D1.1 "Structural Welding Code - Steel" and AWS D1.3 "Structural Welding Code - Sheet Steel."

E. Electrical Components, Devices, and Accessories: Listed and labeled as defined in NFPA 70, Article 100, by a testing agency acceptable to authorities having jurisdiction, and marked for intended use.

F. Accessibility Requirements: Provide telescoping stands that comply with requirements in the U.S. Architectural & Transportation Barriers Compliance Board's "Americans with Disabilities Act (ADA), .

G. Preinstallation Conference: Conduct conference at Project site to comply with requirements in Division 1 Section "Project Management and Coordination."

1.5 PROJECT CONDITIONS

A. Field Measurements: Verify actual locations of walls, columns, and other construction that will interface with telescoping stands by field measurements before fabrication and indicate measurements on Shop Drawings.

PART 2 - PRODUCTS

2.1 MANUFACTURERS

A. Manufacturers: Subject to compliance with requirements, provide products by one of the following:

1. Interkal LLC.
2. Pre-approved equal.

2.2 MATERIALS

A. Wood:

1. Plywood: APA grade trademarked, DOC PS 1.

B. Steel:

1. Structural Steel Shapes, Plates, and Bars: ASTM A 36/A 36M.
2. Uncoated Steel Sheet: ASTM A 1008/A 1008M, Designation CS (cold-rolled commercial steel), or ASTM A 1011/A 1011M, Designation CS (hot-rolled commercial steel).
3. Tubing: ASTM A 500, cold formed; ASTM A 501, hot formed; or ASTM A 513, mechanical.

C. Extruded Aluminum: ASTM B 221, alloy as standard for manufacturer.

D. Polyethylene Plastic: High-density polyethylene; molded, color-pigmented, textured, impact-resistant, structural formulation.

2.3 TELESCOPING STANDS

A. Description: Operable systems of multiple-tiered seating on interconnected folding platforms that close, without being dismantled, into a nested stack for storing or moving. Stand units permit opening and closing of adjacent rows, allow individual and collective rows to be locked open for use, and close with vertical faces of upper skirts on the same vertical plane.

B. Wall-Attached Telescoping Stands: Rear of understructure permanently attaches to wall construction.

1. Operation: Automatic, friction-type integral power unit.

a. Limit Switches: Automatically stop integral power system when telescoping stands reach fully opened or closed positions.
b. Motion Monitor: Flashing light with self-contained warning horn, rated at 85 decibels (dB) at 10 feet, mounted under telescoping seating for audio and visual warning during integral power operation.
c. Transformer: As required to coordinate current characteristics of motor and control station with building electrical system.
d. Radio Controls: Digital system consisting of code-compatible universal coaxial receiver, one per bleacher section and two portable multiple-channel transmitters for operating bleacher section individually with open and close functions.

C. Row Spacing: 22".

D. Row Rise: 10.25".

E. Bench Seats and Skirts:

1. Material: Molded polyethylene plastic with contour seat surface.

a. Colors: As selected by Architect from manufacturer's standard.

2. Bench Height: Not less than 16 inches or more than 18 inches.
3. Bench Depth: 12 inches.

F. Wheelchair-Accessible Seating: Locate notchouts to provide wheelchair-accessible seating at locations indicated on Drawings.

1. Equip tiers adjacent to wheelchair-accessible seating with front rails as required by referenced safety standard.
2. Notch-outs must be located at section joints only to avoid interference with understructure.
3. Include all fascia panels and front rails. Fascia panels shall have manufacturers standard poly-deck finish to match deck board surface.

G. Deck: Plywood.

1. Finish: Polyethylene textured overlay bonded to substrate with exterior glue.
2. Color: As selected by Architect from manufacturer's standard colors.

H. Risers: Steel sheet with manufacturer's standard rust-inhibiting coating or hot-dip galvanized finish.

I. Rails: Structural steel, finished with manufacturer's standard powder coat system.

1. Color: Black.

J. Understructure: Structural steel.

1. Finish: Water-based acrylic rust-inhibiting finish.
2. Color: Manufacturer's standard.

K. Support Column Wheels: Nonmarring, soft, rubber-face wheel assembly under each support column.

1. Include wheels of size, number, and design required to support stands and operate smoothly without damaging the flooring surface, but not less than four per column or less than 3-1/2 inches in diameter and 1 inch wide.

L. Aisle Closures: Manufacturer's standard that produce flush vertical face at aisles when system is stored.

M. Fasteners: Vibration proof, in manufacturer's standard size and material.

N. Accessories:

1. Slip-resistant, abrasive tread surfaces at vertical aisles.
2. Intermediate aisle steps, fully enclosed, at each vertical aisle. Folding, nonremovable mid-aisle handrails located at centerline of each vertical aisle with seating on both sides.
3. End rails (guards) that are telescoping and self-storing.
4. Rear fillers including supports for closing openings between top row and rear wall of adjoining construction.
5. Gap fillers for closing openings between stand units or between stand units and adjoining construction.
6. End panels covering exposed ends of stands in stored position.
7. Removable scorer's table that attaches to mounting sockets installed in telescoping stand unit.

2.4 FABRICATION

A. Fabricate understructure from structural steel members in size, spacing, and form required to support design loads specified in referenced safety standard.

B. Weld understructure to comply with applicable AWS standards.

C. Round corners and edges of components and exposed fasteners to reduce snagging and pinching hazards.

D. Form exposed sheet metal with flat, flush surfaces, level and true in line, and without cracking and grain separation.

E. Seating Supports: Fabricate supports to withstand, without damage to components, the forces imposed by use of stands without failure or other conditions that might impair the usefulness of seating units.

1. Cantilever bench seat supports to produce toe space uninterrupted by vertical bracing.

PART 3 - EXECUTION

3.1 EXAMINATION

A. Examine areas where telescoping stands are to be installed, with Installer present, for compliance with requirements for installation tolerances and other conditions affecting performance of work.

1. Proceed with installation only after unsatisfactory conditions have been corrected.

3.2 INSTALLATION

A. Install telescoping stands to comply with referenced safety standard and manufacturer's written instructions.

3.3 ADJUSTING AND CLEANING

A. On completion of installation, lubricate, test, and adjust each telescoping stand unit so that it operates according to manufacturer's written operating instructions.

B. Clean installed telescoping stands on exposed and semiexposed surfaces. Touch up shop-applied finishes or replace components as required to restore damaged or soiled areas.

3.4 DEMONSTRATION

A. Engage a factory-authorized service representative to train Owner's maintenance personnel to adjust, operate, and maintain telescoping stands. Refer to Division 1 Section "Demonstration and Training."

END OF SECTION 12660

POWER REQUIREMENTS:
1. Wiring and non-fusible safety switch(es) suitable for the line voltage to be provided by electrical contractor or others with circuit protection to each not exceeding 15 amps.
2. Circuit protection devices by others to be accessible when platforms are closed.
3. Verify electrical information:
   Circuit 3 Phase, 208-230 Volts, 60 Hertz.
   Each 1/2 Horse Power Motor Draws 2.0-2.2 amps. Full Load.
   Motors run simultaneously.
4. Junction box(es) by electrical contractor to be mounted at locations TBD, 5' AFF. Typical location shall be at section joints.

Bank 1 - 62'-0" Friction Power
Building Code: IBC 2003
64'-6" Clear Dimension
10 Row - 22" Span - 10.25" Rise
356 seats (SM10)

10 Rows
22" Row space

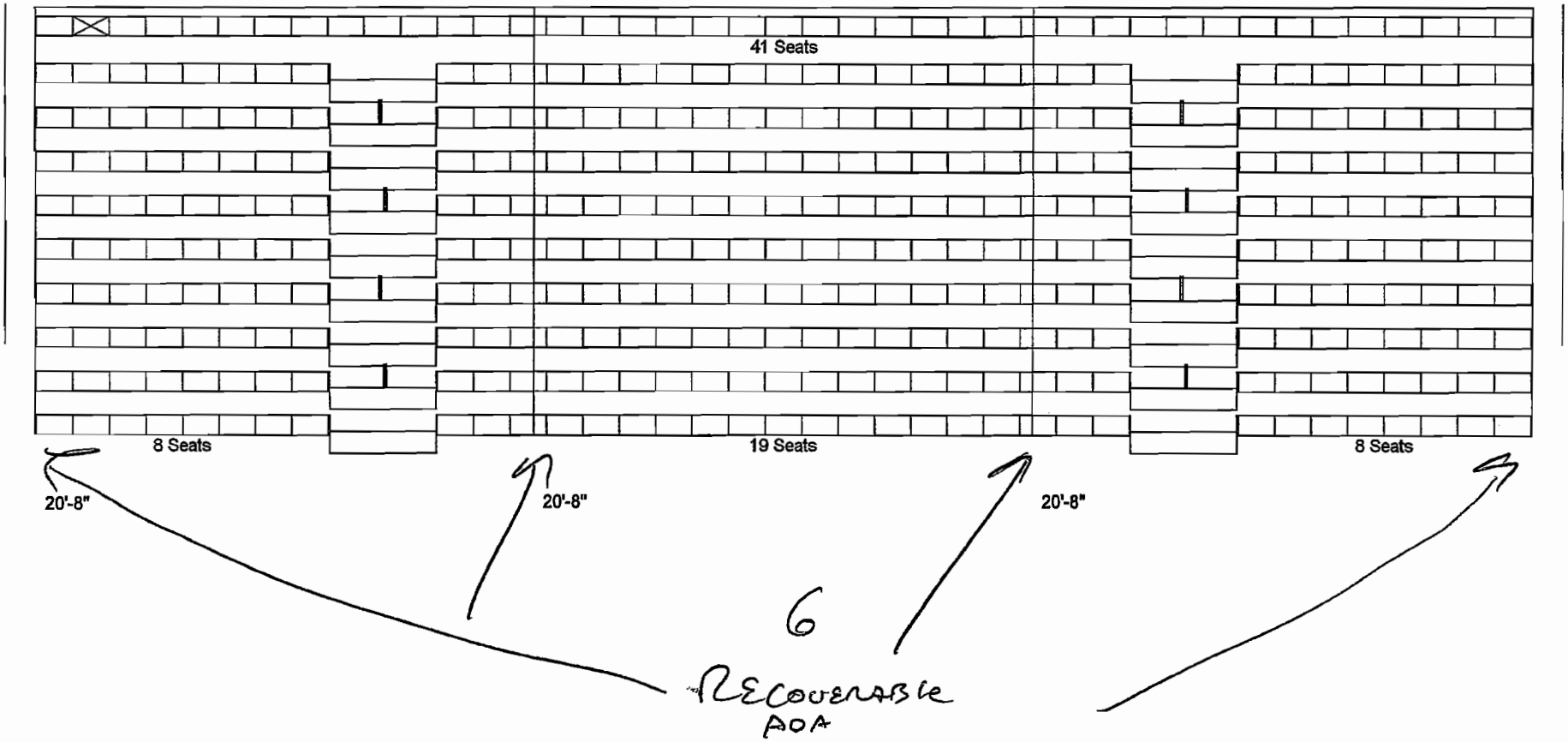

Interkal
5981 East Cork Street, PO Box 2107, Kalamazoo, MI 49003-2107
telephone (269) 349-1521 fax (269) 349-6530

Drawings produced by this program are only as good as the information provided. These drawings are PRELIMINARY only.
All drawings created are subject to Interkal approval for design and construction capability.
Printed: September 19, 2006 v1.13.0

10 Row

Bank 1 - 62'-0" Friction Power
Building Code: IBC 2003
10 Row Side Elevation - Wall Attached
22 Span 10.25 Rise
17'-10 9/16" Extended Dimension
3'-6 11/16" Closed Dimension
18'-11 1/8" Clear Dimension

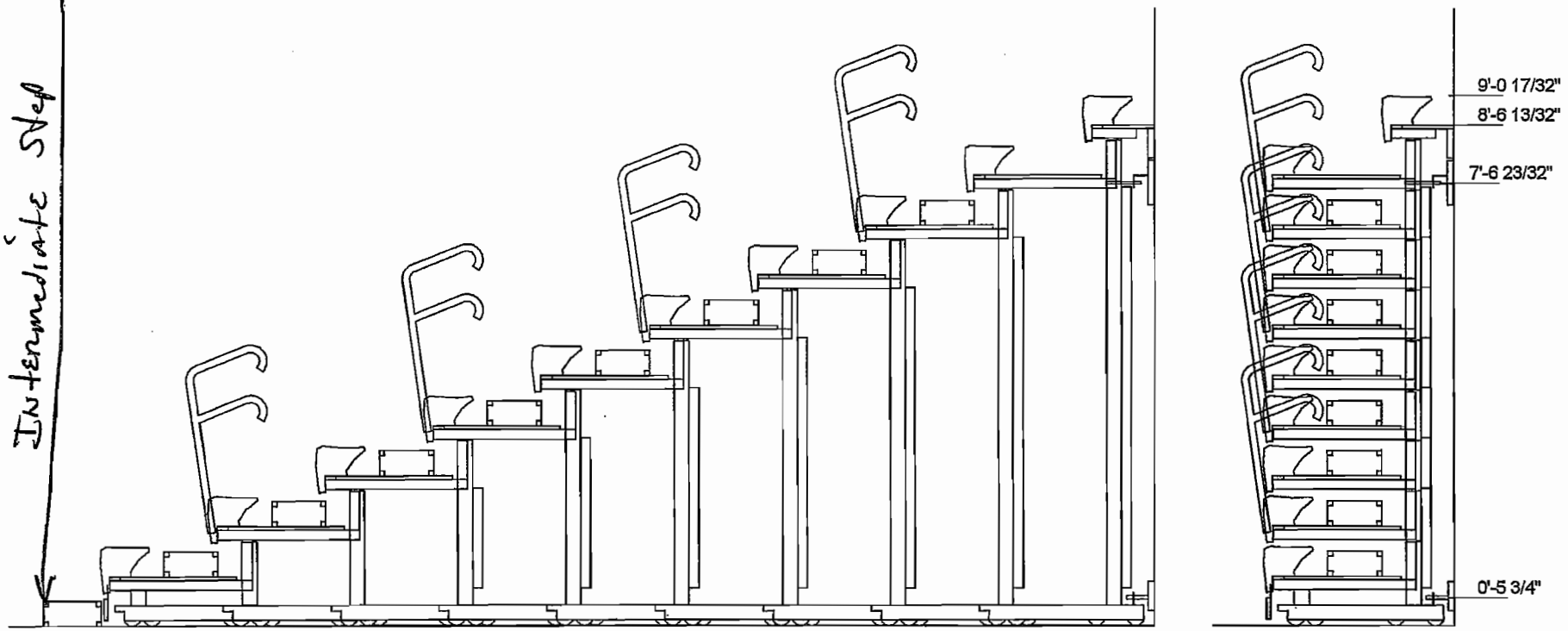

Interkal
5981 East Cork Street, PO Box 2107, Kalamazoo, MI 49003-2107
telephone (269) 349-1521 fax (269) 349-6530

Drawings produced by this program are only as good as the information provided. These drawings are PRELIMINARY only.
All drawings created are subject to Interkal approval for design and construction capability.
Printed: September 19, 2006 v1.13.0

SECTION 13845
LIGHTING CONTROLS

PART 1 - GENERAL

1.1 RELATED DOCUMENTS

A. Drawings and general provisions of the Contract, including General and Supplementary Conditions and Division 1 Specification Sections, apply to this Section.

1.2 SUMMARY

A. This Section includes manually operated lighting controls with relays and control module.

B. Related Sections include the following:

1. Division 16 Section "Lighting Control Devices" for time switches, photoelectric switches, occupancy sensors, and multipole contactors.
2. Division 16 Section "Dimming Controls" for dimming control components.

1.3 DEFINITIONS

A. BACnet: A networking communication protocol that complies with ASHRAE 135.

B. BAS: Building automation system.

C. Low Voltage: As defined in NFPA 70 for circuits and equipment operating at less than 50 V or for remote-control, signaling and power-limited circuits.

D. Monitoring: Acquisition, processing, communication, and display of equipment status data, metered electrical parameter values, power quality evaluation data, event and alarm signals, tabulated reports, and event logs.

E. PC: Personal computer; sometimes plural as "PCs."

F. RS-485: A serial network protocol, similar to RS-232, complying with TIA/EIA-485-A.

1.4 SUBMITTALS

A. Product Data: For control modules, power distribution components, manual switches and plates, and conductors and cables.

B. Shop Drawings: Detail assemblies of standard components, custom assembled for specific application on this Project.

1. Outline Drawings: Indicate dimensions, weights, arrangement of components, and clearance and access requirements.
2. Block Diagram: Show interconnections between components specified in this Section and devices furnished with power distribution system components. Indicate data communication paths and identify networks, data buses, data gateways, concentrators, and other devices to be used. Describe characteristics of network and other data communication lines.
3. Wiring Diagrams: Power, signal, and control wiring. Coordinate nomenclature and presentation with a block diagram.

C. Coordination Drawings: Submit evidence that lighting controls are compatible with connected monitoring and control devices and systems specified in other Sections.

1. Show interconnecting signal and control wiring and interfacing devices that prove compatibility of inputs and outputs.

D. Software and Firmware Operational Documentation:

1. Software operating and upgrade manuals.
2. Program Software Backup: On a magnetic media or compact disc, complete with data files.
3. Device address list.

E. Field quality-control test reports.

F. Software licenses and upgrades required by and installed for operation and programming of digital and analog devices.

G. Operation and Maintenance Data: For lighting controls to include in emergency, operation, and maintenance manuals.

H. Warranty: Special warranty specified in this Section.

1.5 QUALITY ASSURANCE

A. Source Limitations: Obtain lighting control module and power distribution components through one source from a single manufacturer.

B. Electrical Components, Devices, and Accessories: Listed and labeled as defined in NFPA 70, Article 100, by a testing agency acceptable to authorities having jurisdiction, and marked for intended use.

C. Comply with 47 CFR, Subparts A and B, for Class A digital devices.

D. Comply with NFPA 70.

1.6 COORDINATION

A. Coordinate lighting control components to form an integrated interconnection of compatible components.

1. Match components and interconnections for optimum performance of lighting control functions.
2. Coordinate lighting controls with Building Automation System (BAS). Design display graphics showing building areas controlled; include the status of lighting controls in each area.
3. Coordinate lighting controls with that in Sections specifying distribution components that are monitored or controlled by power monitoring and control equipment.

B. Coordinate lighting control components specified in this Section with components specified in Division 16 Section "Panelboards."

1.7 WARRANTY

A. Special Warranty: Manufacturer's standard form in which manufacturer agrees to repair or replace components of lighting controls that fail within specified warranty period.

1. Failures include, but are not limited to, the following:

a. Failure of software input/output to execute switching or dimming commands.
b. Failure of modular relays to operate under manual or software commands.
c. Damage of electronic components due to transient voltage surges.

2. Warranty Period: Two years from date of Substantial Completion.
3. Extended Warranty Period Failure Due to Transient Voltage Surges: Eight years.

a. Extended Warranty Period for Relays: 10 years from date of Substantial Completion.

1.8 EXTRA MATERIALS

A. Furnish extra materials described below that match products installed and that are packaged with protective covering for storage and identified with labels describing contents.

1. Mechanically Held Electrical Relays: Equal to the amount indicated on the lighting control schedules.

PART 2 - PRODUCTS

2.1 MANUFACTURERS

A. Manufacturers: Subject to compliance with requirements, provide products by one of the following:

1. Andover Controls (MCMI) – Area Lighting Control Panels, LCX890 Series

2.2 SYSTEM REQUIREMENTS

A. Expandability: System shall be capable of increasing the number of control functions in the future by 25 percent of current capacity; to include equipment ratings, housing capacities, spare relays, terminals, number of conductors in control cables, and control software.

B. Performance Requirements: Manual switches, an internal timing and control unit, and external sensors or other control signal sources send a signal to a PC-based programmable-system control module that processes the signal according to its programming and routes an open or close command to one or more lighting control relays in the power-supply circuits, or routes variable commands to one or more dimmers, for groups of lighting fixtures or other loads.

2.3 AREA LIGHTING CONTROL PANEL

A. Control Module Description: Comply with UL 916 (LCX890 Series: 8, 16 and 24 channel models only); microprocessor-based, solid-state, 365-day timing and control unit. Output circuits shall be switched on or off by internally programmed time signals or by program-controlled analog or digital signals from external sources. Output circuits shall be pilot-duty relays compatible with power switching devices.Sixteen digital inputs for occupancy sensors or manual signaling that can be programmed to control multi-channel outputs.

2. Eight universal inputs, daylight sensors, and dimming systems with associated daylight sensors.
3. Software: Lighting control software shall be capable of linking switch inputs to relay outputs, retrieving links, viewing relay output status, controlling relay outputs, simulating switch inputs, setting device addresses, and assigning switch input and relay output modes.
4. Automatic Time Adjustment: System shall automatically adjust for leap year and daylight saving time and shall provide weekly routine and annual holiday scheduling.
5. Astronomic Control: Automatic adjustment of dawn and dusk switching.
6. Demand Control: Demand shall be monitored through pulses from a remote meter and shall be controlled by programmed switching of loads. System capability shall include sliding window averaging and programming of load priorities and characteristics. Minimum of two different time-of-day demand schedules shall execute load-management control actions by switching output circuits or by transmitting other types of load-control signals.
7. Confirmation: Each relay or contactor device operated by system shall have auxiliary contacts that provide a confirmation signal to the system of on or off status of device. Retain one of first two subparagraphs below.

    a. Software shall interpret status signals, provide for their display, and initiate failure signals.
    b. Lamp or LED at control module or display panel shall identify status of each controlled circuit.

8. Remote Communication Capability: Allow programming, data-gathering interrogation, status display, and controlled command override from a PC at a remote location over the TSD Wide Area Network.

9. Local Override Capability: Manual, low-voltage control devices shall override programmed shutdown of lighting and shall override other programmed control for intervals that may be duration programmed.
10. Automatic Control of Local Override: Automatic control shall switch lighting off if lighting has been switched on by local override.
11. Automatic battery backup shall provide power to maintain program and system clock operation for 24 hour minimum duration when power is off.
12. Daylight Compensating Switch Control: Control module shall interpret a preset threshold illumination-level signal from a photoelectric relay and shall activate relays controlling power to selected groups of lighting fixtures to turn them on and off to maintain adjustable minimum illumination level as daylight contribution varies.
13. Energy Conservation: Bilevel control of special ballasts to comply with local energy codes.
14. Flick Warning: Programmable momentary turnoff of lights shall warn that programmed shutoff will occur after a preset interval. Warning shall be repeated after a second preset interval before end of programmed override period.
15. Additional Programming: In addition to system programming by the PC, individual control modules shall be programmable using data-entry and -retrieval (such as PCs, or personal digital assistants (PDAs).

B. Modular Relay Panel: Comply with UL 916 (CSA C22.2, No. 205); factory assembled with modular single-pole relays, power supplies, and accessory components required for specified performance.

1. Cabinet: Steel with hinged, locking door.

    a. Barriers separate low-voltage and line-voltage components.
    b. Directory: Mounted on back of door. Identifies each relay as to load groups controlled and each programmed pilot device if any.
    c. Control Power Supply: Transformer and full-wave rectifier with filtered dc output.

2. Single or double-Pole Relays: Mechanically held unless otherwise indicated; split-coil, momentary-pulsed type.

    a. Low-Voltage Leads: Plug connector to the connector strip in cabinet and pilot light power where indicated.
    b. Rated Capacity (Mounted in Relay Panel): 20 A, 125-V ac for tungsten filaments; 20 A, 277-V ac for ballasts.
    c. Endurance: 50,000 cycles at rated capacity.
    d. Mounting: Provision for easy removal and installation in relay cabinet.

C. Line-Voltage Surge Suppression: Field-mounting surge suppressors that comply with Division 16 Section "Transient Voltage Suppression" for Category A locations.

2.4 MANUAL SWITCHES AND PLATES

A. Push-Button Switches: Modular, momentary-contact, low-voltage type.

1. Match color specified in Division 16 Section "Wiring Devices."

B. Manual, Maintained Contact, Full- or Low-Voltage Switch: Comply with Division 16 Section "Wiring Devices."

C. Wall-Box Dimmers: Comply with Division 16 Section "Wiring Devices."

D. Wall Plates: Single and multigang plates as specified in Division 16 Section "Wiring Devices."

E. Legend: Engraved or permanently silk-screened on wall plate where indicated. Use designations indicated on Drawings.

2.5 CONDUCTORS AND CABLES

A. Power Wiring to Supply Side of Class 2 Power Source: Not smaller than No. 12 AWG, complying with Division 16 Section "Conductors and Cables."

B. Classes 2 and 3 Control Cables: Multiconductor cable with copper conductors not smaller than No. 18 AWG, complying with Division 16 Section "Conductors and Cables."

C. Class 1 Control Cables: Multiconductor cable with copper conductors not smaller than No. 14 AWG, complying with Division 16 Section "Conductors and Cables."

D. Digital and Multiplexed Signal Cables: Unshielded, twisted-pair cable with copper conductors, complying with TIA/EIA-568-B.2, Category 6 for horizontal copper cable and with Division 16 Section "Voice and Data Communication Cabling."

PART 3 - EXECUTION

3.1 WIRING INSTALLATION

A. Comply with NECA 1.

B. Wiring Method: Install wiring in raceways except in accessible ceiling areas and gypsum board partitions. Comply with Division 16 Section "Conductors and Cables." Minimum conduit size shall be 1/2 inch.

C. Wiring within Enclosures: Bundle, lace, and train conductors to terminal points. Separate power-limited and non-power-limited conductors according to conductor manufacturer's written instructions.

D. Install field-mounting transient voltage suppressors for lighting control devices in Category A locations that do not have integral line-voltage surge protection.

E. Size conductors according to lighting control device manufacturer's written instructions, unless otherwise indicated.

F. Splices, Taps, and Terminations: Make connections only on numbered terminal strips in terminal cabinets, equipment enclosures, and in junction, pull, and outlet boxes.

G. Identify components and power and control wiring according to Division 16 Section "Electrical Identification."

3.2 FIELD QUALITY CONTROL

A. Manufacturer's Field Service: Engage a factory-authorized service representative to inspect, test and program and adjust field-assembled components and equipment installation, including connections. Report results in writing.

B. Perform the following field tests and inspections and prepare test reports:

1. Test for circuit continuity.
2. Verify that the control module features are operational.
3. Check operation of local override controls.
4. Test system diagnostics by simulating improper operation of several components selected by Architect.

3.3 SOFTWARE INSTALLATION

A. Install and program software with initial settings of adjustable values. Make backup copies of software and user-supplied values. Provide current licenses for software.

3.4 ADJUSTING

A. Occupancy Adjustments: When requested within 12 months of date of Substantial Completion, provide on-site assistance in adjusting sensors and to assist Owner's personnel in making program changes to suit actual occupied conditions. Provide up to four visits to Project during other than normal occupancy hours for this purpose.

3.5 TRAINING

A. Engage a factory-authorized service representative to train Owner's maintenance personnel to adjust, operate, and maintain lighting controls. Provide one (4) hour on-site training session and one (4) hour operator workstation training session.

END OF SECTION 13845

SECTION 13851
FIRE ALARM
(Performance Specifications)

PART 1 - GENERAL

1.1 RELATED DOCUMENTS

A. Drawings and general provisions of the Contract, including General and Supplementary Conditions and Division 1 Specification Sections, apply to this Section.

1.2 SUMMARY

A. This Section includes fire alarm systems. Drawings indicate location of devices for reference purposes. Provide complete functional system as required to meet applicable codes and ADA requirements. Additional required devices not indicated on drawings shall be provided at no additional cost. Provide 120V power circuits as required.

B. Related Sections include the following:

1. Division 8 Section "Door Hardware" for door closers and holders with associated smoke detectors, electric door locks, and release devices that interface with the fire alarm system.

1.3 DEFINITIONS

A. FACP: Fire alarm control panel.

B. LED: Light-emitting diode.

C. NICET: National Institute for Certification in Engineering Technologies.

D. Definitions in NFPA 72 apply to fire alarm terms used in this Section.

1.4 SYSTEM DESCRIPTION

A. Noncoded, dididtal-addressable system; automatic sensitivity control of certain smoke detectors; and multiplexed signal transmission dedicated to fire alarm service only.

1. Interface with existing fire alarm system.

1.5 PERFORMANCE REQUIREMENTS

A. Comply with NFPA 72.

B. Premises protection includes school.

C. Fire alarm signal initiation shall be by one or more of the following devices:

1. Manual stations.
2. Smoke detectors.
3. Automatic sprinkler system water flow.
4. Fire extinguishing system operation.
5. Fire standpipe system.

D. Fire alarm signal shall initiate the following actions:

1. Alarm notification appliances shall operate continuously.
2. Identify alarm at the FACP and remote annunciators.
3. De-energize electromagnetic door holders.
4. Transmit an alarm signal to the remote alarm receiving station.
5. Unlock electric door locks in designated egress paths.
6. Release fire and smoke doors held open by magnetic door holders.
7. Activate voice/alarm communication system.
8. Switch heating, ventilating, and air-conditioning equipment controls to fire alarm mode.
9. Close smoke dampers in air ducts of system serving zone where alarm was initiated.
10. Record events in the system memory.

E. Supervisory signal initiation shall be by one or more of the following devices or actions:
1. Operation of a fire-protection system valve tamper.

F. System trouble signal initiation shall be by one or more of the following devices or actions:

1. Open circuits, shorts and grounds of wiring for initiating device, signaling line, and notification-appliance circuits.
2. Opening, tampering, or removal of alarm-initiating and supervisory signal-initiating devices.
3. Loss of primary power at the FACP.
4. Ground or a single break in FACP internal circuits.
5. Abnormal ac voltage at the FACP.
6. A break in standby battery circuitry.
7. Failure of battery charging.
8. Abnormal position of any switch at the FACP or annunciator.
9. Fire-pump power failure, including a dead-phase or phase-reversal condition.
10. Low-air-pressure switch operation on a dry-pipe or preaction sprinkler system.

G. System Trouble and Supervisory Signal Actions: Ring trouble bell and annunciate at the FACP and remote annunciators. Record the event on system printer.

1.6 SUBMITTALS

A. Product Data: For each type of product indicated.

B. Shop Drawings:

1. Shop Drawings shall be prepared by persons with the following qualifications:
   a. Trained and certified by manufacturer in fire alarm system design.

2. System layout: Provide floor plan with layout of devices and system components.
3. System Operation Description: Detailed description for this Project, including method of operation and supervision of each type of circuit and sequence of operations for manually and automatically initiated system inputs and outputs. Manufacturer's standard descriptions for generic systems are not acceptable.
4. Device Address List: Coordinate with final system programming.
5. System riser diagram with device addresses, conduit sizes, and cable and wire types and sizes.
6. Wiring Diagrams: Power, signal, and control wiring. Include diagrams for equipment and for system with all terminals and interconnections identified. Show wiring color code.
7. Batteries: Size calculations.
8. Duct Smoke Detectors: Performance parameters and installation details for each detector, verifying that each detector is listed for the complete range of air velocity, temperature, and humidity possible when air-handling system is operating.
9. Ductwork Coordination Drawings: Plans, sections, and elevations of ducts, drawn to scale and coordinating the installation of duct smoke detectors and access to them. Show critical dimensions that relate to placement and support of sampling tubes, the detector housing, and remote status and alarm indicators. Locate detectors according to manufacturer's written recommendations.
10. Voice/Alarm Signaling Service: Equipment rack or console layout, grounding schematic, amplifier power calculation, and single-line connection diagram.

C. Qualification Data: For Installer.

D. Field quality-control test reports.

E. Operation and Maintenance Data: For fire alarm system to include in emergency, operation, and maintenance manuals. Comply with NFPA 72, Appendix A, recommendations for Owner's manual. Include abbreviated operating instructions for mounting at the FACP.

F. Submittals to Authorities Having Jurisdiction: In addition to distribution requirements for submittals specified in Division 1 Section "Submittals," make an identical submittal to authorities having jurisdiction. To facilitate review, include copies of annotated Contract Drawings as needed to depict component locations. Resubmit if required to make clarifications or revisions to obtain approval. On receipt of comments from authorities having jurisdiction, submit them to Architect for review.

G. Documentation:

1. Approval and Acceptance: Provide the "Record of Completion" form according to NFPA 72 to Owner, Architect, and authorities having jurisdiction.
2. Record of Completion Documents: Provide the "Permanent Records" according to NFPA 72 to Owner, Architect, and authorities having jurisdiction. Format of the written sequence of operation shall be the optional input/output matrix.
   a. Hard copies on paper to Owner, Architect, and authorities having jurisdiction.

1.7 QUALITY ASSURANCE

A. Installer Qualifications: Personnel shall be trained and certified by manufacturer for installation of units required for this Project.

B. Electrical Components, Devices, and Accessories: Listed and labeled as defined in NFPA 70, Article 100, by a testing agency acceptable to authorities having jurisdiction, and marked for intended use.

1.8 PROJECT CONDITIONS

A. Interruption of Existing Fire Alarm Service: Do not interrupt fire alarm service to facilities occupied by Owner or others unless permitted under the following conditions and then only after arranging to provide temporary guard service according to requirements indicated:

1. Notify Architect, Construction Manager and Owner no fewer than seven days in advance of proposed interruption of fire alarm service.
2. Do not proceed with interruption of fire alarm service without Construction Manager's and Owner's written permission.

1.9 SEQUENCING AND SCHEDULING

A. Existing Fire Alarm Equipment: Maintain fully operational until new equipment has been tested and accepted. As new equipment is installed, label it "NOT IN SERVICE" until it is accepted. Remove labels from new equipment when put into service and label existing fire alarm equipment "NOT IN SERVICE" until removed from the building.

1. Equipment Removal: After acceptance of the new fire alarm system, remove existing disconnected fire alarm equipment.

PART 2 - PRODUCTS

2.1 MANUFACTURERS

A. Manufacturers: Subject to compliance with requirements, provide products by one of the following:

1. FACP and Equipment:

a. National Time and Signal.

2. Wire and Cable:

a. Comtran Corporation.
b. Helix/HiTemp Cables, Inc.; a Draka USA Company.
c. Rockbestos-Suprenant Cable Corporation; a Marmon Group Company.
d. West Penn Wire/CDT; a division of Cable Design Technologies.

3. Audible and Visual Signals shall be system manufacturer or by one of the following:

a. Gentex Corporation.
b. System Sensor; a GE-Honeywell Company

2.2 EXISTING FIRE ALARM SYSTEM

A. Compatibility with Existing Equipment: Fire alarm system and components shall operate as an extension of existing system.

2.3 FACP

A. General Description:

1. Modular, power-limited design with electronic modules, UL 864 listed.
2. Addressable initiation devices that communicate device identity and status.

a. Smoke sensors shall additionally communicate sensitivity setting and allow for adjustment of sensitivity at the FACP.

3. Addressable control circuits for operation of mechanical equipment.

B. Alphanumeric Display and System Controls: Arranged for interface between human operator at the FACP and addressable system components including annunciation and supervision. Display alarm, supervisory, and component status messages and the programming and control menu.

1. Annunciator and Display: Liquid-crystal type, three line(s) of 80 characters, minimum.
2. Keypad: Arranged to permit entry and execution of programming, display, and control commands; and to indicate control commands to be entered into the system for control of smoke-detector sensitivity and other parameters.

C. Circuits:

1. Signaling Line Circuits: NFPA 72, Class A, Style 6.

a. System Layout: Install no more than 30 addressable devices on each signaling line circuit.

2. Notification-Appliance Circuits: NFPA 72, Class A, Style Z.

3. Actuation of alarm notification appliances, emergency voice communications, annunciation, smoke control, elevator recall, and actuation of suppression systems shall occur within 10 seconds after the activation of an initiating device.
4. Electrical monitoring for the integrity of wiring external to the FACP for mechanical equipment shutdown and magnetic door-holding circuits is not required, provided a break in the circuit will cause doors to close and mechanical equipment to shut down.

D. Smoke-Alarm Verification:

1. Initiate audible and visible indication of an "alarm verification" signal at the FACP.
2. Activate a listed and approved "alarm verification" sequence at the FACP and the detector.
3. Record events by the system printer.
4. Sound general alarm if the alarm is verified.
5. Cancel FACP indication and system reset if the alarm is not verified.

E. Notification-Appliance Circuit: Operation shall sound in a temporal pattern, complying with ANSI S3.41.

F. Power Supply for Supervision Equipment: Supply for audible and visual equipment for supervision of the ac power shall be from a dedicated dc power supply, and power for the dc component shall be from the ac supply.

G. Alarm Silencing, Trouble, and Supervisory Alarm Reset: Manual reset at the FACP and remote annunciators, after initiating devices are restored to normal.

1. Silencing-switch operation halts alarm operation of notification appliances and activates an "alarm silence" light. Display of identity of the alarm zone or device is retained.
2. Subsequent alarm signals from other devices or zones reactivate notification appliances until silencing switch is operated again.
3. When alarm-initiating devices return to normal and system reset switch is operated, notification appliances operate again until alarm silence switch is reset.

H. Walk Test: A test mode to allow one person to test alarm and supervisory features of initiating devices. Enabling of this mode shall require the entry of a password. The FACP and annunciators shall display a test indication while the test is underway. If testing ceases while in walk-test mode, after a preset delay, the system shall automatically return to normal.

I. Remote Smoke-Detector Sensitivity Adjustment: Controls shall select specific addressable smoke detectors for adjustment, display their current status and sensitivity settings, and control of changes in those settings. Allow controls to be used to program repetitive, time-scheduled, and automated changes in sensitivity of specific detector groups. Record sensitivity adjustments and sensitivity-adjustment schedule changes in system memory.

1. Transmission to Remote Alarm Receiving Station: Automatically transmit alarm, trouble, and supervisory signals to a remote alarm station through a digital alarm communicator transmitter and telephone lines.
2. Notification-Appliance Circuits: NFPA 72, Class [A] [B].

J. Service Modem: Ports shall be RS-232 for system printer and for connection to a dial-in terminal unit.

1. The dial-in port shall allow remote access to the FACP for programming changes and system diagnostic routines. Access by a remote terminal shall be by encrypted password algorithm.

K. Primary Power: 24-V dc obtained from 120-V ac service and a power-supply module. Initiating devices, notification appliances, signaling lines, trouble signal, supervisory signal, supervisory and digital alarm communicator transmitter shall be powered by the 24-V dc source.

1. The alarm current draw of the entire fire alarm system shall not exceed 80 percent of the power-supply module rating.
2. Power supply shall have a dedicated fused safety switch for this connection at the service entrance equipment. Paint the switch box red and identify it with "FIRE ALARM SYSTEM POWER."

L. Secondary Power: 24-V dc supply system with batteries and automatic battery charger and an automatic transfer switch.

1. Batteries: Vented, wet-cell pocket, plate nickel cadmium.
2. Battery and Charger Capacity: Comply with NFPA 72.

M. Surge Protection:

1. Install surge protection on normal ac power for the FACP and its accessories. Comply with Division 16 Section "Transient Voltage Suppression" for auxiliary panel suppressors.
2. Install surge protectors recommended by FACP manufacturer. Install on all system wiring external to the building housing the FACP.

2.4 MANUAL FIRE ALARM BOXES

A. Description: UL 38 listed; finished in red with molded, raised-letter operating instructions in contrasting color. Station shall show visible indication of operation. Mounted on recessed outlet box; if indicated as surface mounted, provide manufacturer's surface back box.

1. Double-action mechanism requiring two actions to initiate an alarm, breaking-glass or plastic-rod type. With integral addressable module, arranged to communicate manual-station status (normal, alarm, or trouble) to the FACP.
2. Station Reset: Key- or wrench-operated switch.

2.5 SYSTEM SMOKE DETECTORS

A. General Description:

1. UL 268 listed, operating at 24-V dc, nominal.
2. Integral Addressable Module: Arranged to communicate detector status (normal, alarm, or trouble) to the FACP.

3. Plug-in Arrangement: Detector and associated electronic components shall be mounted in a plug-in module that connects to a fixed base. Provide terminals in the fixed base for connection of building wiring.
4. Self-Restoring: Detectors do not require resetting or readjustment after actuation to restore them to normal operation.
5. Integral Visual-Indicating Light: LED type. Indicating detector has operated and power-on status.
6. Remote Control: Unless otherwise indicated, detectors shall be analog-addressable type, individually monitored at the FACP for calibration, sensitivity, and alarm condition, and individually adjustable for sensitivity from the FACP.
    a. Fixed-temperature sensing shall be independent of rate-of-rise sensing and shall be settable at the FACP to operate at 135 or 155 deg F.
    b. Provide multiple levels of detection sensitivity for each sensor.

B. Photoelectric Smoke Detectors:

1. Sensor: LED or infrared light source with matching silicon-cell receiver.
2. Detector Sensitivity: Between 2.5 and 3.5 percent/foot smoke obscuration when tested according to UL 268A.

C. Ionization Smoke Detector:

1. Sensor: Responsive to both visible and invisible products of combustion. Self-compensating for changes in environmental conditions.
2. Detector Sensitivity: Between 0.5 and 1.7 percent/foot smoke obscuration when tested according to UL 268A.

D. Remote Air-Sampling Detector System: Includes air-sampling pipe network, a laser-based photoelectric detector, a sample transport fan, and a control unit.

1. UL 268 listed, operating at 24-V dc, nominal.
2. Pipe Network: Electrical metallic tubing connects control unit with designated sampling holes.
3. Smoke Detector: Particle-counting type with continuous laser beam. Sensitivity adjustable to a minimum of three preset values.
4. Sample Transport Fan: Centrifugal type, creating a minimum static pressure of 0.05-inch wg (12.5 Pa) at all sampling ports.
5. Control Unit: Single or multizone unit as indicated. Provides same system power supply, supervision, and alarm features as specified for the central FACP plus separate trouble indication for airflow and detector problems.
6. Signals to the Central FACP: Any type of local system trouble is reported to the central FACP as a composite "trouble" signal. Alarms on each system zone are individually reported to the central FACP as separately identified zones.

E. Duct Smoke Detectors:

1. Photoelectric Smoke Detectors:

    a. Sensor: LED or infrared light source with matching silicon-cell receiver.
    b. Detector Sensitivity: Between 2.5 and 3.5 percent/foot smoke obscuration when tested according to UL 268A.

2. UL 268A listed, operating at 24-V dc, nominal.
3. Integral Addressable Module: Arranged to communicate detector status (normal, alarm, or trouble) to the FACP.
4. Plug-in Arrangement: Detector and associated electronic components shall be mounted in a plug-in module that connects to a fixed base. The fixed base shall be designed for mounting directly to the air duct. Provide terminals in the fixed base for connection to building wiring.

    a. Weatherproof Duct Housing Enclosure: UL listed for use with the supplied detector. The enclosure shall comply with NEMA 250 requirements for Type 4X.

5. Self-Restoring: Detectors shall not require resetting or readjustment after actuation to restore them to normal operation.
6. Integral Visual-Indicating Light: LED type. Indicating detector has operated and power-on status. Provide remote status and alarm indicator and test station where indicated.
7. Remote Control: Unless otherwise indicated, detectors shall be analog-addressable type, individually monitored at the FACP for calibration, sensitivity, and alarm condition, and individually adjustable for sensitivity from the FACP.
8. Each sensor shall have multiple levels of detection sensitivity.
9. Sampling Tubes: Design and dimensions as recommended by manufacturer for the specific duct size, air velocity, and installation conditions where applied.
10. Relay Fan Shutdown: Rated to interrupt fan motor-control circuit.

2.6 HEAT DETECTORS

A. General: UL 521 listed.

B. Heat Detector, Combination Type: Actuated by either a fixed temperature of 135 deg F or rate-of-rise of temperature that exceeds 15 deg F per minute, unless otherwise indicated.

1. Mounting: Plug-in base, interchangeable with smoke-detector bases.
2. Integral Addressable Module: Arranged to communicate detector status (normal, alarm, or trouble) to the FACP.

2.7 NOTIFICATION APPLIANCES

A. Description: Equipped for mounting as indicated and with screw terminals for system connections.

1. Combination Devices: Factory-integrated audible and visible devices in a single-mounting assembly.

B. Chimes, High-Level Output: Vibrating type, 81-dBA minimum rated output. Housing color shall be off-white.

C. Visible Alarm Devices: Xenon strobe lights listed under UL 1971, with clear or nominal white polycarbonate lens mounted on an aluminum faceplate. The word "FIRE" is engraved in minimum 1-inch- high letters on the lens. Housing color shall be off-white.

1. Adjustable Rated Light Output: 30, 75 or 110 candela or as required to meet minimum ADA requirements.
2. Strobe Leads: Factory connected to screw terminals.
3. Housing color shall be off-white.

2.8 SPRINKLER SYSTEM REMOTE INDICATORS

A. Remote status and alarm indicator and test stations, with LED indicating lights. Light is connected to flash when the associated device is in an alarm or trouble mode. Lamp is flush mounted in a single-gang wall plate. A red, laminated, phenolic-resin identification plate at the indicating light identifies, in engraved white letters, device initiating the signal and room where the smoke detector or valve is located. For water-flow switches, the identification plate also designates protected spaces downstream from the water-flow switch.

2.9 MAGNETIC DOOR HOLDERS (by others)

A. Description: Units are equipped for wall or floor mounting as indicated and are complete with matching door plate.

1. Electromagnet: Requires no more than 3 W to develop 25-lbf holding force.
2. Wall-Mounted Units: Flush mounted, unless otherwise indicated.
3. Rating: 24-V ac or dc.
4. Rating: 120-V ac.

B. Material and Finish: Match door hardware.

2.10 ADDRESSABLE INTERFACE DEVICE

A. Description: Microelectronic monitor module listed for use in providing a system address for listed alarm-initiating devices for wired applications with normally open contacts.

2.11 WIRE AND CABLE

A. Wire and cable for fire alarm systems shall be UL listed and labeled as complying with NFPA 70, Article 760.

B. Signaling Line Circuits: Twisted, shielded pair, not less than No. 18 AWG and as recommended by system manufacturer.

1. Circuit Integrity Cable: Twisted shielded pair, NFPA 70 Article 760, Classification CI, for power-limited fire alarm signal service. UL listed as Type FPL, and complying with requirements in UL 1424 and in UL 2196 for a 2-hour rating.

C. Non-Power-Limited Circuits: Solid-copper conductors with 600-V rated, 75 deg C, color-coded insulation.

1. Low-Voltage Circuits: No. 18 AWG, minimum.
2. Line-Voltage Circuits: No. 12 AWG, minimum.

3. Multiconductor Armored Cable: NFPA 70 Type MC, copper conductors, TFN/THHN conductor insulation, copper drain wire, copper armor with outer jacket with red identifier stripe, UL listed for fire alarm and cable tray installation, plenum rated, and complying with requirements in UL 2196 for a 2-hour rating.

PART 3 - EXECUTION

3.1 EQUIPMENT INSTALLATION

A. Connecting to Existing Equipment: Verify that existing fire alarm system is operational before making changes or connections.

1. Connect new equipment to the existing control panel in the existing part of the building.
2. Connect new equipment to the existing monitoring equipment at the Supervising Station.
3. Expand, modify, and supplement the existing control/monitoring equipment as necessary to extend the existing control/monitoring functions to the new points. New components shall be capable of merging with the existing configuration without degrading the performance of either system.

B. HVAC: Locate detectors not closer than 3 feet from air-supply diffuser or return-air opening.

C. Duct Smoke Detectors: Comply with NFPA 72 and NFPA 90A. Install sampling tubes so they extend the full width of the duct.

D. Remote Status and Alarm Indicators: Install near each smoke detector and each sprinkler water-flow switch and valve-tamper switch that is not readily visible from normal viewing position.

E. Audible Alarm-Indicating Devices: Install not less than 6 inches below the ceiling or 96 inches above finished; whichever is lower. Install bells and horns on flush-mounted back boxes with the device-operating mechanism concealed behind a grille.

F. Visible Alarm-Indicating Devices: Install not less than 6 inches below the ceiling or 96 inches above finished; whichever is lower.

G. Audible/Visible Alarm-Indicating Devices: Install not less than 6 inches below the ceiling or 96 inches above finished; whichever is lower.

H. Device Location-Indicating Lights: Locate in public space near the device they monitor.

I. FACP: Mount with tops of cabinets not more than 72 inches above the finished floor.

J. Annunciator: Install with top of panel not more than 72 inches above the finished floor.

K. Fire Shutters: Provide with smoke detectors and interface with fire alarm system.

L. Fire/Smoke dampers: Provide with duct detectors to control operation of dampers. Connect dampers to 120V circuit of closest duplex receptacles.

3.2 WIRING INSTALLATION

A. Install wiring according to the following:

1. NECA 1.
2. TIA/EIA 568-A.

B. Wiring Method:

1. Cables and raceways used for fire alarm circuits, and equipment control wiring associated with the fire alarm system, may not contain any other wire or cable.
2. Fire-Rated Cables: Use of 2-hour fire-rated fire alarm cables, NFPA 70 Types MI and CI, is not permitted.
3. Signaling Line Circuits: Power-limited fire alarm cables shall not be installed in the same cable or raceway as signaling line circuits.
4. Cables shall be plenum rated concealed in accessible areas and shall be in metal raceways in non-accessible areas.

C. Wiring within Enclosures: Separate power-limited and non-power-limited conductors as recommended by manufacturer. Install conductors parallel with or at right angles to sides and back of the enclosure. Bundle, lace, and train conductors to terminal points with no excess. Connect conductors that are terminated, spliced, or interrupted in any enclosure associated with the fire alarm system to terminal blocks. Mark each terminal according to the system's wiring diagrams. Make all connections with approved crimp-on terminal spade lugs, pressure-type terminal blocks, or plug connectors.

D. Cable Taps: Use numbered terminal strips in junction, pull, and outlet boxes, cabinets, or equipment enclosures where circuit connections are made.

E. Color-Coding: Color-code fire alarm conductors differently from the normal building power wiring. Use one color-code for alarm circuit wiring and a different color-code for supervisory circuits. Color-code audible alarm-indicating circuits differently from alarm-initiating circuits. Use different colors for visible alarm-indicating devices. Paint fire alarm system junction boxes and covers red.

F. Risers: Install at least two vertical cable risers to serve the fire alarm system. Separate risers in close proximity to each other with a minimum 1-hour-rated wall, so the loss of one riser does not prevent the receipt or transmission of signals from other floors or zones.

3.3 IDENTIFICATION

A. Identify system components, wiring, cabling, and terminals according to Division 16 Section "Basic Electrical Materials and Methods."

B. Install instructions frame in a location visible from the FACP.

C. Paint power-supply disconnect switch red and label "FIRE ALARM."

3.4 GROUNDING

A. Ground the FACP and associated circuits; comply with IEEE 1100. Install a ground wire from main service ground to the FACP.

3.5 FIELD QUALITY CONTROL

A. Manufacturer's Field Service: Engage a factory-authorized service representative to inspect, test, and adjust field-assembled components and equipment installation, including connections, and to assist in field testing. Report results in writing.

B. Testing Agency: Engage a qualified testing and inspecting agency to perform the following field tests and inspections and prepare test reports:

C. Perform the following field tests and inspections and prepare test reports:

1. Before requesting final approval of the installation, submit a written statement using the form for Record of Completion shown in NFPA 72.
2. Perform each electrical test and visual and mechanical inspection listed in NFPA 72. Certify compliance with test parameters. All tests shall be conducted under the direct supervision of a NICET technician certified under the Fire Alarm Systems program at Level III.

    a. Include the existing system in tests and inspections.

3. Visual Inspection: Conduct a visual inspection before any testing. Use as-built drawings and system documentation for the inspection. Identify improperly located, damaged, or nonfunctional equipment, and correct before beginning tests.
4. Testing: Follow procedure and record results complying with requirements in NFPA 72.

    a. Detectors that are outside their marked sensitivity range shall be replaced.

5. Test and Inspection Records: Prepare according to NFPA 72, including demonstration of sequences of operation by using the matrix-style form in Appendix A in NFPA 70.

3.6 ADJUSTING

A. Occupancy Adjustments: When requested within 12 months of date of Substantial Completion, provide on-site assistance in adjusting system to suit actual occupied conditions. Provide up to two visits to Project outside normal occupancy hours for this purpose.

B. Follow-Up Tests and Inspections: After date of Substantial Completion, test the fire alarm system complying with testing and visual inspection requirements in NFPA 72. Perform tests and inspections listed for three monthly, and one quarterly, periods.

C. Annual Test and Inspection: One year after date of Substantial Completion, test the fire alarm system complying with the testing and visual inspection requirements in NFPA 72. Perform tests and inspections listed for monthly, quarterly, semiannual, and annual periods. Use forms developed for initial tests and inspections.

3.7 DEMONSTRATION

A. Engage a factory-authorized service representative to train Owner's maintenance personnel to adjust, operate, and maintain the fire alarm system, appliances, and devices. Refer to Division 1 Section "Closeout Procedures."

END OF SECTION 13851

SECTION 13915
FIRE-SUPPRESSION PIPING

PART 1 - GENERAL

1.1 RELATED DOCUMENTS

A. Drawings and general provisions of the Contract, including General and Supplementary Conditions and Division 1 Specification Sections, apply to this Section.

1.2 SUMMARY

A. This Section includes the following fire-suppression piping inside the building:

1. Wet-pipe sprinkler systems.

B. Related Sections include the following:

1. Division 2 Section "Water Distribution" for piping outside the building.
2. Division 10 Section "Fire-Protection Specialties" for cabinets and fire extinguishers.
3. Division 13 Section "Fire Alarm" for alarm devices not specified in this Section.

1.3 SYSTEM DESCRIPTIONS

A. Wet-Pipe Sprinkler System: Automatic sprinklers are attached to piping containing water and that is connected to water supply. Water discharges immediately from sprinklers when they are opened. Sprinklers open when heat melts fusible link or destroys frangible device. Hose connections are included if indicated.

1.4 PERFORMANCE REQUIREMENTS

A. Fire-suppression sprinkler system design shall be approved by authorities having jurisdiction.

1. Margin of Safety for Available Water Flow and Pressure: 10 percent, including losses through water-service piping, valves, and backflow preventers.
2. Sprinkler Occupancy Hazard Classifications:
   a. Building Service Areas: Ordinary Hazard, Group 1.
   b. Electrical Equipment Rooms: Ordinary Hazard, Group 1.
   c. General Storage Areas: Ordinary Hazard, Group 1.
   d. Mechanical Equipment Rooms: Ordinary Hazard, Group 1.
   e. Office and Public Areas: Light Hazard.

f. Science Lab Areas: Ordinary Hazard, Group 2.

3. Minimum Density for Automatic-Sprinkler Piping Design:

a. Light-Hazard Occupancy: 0.10 gpm over 1500-sq. ft. area.
b. Ordinary-Hazard, Group 1 Occupancy: 0.15 gpm over 1500-sq. ft. area.
c. Ordinary-Hazard, Group 2 Occupancy: 0.20 gpm over 1500-sq. ft. area.
d. Special Occupancy Hazard: As determined by authorities having jurisdiction.

1.5 SUBMITTALS

A. Product Data: For the following:

1. Pipe hangers and supports.
2. Valves, including listed fire-protection valves, unlisted general-duty valves, and specialty valves and trim.
3. Sprinklers, escutcheons, and guards. Include sprinkler flow characteristics, mounting, finish, and other pertinent data.
4. Fire department connections, including type; number, size, and arrangement of inlets; caps and chains; size and direction of outlet; escutcheon and marking; and finish.
5. Alarm devices, including electrical data.

B. Fire-hydrant flow test report.

C. Approved Sprinkler Piping Drawings: Working plans, prepared according to NFPA 13, that have been approved by authorities having jurisdiction, including hydraulic calculations, if applicable.

D. Operation and Maintenance Data: For sprinkler specialties to include in emergency, operation, and maintenance manuals.

1.6 QUALITY ASSURANCE

A. Installer Qualifications:

1. Installer's responsibilities include designing, fabricating, and installing fire-suppression systems and providing professional engineering services needed to assume engineering responsibility. Base calculations on results of fire-hydrant flow test.

B. NFPA Standards: Fire-suppression-system equipment, specialties, accessories, installation, and testing shall comply with the following:

1. NFPA 13, "Installation of Sprinkler Systems."

1.7 COORDINATION

A. Coordinate layout and installation of sprinklers with other construction that penetrates ceilings, including light fixtures, HVAC equipment, and partition assemblies.

1.8 EXTRA MATERIALS

A. Furnish extra materials described below that match products installed and that are packaged with protective covering for storage and identified with labels describing contents.

1. Sprinkler Cabinets: Finished, wall-mounting, steel cabinet with hinged cover, with space for minimum of six spare sprinklers plus sprinkler wrench. Include number of sprinklers required by NFPA 13 and sprinkler wrench. Include separate cabinet with sprinklers and wrench for each type of sprinkler on Project.

PART 2 - PRODUCTS

2.1 MANUFACTURERS

A. In other Part 2 articles where titles below introduce lists, the following requirements apply to product selection:

1. Manufacturers: Subject to compliance with requirements, provide products by one of the manufacturers specified.

2.2 DUCTILE-IRON PIPE AND FITTINGS

A. Mechanical-Joint, Ductile-Iron Pipe: AWWA C151, with mechanical-joint bell end and plain end.

1. Mechanical-Joint, Ductile-Iron Fittings: AWWA C110, ductile- or gray-iron standard pattern.
2. Glands, Gaskets, and Bolts: AWWA C111, ductile- or gray-iron gland, rubber gasket, and steel bolts and nuts.

B. Push-on-Joint, Ductile-Iron Pipe: AWWA C151, with push-on-joint bell end and plain end.

1. Push-on-Joint, Ductile-Iron Fittings: AWWA C110, ductile- or gray-iron standard pattern.
2. Gaskets: AWWA C111, rubber.

2.3 STEEL PIPE AND FITTINGS

A. Threaded-End, Standard-Weight Steel Pipe: ASTM A 53/A 53M, ASTM A 135, or ASTM A 795, with factory- or field-formed threaded ends.

1. Cast-Iron Threaded Flanges: ASME B16.1.
2. Malleable-Iron Threaded Fittings: ASME B16.3.
3. Gray-Iron Threaded Fittings: ASME B16.4.
4. Steel Threaded Pipe Nipples: ASTM A 733, made of ASTM A 53/A 53M or ASTM A 106, Schedule 40, seamless steel pipe. Include ends matching joining method.
5. Steel Threaded Couplings: ASTM A 865.

B. Grooved-End, Schedule 10 Steel Pipe: ASTM A 135 or ASTM A 795, Schedule 10 in NPS 5 and smaller; and NFPA 13-specified wall thickness in NPS 6 to NPS 10; with factory- or field-formed, roll-grooved ends.

1. Grooved-Joint Piping Systems:

a. Manufacturers:

1) Central Sprinkler Corp.
2) Star Pipe Products; Star Fittings Div.
3) Victaulic Co. of America.

b. Grooved-End Fittings: UL-listed, ASTM A 536, ductile-iron casting with OD matching steel-pipe OD.

c. Grooved-End-Pipe Couplings: UL 213 and AWWA C606, rigid pattern, unless otherwise indicated; gasketed fitting matching steel-pipe OD. Include ductile-iron housing with keys matching steel-pipe and fitting grooves, prelubricated rubber gasket listed for use with housing, and steel bolts and nuts.

2.4 SPRINKLER SPECIALTY FITTINGS

A. Sprinkler specialty fittings shall be UL listed or FMG approved, with 175-psig minimum working-pressure rating, and made of materials compatible with piping.

B. Outlet Specialty Fittings:

1. Manufacturers:

a. Central Sprinkler Corp.
b. Star Pipe Products; Star Fittings Div.
c. Victaulic Co. of America.

2. Mechanical-T and -Cross Fittings: UL 213, ductile-iron housing with gaskets, bolts and nuts, and threaded, locking-lug, or grooved outlets.

3. Snap-On and Strapless Outlet Fittings: UL 213, ductile-iron housing or casting with gasket and threaded outlet.

C. Sprinkler Drain and Alarm Test Fittings: Cast- or ductile-iron body; with threaded or locking-lug inlet and outlet, test valve, and orifice and sight glass.

1. Manufacturers:

a. Central Sprinkler Corp.
b. Fire-End and Croker Corp.
c. Viking Corp.
d. Victaulic Co. of America.

D. Sprinkler Branch-Line Test Fittings: Brass body with threaded inlet, capped drain outlet, and threaded outlet for sprinkler.

1. Manufacturers:

    a. Elkhart Brass Mfg. Co., Inc.
    b. Fire-End and Croker Corp.
    c. Potter-Roemer; Fire-Protection Div.

E. Sprinkler Inspector's Test Fitting: Cast- or ductile-iron housing with threaded inlet and drain outlet and sight glass.

1. Manufacturers:

    a. AGF Manufacturing Co.
    b. Central Sprinkler Corp.
    c. G/J Innovations, Inc.
    d. Triple R Specialty of Ajax, Inc.

F. Drop-Nipple Fittings: UL 1474, adjustable with threaded inlet and outlet, and seals.

1. Manufacturers:

    a. CECA, LLC.
    b. Merit.

2.5 SPRINKLERS

A. Sprinklers shall be UL listed or FMG approved, with 175-psig minimum pressure rating.

B. Manufacturers:

1. Globe Fire Sprinkler Corporation.
2. Grinnell Fire Protection.
3. Reliable Automatic Sprinkler Co., Inc.
4. Star Sprinkler Inc.
5. Victaulic Co. of America.
6. Viking Corp.

C. Automatic Sprinklers: With heat-responsive element complying with the following:

1. UL 199, for nonresidential applications.

D. Sprinkler Types and Categories: Nominal 1/2-inch orifice for "Ordinary" temperature classification rating, unless otherwise indicated or required by application.

1. Open Sprinklers: UL 199, without heat-responsive element.

    a. Orifice: 1/2 inch, with discharge coefficient K between 5.3 and 5.8.

E. Sprinkler types, features, and options as follows:

1. Concealed ceiling sprinklers, including cover plate.
2. Extended-coverage sprinklers.

3. Flush ceiling sprinklers, including escutcheon.
4. Pendent sprinklers.
5. Pendent, dry-type sprinklers.
6. Sidewall sprinklers.
7. Sidewall, dry-type sprinklers.
8. Upright sprinklers.

F. Sprinkler Finishes: White Teflon and bronze.

G. Special Coatings: Wax, lead, and corrosion-resistant paint.

H. Sprinkler Escutcheons: Materials, types, and finishes for the following sprinkler mounting applications. Escutcheons for concealed, flush, and recessed-type sprinklers are specified with sprinklers.

1. Ceiling Mounting: Steel, white finish, one piece, flat.
2. Sidewall Mounting: Steel, white finish, one piece, flat.

I. Sprinkler Guards: Wire-cage type, including fastening device for attaching to sprinkler.

2.6 PRESSURE GAGES

A. Manufacturers:

1. AMETEK, Inc.; U.S. Gauge.
2. Dresser Equipment Group; Instrument Div.
3. Marsh Bellofram.

B. Description: UL 393, 3-1/2- to 4-1/2-inch- diameter, dial pressure gage with range of 0 to 250 psig minimum.

1. Water System Piping: Include caption "WATER" or "AIR/WATER" on dial face.
2. Air System Piping: Include caption "AIR" or "AIR/WATER" on dial face.

PART 3 - EXECUTION

3.1 PREPARATION

A. Perform fire-hydrant flow test according to NFPA 13 and NFPA 291. Use results for system design calculations required in Part 1 "Quality Assurance" Article.

B. Report test results promptly and in writing.

3.2 PIPING APPLICATIONS, GENERAL

A. Flanges, flanged fittings, unions, nipples, and transition and special fittings with finish and pressure ratings same as or higher than system's pressure rating may be used in aboveground applications, unless otherwise indicated.

3.3 SPRINKLER SYSTEM PIPING APPLICATIONS

A. Standard-Pressure, Wet-Pipe Sprinkler System, 175-psig Maximum Working Pressure:

1. Sprinkler-Piping Fitting Option: Specialty sprinkler fittings, NPS 2 and smaller, including mechanical-T and -cross fittings, may be used downstream from sprinkler zone valves.
2. NPS 2 and Smaller: Threaded-end, black, standard-weight steel pipe; cast- or malleable-iron threaded fittings; and threaded joints.
3. NPS 2-1/2 to NPS 3-1/2: Grooved-end, black, standard-weight steel pipe; grooved-end fittings; grooved-end-pipe couplings; and grooved joints.

3.4 VALVE APPLICATIONS

A. Drawings indicate valve types to be used. Where specific valve types are not indicated, the following requirements apply:

1. Listed Fire-Protection Valves: UL listed and FMG approved for applications where required by NFPA 13.

a. Shutoff Duty: Use gate valves.

3.5 JOINT CONSTRUCTION

A. Refer to Division 15 Section "Basic Mechanical Materials and Methods" for basic piping joint construction.

B. Grooved Joints: Assemble joints with listed coupling and gasket, lubricant, and bolts.

1. Steel Pipe: Square-cut or roll-groove piping as indicated. Use grooved-end fittings and rigid, grooved-end-pipe couplings, unless otherwise indicated.

3.6 PIPING INSTALLATION

A. Refer to Division 15 Section "Basic Mechanical Materials and Methods" for basic piping installation.

B. Locations and Arrangements: Drawing plans, schematics, and diagrams indicate general location and arrangement of piping. Install piping as indicated, as far as practical.

1. Deviations from approved working plans for piping require written approval from authorities having jurisdiction. File written approval with Architect before deviating from approved working plans.

C. Use approved fittings to make changes in direction, branch takeoffs from mains, and reductions in pipe sizes.

D. Install unions adjacent to each valve in pipes NPS 2 and smaller. Unions are not required on flanged devices or in piping installations using grooved joints.

E. Install flanges or flange adapters on valves, apparatus, and equipment having NPS 2-1/2 and larger connections.

F. Install "Inspector's Test Connections" in sprinkler system piping, complete with shutoff valve, sized and located according to NFPA 13.

G. Install sprinkler piping with drains for complete system drainage.

H. Hangers and Supports: Comply with NFPA 13 for hanger materials.

1. Install sprinkler system piping according to NFPA 13.

I. Fill wet-pipe sprinkler system piping with water.

J. Install piping with grooved joints according to manufacturer's written instructions. Construct rigid piping joints, unless otherwise indicated.

3.7 VALVE INSTALLATION

A. Install listed fire-protection valves, unlisted general-duty valves, specialty valves and trim, controls, and specialties according to NFPA 13 and authorities having jurisdiction.

3.8 SPRINKLER APPLICATIONS

A. Drawings indicate sprinkler types to be used. Where specific types are not indicated, use the following sprinkler types:

1. Rooms without Ceilings: Upright sprinklers.
2. Rooms with Suspended Ceilings: Concealed sprinklers.
3. Wall Mounting: Sidewall sprinklers.
4. Sprinkler Finishes:

a. Upright, Pendent, and Sidewall Sprinklers: White Teflon in finished spaces exposed to view; rough bronze in unfinished spaces not exposed to view; wax coated where exposed to acids, chemicals, or other corrosive fumes.
b. Concealed Sprinklers: Rough brass, with factory-painted white cover plate.

3.9 LABELING AND IDENTIFICATION

A. Install labeling and pipe markers on equipment and piping according to requirements in NFPA 13 and in Division 15 Section "Mechanical Identification."

3.10 FIELD QUALITY CONTROL

A. Perform the following field tests and inspections and prepare test reports:

1. Leak Test: After installation, charge system and test for leaks. Repair leaks and retest until no leaks exist.

2. Test and adjust controls and safeties. Replace damaged and malfunctioning controls and equipment.
3. Energize circuits to electrical equipment and devices.
4. Flush, test, and inspect sprinkler systems according to NFPA 13, "Systems Acceptance" Chapter.

B. Report test results promptly and in writing to Architect and authorities having jurisdiction.

3.11 CLEANING AND PROTECTION

A. Clean dirt and debris from sprinklers.

B. Remove and replace sprinklers with paint other than factory finish.

C. Protect sprinklers from damage until Substantial Completion.

3.12 DEMONSTRATION

A. Engage a factory-authorized service representative to train Owner's maintenance personnel to adjust, operate, and maintain specialty valves.

END OF SECTION 13915

SECTION 15050
BASIC MECHANICAL MATERIALS AND METHODS

PART 1 - GENERAL

1.1 RELATED DOCUMENTS

A. Drawings and general provisions of the Contract, including General and Supplementary Conditions and Division 1 Specification Sections, apply to this Section.

1.2 SUMMARY

A. This Section includes the following:

1. Piping materials and installation instructions common to most piping systems.
2. Transition fittings.
3. Dielectric fittings.
4. Mechanical sleeve seals.
5. Sleeves.
6. Escutcheons.
7. Grout.
8. Mechanical demolition.
9. Equipment installation requirements common to equipment sections.
10. Painting and finishing.
11. Concrete bases.
12. Supports and anchorages.

1.3 DEFINITIONS

A. Finished Spaces: Spaces other than mechanical and electrical equipment rooms, furred spaces, pipe and duct shafts, unheated spaces immediately below roof, spaces above ceilings, unexcavated spaces, crawlspaces, and tunnels.

B. Exposed, Interior Installations: Exposed to view indoors. Examples include finished occupied spaces and mechanical equipment rooms.

C. Exposed, Exterior Installations: Exposed to view outdoors or subject to outdoor ambient temperatures and weather conditions. Examples include rooftop locations.

D. Concealed, Interior Installations: Concealed from view and protected from physical contact by building occupants. Examples include above ceilings and in duct shafts.

E. Concealed, Exterior Installations: Concealed from view and protected from weather conditions and physical contact by building occupants but subject to outdoor ambient temperatures. Examples include installations within unheated shelters.

F. The following are industry abbreviations for plastic materials:

1. ABS: Acrylonitrile-butadiene-styrene plastic.
2. CPVC: Chlorinated polyvinyl chloride plastic.
3. PE: Polyethylene plastic.
4. PVC: Polyvinyl chloride plastic.

G. The following are industry abbreviations for rubber materials:

1. EPDM: Ethylene-propylene-diene terpolymer rubber.
2. NBR: Acrylonitrile-butadiene rubber.

1.4 SUBMITTALS

A. Product Data: For the following:

1. Dielectric fittings.
2. Mechanical sleeve seals.

B. Welding certificates.

1.5 QUALITY ASSURANCE

A. Steel Support Welding: Qualify processes and operators according to AWS D1.1, "Structural Welding Code--Steel."

B. Steel Pipe Welding: Qualify processes and operators according to ASME Boiler and Pressure Vessel Code: Section IX, "Welding and Brazing Qualifications."

1. Comply with provisions in ASME B31 Series, "Code for Pressure Piping."
2. Certify that each welder has passed AWS qualification tests for welding processes involved and that certification is current.

C. Electrical Characteristics for Mechanical Equipment: Equipment of higher electrical characteristics may be furnished provided such proposed equipment is approved in writing and connecting electrical services, circuit breakers, and conduit sizes are appropriately modified. If minimum energy ratings or efficiencies are specified, equipment shall comply with requirements.

1.6 DELIVERY, STORAGE, AND HANDLING

A. Deliver pipes and tubes with factory-applied end caps. Maintain end caps through shipping, storage, and handling to prevent pipe end damage and to prevent entrance of dirt, debris, and moisture.

B. Store plastic pipes protected from direct sunlight. Support to prevent sagging and bending.

1.7 COORDINATION

A. Arrange for pipe spaces, chases, slots, and openings in building structure during progress of construction, to allow for mechanical installations.

B. Coordinate installation of required supporting devices and set sleeves in poured-in-place concrete and other structural components as they are constructed.

C. Coordinate requirements for access panels and doors for mechanical items requiring access that are concealed behind finished surfaces. Access panels and doors are specified in Division 8 Section "Access Doors and Frames."

PART 2 - PRODUCTS

2.1 MANUFACTURERS

A. In other Part 2 articles where subparagraph titles below introduce lists, the following requirements apply for product selection:

1. Manufacturers: Subject to compliance with requirements, provide products by the manufacturers specified.

2.2 PIPE, TUBE, AND FITTINGS

A. Refer to individual Division 15 piping Sections for pipe, tube, and fitting materials and joining methods.

B. Pipe Threads: ASME B1.20.1 for factory-threaded pipe and pipe fittings.

2.3 JOINING MATERIALS

A. Refer to individual Division 15 piping Sections for special joining materials not listed below.

B. Pipe-Flange Gasket Materials: Suitable for chemical and thermal conditions of piping system contents.

1. ASME B16.21, nonmetallic, flat, asbestos-free, 1/8-inch maximum thickness unless thickness or specific material is indicated.

   a. Full-Face Type: For flat-face, Class 125, cast-iron and cast-bronze flanges.
   b. Narrow-Face Type: For raised-face, Class 250, cast-iron and steel flanges.

2. AWWA C110, rubber, flat face, 1/8 inch thick, unless otherwise indicated; and full-face or ring type, unless otherwise indicated.

C. Flange Bolts and Nuts: ASME B18.2.1, carbon steel, unless otherwise indicated.

D. Plastic, Pipe-Flange Gasket, Bolts, and Nuts: Type and material recommended by piping system manufacturer, unless otherwise indicated.

E. Solder Filler Metals: ASTM B 32, lead-free alloys. Include water-flushable flux according to ASTM B 813.

F. Brazing Filler Metals: AWS A5.8, BCuP Series, copper-phosphorus alloys for general-duty brazing, unless otherwise indicated; and AWS A5.8, BAg1, silver alloy for refrigerant piping, unless otherwise indicated.

G. Welding Filler Metals: Comply with AWS D10.12 for welding materials appropriate for wall thickness and chemical analysis of steel pipe being welded.

H. Solvent Cements for Joining Plastic Piping:

1. PVC Piping: ASTM D 2564. Include primer according to ASTM F 656.

2.4 TRANSITION FITTINGS

A. AWWA Transition Couplings: Same size as, and with pressure rating at least equal to and with ends compatible with, piping to be joined.

1. Underground Piping NPS 1-1/2 and Smaller: Manufactured fitting or coupling.
2. Underground Piping NPS 2 and Larger: AWWA C219, metal sleeve-type coupling.
3. Aboveground Pressure Piping: Pipe fitting.

B. Plastic-to-Metal Transition Fittings: PVC one-piece fitting with manufacturer's Schedule 80 equivalent dimensions; one end with threaded brass insert, and one solvent-cement-joint end.

C. Plastic-to-Metal Transition Adaptors: One-piece fitting with manufacturer's SDR 11 equivalent dimensions; one end with threaded brass insert, and one solvent-cement-joint end.

D. Plastic-to-Metal Transition Unions: MSS SP-107, PVC four-part union. Include brass end, solvent-cement-joint end, rubber O-ring, and union nut.

E. Flexible Transition Couplings for Underground Nonpressure Drainage Piping: ASTM C 1173 with elastomeric sleeve, ends same size as piping to be joined, and corrosion-resistant metal band on each end.

2.5 DIELECTRIC FITTINGS

A. Description: Combination fitting of copper alloy and ferrous materials with threaded, solder-joint, plain, or weld-neck end connections that match piping system materials.

B. Insulating Material: Suitable for system fluid, pressure, and temperature.

C. Dielectric-Flange Kits: Companion-flange assembly for field assembly. Include flanges, full-face- or ring-type neoprene or phenolic gasket, phenolic or polyethylene bolt sleeves, phenolic washers, and steel backing washers.

1. Manufacturers:

a. Advance Products & Systems, Inc.
b. Calpico, Inc.
c. Central Plastics Company.
d. Pipeline Seal and Insulator, Inc.

2. Separate companion flanges and steel bolts and nuts shall have 150- or 300-psig minimum working pressure where required to suit system pressures.

D. Dielectric Nipples: Electroplated steel nipple with inert and noncorrosive, thermoplastic lining; plain, threaded, or grooved ends; and 300-psig minimum working pressure at 225 deg F.

1. Manufacturers:

a. Perfection Corp.
b. Precision Plumbing Products, Inc.
c. Sioux Chief Manufacturing Co., Inc.
d. Victaulic Co. of America.

2.6 MECHANICAL SLEEVE SEALS

A. Description: Modular sealing element unit, designed for field assembly, to fill annular space between pipe and sleeve.

1. Manufacturers:

a. Advance Products & Systems, Inc.
b. Calpico, Inc.
c. Metraflex Co.
d. Pipeline Seal and Insulator, Inc.

2. Sealing Elements: EPDM interlocking links shaped to fit surface of pipe. Include type and number required for pipe material and size of pipe.
3. Pressure Plates: Carbon steel or Stainless steel. Include two for each sealing element.
4. Connecting Bolts and Nuts: Carbon steel with corrosion-resistant coating or Stainless steel of length required to secure pressure plates to sealing elements. Include one for each sealing element.

2.7 SLEEVES

A. Galvanized-Steel Sheet: 0.0239-inch minimum thickness; round tube closed with welded longitudinal joint.

B. Steel Pipe: ASTM A 53, Type E, Grade B, Schedule 40, galvanized, plain ends.

C. Cast Iron: Cast or fabricated "wall pipe" equivalent to ductile-iron pressure pipe, with plain ends and integral waterstop, unless otherwise indicated.

D. Stack Sleeve Fittings: Manufactured, cast-iron sleeve with integral clamping flange. Include clamping ring and bolts and nuts for membrane flashing.

1. Underdeck Clamp: Clamping ring with set screws.

2.8 ESCUTCHEONS

A. Description: Manufactured wall and ceiling escutcheons and floor plates, with an ID to closely fit around pipe, tube, and insulation of insulated piping and an OD that completely covers opening.

B. One-Piece, Deep-Pattern Type: Deep-drawn, box-shaped brass with polished chrome-plated finish.

C. One-Piece, Cast-Brass Type: With set screw.

1. Finish: Polished chrome-plated.

D. Split-Casting, Cast-Brass Type: With concealed hinge and set screw.

1. Finish: Polished chrome-plated.

E. One-Piece, Stamped-Steel Type: With spring clips and chrome-plated finish.

F. One-Piece, Floor-Plate Type: Cast-iron floor plate.

2.9 GROUT

A. Description: ASTM C 1107, Grade B, nonshrink and nonmetallic, dry hydraulic-cement grout.

1. Characteristics: Post-hardening, volume-adjusting, nonstaining, noncorrosive, nongaseous, and recommended for interior and exterior applications.
2. Design Mix: 5000-psi, 28-day compressive strength.
3. Packaging: Premixed and factory packaged.

PART 3 - EXECUTION

3.1 MECHANICAL DEMOLITION

A. Refer to Division 1 Sections "Cutting and Patching" and "Selective Demolition" for general demolition requirements and procedures.

B. Disconnect, demolish, and remove mechanical systems, equipment, and components indicated to be removed.

1. Piping to Be Removed: Remove portion of piping indicated to be removed and cap or plug remaining piping with same or compatible piping material.
2. Ducts to Be Removed: Remove portion of ducts indicated to be removed and plug remaining ducts with same or compatible ductwork material.
3. Equipment to Be Removed and Reinstalled: Disconnect and cap services and remove, clean, and store equipment; when appropriate, reinstall, reconnect, and make equipment operational.
4. Equipment to Be Removed and Salvaged: Disconnect and cap services and remove equipment and deliver to Owner.

C. If pipe, insulation, or equipment to remain is damaged in appearance or is unserviceable, remove damaged or unserviceable portions and replace with new products of equal capacity and quality.

3.2 PIPING SYSTEMS - COMMON REQUIREMENTS

A. Install piping according to the following requirements and Division 15 Sections specifying piping systems.

B. Drawing plans, schematics, and diagrams indicate general location and arrangement of piping systems. Indicated locations and arrangements were used to size pipe and calculate friction loss, expansion, pump sizing, and other design considerations. Install piping as indicated unless deviations to layout are approved on Coordination Drawings.

C. Install piping in concealed locations, unless otherwise indicated and except in equipment rooms and service areas.

D. Install piping indicated to be exposed and piping in equipment rooms and service areas at right angles or parallel to building walls. Diagonal runs are prohibited unless specifically indicated otherwise.

E. Install piping above accessible ceilings to allow sufficient space for ceiling panel removal.

F. Install piping to permit valve servicing.

G. Install piping at indicated slopes.

H. Install piping free of sags and bends.

I. Install fittings for changes in direction and branch connections.

J. Install piping to allow application of insulation.

K. Select system components with pressure rating equal to or greater than system operating pressure.

L. Install escutcheons for penetrations of walls, ceilings, and floors according to the following:

1. New Piping:

a. Piping with Fitting or Sleeve Protruding from Wall: One-piece, deep-pattern type.

b. Chrome-Plated Piping: One-piece, cast-brass type with polished chrome-plated finish.
c. Insulated Piping: One-piece, stamped-steel type with spring clips.
d. Bare Piping at Wall and Floor Penetrations in Finished Spaces: One-piece, cast-brass type with polished chrome-plated finish.
e. Bare Piping at Wall and Floor Penetrations in Finished Spaces: One-piece, stamped-steel type.
f. Bare Piping at Ceiling Penetrations in Finished Spaces: One-piece or split-casting, cast-brass type with polished chrome-plated finish.
g. Bare Piping in Equipment Rooms: One-piece, cast-brass type.
h. Bare Piping at Floor Penetrations in Equipment Rooms: One-piece, floor-plate type.

2. Existing Piping: Use the following:

a. Chrome-Plated Piping: Split-casting, cast-brass type with chrome-plated finish.
b. Insulated Piping: Split-plate, stamped-steel type with concealed hinge and spring clips.
c. Bare Piping in Unfinished Service Spaces: Split-casting, cast-brass type with polished chrome-plated finish.
d. Bare Piping in Equipment Rooms: Split-casting, cast-brass type.

M. Sleeves are not required for core-drilled holes.

N. Permanent sleeves are not required for holes formed by removable PE sleeves.

O. Install sleeves for pipes passing through concrete and masonry walls, gypsum-board partitions, and concrete floor and roof slabs.

1. Cut sleeves to length for mounting flush with both surfaces.

a. Exception: Extend sleeves installed in floors of mechanical equipment areas or other wet areas 2 inches above finished floor level. Extend cast-iron sleeve fittings below floor slab as required to secure clamping ring if ring is specified.

2. Install sleeves in new walls and slabs as new walls and slabs are constructed.
3. Install sleeves that are large enough to provide 1/4-inch annular clear space between sleeve and pipe or pipe insulation. Use the following sleeve materials:

a. Steel Pipe Sleeves: For pipes smaller than NPS 6.
b. Stack Sleeve Fittings: For pipes penetrating floors with membrane waterproofing. Secure flashing between clamping flanges. Install section of cast-iron soil pipe to extend sleeve to 2 inches above finished floor level. Refer to Division 7 Section "Sheet Metal Flashing and Trim" for flashing.

1) Seal space outside of sleeve fittings with grout.

4. Except for underground wall penetrations, seal annular space between sleeve and pipe or pipe insulation, using joint sealants appropriate for size, depth, and location of joint. Refer to Division 7 Section "Joint Sealants" for materials and installation.

P. Aboveground, Exterior-Wall Pipe Penetrations: Seal penetrations using sleeves and mechanical sleeve seals. Select sleeve size to allow for 1-inch annular clear space between pipe and sleeve for installing mechanical sleeve seals.

1. Install steel pipe for sleeves smaller than 6 inches in diameter.
2. Install cast-iron "wall pipes" for sleeves 6 inches and larger in diameter.
3. Mechanical Sleeve Seal Installation: Select type and number of sealing elements required for pipe material and size. Position pipe in center of sleeve. Assemble mechanical sleeve seals and install in annular space between pipe and sleeve. Tighten bolts against pressure plates that cause sealing elements to expand and make watertight seal.

Q. Underground, Exterior-Wall Pipe Penetrations: Install cast-iron "wall pipes" for sleeves. Seal pipe penetrations using mechanical sleeve seals. Select sleeve size to allow for 1-inch annular clear space between pipe and sleeve for installing mechanical sleeve seals.

1. Mechanical Sleeve Seal Installation: Select type and number of sealing elements required for pipe material and size. Position pipe in center of sleeve. Assemble mechanical sleeve seals and install in annular space between pipe and sleeve. Tighten bolts against pressure plates that cause sealing elements to expand and make watertight seal.

R. Fire-Barrier Penetrations: Maintain indicated fire rating of walls, partitions, ceilings, and floors at pipe penetrations. Seal pipe penetrations with firestop materials. Refer to Division 7 Section "Through-Penetration Firestop Systems" for materials.

S. Verify final equipment locations for roughing-in.

T. Refer to equipment specifications in other Sections of these Specifications for roughing-in requirements.

3.3 PIPING JOINT CONSTRUCTION

A. Join pipe and fittings according to the following requirements and Division 15 Sections specifying piping systems.

B. Ream ends of pipes and tubes and remove burrs. Bevel plain ends of steel pipe.

C. Remove scale, slag, dirt, and debris from inside and outside of pipe and fittings before assembly.

D. Soldered Joints: Apply ASTM B 813, water-flushable flux, unless otherwise indicated, to tube end. Construct joints according to ASTM B 828 or CDA's "Copper Tube Handbook," using lead-free solder alloy complying with ASTM B 32.

E. Brazed Joints: Construct joints according to AWS's "Brazing Handbook," "Pipe and Tube" Chapter, using copper-phosphorus brazing filler metal complying with AWS A5.8.

F. Threaded Joints: Thread pipe with tapered pipe threads according to ASME B1.20.1. Cut threads full and clean using sharp dies. Ream threaded pipe ends to remove burrs and restore full ID. Join pipe fittings and valves as follows:

1. Apply appropriate tape or thread compound to external pipe threads unless dry seal threading is specified.
2. Damaged Threads: Do not use pipe or pipe fittings with threads that are corroded or damaged. Do not use pipe sections that have cracked or open welds.

G. Welded Joints: Construct joints according to AWS D10.12, using qualified processes and welding operators according to Part 1 "Quality Assurance" Article.

H. Flanged Joints: Select appropriate gasket material, size, type, and thickness for service application. Install gasket concentrically positioned. Use suitable lubricants on bolt threads.

I. Plastic Piping Solvent-Cement Joints: Clean and dry joining surfaces. Join pipe and fittings according to the following:

1. Comply with ASTM F 402 for safe-handling practice of cleaners, primers, and solvent cements.
2. PVC Nonpressure Piping: Join according to ASTM D 2855.

3.4 PIPING CONNECTIONS

A. Make connections according to the following, unless otherwise indicated:

1. Install unions, in piping NPS 2 and smaller, adjacent to each valve and at final connection to each piece of equipment.
2. Install flanges, in piping NPS 2-1/2 and larger, adjacent to flanged valves and at final connection to each piece of equipment.
3. Dry Piping Systems: Install dielectric unions and flanges to connect piping materials of dissimilar metals.
4. Wet Piping Systems: Install dielectric coupling and nipple fittings to connect piping materials of dissimilar metals.

3.5 EQUIPMENT INSTALLATION - COMMON REQUIREMENTS

A. Install equipment to allow maximum possible headroom unless specific mounting heights are not indicated.

B. Install equipment level and plumb, parallel and perpendicular to other building systems and components in exposed interior spaces, unless otherwise indicated.

C. Install mechanical equipment to facilitate service, maintenance, and repair or replacement of components. Connect equipment for ease of disconnecting, with minimum interference to other installations. Extend grease fittings to accessible locations.

D. Install equipment to allow right of way for piping installed at required slope.

3.6 PAINTING

A. Painting of mechanical systems, equipment, and components is specified in Division 9 Section "Painting."

B. Damage and Touchup: Repair marred and damaged factory-painted finishes with materials and procedures to match original factory finish.

3.7 CONCRETE BASES

A. Concrete Bases: Anchor equipment to concrete base according to equipment manufacturer's written instructions and according to seismic codes at Project.

1. Construct concrete bases of dimensions indicated, but not less than 4 inches larger in both directions than supported unit.
2. Install dowel rods to connect concrete base to concrete floor. Unless otherwise indicated, install dowel rods on 18-inch centers around the full perimeter of the base.
3. Install epoxy-coated anchor bolts for supported equipment that extend through concrete base, and anchor into structural concrete floor.
4. Place and secure anchorage devices. Use supported equipment manufacturer's setting drawings, templates, diagrams, instructions, and directions furnished with items to be embedded.
5. Install anchor bolts to elevations required for proper attachment to supported equipment.
6. Install anchor bolts according to anchor-bolt manufacturer's written instructions.
7. Use 3000-psi, 28-day compressive-strength concrete and reinforcement as specified in Division 3 Section "Cast-in-Place Concrete."

3.8 ERECTION OF METAL SUPPORTS AND ANCHORAGES

A. Refer to Division 5 Section "Metal Fabrications" for structural steel.

B. Cut, fit, and place miscellaneous metal supports accurately in location, alignment, and elevation to support and anchor mechanical materials and equipment.

C. Field Welding: Comply with AWS D1.1.

3.9 GROUTING

A. Mix and install grout for mechanical equipment base bearing surfaces, pump and other equipment base plates, and anchors.

B. Clean surfaces that will come into contact with grout.

C. Provide forms as required for placement of grout.

D. Avoid air entrapment during placement of grout.

E. Place grout, completely filling equipment bases.

F. Place grout on concrete bases and provide smooth bearing surface for equipment.

G. Place grout around anchors.

H. Cure placed grout.

END OF SECTION 15050

SECTION 15055
MOTORS

PART 1 - GENERAL

1.1 RELATED DOCUMENTS

A. Drawings and general provisions of the Contract, including General and Supplementary Conditions and Division 1 Specification Sections, apply to this Section.

1.2 SUMMARY

A. This Section includes basic requirements for factory- and field-installed motors.

1.3 DEFINITIONS

A. Factory-Installed Motor: A motor installed by motorized-equipment manufacturer as a component of equipment.

B. Field-Installed Motor: A motor installed at Project site and not factory installed as an integral component of motorized equipment.

1.4 SUBMITTALS

A. Product Data for Field-Installed Motors: For each type and size of motor, provide nameplate data and ratings; shipping, installed, and operating weights; enclosure type and mounting arrangements; size, type, and location of winding terminations; conduit entry and ground lug locations; and information on coatings or finishes.

B. Operation and Maintenance Data: For field-installed motors to include in emergency, operation, and maintenance manuals.

1.5 QUALITY ASSURANCE

A. Electrical Components, Devices, and Accessories: Listed and labeled as defined in NFPA 70, Article 100, by a testing agency acceptable to authorities having jurisdiction, and marked for intended use.

B. Comply with NFPA 70.

C. Manufacturer's Qualifications: Firms regularly engaged in manufacture of variable frequency drives with characteristic, sizes and capacities required whose products have been in satisfactory use in similar service for not less than 5 years.

D. UL and NEMA Compliance: Provide electric cabinets and components which are listed and labeled by Underwriters Laboratories and mounted in a NEMA1 enclosure for variable frequency drives.

1.6 COORDINATION

A. Coordinate features of motors, installed units, and accessory devices and features that comply with the following:

1. Compatible with the following:

a. Magnetic controllers.
b. Multispeed controllers.
c. Reduced-voltage controllers.

2. Designed and labeled for use with variable frequency controllers, and suitable for use throughout speed range without overheating.
3. Matched to torque and horsepower requirements of the load.
4. Matched to ratings and characteristics of supply circuit and required control sequence.

B. Coordinate motor support with requirements for driven load; access for maintenance and motor replacement; installation of accessories, belts, belt guards; and adjustment of sliding rails for belt tensioning.

C. Coordinate size and location of concrete bases. Cast anchor-bolt inserts into bases. Concrete, reinforcement, and formwork requirements are specified in Division 3.

1.7 PRODUCT DELIVERY, STORAGE AND BUILDING

A. Store Panels and Components in clean dry place. Protect from weather, dirt, fumes, water, construction debris and physical damage.

PART 2 - PRODUCTS

2.1 MANUFACTURERS

A. Manufacturers: Subject to compliance with requirements, provide products by one of the following:

1. Variable Frequency Drives

a. ABB Drives, Inc. 500 Series.
b. Graham Co. 2001 Series
c. Reliance Electric VTAC-V.

2.2 MOTOR REQUIREMENTS

A. Motor requirements apply to factory- and field-installed motors except as follows:

1. Different ratings, performance, or characteristics for motor are specified in another Section.
2. Motorized-equipment manufacturer requires ratings, performance, or characteristics, other than those specified in this Section, to meet performance specified.

2.3 MOTOR REQUIREMENTS

A. Motor requirements apply to factory- and field-installed motors except as follows:

1. Different ratings, performance, or characteristics for motor are specified in another Section.
2. Motorized-equipment manufacturer requires ratings, performance, or characteristics, other than those specified in this Section, to meet performance specified.

2.4 MOTOR CHARACTERISTICS

A. Motors 1/2 HP and Larger: Three phase.

B. Motors Smaller Than 1/2 HP: Single phase.

C. Frequency Rating: 60 Hz.

D. Voltage Rating: NEMA standard voltage selected to operate on nominal circuit voltage to which motor is connected.

E. Service Factor: 1.15 for open dripproof motors; 1.0 for totally enclosed motors.

F. Duty: Continuous duty at ambient temperature of 105 deg F and at altitude of 3300 feet above sea level.

G. Capacity and Torque Characteristics: Sufficient to start, accelerate, and operate connected loads at designated speeds, at installed altitude and environment, with indicated operating sequence, and without exceeding nameplate ratings or considering service factor.

H. Enclosure: Open dripproof.

2.5 POLYPHASE MOTORS

A. Description: NEMA MG 1, Design B, medium induction motor.

B. Efficiency: Premium, as defined in NEMA MG 1.

C. Stator: Copper windings, unless otherwise indicated.

1. Multispeed motors shall have separate winding for each speed.

D. Rotor: Squirrel cage, unless otherwise indicated.

E. Bearings: Double-shielded, prelubricated ball bearings suitable for radial and thrust loading.

F. Temperature Rise: Match insulation rating, unless otherwise indicated.

G. Insulation: Class F, unless otherwise indicated.

H. Code Letter Designation:

1. Motors 15 HP and Larger: NEMA starting Code F or Code G.
2. Motors Smaller Than 15 HP: Manufacturer's standard starting characteristic.

I. Enclosure: Cast iron for motors 7.5 hp and larger; rolled steel for motors smaller than 7.5 hp.

1. Finish: Gray enamel.

2.6 POLYPHASE MOTORS WITH ADDITIONAL REQUIREMENTS

A. Motors Used with Reduced-Inrush Controllers: Match wiring connection requirements for controller with required motor leads. Provide terminals in motor terminal box, suited to control method.

B. Motors Used with Variable Frequency Controllers: Ratings, characteristics, and features coordinated with and approved by controller manufacturer.

1. Designed with critical vibration frequencies outside operating range of controller output.
2. Temperature Rise: Matched to rating for Class B insulation.
3. Insulation: Class H.
4. Thermal Protection: Comply with NEMA MG 1 requirements for thermally protected motors.

C. Rugged-Duty Motors: Totally enclosed, with 1.25 minimum service factor, greased bearings, integral condensate drains, and capped relief vents. Windings insulated with non-hygroscopic material.

1. Finish: Chemical-resistant paint over corrosion-resistant primer.

D. Source Quality Control for Field-Installed Motors: Perform the following tests on each motor according to NEMA MG 1:

1. Measure winding resistance.
2. Read no-load current and speed at rated voltage and frequency.
3. Measure locked rotor current at rated frequency.
4. Perform high-potential test.

2.7 SINGLE-PHASE MOTORS

A. Type: One of the following, to suit starting torque and requirements of specific motor application:

1. Permanent-split capacitor.
2. Split-phase start, capacitor run.
3. Capacitor start, capacitor run.

B. Shaded-Pole Motors: For motors 1/20 hp and smaller only.

C. Thermal Protection: Internal protection to automatically open power supply circuit to motor when winding temperature exceeds a safe value calibrated to temperature rating of motor insulation. Thermal-protection device shall automatically reset when motor temperature returns to normal range.

D. Bearings: Ball type for belt-connected motors and other motors with high radial forces on motor shaft; sealed, prelubricated-sleeve type for other single-phase motors.

E. Source Quality Control for Field-Installed Motors: Perform the following tests on each motor according to NEMA MG 1:

1. Measure winding resistance.
2. Read no-load current and speed at rated voltage and frequency.
3. Measure locked rotor current at rated frequency.
4. Perform high-potential test.

2.8 VARIABLE FREQUENCY DRIVES, GENERAL

A. The Standard Variable Frequency Controller (VFC) and all of the optional modifications shall mount with a common NEMA 1 Enclosure.

B. Description:

1. The Variable Frequency Controller (VFC) shall be a fully digital PWM using very large scale integration techniques as well as surface mount technology for increased reliability. The VFC shall use a 16 bit microprocessor with a 12 bit resolution to allow stepless motor control from 0.1% to 110% of motor base speed.
2. All programmable settings shall be held in a non-volatile memory and shall not be affected by power outages, brownouts, power drips, etc. The VFC shall have initial programmable settings intact from the factory without the need of battery backup, etc. The VFC shall not need to be programmed at the job site prior to being able to run a motor, but shall be ready to run a motor as soon as power connections are made.
3. Programmable at the job site to accommodate specific load application requirements, such as frequency avoidance and preset speeds shall be available to the user.
4. Complete efficiency versus load and speed for all VFC ratings shall be readily available from the manufacturer. VFC shall be capable of multiple motor operation at the same frequency and speed.
5. All high voltage components within the enclosure shall be isolated with steel or polycarbonate covers.

C. Basic Features:

1. Operator controls shall be mounted on the door of the cabinet and consist of a membrane command center which allows manual stop/start and speed control, local/remote

indication and manual/or automatic speed control selection. In addition, the command center will serve as a means to configure controller parameters such a minimum speed, maximum speed acceleration and deceleration times, volts/Hz ration, torque boost, etc. Potentionmeters will not be allowed for these settings.

2. The controller will be able to follow an external speed signal and respond to remote start/stop contacts wired to the terminal strip while in the automatic/remote mode.
3. The main input disconnect shall provide a positive disconnect between the controller and all phases of the incoming A-C line. This disconnect shall be mounted inside the controller enclosure and have through the door interlocking toggle with provisions for padlocking.
4. The controller shall contain an electronic overload circuit designed to protect two A-C motors, operated on the Variable Frequency Controller.
5. Frequency Controller output from extended overload operation on an inverse time basis. A motor thermostat back up may also be provided.
6. Automatic restarts will be attempted three times after a power outage, drive faultor external fault, if the drives in automatic mode. The circuit shall allow the user to select 0, 1, 2, or 3 restart attempts. The reset time between fault occurrences shall also be selectable. All settings shall be via the membrane command center.
7. An LED display will be mounted on the door of the cabinet and will digitally indicate:
   a. Frequency output.
   b. Voltage output.
   c. Current output.
   d. First fault indication.
8. The Adjustable Frequency Controller shall be capable of starting into a rotating load without the need of a time delay upon a start command.
9. Relay contacts for remote indication of drive fault and motor running shall be provided for interwiring to other devices.
10. There shall be three critical frequency avoidance bands which can be programmed in the field via the membrane command center to enable the controller to avoid certain frequencies which the pump or fan system may resonate at due to reduced speed operation. Each critical frequency avoidance band shall have a band width adjustable via keypad entry of up to 10 Hz.
11. There shall be three programmable preset speeds which will force the AFC to preset speed upon the user contact closure. This feature shall be set digitally by entering via the door mounted membrane command center.
12. The AFC shall have the capability to ride through power dips up to 400 msec without a controller trip depending on load and operating condition.
13. Isolated electrical follower shall enable the Adjustable Frequency Controller to follow a 0-20ma, 4-20ma, or 0-4, 0-8, 0-10, volt D-C grounded or ungrounded signal.
14. Line inductance in the form of line reactors or isolation transformers shall be provided regardless of the KVA connected to the line. Backfeed of total harmonic distortion into the electrical system shall not exceed 5%. This is to minimize line surges, line notching, and voltage distortions from causing nuisance trips and type Variable Frequency Controller.

D. Protective Circuits and Features:

1. The AFC shall include the following protective circuits and features:

   a. DV-DT and DI/DT protection for semiconductors.
   b. Instantaneous Electronic Trip for the following faults.

c. Motor current exceeds 110% for longer than one minute of controller maximum site since wave current rating.
d. Output phase to phase short circuit condition.
e. Total ground fault under any operating condition.
f. High input line voltage.
g. Low input line voltage.
h. Loss of input phase.
i. External fault. (This protective circuit shall permit, by means of the terminal strip, wiring of remote N.C. safety contact such as high static, firestat, etc. to shut down the drive).

2. All live power equipment shall be converted by protective shields to ensure the safety of operating personnel.
3. Metal oxide varistors.

E. Adjustments:

1. The following adjustments shall be provided:
   a. Maximum frequency (15 to 400 Hz) with factory setting at 60 Hz.
   b. Minimum frequency (5 to 60 Hz) with factory setting at 6 Hz.
   c. Acceleration (0.1 to 360 seconds) factory set at 20 seconds.
   d. Deceleration (0.1 to 360 seconds) factory set at 20 seconds.
   e. Volts/Hertz ratio factory set for 460 volts at 60 Hz.
   f. Voltage offset or boost with factory setting at 100% torque.
   g. Current limit (50 to 100%) sine wave current rating factory set at 100%.

F. Service Conditions:

1. The VFC shall be designed and constructed to operate within the following service conditions:
   a. Suitable for continuous operation at an ambient temperature of 32 deg. F. to 104 deg. F. Elevation up to 1100 ft. altitude with a relative humidity to 95% non-condensing.
   b. A-C line variation of –10% to +10% voltage and +/- 2% frequency.

G. Modifications:

1. The following options shall be included as specified in the cover document.
2. Bypass circuitry to transfer the motor from the Variable Frequency Controller to the utility supplied input power or from the line to the controller while the motor is at any speed. Two motor contactors, electrically interlocked shall be utilized. One contactor is to be between the controller output and the motor, controlled by the controller regulator; and the other one is to be between the bypass power line and the motor, providing across-the-line starting. Motor protection per National Electrical Code shall be provided in both the "controller" mode and the "bypass" mode by a motor overload relay. The 115 volt A-C relay control logic, allowing common start/stop commands in the "Controller" mode and the "bypass" mode shall also be included within the enclosure which is UL listed as a single unit.
3. The bypass shall include a door interlocked, main power input disconnect or circuit breaker option providing positive shutdown of all power to both the bypass circuitry and the Adjustable Frequency Controller. A separate motor starter shall not be needed for

safe operation. The bypass circuit shall also include a second input disconnect installed in the Adjustable Frequency Controller. This disconnect shall provide a bypass mode. The bypass shall mount within the controller enclosure and be accessible only upon opening the controller door. The bypass shall include terminal connectors for over pressurization switches to protect the duct work in the bypass mode.

PART 3 - EXECUTION

3.1 EXAMINATION

A. Examine areas to receive field-installed motors for compliance with requirements, installation tolerances and other conditions affecting performance.

B. Examine roughing-in for conduit systems to verify actual locations of conduit connections before motor installation.

C. Proceed with installation only after unsatisfactory conditions have been corrected.

3.2 INSTALLATION

A. General: Install panel where indicated, in accordance with manufacturer's published installation instructions, complying with recognized industry practices to ensure that control panels comply with requirements and serve intended purposes.

B. Access: Provide access space around V-F panel for service as indicated, but in no case less than that recommended by manufacturer.

C. Electrical Wiring: Install electrical devices furnished by manufacturer but not specified to be factory mounted. Furnish copy of manufacturer's wiring diagram submittal to Electrical Installer.

D. Verify that electrical wiring installation is in accordance with manufacturer's submittal and installation requirements of Division 16 sections. Do not proceed with equipment start up until wiring installation is acceptable to equipment installer.

3.3 DEMONSTRATION

A. Engage a factory-authorized service representative to train Owner's maintenance personnel to adjust, operate, and maintain field-installed motors. Refer to Division 1 Section "Closeout Procedures."

END OF SECTION 15055

SECTION 15060
HANGERS AND SUPPORTS

PART 1 - GENERAL

1.1 RELATED DOCUMENTS

A. Drawings and general provisions of the Contract, including General and Supplementary Conditions and Division 1 Specification Sections, apply to this Section.

1.2 SUMMARY

A. This Section includes the following hangers and supports for mechanical system piping and equipment:

1. Steel pipe hangers and supports.
2. Trapeze pipe hangers.
3. Thermal-hanger shield inserts.

B. Related Sections include the following:

1. Division 5 Section "Metal Fabrications" for structural-steel shapes and plates for trapeze hangers for pipe and equipment supports.
2. Division 15 Section "Pipe Expansion Fittings and Loops" for pipe guides and anchors.
3. Division 15 Section "Metal Ducts" for duct hangers and supports.

1.3 DEFINITIONS

A. MSS: Manufacturers Standardization Society for The Valve and Fittings Industry Inc.

B. Terminology: As defined in MSS SP-90, "Guidelines on Terminology for Pipe Hangers and Supports."

1.4 PERFORMANCE REQUIREMENTS

A. Design supports for multiple pipes, including pipe stands, capable of supporting combined weight of supported systems, system contents, and test water.

B. Design equipment supports capable of supporting combined operating weight of supported equipment and connected systems and components.

1.5 QUALITY ASSURANCE

A. Welding: Qualify procedures and personnel according to ASME Boiler and Pressure Vessel Code: Section IX.

PART 2 - PRODUCTS

2.1 MANUFACTURERS

A. In other Part 2 articles where titles below introduce lists, the following requirements apply to product selection:

1. Manufacturers: Subject to compliance with requirements, provide products by one of the manufacturers specified.

2.2 STEEL PIPE HANGERS AND SUPPORTS

A. Description: MSS SP-58, Types 1 through 58, factory-fabricated components. Refer to Part 3 "Hanger and Support Applications" Article for where to use specific hanger and support types.

B. Manufacturers:

1. AAA Technology & Specialties Co., Inc.
2. B-Line Systems, Inc.; a division of Cooper Industries.
3. Carpenter & Paterson, Inc.
4. Empire Industries, Inc.
5. Globe Pipe Hanger Products, Inc.
6. Grinnell Corp.
7. GS Metals Corp.
8. National Pipe Hanger Corporation.
9. PHD Manufacturing, Inc.
10. PHS Industries, Inc.
11. Piping Technology & Products, Inc.

C. Galvanized, Metallic Coatings: Pregalvanized or hot dipped.

D. Padded Hangers: Hanger with fiberglass or other pipe insulation pad or cushion for support of bearing surface of piping.

2.3 TRAPEZE PIPE HANGERS

A. Description: MSS SP-69, Type 59, shop- or field-fabricated pipe-support assembly made from structural-steel shapes with MSS SP-58 hanger rods, nuts, saddles, and U-bolts.

2.4 THERMAL-HANGER SHIELD INSERTS

A. Description: 100-psig- minimum, compressive-strength insulation insert encased in sheet metal shield.

B. Manufacturers:

1. Carpenter & Paterson, Inc.
2. PHS Industries, Inc.
3. Pipe Shields, Inc.
4. Value Engineered Products, Inc.

C. Insulation-Insert Material for Cold Piping: Type I calcium silicate or ASTM C 552, Type II cellular glass with vapor barrier.

D. Insulation-Insert Material for Hot Piping: Water-repellent treated, ASTM C 533, Type I calcium silicate or ASTM C 552, Type II cellular glass.

E. For Trapeze or Clamped Systems: Insert and shield shall cover entire circumference of pipe.

F. For Clevis or Band Hangers: Insert and shield shall cover lower 180 degrees of pipe.

G. Insert Length: Extend 2 inches beyond sheet metal shield for piping operating below ambient air temperature.

2.5 FASTENER SYSTEMS

A. Powder-Actuated Fasteners: Threaded-steel stud, for use in hardened portland cement concrete with pull-out, tension, and shear capacities appropriate for supported loads and building materials where used.

1. Manufacturers:

a. Hilti, Inc.
b. ITW Ramset/Red Head.
c. Masterset Fastening Systems, Inc.
d. MKT Fastening, LLC.

2.6 MISCELLANEOUS MATERIALS

A. Structural Steel: ASTM A 36/A 36M, steel plates, shapes, and bars; black and galvanized.

B. Grout: ASTM C 1107, factory-mixed and -packaged, dry, hydraulic-cement, nonshrink and nonmetallic grout; suitable for interior and exterior applications.

1. Properties: Nonstaining, noncorrosive, and nongaseous.
2. Design Mix: 5000-psi, 28-day compressive strength.

PART 3 - EXECUTION

3.1 HANGER AND SUPPORT APPLICATIONS

A. Specific hanger and support requirements are specified in Sections specifying piping systems and equipment.

B. Comply with MSS SP-69 for pipe hanger selections and applications that are not specified in piping system Sections.

C. Use hangers and supports with galvanized, metallic coatings for piping and equipment that will not have field-applied finish.

D. Use nonmetallic coatings on attachments for electrolytic protection where attachments are in direct contact with copper tubing.

E. Use padded hangers for piping that is subject to scratching.

F. Horizontal-Piping Hangers and Supports: Unless otherwise indicated and except as specified in piping system Sections, install the following types:

1. Adjustable, Steel Clevis Hangers (MSS Type 1): For suspension of noninsulated or insulated stationary pipes, NPS 1/2 to NPS 30.
2. Carbon- or Alloy-Steel, Double-Bolt Pipe Clamps (MSS Type 3): For suspension of pipes, NPS 3/4 to NPS 24, requiring clamp flexibility and up to 4 inches of insulation.
3. Steel Pipe Clamps (MSS Type 4): For suspension of cold and hot pipes, NPS 1/2 to NPS 24, if little or no insulation is required.
4. Pipe Hangers (MSS Type 5): For suspension of pipes, NPS 1/2 to NPS 4, to allow off-center closure for hanger installation before pipe erection.
5. Adjustable, Steel Band Hangers (MSS Type 7): For suspension of noninsulated stationary pipes, NPS 1/2 to NPS 8.
6. Adjustable Band Hangers (MSS Type 9): For suspension of noninsulated stationary pipes, NPS 1/2 to NPS 8.
7. Adjustable Swivel-Ring Band Hangers (MSS Type 10): For suspension of noninsulated stationary pipes, NPS 1/2 to NPS 2.
8. U-Bolts (MSS Type 24): For support of heavy pipes, NPS 1/2 to NPS 30.
9. Clips (MSS Type 26): For support of insulated pipes not subject to expansion or contraction.
10. Single Pipe Rolls (MSS Type 41): For suspension of pipes, NPS 1 to NPS 30, from 2 rods if longitudinal movement caused by expansion and contraction might occur.
11. Complete Pipe Rolls (MSS Type 44): For support of pipes, NPS 2 to NPS 42, if longitudinal movement caused by expansion and contraction might occur but vertical adjustment is not necessary.
12. Pipe Roll and Plate Units (MSS Type 45): For support of pipes, NPS 2 to NPS 24, if small horizontal movement caused by expansion and contraction might occur and vertical adjustment is not necessary.
13. Adjustable Pipe Roll and Base Units (MSS Type 46): For support of pipes, NPS 2 to NPS 30, if vertical and lateral adjustment during installation might be required in addition to expansion and contraction.

G. Vertical-Piping Clamps: Unless otherwise indicated and except as specified in piping system Sections, install the following types:

1. Extension Pipe or Riser Clamps (MSS Type 8): For support of pipe risers, NPS 3/4 to NPS 20.
2. Carbon- or Alloy-Steel Riser Clamps (MSS Type 42): For support of pipe risers, NPS 3/4 to NPS 20, if longer ends are required for riser clamps.

H. Hanger-Rod Attachments: Unless otherwise indicated and except as specified in piping system Sections, install the following types:

1. Steel Turnbuckles (MSS Type 13): For adjustment up to 6 inches for heavy loads.
2. Steel Clevises (MSS Type 14): For 120 to 450 deg F piping installations.
3. Swivel Turnbuckles (MSS Type 15): For use with MSS Type 11, split pipe rings.
4. Malleable-Iron Sockets (MSS Type 16): For attaching hanger rods to various types of building attachments.
5. Steel Weldless Eye Nuts (MSS Type 17): For 120 to 450 deg F piping installations.

I. Building Attachments: Unless otherwise indicated and except as specified in piping system Sections, install the following types:

1. Top-Beam C-Clamps (MSS Type 19): For use under roof installations with bar-joist construction to attach to top flange of structural shape.
2. Side-Beam or Channel Clamps (MSS Type 20): For attaching to bottom flange of beams, channels, or angles.
3. Center-Beam Clamps (MSS Type 21): For attaching to center of bottom flange of beams.
4. Welded Beam Attachments (MSS Type 22): For attaching to bottom of beams if loads are considerable and rod sizes are large.
5. C-Clamps (MSS Type 23): For structural shapes.
6. Top-Beam Clamps (MSS Type 25): For top of beams if hanger rod is required tangent to flange edge.
7. Side-Beam Clamps (MSS Type 27): For bottom of steel I-beams.
8. Steel-Beam Clamps with Eye Nuts (MSS Type 28): For attaching to bottom of steel I-beams for heavy loads.
9. Linked-Steel Clamps with Eye Nuts (MSS Type 29): For attaching to bottom of steel I-beams for heavy loads, with link extensions.
10. Malleable Beam Clamps with Extension Pieces (MSS Type 30): For attaching to structural steel.
11. Welded-Steel Brackets: For support of pipes from below, or for suspending from above by using clip and rod. Use one of the following for indicated loads:

    a. Light (MSS Type 31): 750 lb.
    b. Medium (MSS Type 32): 1500 lb.
    c. Heavy (MSS Type 33): 3000 lb.

12. Side-Beam Brackets (MSS Type 34): For sides of steel or wooden beams.
13. Plate Lugs (MSS Type 57): For attaching to steel beams if flexibility at beam is required.
14. Horizontal Travelers (MSS Type 58): For supporting piping systems subject to linear horizontal movement where headroom is limited.

J. Saddles and Shields: Unless otherwise indicated and except as specified in piping system Sections, install the following types:

1. Steel Pipe-Covering Protection Saddles (MSS Type 39): To fill interior voids with insulation that matches adjoining insulation.
2. Protection Shields (MSS Type 40): Of length recommended in writing by manufacturer to prevent crushing insulation.
3. Thermal-Hanger Shield Inserts: For supporting insulated pipe.

K. Spring Hangers and Supports: Unless otherwise indicated and except as specified in piping system Sections, install the following types:

1. Restraint-Control Devices (MSS Type 47): Where indicated to control piping movement.
2. Spring Cushions (MSS Type 48): For light loads if vertical movement does not exceed 1-1/4 inches.
3. Spring-Cushion Roll Hangers (MSS Type 49): For equipping Type 41 roll hanger with springs.
4. Variable-Spring Hangers (MSS Type 51): Preset to indicated load and limit variability factor to 25 percent to absorb expansion and contraction of piping system from hanger.
5. Variable-Spring Trapeze Hangers (MSS Type 53): Preset to indicated load and limit variability factor to 25 percent to absorb expansion and contraction of piping system from trapeze support.
6. Constant Supports: For critical piping stress and if necessary to avoid transfer of stress from one support to another support, critical terminal, or connected equipment. Include auxiliary stops for erection, hydrostatic test, and load-adjustment capability. These supports include the following types:

    a. Horizontal (MSS Type 54): Mounted horizontally.
    b. Vertical (MSS Type 55): Mounted vertically.
    c. Trapeze (MSS Type 56): Two vertical-type supports and one trapeze member.

3.2 HANGER AND SUPPORT INSTALLATION

A. Steel Pipe Hanger Installation: Comply with MSS SP-69 and MSS SP-89. Install hangers, supports, clamps, and attachments as required to properly support piping from building structure.

B. Trapeze Pipe Hanger Installation: Comply with MSS SP-69 and MSS SP-89. Arrange for grouping of parallel runs of horizontal piping and support together on field-fabricated trapeze pipe hangers.

1. Pipes of Various Sizes: Support together and space trapezes for smallest pipe size or install intermediate supports for smaller diameter pipes as specified above for individual pipe hangers.
2. Field fabricate from ASTM A 36/A 36M, steel shapes selected for loads being supported. Weld steel according to AWS D1.1.

C. Thermal-Hanger Shield Installation: Install in pipe hanger or shield for insulated piping.

D. Install hangers and supports complete with necessary inserts, bolts, rods, nuts, washers, and other accessories.

E. Install lateral bracing with pipe hangers and supports to prevent swaying.

F. Install building attachments to structural steel. Install additional attachments at concentrated loads, including valves, flanges, and strainers, NPS 2-1/2 and larger and at changes in direction of piping.

G. Load Distribution: Install hangers and supports so piping live and dead loads and stresses from movement will not be transmitted to connected equipment.

H. Pipe Slopes: Install hangers and supports to provide indicated pipe slopes and so maximum pipe deflections allowed by ASME B31.1 (for power piping) and ASME B31.9 (for building services piping) are not exceeded.

I. Insulated Piping: Comply with the following:

1. Attach clamps and spacers to piping.

    a. Piping Operating above Ambient Air Temperature: Clamp may project through insulation.
    b. Piping Operating below Ambient Air Temperature: Use thermal-hanger shield insert with clamp sized to match OD of insert.
    c. Do not exceed pipe stress limits according to ASME B31.1 for power piping and ASME B31.9 for building services piping.

2. Install MSS SP-58, Type 39, protection saddles if insulation without vapor barrier is indicated. Fill interior voids with insulation that matches adjoining insulation.

    a. Option: Thermal-hanger shield inserts may be used. Include steel weight-distribution plate for pipe NPS 4 and larger if pipe is installed on rollers.

3. Install MSS SP-58, Type 40, protective shields on cold piping with vapor barrier. Shields shall span an arc of 180 degrees.

    a. Option: Thermal-hanger shield inserts may be used. Include steel weight-distribution plate for pipe NPS 4 and larger if pipe is installed on rollers.

4. Shield Dimensions for Pipe: Not less than the following:

    a. NPS 1/4 to NPS 3-1/2: 12 inches long and 0.048 inch thick.

5. Insert Material: Length at least as long as protective shield.
6. Thermal-Hanger Shields: Install with insulation same thickness as piping insulation.

3.3 METAL FABRICATIONS

A. Cut, drill, and fit miscellaneous metal fabrications for trapeze pipe hangers.

B. Fit exposed connections together to form hairline joints. Field weld connections that cannot be shop welded because of shipping size limitations.

C. Field Welding: Comply with AWS D1.1 procedures for shielded metal arc welding, appearance and quality of welds, and methods used in correcting welding work, and with the following:

1. Use materials and methods that minimize distortion and develop strength and corrosion resistance of base metals.
2. Obtain fusion without undercut or overlap.
3. Remove welding flux immediately.
4. Finish welds at exposed connections so no roughness shows after finishing and contours of welded surfaces match adjacent contours.

3.4 ADJUSTING

A. Hanger Adjustments: Adjust hangers to distribute loads equally on attachments and to achieve indicated slope of pipe.

3.5 PAINTING

A. Touch Up: Clean field welds and abraded areas of shop paint. Paint exposed areas immediately after erecting hangers and supports. Use same materials as used for shop painting. Comply with SSPC-PA 1 requirements for touching up field-painted surfaces.

1. Apply paint by brush or spray to provide minimum dry film thickness of 2.0 mils.

B. Galvanized Surfaces: Clean welds, bolted connections, and abraded areas and apply galvanizing-repair paint to comply with ASTM A 780.

END OF SECTION 15060

SECTION 15074
VIBRATION CONTROLS FOR HVAC PIPING AND EQUIPMENT

PART 1 - GENERAL

1.1 RELATED DOCUMENTS

A. Drawings and general provisions of the Contract, including General and Supplementary Conditions and Division 1 Specification Sections, apply to this Section.

1.2 SUMMARY

A. This Section includes the following:

1. Restrained spring isolators.

1.3 SUBMITTALS

A. Product Data: For the following:

1. Include rated load, rated deflection, for each vibration isolation device.
2. Interlocking Snubbers: Include ratings for horizontal, vertical, and combined loads.

PART 2 - PRODUCTS

2.1 VIBRATION ISOLATORS

A. Manufacturers: Subject to compliance with requirements, provide products by one of the following:

1. Ace Mountings Co., Inc.
2. Amber/Booth Company, Inc.
3. Isolation Technology, Inc.
4. Kinetics Noise Control.
5. Mason Industries.
6. Vibration Eliminator Co., Inc.
7. Vibration Isolation.
8. Vibration Mountings & Controls, Inc.

B. Restrained Spring Isolators: Freestanding, steel, open-spring isolators with seismic or limit-stop restraint.

1. Housing: Steel with resilient vertical-limit stops to prevent spring extension due to weight being removed; factory-drilled baseplate bonded to 1/4-inch- thick, neoprene or rubber isolator pad attached to baseplate underside; and adjustable equipment mounting and leveling bolt that acts as blocking during installation.
2. Outside Spring Diameter: Not less than 80 percent of the compressed height of the spring at rated load.
3. Minimum Additional Travel: 50 percent of the required deflection at rated load.
4. Lateral Stiffness: More than 80 percent of rated vertical stiffness.
5. Overload Capacity: Support 200 percent of rated load, fully compressed, without deformation or failure.

2.2 RESTRAINED VIBRATION ISOLATION ROOF-CURB RAILS

A. Manufacturers: Subject to compliance with requirements, provide products by one of the following:

1. Amber/Booth Company, Inc.
2. Isolation Technology, Inc.
3. Kinetics Noise Control.
4. Mason Industries.
5. Thybar Corporation.
6. Vibration Eliminator Co., Inc.
7. Vibration Isolation.
8. Vibration Mountings & Controls, Inc.

B. Spring Isolators: Adjustable, restrained spring isolators shall be mounted on 1/4-inch- thick, elastomeric vibration isolation pads and shall have access ports, for level adjustment, with removable waterproof covers at all isolator locations. Isolators shall be located so they are accessible for adjustment at any time during the life of the installation without interfering with the integrity of the roof.

1. Restrained Spring Isolators: Freestanding, steel, open-spring isolators.

    a. Housing: Steel with resilient vertical-limit stops and adjustable equipment mounting and leveling bolt.
    b. Outside Spring Diameter: Not less than 80 percent of the compressed height of the spring at rated load.
    c. Minimum Additional Travel: 50 percent of the required deflection at rated load.
    d. Lateral Stiffness: More than 80 percent of rated vertical stiffness.
    e. Overload Capacity: Support 200 percent of rated load, fully compressed, without deformation or failure.

PART 3 - EXECUTION

3.1 EXAMINATION

A. Examine areas and equipment to receive vibration isolation and wind-control devices for compliance with requirements for installation tolerances and other conditions affecting performance.

B. Examine roughing-in of reinforcement and cast-in-place anchors to verify actual locations before installation.

C. Proceed with installation only after unsatisfactory conditions have been corrected.

3.2 VIBRATION-CONTROL DEVICE INSTALLATION

A. Comply with requirements in Division 7 Section "Roof Accessories" for installation of roof curbs, equipment supports, and roof penetrations.

B. Attachment to Structure: If specific attachment is not indicated, anchor bracing to structure at flanges of beams, at upper truss chords of bar joists, or at concrete members.

3.3 ADJUSTING

A. Adjust isolators after piping system is at operating weight.

END OF SECTION 15074

SECTION 15075
MECHANICAL IDENTIFICATION

PART 1 - GENERAL

1.1 RELATED DOCUMENTS

A. Drawings and general provisions of the Contract, including General and Supplementary Conditions and Division 1 Specification Sections, apply to this Section.

1.2 SUMMARY

A. This Section includes the following mechanical identification materials and their installation:

1. Equipment nameplates.
2. Access panel and door markers.
3. Pipe markers.
4. Duct markers.
5. Stencils.
6. Valve tags.
7. Valve schedules.

1.3 SUBMITTALS

A. Product Data: For each type of product indicated.

B. Samples: For color, letter style, and graphic representation required for each identification material and device.

C. Valve numbering scheme.

D. Valve Schedules: For each piping system. Furnish extra copies (in addition to mounted copies) to include in maintenance manuals.

1.4 QUALITY ASSURANCE

A. ASME Compliance: Comply with ASME A13.1, "Scheme for the Identification of Piping Systems," for letter size, length of color field, colors, and viewing angles of identification devices for piping.

1.5 COORDINATION

A. Coordinate installation of identifying devices with completion of covering and painting of surfaces where devices are to be applied.

B. Coordinate installation of identifying devices with location of access panels and doors.

C. Install identifying devices before installing acoustical ceilings and similar concealment.

PART 2 - PRODUCTS

2.1 EQUIPMENT IDENTIFICATION DEVICES

A. Equipment Nameplates: Metal, with data engraved or stamped, for permanent attachment on equipment.

1. Data:

a. Manufacturer, product name, model number, and serial number.
b. Capacity, operating and power characteristics, and essential data.
c. Labels of tested compliances.

2. Location: Accessible and visible.
3. Fasteners: As required to mount on equipment.

B. Access Panel and Door Markers: 1/16-inch- thick, engraved laminated plastic, with abbreviated terms and numbers corresponding to identification. Provide 1/8-inch center hole for attachment.

1. Fasteners: Self-tapping, stainless-steel screws or contact-type, permanent adhesive.

2.2 PIPING IDENTIFICATION DEVICES

A. Manufactured Pipe Markers, General: Preprinted, color-coded, with lettering indicating service, and showing direction of flow.

1. Colors: Comply with ASME A13.1, unless otherwise indicated.
2. Lettering: Use piping system terms indicated and abbreviate only as necessary for each application length.
3. Pipes with OD, Including Insulation, Less Than 6 Inches: Full-band pipe markers extending 360 degrees around pipe at each location.
4. Pipes with OD, Including Insulation, 6 Inches and Larger: Either full-band or strip-type pipe markers at least three times letter height and of length required for label.
5. Arrows: Integral with piping system service lettering to accommodate both directions; or as separate unit on each pipe marker to indicate direction of flow.

B. Pretensioned Pipe Markers: Precoiled semirigid plastic formed to cover full circumference of pipe and to attach to pipe without adhesive.

C. Shaped Pipe Markers: Preformed semirigid plastic formed to partially cover circumference of pipe and to attach to pipe with mechanical fasteners that do not penetrate insulation vapor barrier.

2.3 DUCT IDENTIFICATION DEVICES

A. Duct Markers: Engraved, color-coded laminated plastic. Include direction and quantity of airflow and duct service (such as supply, return, and exhaust). Include contact-type, permanent adhesive.

2.4 STENCILS

A. Stencils: Prepared with letter sizes according to ASME A13.1 for piping; minimum letter height of 1-1/4 inches for ducts; and minimum letter height of 3/4 inch for access panel and door markers, equipment markers, equipment signs, and similar operational instructions.

1. Stencil Material: Metal or fiberboard.
2. Stencil Paint: Exterior, gloss, alkyd enamel black, unless otherwise indicated. Paint may be in pressurized spray-can form.
3. Identification Paint: Exterior, alkyd enamel in colors according to ASME A13.1, unless otherwise indicated.

2.5 VALVE TAGS

A. Valve Tags: Stamped or engraved with 1/4-inch letters for piping system abbreviation and 1/2-inch numbers, with numbering scheme approved by Architect. Provide 5/32-inch hole for fastener.

1. Material: 0.032-inch- thick brass.
2. Valve-Tag Fasteners: Brass S-hook.

2.6 VALVE SCHEDULES

A. Valve Schedules: For each piping system, on standard-size bond paper. Tabulate valve number, piping system, system abbreviation (as shown on valve tag), location of valve (room or space), normal-operating position (open, closed, or modulating), and variations for identification. Mark valves for emergency shutoff and similar special uses.

1. Valve-Schedule Frames: Glazed display frame for removable mounting on masonry walls for each page of valve schedule. Include mounting screws.
2. Frame: Extruded aluminum.
3. Glazing: ASTM C 1036, Type I, Class 1, Glazing Quality B, 2.5-mm, single-thickness glass.

PART 3 - EXECUTION

3.1 APPLICATIONS, GENERAL

A. Products specified are for applications referenced in other Division 15 Sections. If more than single-type material, device, or label is specified for listed applications, selection is Installer's option.

3.2 EQUIPMENT IDENTIFICATION

A. Install and permanently fasten equipment nameplates on each major item of mechanical equipment that does not have nameplate or has nameplate that is damaged or located where not easily visible. Locate nameplates where accessible and visible. Include nameplates for the following general categories of equipment:

1. Pumps, compressors and similar motor-driven units.
2. Coils, evaporators and similar equipment.
3. Fans, blowers, primary balancing dampers, and mixing boxes.
4. Packaged HVAC central-station.

B. Install equipment markers with permanent adhesive on or near each major item of mechanical equipment. Data required for markers may be included on signs, and markers may be omitted if both are indicated.

1. Letter Size: Minimum 1/4 inch for name of units if viewing distance is less than 24 inches, 1/2 inch for viewing distances up to 72 inches, and proportionately larger lettering for greater viewing distances. Include secondary lettering two-thirds to three-fourths the size of principal lettering.
2. Data: Distinguish among multiple units, indicate operational requirements, indicate safety and emergency precautions, warn of hazards and improper operations, and identify units.
3. Locate markers where accessible and visible. Include markers for the following general categories of equipment:

    a. Meters, gages, thermometers, and similar units.
    b. Pumps, compressors and similar motor-driven units.
    c. Coils, evaporators and similar equipment.
    d. Fans, blowers, primary balancing dampers, and mixing boxes.
    e. Packaged HVAC central-station.
    f. Strainers, filters and similar equipment.

3.3 PIPING IDENTIFICATION

A. Install manufactured pipe markers indicating service on each piping system. Install with flow indication arrows showing direction of flow.

1. Pipes with OD, Including Insulation, Less Than 6 Inches: Pretensioned pipe markers. Use size to ensure a tight fit.

2. Pipes with OD, Including Insulation, 6 Inches and Larger: Shaped pipe markers. Use size to match pipe and secure with fasteners.

B. Stenciled Pipe Marker Option: Stenciled markers may be provided instead of manufactured pipe markers, at Installer's option. Install stenciled pipe markers with painted, color-coded bands or rectangles on each piping system.

1. Identification Paint: Use for contrasting background.
2. Stencil Paint: Use for pipe marking.

C. Locate pipe markers and color bands where piping is exposed in finished spaces; machine rooms; accessible maintenance spaces such as shafts, tunnels, and plenums; and exterior nonconcealed locations as follows:

1. Near each valve and control device.
2. Near each branch connection, excluding short takeoffs for fixtures and terminal units. Where flow pattern is not obvious, mark each pipe at branch.
3. Near penetrations through walls, floors, ceilings, and nonaccessible enclosures.
4. At access doors, manholes, and similar access points that permit view of concealed piping.
5. Near major equipment items and other points of origination and termination.
6. Spaced at maximum intervals of 50 feet along each run. Reduce intervals to 25 feet in areas of congested piping and equipment.
7. On piping above removable acoustical ceilings. Omit intermediately spaced markers.

3.4 DUCT IDENTIFICATION

A. Install duct markers with permanent adhesive on air ducts in the following color codes:

1. Green: For cold-air supply ducts.
2. Blue: For exhaust-, outside-, relief-, return-, and mixed-air ducts.
3. Letter Size: Minimum 1/4 inch for name of units if viewing distance is less than 24 inches, 1/2 inch for viewing distances up to 72 inches, and proportionately larger lettering for greater viewing distances. Include secondary lettering two-thirds to three-fourths the size of principal lettering.

B. Stenciled Duct Marker Option: Stenciled markers, showing service and direction of flow, may be provided instead of laminated-plastic duct markers, at Installer's option, if lettering larger than 1 inch high is needed for proper identification because of distance from normal location of required identification.

C. Locate markers near points where ducts enter into concealed spaces and at maximum intervals of 50 feet in each space where ducts are exposed or concealed by removable ceiling system.

3.5 VALVE-TAG INSTALLATION

A. Install tags on valves and control devices in piping systems, except check valves; valves within factory-fabricated equipment units; plumbing fixture supply stops; shutoff valves; faucets;

convenience and lawn-watering hose connections; and HVAC terminal devices and similar roughing-in connections of end-use fixtures and units. List tagged valves in a valve schedule.

B. Valve-Tag Application Schedule: Tag valves according to size, shape, and color scheme and with captions similar to those indicated in the following:

1. Valve-Tag Size and Shape:

   a. Cold Water: 1-1/2 inches, round.
   b. Hot Water: 1-1/2 inches, round.

2. Valve-Tag Color:

   a. Cold Water: Black.
   b. Hot Water: White.

3. Letter Color:

   a. Cold Water: White.
   b. Hot Water: Black.

3.6 VALVE-SCHEDULE INSTALLATION

A. Mount valve schedule on wall in accessible location in each major equipment room.

3.7 ADJUSTING

A. Relocate mechanical identification materials and devices that have become visually blocked by other work.

3.8 CLEANING

A. Clean faces of mechanical identification devices and glass frames of valve schedules.

END OF SECTION 15075

SECTION 15080
MECHANICAL INSULATION

PART 1 - GENERAL

1.1 RELATED DOCUMENTS

A. Drawings and general provisions of the Contract, including General and Supplementary Conditions and Division 1 Specification Sections, apply to this Section.

1.2 SUMMARY

A. This Section includes mechanical insulation for boiler breeching, duct, equipment, and pipe, including the following:

1. Insulation Materials:

    a. Flexible elastomeric.
    b. Mineral fiber.
    c. Polyolefin.

2. Insulating cements.
3. Adhesives.
4. Mastics.
5. Sealants.
6. Factory-applied jackets.
7. Tapes.
8. Securements.
9. Corner angles.

B. Related Sections include the following:

1. Division 15 Section "Metal Ducts" for duct liners.

1.3 DEFINITIONS

A. ASJ: All-service jacket.

B. FSK: Foil, scrim, kraft paper.

C. FSP: Foil, scrim, polyethylene.

D. SSL: Self-sealing lap.

1.4 SUBMITTALS

A. Product Data: For each type of product indicated, identify thermal conductivity, thickness, and jackets (both factory and field applied, if any).

1.5 QUALITY ASSURANCE

A. Installer Qualifications: Skilled mechanics who have successfully completed an apprenticeship program or another craft training program certified by the Department of Labor, Bureau of Apprenticeship and Training.

B. Fire-Test-Response Characteristics: Insulation and related materials shall have fire-test-response characteristics indicated, as determined by testing identical products per ASTM E 84, by a testing and inspecting agency acceptable to authorities having jurisdiction. Factory label insulation and jacket materials and adhesive, mastic, and cement material containers, with appropriate markings of applicable testing and inspecting agency.

1. Insulation Installed Indoors: Flame-spread index of 25 or less, and smoke-developed index of 50 or less.
2. Insulation Installed Outdoors: Flame-spread index of 75 or less, and smoke-developed index of 150 or less.

1.6 DELIVERY, STORAGE, AND HANDLING

A. Packaging: Insulation material containers shall be marked by manufacturer with appropriate ASTM standard designation, type and grade, and maximum use temperature.

1.7 COORDINATION

A. Coordinate size and location of supports, hangers, and insulation shields specified in Division 15 Section "Hangers and Supports."

B. Coordinate clearance requirements with piping Installer for piping insulation application, duct Installer for duct insulation application, and equipment Installer for equipment insulation application. Before preparing piping and ductwork Shop Drawings, establish and maintain clearance requirements for installation of insulation and field-applied jackets and finishes and for space required for maintenance.

1.8 SCHEDULING

A. Schedule insulation application after pressure testing systems and, where required, after installing and testing heat tracing. Insulation application may begin on segments that have satisfactory test results.

B. Complete installation and concealment of plastic materials as rapidly as possible in each area of construction.

PART 2 - PRODUCTS

2.1 MANUFACTURERS

A. In other Part 2 articles where titles below introduce lists, the following requirements apply to product selection:

1. Manufacturers: Subject to compliance with requirements, provide products by one of the manufacturers specified.

2.2 INSULATION MATERIALS

A. Refer to Part 3 schedule articles for requirements about where insulating materials shall be applied.

B. Products shall not contain asbestos, lead, mercury, or mercury compounds.

C. Products that come in contact with stainless steel shall have a leachable chloride content of less than 50 ppm when tested according to ASTM C 871.

D. Insulation materials for use on austenitic stainless steel shall be qualified as acceptable according to ASTM C 795.

E. Foam insulation materials shall not use CFC or HCFC blowing agents in the manufacturing process.

F. Flexible Elastomeric: Closed-cell, sponge- or expanded-rubber materials. Comply with ASTM C 534, Type I for tubular materials and Type II for sheet materials.

1. Products:

a. Aeroflex USA Inc.; Aerocel.
b. Armacell LLC; AP Armaflex.
c. RBX Corporation; Insul-Sheet 1800 and Insul-Tube 180.

G. Mineral-Fiber Blanket Insulation: Mineral or glass fibers bonded with a thermosetting resin. Comply with ASTM C 553, Type II and ASTM C 1290, Type III with factory-applied FSK jacket. Factory-applied jacket requirements are specified in Part 2 "Factory-Applied Jackets" Article.

1. Products:

a. CertainTeed Corp.; Duct Wrap.
b. Johns Manville; Microlite.
c. Knauf Insulation; Duct Wrap.
d. Manson Insulation Inc.; Alley Wrap.

e. Owens Corning; All-Service Duct Wrap.

H. Mineral-Fiber Board Insulation: Mineral or glass fibers bonded with a thermosetting resin. Comply with ASTM C 612, Type IA or Type IB. For duct and plenum applications, provide insulation with factory-applied ASJ. For equipment applications, provide insulation with factory-applied ASJ. Factory-applied jacket requirements are specified in Part 2 "Factory-Applied Jackets" Article.

1. Products:

a. CertainTeed Corp.; Commercial Board.
b. Fibrex Insulations Inc.; FBX.
c. Johns Manville; 800 Series Spin-Glas.
d. Knauf Insulation; Insulation Board.
e. Manson Insulation Inc.; AK Board.
f. Owens Corning; Fiberglas 700 Series.

I. Mineral-Fiber, Preformed Pipe Insulation:

1. Products:

a. Fibrex Insulations Inc.; Coreplus 1200.
b. Johns Manville; Micro-Lok.
c. Knauf Insulation; 1000(Pipe Insulation.
d. Manson Insulation Inc.; Alley-K.
e. Owens Corning; Fiberglas Pipe Insulation.

2. Type I, 850 deg F Materials: Mineral or glass fibers bonded with a thermosetting resin. Comply with ASTM C 547, Type I, Grade A, with factory-applied ASJ-SSL. Factory-applied jacket requirements are specified in Part 2 "Factory-Applied Jackets" Article.

J. Mineral-Fiber, Pipe Insulation: Mineral or glass fibers bonded with a thermosetting resin. Semirigid board material with factory-applied ASJ complying with ASTM C 1393, Type II or Type IIIA Category 2, or with properties similar to ASTM C 612, Type IB. Nominal density is 2.5 lb/cu. ft. or more. Thermal conductivity (k-value) at 100 deg F is 0.29 Btu x in./h x sq. ft. x deg F or less. Factory-applied jacket requirements are specified in Part 2 "Factory-Applied Jackets" Article.

1. Products:

a. CertainTeed Corp.; CrimpWrap.
b. Johns Manville; MicroFlex.
c. Knauf Insulation; Pipe and Tank Insulation.
d. Manson Insulation Inc.; AK Flex.
e. Owens Corning; Fiberglas Pipe and Tank Insulation.

K. Polyolefin: Unicellular, polyethylene thermal plastic insulation. Comply with ASTM C 534 or ASTM C 1427, Type I, Grade 1 for tubular materials and Type II, Grade 1 for sheet materials.

1. Products:

a. Armacell LLC; Tubolit.
b. Nomaco Inc.; IMCOLOCK, IMCOSHEET, NOMALOCK, and NOMAPLY.
c. RBX Corporation; Therma-cell.

2.3 INSULATING CEMENTS

A. Mineral-Fiber Insulating Cement: Comply with ASTM C 195.

1. Products:

a. Insulco, Division of MFS, Inc.; Triple I.
b. P. K. Insulation Mfg. Co., Inc.; Super-Stik.

2.4 ADHESIVES

A. Materials shall be compatible with insulation materials, jackets, and substrates and for bonding insulation to itself and to surfaces to be insulated, unless otherwise indicated.

B. Flexible Elastomeric and Polyolefin Adhesive: Comply with MIL-A-24179A, Type II, Class I.

1. Products:

a. Aeroflex USA Inc.; Aeroseal.
b. Armacell LCC; 520 Adhesive.
c. Foster Products Corporation, H. B. Fuller Company; 85-75.
d. RBX Corporation; Rubatex Contact Adhesive.

C. Mineral-Fiber Adhesive: Comply with MIL-A-3316C, Class 2, Grade A.

1. Products:

a. Childers Products, Division of ITW; CP-82.
b. Foster Products Corporation, H. B. Fuller Company; 85-20.
c. ITW TACC, Division of Illinois Tool Works; S-90/80.
d. Marathon Industries, Inc.; 225.
e. Mon-Eco Industries, Inc.; 22-25.

D. ASJ Adhesive, and FSK and PVDC Jacket Adhesive: Comply with MIL-A-3316C, Class 2, Grade A for bonding insulation jacket lap seams and joints.

1. Products:

a. Childers Products, Division of ITW; CP-82.
b. Foster Products Corporation, H. B. Fuller Company; 85-20.
c. ITW TACC, Division of Illinois Tool Works; S-90/80.
d. Marathon Industries, Inc.; 225.
e. Mon-Eco Industries, Inc.; 22-25.

E. PVC Jacket Adhesive: Compatible with PVC jacket.

1. Products:

a. Dow Chemical Company (The); 739, Dow Silicone.
b. Johns-Manville; Zeston Perma-Weld, CEEL-TITE Solvent Welding Adhesive.
c. P.I.C. Plastics, Inc.; Welding Adhesive.
d. Red Devil, Inc.; Celulon Ultra Clear.
e. Speedline Corporation; Speedline Vinyl Adhesive.

2.5 MASTICS

A. Materials shall be compatible with insulation materials, jackets, and substrates; comply with MIL-C-19565C, Type II.

B. Vapor-Barrier Mastic: Solvent based; suitable for indoor use on below ambient services.

1. Products:

a. Childers Products, Division of ITW; CP-30.
b. Foster Products Corporation, H. B. Fuller Company; 30-35.
c. ITW TACC, Division of Illinois Tool Works; CB-25.
d. Marathon Industries, Inc.; 501.
e. Mon-Eco Industries, Inc.; 55-10.

2. Water-Vapor Permeance: ASTM F 1249, 0.05 perm at 35-mil dry film thickness.
3. Service Temperature Range: 0 to 180 deg F.
4. Solids Content: ASTM D 1644, 44 percent by volume and 62 percent by weight.
5. Color: White.

2.6 SEALANTS

A. FSK and Metal Jacket Flashing Sealants:

1. Products:

a. Childers Products, Division of ITW; CP-76-8.
b. Foster Products Corporation, H. B. Fuller Company; 95-44.
c. Marathon Industries, Inc.; 405.
d. Mon-Eco Industries, Inc.; 44-05.
e. Vimasco Corporation; 750.

2. Materials shall be compatible with insulation materials, jackets, and substrates.
3. Fire- and water-resistant, flexible, elastomeric sealant.
4. Service Temperature Range: Minus 40 to plus 250 deg F.
5. Color: Aluminum.

B. ASJ Flashing Sealants, and Vinyl, PVDC, and PVC Jacket Flashing Sealants:

1. Products:

a. Childers Products, Division of ITW; CP-76.

2. Materials shall be compatible with insulation materials, jackets, and substrates.
3. Fire- and water-resistant, flexible, elastomeric sealant.
4. Service Temperature Range: Minus 40 to plus 250 deg F.
5. Color: White.

2.7 FACTORY-APPLIED JACKETS

A. Insulation system schedules indicate factory-applied jackets on various applications. When factory-applied jackets are indicated, comply with the following:

1. ASJ: White, kraft-paper, fiberglass-reinforced scrim with aluminum-foil backing; complying with ASTM C 1136, Type I.
2. ASJ-SSL: ASJ with self-sealing, pressure-sensitive, acrylic-based adhesive covered by a removable protective strip; complying with ASTM C 1136, Type I.
3. FSK Jacket: Aluminum-foil, fiberglass-reinforced scrim with kraft-paper backing; complying with ASTM C 1136, Type II.
4. Vinyl Jacket: UL-rated white vinyl with a permeance of 1.3 perms when tested according to ASTM E 96, Procedure A, and complying with NFPA 90A and NFPA 90B.

2.8 FIELD-APPLIED JACKETS

A. Field-applied jackets shall comply with ASTM C 921, Type I, unless otherwise indicated.

B. FSK Jacket: Aluminum-foil-face, fiberglass-reinforced scrim with kraft-paper backing.

C. PVC Jacket: High-impact-resistant, UV-resistant PVC complying with ASTM D 1784, Class 16354-C; thickness as scheduled; roll stock ready for shop or field cutting and forming. Thickness is indicated in field-applied jacket schedules.

1. Products:

a. Johns Manville; Zeston.
b. P.I.C. Plastics, Inc.; FG Series.
c. Proto PVC Corporation; LoSmoke.
d. Speedline Corporation; SmokeSafe.

2. Adhesive: As recommended by jacket material manufacturer.
3. Color: White.
4. Factory-fabricated fitting covers to match jacket if available; otherwise, field fabricate.

a. Shapes: 45- and 90-degree, short- and long-radius elbows, tees, valves, flanges, unions, reducers, end caps, soil-pipe hubs, traps, mechanical joints, and P-trap and supply covers for lavatories.

5. Factory-fabricated tank heads and tank side panels.

2.9 TAPES

A. ASJ Tape: White vapor-retarder tape matching factory-applied jacket with acrylic adhesive, complying with ASTM C 1136 and UL listed.

1. Products:

a. Avery Dennison Corporation, Specialty Tapes Division; Fasson 0835.
b. Compac Corp.; 104 and 105.
c. Ideal Tape Co., Inc., an American Biltrite Company; 428 AWF ASJ.
d. Venture Tape; 1540 CW Plus, 1542 CW Plus, and 1542 CW Plus/SQ.

2. Width: 3 inches.
3. Thickness: 11.5 mils.
4. Adhesion: 90 ounces force/inch in width.
5. Elongation: 2 percent.
6. Tensile Strength: 40 lbf/inch in width.
7. ASJ Tape Disks and Squares: Precut disks or squares of ASJ tape.

B. FSK Tape: Foil-face, vapor-retarder tape matching factory-applied jacket with acrylic adhesive; complying with ASTM C 1136 and UL listed.

1. Products:

a. Avery Dennison Corporation, Specialty Tapes Division; Fasson 0827.
b. Compac Corp.; 110 and 111.
c. Ideal Tape Co., Inc., an American Biltrite Company; 491 AWF FSK.
d. Venture Tape; 1525 CW, 1528 CW, and 1528 CW/SQ.

2. Width: 3 inches.
3. Thickness: 6.5 mils.
4. Adhesion: 90 ounces force/inch in width.
5. Elongation: 2 percent.
6. Tensile Strength: 40 lbf/inch in width.
7. FSK Tape Disks and Squares: Precut disks or squares of FSK tape.

C. PVC Tape: White vapor-retarder tape matching field-applied PVC jacket with acrylic adhesive. Suitable for indoor and outdoor applications.

1. Products:

a. Avery Dennison Corporation, Specialty Tapes Division; Fasson 0555.
b. Compac Corp.; 130.
c. Ideal Tape Co., Inc., an American Biltrite Company; 370 White PVC tape.

d. Venture Tape; 1506 CW NS.

2. Width: 2 inches.
3. Thickness: 6 mils.
4. Adhesion: 64 ounces force/inch in width.
5. Elongation: 500 percent.
6. Tensile Strength: 18 lbf/inch in width.

D. Aluminum-Foil Tape: Vapor-retarder tape with acrylic adhesive and UL listed.

1. Products:

a. Avery Dennison Corporation, Specialty Tapes Division; Fasson 0800.
b. Compac Corp.; 120.
c. Ideal Tape Co., Inc., an American Biltrite Company; 488 AWF.
d. Venture Tape; 3520 CW.

2. Width: 2 inches.
3. Thickness: 3.7 mils.
4. Adhesion: 100 ounces force/inch in width.
5. Elongation: 5 percent.
6. Tensile Strength: 34 lbf/inch in width.

2.10 SECUREMENTS

A. Insulation Pins and Hangers:

1. Capacitor-Discharge-Weld Pins: Copper- or zinc-coated steel pin, fully annealed for capacitor-discharge welding, 0.106-inch- diameter shank, length to suit depth of insulation indicated.

a. Products:

1) AGM Industries, Inc.; CWP-1.
2) GEMCO; CD.
3) Midwest Fasteners, Inc.; CD.
4) Nelson Stud Welding; TPA, TPC, and TPS.

2. Cupped-Head, Capacitor-Discharge-Weld Pins: Copper- or zinc-coated steel pin, fully annealed for capacitor-discharge welding, 0.106-inch- diameter shank, length to suit depth of insulation indicated with integral 1-1/2-inch galvanized carbon-steel washer.

a. Products:

1) AGM Industries, Inc.; CWP-1.
2) GEMCO; Cupped Head Weld Pin.
3) Midwest Fasteners, Inc.; Cupped Head.
4) Nelson Stud Welding; CHP.

3. Metal, Adhesively Attached, Perforated-Base Insulation Hangers: Baseplate welded to projecting spindle that is capable of holding insulation, of thickness indicated, securely in position indicated when self-locking washer is in place. Comply with the following requirements:

   a. Products:

      1) AGM Industries, Inc.; Tactoo Insul-Hangers, Series T.
      2) GEMCO; Perforated Base.
      3) Midwest Fasteners, Inc.; Spindle.

   b. Baseplate: Perforated, galvanized carbon-steel sheet, 0.030 inch thick by 2 inches square.
   c. Spindle: Copper- or zinc-coated, low carbon steel, fully annealed, 0.106-inch-diameter shank, length to suit depth of insulation indicated.
   d. Adhesive: Recommended by hanger manufacturer. Product with demonstrated capability to bond insulation hanger securely to substrates indicated without damaging insulation, hangers, and substrates.

4. Nonmetal, Adhesively Attached, Perforated-Base Insulation Hangers: Baseplate fastened to projecting spindle that is capable of holding insulation, of thickness indicated, securely in position indicated when self-locking washer is in place. Comply with the following requirements:

   a. Products:

      1) GEMCO; Nylon Hangers.
      2) Midwest Fasteners, Inc.; Nylon Insulation Hangers.

   b. Baseplate: Perforated, nylon sheet, 0.030 inch thick by 1-1/2 inches in diameter.
   c. Spindle: Nylon, 0.106-inch- diameter shank, length to suit depth of insulation indicated, up to 2-1/2 inches.
   d. Adhesive: Recommended by hanger manufacturer. Product with demonstrated capability to bond insulation hanger securely to substrates indicated without damaging insulation, hangers, and substrates.

5. Self-Sticking-Base Insulation Hangers: Baseplate welded to projecting spindle that is capable of holding insulation, of thickness indicated, securely in position indicated when self-locking washer is in place. Comply with the following requirements:

   a. Products:

      1) AGM Industries, Inc.; Tactoo Insul-Hangers, Series TSA.
      2) GEMCO; Press and Peel.
      3) Midwest Fasteners, Inc.; Self Stick.

   b. Baseplate: Galvanized carbon-steel sheet, 0.030 inch thick by 2 inches square.
   c. Spindle: Copper- or zinc-coated, low carbon steel, fully annealed, 0.106-inch-diameter shank, length to suit depth of insulation indicated.
   d. Adhesive-backed base with a peel-off protective cover.

6. Insulation-Retaining Washers: Self-locking washers formed from 0.016-inch- thick, galvanized-steel sheet, with beveled edge sized as required to hold insulation securely in place but not less than 1-1/2 inches in diameter.

   a. Products:

      1) AGM Industries, Inc.; RC-150.
      2) GEMCO; R-150.
      3) Midwest Fasteners, Inc.; WA-150.
      4) Nelson Stud Welding; Speed Clips.

   b. Protect ends with capped self-locking washers incorporating a spring steel insert to ensure permanent retention of cap in exposed locations.

7. Nonmetal Insulation-Retaining Washers: Self-locking washers formed from 0.016-inch-thick nylon sheet, with beveled edge sized as required to hold insulation securely in place but not less than 1-1/2 inches in diameter.

   a. Manufacturers:

      1) GEMCO.
      2) Midwest Fasteners, Inc.

B. Staples: Outward-clinching insulation staples, nominal 3/4-inch- wide, stainless steel or Monel.

C. Wire: 0.080-inch nickel-copper alloy.

   1. Manufacturers:

      a. ACS Industries, Inc.
      b. C & F Wire.
      c. Childers Products.
      d. PABCO Metals Corporation.
      e. RPR Products, Inc.

2.11 CORNER ANGLES

A. PVC Corner Angles: 30 mils thick, minimum 1 by 1 inch, PVC according to ASTM D 1784, Class 16354-C. White or color-coded to match adjacent surface.

B. Aluminum Corner Angles: 0.040 inch thick, minimum 1 by 1 inch, aluminum according to ASTM B 209, Alloy 3003, 3005, 3105 or 5005; Temper H-14.

PART 3 - EXECUTION

3.1 EXAMINATION

A. Examine substrates and conditions for compliance with requirements for installation and other conditions affecting performance of insulation application.

1. Verify that systems and equipment to be insulated have been tested and are free of defects.
2. Verify that surfaces to be insulated are clean and dry.
3. Proceed with installation only after unsatisfactory conditions have been corrected.

3.2 PREPARATION

A. Surface Preparation: Clean and dry surfaces to receive insulation. Remove materials that will adversely affect insulation application.

B. Coordinate insulation installation with the trade installing heat tracing. Comply with requirements for heat tracing that apply to insulation.

C. Mix insulating cements with clean potable water; if insulating cements are to be in contact with stainless-steel surfaces, use demineralized water.

3.3 COMMON INSTALLATION REQUIREMENTS

A. Install insulation materials, accessories, and finishes with smooth, straight, and even surfaces; free of voids throughout the length of equipment, ducts and fittings, and piping including fittings, valves, and specialties.

B. Install insulation materials, forms, vapor barriers or retarders, jackets, and thicknesses required for each item of equipment, duct system, and pipe system as specified in insulation system schedules.

C. Install accessories compatible with insulation materials and suitable for the service. Install accessories that do not corrode, soften, or otherwise attack insulation or jacket in either wet or dry state.

D. Install insulation with longitudinal seams at top and bottom of horizontal runs.

E. Install multiple layers of insulation with longitudinal and end seams staggered.

F. Do not weld brackets, clips, or other attachment devices to piping, fittings, and specialties.

G. Keep insulation materials dry during application and finishing.

H. Install insulation with tight longitudinal seams and end joints. Bond seams and joints with adhesive recommended by insulation material manufacturer.

I. Install insulation with least number of joints practical.

J. Where vapor barrier is indicated, seal joints, seams, and penetrations in insulation at hangers, supports, anchors, and other projections with vapor-barrier mastic.

1. Install insulation continuously through hangers and around anchor attachments.
2. For insulation application where vapor barriers are indicated, extend insulation on anchor legs from point of attachment to supported item to point of attachment to structure. Taper and seal ends at attachment to structure with vapor-barrier mastic.

3. Install insert materials and install insulation to tightly join the insert. Seal insulation to insulation inserts with adhesive or sealing compound recommended by insulation material manufacturer.
4. Cover inserts with jacket material matching adjacent pipe insulation. Install shields over jacket, arranged to protect jacket from tear or puncture by hanger, support, and shield.

K. Apply adhesives, mastics, and sealants at manufacturer's recommended coverage rate and wet and dry film thicknesses.

L. Install insulation with factory-applied jackets as follows:

1. Draw jacket tight and smooth.
2. Cover circumferential joints with 3-inch- wide strips, of same material as insulation jacket. Secure strips with adhesive and outward clinching staples along both edges of strip, spaced 4 inches o.c.
3. Overlap jacket longitudinal seams at least 1-1/2 inches. Install insulation with longitudinal seams at bottom of pipe. Clean and dry surface to receive self-sealing lap. Staple laps with outward clinching staples along edge at 2 inches o.c.

    a. For below ambient services, apply vapor-barrier mastic over staples.

4. Cover joints and seams with tape as recommended by insulation material manufacturer to maintain vapor seal.
5. Where vapor barriers are indicated, apply vapor-barrier mastic on seams and joints and at ends adjacent to duct and pipe flanges and fittings.

M. Cut insulation in a manner to avoid compressing insulation more than 75 percent of its nominal thickness.

N. Finish installation with systems at operating conditions. Repair joint separations and cracking due to thermal movement.

O. Repair damaged insulation facings by applying same facing material over damaged areas. Extend patches at least 4 inches beyond damaged areas. Adhere, staple, and seal patches similar to butt joints.

P. For above ambient services, do not install insulation to the following:

1. Vibration-control devices.
2. Testing agency labels and stamps.
3. Nameplates and data plates.
4. Manholes.
5. Handholes.
6. Cleanouts.

3.4 PENETRATIONS

A. Insulation Installation at Roof Penetrations: Install insulation continuously through roof penetrations.

1. Seal penetrations with flashing sealant.
2. For applications requiring only indoor insulation, terminate insulation above roof surface and seal with joint sealant. For applications requiring indoor and outdoor insulation, install insulation for outdoor applications tightly joined to indoor insulation ends. Seal joint with joint sealant.
3. Extend jacket of outdoor insulation outside roof flashing at least 2 inches below top of roof flashing.
4. Seal jacket to roof flashing with flashing sealant.

B. Insulation Installation at Below-Grade Exterior Wall Penetrations: Terminate insulation flush with sleeve seal. Seal terminations with flashing sealant.

C. Insulation Installation at Aboveground Exterior Wall Penetrations: Install insulation continuously through wall penetrations.

1. Seal penetrations with flashing sealant.
2. For applications requiring only indoor insulation, terminate insulation inside wall surface and seal with joint sealant. For applications requiring indoor and outdoor insulation, install insulation for outdoor applications tightly joined to indoor insulation ends. Seal joint with joint sealant.
3. Extend jacket of outdoor insulation outside wall flashing and overlap wall flashing at least 2 inches.
4. Seal jacket to wall flashing with flashing sealant.

D. Insulation Installation at Interior Wall and Partition Penetrations (That Are Not Fire Rated): Install insulation continuously through walls and partitions.

E. Insulation Installation at Fire-Rated Wall and Partition Penetrations: Install insulation continuously through penetrations of fire-rated walls and partitions. Terminate insulation at fire damper sleeves for fire-rated wall and partition penetrations. Externally insulate damper sleeves to match adjacent insulation and overlap duct insulation at least 2 inches.

1. Firestopping and fire-resistive joint sealers are specified in Division 7 Section "Through-Penetration Firestop Systems."

F. Insulation Installation at Floor Penetrations:

1. Duct: Install insulation continuously through floor penetrations that are not fire rated. For penetrations through fire-rated assemblies, terminate insulation at fire damper sleeves and externally insulate damper sleeve beyond floor to match adjacent duct insulation. Overlap damper sleeve and duct insulation at least 2 inches.
2. Pipe: Install insulation continuously through floor penetrations.
3. Seal penetrations through fire-rated assemblies according to Division 7 Section "Through-Penetration Firestop Systems."

3.5 DUCT AND PLENUM INSULATION INSTALLATION

A. Blanket Insulation Installation on Ducts and Plenums: Secure with adhesive and insulation pins.

1. Apply adhesives according to manufacturer's recommended coverage rates per unit area, for 50 percent coverage of duct and plenum surfaces.
2. Apply adhesive to entire circumference of ducts and to all surfaces of fittings and transitions.
3. Install either capacitor-discharge-weld pins and speed washers or cupped-head, capacitor-discharge-weld pins on sides and bottom of horizontal ducts and sides of vertical ducts as follows:

    a. On duct sides with dimensions 18 inches and smaller, place pins along longitudinal centerline of duct. Space 3 inches maximum from insulation end joints, and 16 inches o.c.
    b. On duct sides with dimensions larger than 18 inches, place pins 16 inches o.c. each way, and 3 inches maximum from insulation joints. Install additional pins to hold insulation tightly against surface at cross bracing.

3.6 EQUIPMENT INSULATION INSTALLATION

A. Secure insulation with adhesive and anchor pins and speed washers.

1. Apply adhesives according to manufacturer's recommended coverage rates per unit area, for 50 percent coverage of tank and vessel surfaces.
2. Groove and score insulation materials to fit as closely as possible to equipment, including contours. Bevel insulation edges for cylindrical surfaces for tight joints. Stagger end joints.
3. Protect exposed corners with secured corner angles.
4. Install adhesively attached or self-sticking insulation hangers and speed washers on sides of tanks and vessels as follows:

    a. Do not weld anchor pins to ASME-labeled pressure vessels.
    b. Select insulation hangers and adhesive that are compatible with service temperature and with substrate.
    c. On tanks and vessels, maximum anchor-pin spacing is 3 inches from insulation end joints, and 16 inches o.c. in both directions.
    d. Do not overcompress insulation during installation.
    e. Cut and miter insulation segments to fit curved sides and domed heads of tanks and vessels.
    f. Impale insulation over anchor pins and attach speed washers.
    g. Cut excess portion of pins extending beyond speed washers or bend parallel with insulation surface. Cover exposed pins and washers with tape matching insulation facing.

5. Secure each layer of insulation with stainless-steel or aluminum bands. Select band material compatible with insulation materials.
6. Where insulation hangers on equipment and vessels are not permitted or practical and where insulation support rings are not provided, install a girdle network for securing insulation. Stretch prestressed aircraft cable around the diameter of vessel and make taut with clamps, turnbuckles, or breather springs. Place one circumferential girdle around equipment approximately 6 inches from each end. Install wire or cable between two circumferential girdles 12 inches o.c. Install a wire ring around each end and around outer periphery of center openings, and stretch prestressed aircraft cable radially from the

wire ring to nearest circumferential girdle. Install additional circumferential girdles along the body of equipment or tank at a minimum spacing of 48 inches o.c. Use this network for securing insulation with tie wire or bands.

7. Stagger joints between insulation layers at least 3 inches.
8. Install insulation in removable segments on equipment access doors, manholes, handholes, and other elements that require frequent removal for service and inspection.
9. Bevel and seal insulation ends around manholes, handholes, ASME stamps, and nameplates.
10. For equipment with surface temperatures below ambient, apply mastic to open ends, joints, seams, breaks, and punctures in insulation.

3.7 GENERAL PIPE INSULATION INSTALLATION

A. Requirements in this Article generally apply to all insulation materials except where more specific requirements are specified in various pipe insulation material installation articles.

B. Insulation Installation on Fittings, Valves, Strainers, Flanges, and Unions:

1. Install insulation over fittings, valves, strainers, flanges, unions, and other specialties with continuous thermal and vapor-retarder integrity, unless otherwise indicated.
2. Insulate pipe elbows using preformed fitting insulation or mitered fittings made from same material and density as adjacent pipe insulation. Each piece shall be butted tightly against adjoining piece and bonded with adhesive. Fill joints, seams, voids, and irregular surfaces with insulating cement finished to a smooth, hard, and uniform contour that is uniform with adjoining pipe insulation.
3. Insulate tee fittings with preformed fitting insulation or sectional pipe insulation of same material and thickness as used for adjacent pipe. Cut sectional pipe insulation to fit. Butt each section closely to the next and hold in place with tie wire. Bond pieces with adhesive.
4. Insulate valves using preformed fitting insulation or sectional pipe insulation of same material, density, and thickness as used for adjacent pipe. Overlap adjoining pipe insulation by not less than two times the thickness of pipe insulation, or one pipe diameter, whichever is thicker. For valves, insulate up to and including the bonnets, valve stuffing-box studs, bolts, and nuts. Fill joints, seams, and irregular surfaces with insulating cement.
5. Insulate strainers using preformed fitting insulation or sectional pipe insulation of same material, density, and thickness as used for adjacent pipe. Overlap adjoining pipe insulation by not less than two times the thickness of pipe insulation, or one pipe diameter, whichever is thicker. Fill joints, seams, and irregular surfaces with insulating cement. Insulate strainers so strainer basket flange or plug can be easily removed and replaced without damaging the insulation and jacket. Provide a removable reusable insulation cover. For below ambient services, provide a design that maintains vapor barrier.
6. Insulate flanges and unions using a section of oversized preformed pipe insulation. Overlap adjoining pipe insulation by not less than two times the thickness of pipe insulation, or one pipe diameter, whichever is thicker.
7. Cover segmented insulated surfaces with a layer of finishing cement and coat with a mastic. Install vapor-barrier mastic for below ambient services and a breather mastic for above ambient services. Reinforce the mastic with fabric-reinforcing mesh. Trowel the mastic to a smooth and well-shaped contour.

8. For services not specified to receive a field-applied jacket except for flexible elastomeric and polyolefin, install fitted PVC cover over elbows, tees, strainers, valves, flanges, and unions. Terminate ends with PVC end caps. Tape PVC covers to adjoining insulation facing using PVC tape.
9. Stencil or label the outside insulation jacket of each union with the word "UNION." Match size and color of pipe labels.

C. Insulate instrument connections for thermometers, pressure gages, pressure temperature taps, test connections, flow meters, sensors, switches, and transmitters on insulated pipes, vessels, and equipment. Shape insulation at these connections by tapering it to and around the connection with insulating cement and finish with finishing cement, mastic, and flashing sealant.

D. Install removable insulation covers at locations indicated. Installation shall conform to the following:

1. Make removable flange and union insulation from sectional pipe insulation of same thickness as that on adjoining pipe. Install same insulation jacket as adjoining pipe insulation.
2. When flange and union covers are made from sectional pipe insulation, extend insulation from flanges or union long at least two times the insulation thickness over adjacent pipe insulation on each side of flange or union. Secure flange cover in place with stainless-steel or aluminum bands. Select band material compatible with insulation and jacket.
3. Construct removable valve insulation covers in same manner as for flanges except divide the two-part section on the vertical center line of valve body.
4. When covers are made from block insulation, make two halves, each consisting of mitered blocks wired to stainless-steel fabric. Secure this wire frame, with its attached insulation, to flanges with tie wire. Extend insulation at least 2 inches over adjacent pipe insulation on each side of valve. Fill space between flange or union cover and pipe insulation with insulating cement. Finish cover assembly with insulating cement applied in two coats. After first coat is dry, apply and trowel second coat to a smooth finish.
5. Unless a PVC jacket is indicated in field-applied jacket schedules, finish exposed surfaces with a metal jacket.

3.8 FLEXIBLE ELASTOMERIC INSULATION INSTALLATION

A. Seal longitudinal seams and end joints with manufacturer's recommended adhesive to eliminate openings in insulation that allow passage of air to surface being insulated.

B. Insulation Installation on Pipe Flanges:

1. Install pipe insulation to outer diameter of pipe flange.
2. Make width of insulation section same as overall width of flange and bolts, plus twice the thickness of pipe insulation.
3. Fill voids between inner circumference of flange insulation and outer circumference of adjacent straight pipe segments with cut sections of sheet insulation of same thickness as pipe insulation.
4. Secure insulation to flanges and seal seams with manufacturer's recommended adhesive to eliminate openings in insulation that allow passage of air to surface being insulated.

C. Insulation Installation on Pipe Fittings and Elbows:

1. Install mitered sections of pipe insulation.
2. Secure insulation materials and seal seams with manufacturer's recommended adhesive to eliminate openings in insulation that allow passage of air to surface being insulated.

D. Insulation Installation on Valves and Pipe Specialties:

1. Install preformed valve covers manufactured of same material as pipe insulation when available.
2. When preformed valve covers are not available, install cut sections of pipe and sheet insulation to valve body. Arrange insulation to permit access to packing and to allow valve operation without disturbing insulation.
3. Install insulation to flanges as specified for flange insulation application.
4. Secure insulation to valves and specialties and seal seams with manufacturer's recommended adhesive to eliminate openings in insulation that allow passage of air to surface being insulated.

3.9 MINERAL-FIBER INSULATION INSTALLATION

A. Insulation Installation on Straight Pipes and Tubes:

1. Secure each layer of preformed pipe insulation to pipe with wire or bands and tighten bands without deforming insulation materials.
2. Where vapor barriers are indicated, seal longitudinal seams, end joints, and protrusions with vapor-barrier mastic and joint sealant.
3. For insulation with factory-applied jackets on above ambient surfaces, secure laps with outward clinched staples at 6 inches o.c.
4. For insulation with factory-applied jackets on below ambient surfaces, do not staple longitudinal tabs but secure tabs with additional adhesive as recommended by insulation material manufacturer and seal with vapor-barrier mastic and flashing sealant.

B. Insulation Installation on Pipe Flanges:

1. Install preformed pipe insulation to outer diameter of pipe flange.
2. Make width of insulation section same as overall width of flange and bolts, plus twice the thickness of pipe insulation.
3. Fill voids between inner circumference of flange insulation and outer circumference of adjacent straight pipe segments with mineral-fiber blanket insulation.
4. Install jacket material with manufacturer's recommended adhesive, overlap seams at least 1 inch, and seal joints with flashing sealant.

C. Insulation Installation on Pipe Fittings and Elbows:

1. Install preformed sections of same material as straight segments of pipe insulation when available.
2. When preformed insulation elbows and fittings are not available, install mitered sections of pipe insulation, to a thickness equal to adjoining pipe insulation. Secure insulation materials with wire or bands.

D. Insulation Installation on Valves and Pipe Specialties:

1. Install preformed sections of same material as straight segments of pipe insulation when available.
2. When preformed sections are not available, install mitered sections of pipe insulation to valve body.
3. Arrange insulation to permit access to packing and to allow valve operation without disturbing insulation.
4. Install insulation to flanges as specified for flange insulation application.

E. Blanket Insulation Installation on Ducts and Plenums: Secure with adhesive and insulation pins.

1. Apply adhesives according to manufacturer's recommended coverage rates per unit area, for 50 percent coverage of duct and plenum surfaces.
2. Apply adhesive to entire circumference of ducts and to all surfaces of fittings and transitions.
3. Install either capacitor-discharge-weld pins and speed washers or cupped-head, capacitor-discharge-weld pins on sides and bottom of horizontal ducts and sides of vertical ducts as follows:

    a. On duct sides with dimensions 18 inches and smaller, place pins along longitudinal centerline of duct. Space 3 inches maximum from insulation end joints, and 16 inches o.c.
    b. On duct sides with dimensions larger than 18 inches, place pins 16 inches o.c. each way, and 3 inches maximum from insulation joints. Install additional pins to hold insulation tightly against surface at cross bracing.
    c. Pins may be omitted from top surface of horizontal, rectangular ducts and plenums.
    d. Do not overcompress insulation during installation.
    e. Impale insulation over pins and attach speed washers.
    f. Cut excess portion of pins extending beyond speed washers or bend parallel with insulation surface. Cover exposed pins and washers with tape matching insulation facing.

4. For ducts and plenums with surface temperatures below ambient, install a continuous unbroken vapor barrier. Create a facing lap for longitudinal seams and end joints with insulation by removing 2 inches (50 mm) from 1 edge and 1 end of insulation segment. Secure laps to adjacent insulation section with 1/2-inch (13-mm) outward-clinching staples, 1 inch (25 mm) o.c. Install vapor barrier consisting of factory- or field-applied jacket, adhesive, vapor-barrier mastic, and sealant at joints, seams, and protrusions.

    a. Repair punctures, tears, and penetrations with tape or mastic to maintain vapor-barrier seal.
    b. Install vapor stops for ductwork and plenums operating below 50 deg F (10 deg C) at 18-foot (5.5-m) intervals. Vapor stops shall consist of vapor-barrier mastic applied in a Z-shaped pattern over insulation face, along butt end of insulation, and over the surface. Cover insulation face and surface to be insulated a width equal to 2 times the insulation thickness but not less than 3 inches (75 mm).

5. Overlap unfaced blankets a minimum of 2 inches on longitudinal seams and end joints. At end joints, secure with steel bands spaced a maximum of 18 inches o.c.

6. Install insulation on rectangular duct elbows and transitions with a full insulation section for each surface. Install insulation on round and flat-oval duct elbows with individually mitered gores cut to fit the elbow.
7. Insulate duct stiffeners, hangers, and flanges that protrude beyond insulation surface with 6-inch- wide strips of same material used to insulate duct. Secure on alternating sides of stiffener, hanger, and flange with pins spaced 6 inches o.c.

F. Board Insulation Installation on Ducts and Plenums: Secure with adhesive and insulation pins.

1. Apply adhesives according to manufacturer's recommended coverage rates per unit area, for 50 percent coverage of duct and plenum surfaces.
2. Apply adhesive to entire circumference of ducts and to all surfaces of fittings and transitions.
3. Install either capacitor-discharge-weld pins and speed washers or cupped-head, capacitor-discharge-weld pins on sides and bottom of horizontal ducts and sides of vertical ducts as follows:

    a. On duct sides with dimensions 18 inches and smaller, place pins along longitudinal centerline of duct. Space 3 inches maximum from insulation end joints, and 16 inches o.c.
    b. On duct sides with dimensions larger than 18 inches, space pins 16 inches o.c. each way, and 3 inches maximum from insulation joints. Install additional pins to hold insulation tightly against surface at cross bracing.
    c. Pins may be omitted from top surface of horizontal, rectangular ducts and plenums.
    d. Do not overcompress insulation during installation.
    e. Cut excess portion of pins extending beyond speed washers or bend parallel with insulation surface. Cover exposed pins and washers with tape matching insulation facing.

4. For ducts and plenums with surface temperatures below ambient, install a continuous unbroken vapor barrier. Create a facing lap for longitudinal seams and end joints with insulation by removing 2 inches (50 mm) from 1 edge and 1 end of insulation segment. Secure laps to adjacent insulation section with 1/2-inch (13-mm) outward-clinching staples, 1 inch (25 mm) o.c. Install vapor barrier consisting of factory- or field-applied jacket, adhesive, vapor-barrier mastic, and sealant at joints, seams, and protrusions.

    a. Repair punctures, tears, and penetrations with tape or mastic to maintain vapor-barrier seal.
    b. Install vapor stops for ductwork and plenums operating below 50 deg F (10 deg C) at 18-foot (5.5-m) intervals. Vapor stops shall consist of vapor-barrier mastic applied in a Z-shaped pattern over insulation face, along butt end of insulation, and over the surface. Cover insulation face and surface to be insulated a width equal to 2 times the insulation thickness but not less than 3 inches (75 mm).

5. Install insulation on rectangular duct elbows and transitions with a full insulation section for each surface. Groove and score insulation to fit as closely as possible to outside and inside radius of elbows. Install insulation on round and flat-oval duct elbows with individually mitered gores cut to fit the elbow.
6. Insulate duct stiffeners, hangers, and flanges that protrude beyond insulation surface with 6-inch- wide strips of same material used to insulate duct. Secure on alternating sides of stiffener, hanger, and flange with pins spaced 6 inches o.c.

3.10 POLYOLEFIN INSULATION INSTALLATION

A. Insulation Installation on Straight Pipes and Tubes:

1. Seal split-tube longitudinal seams and end joints with manufacturer's recommended adhesive to eliminate openings in insulation that allow passage of air to surface being insulated.

B. Insulation Installation on Pipe Flanges:

1. Install pipe insulation to outer diameter of pipe flange.
2. Make width of insulation section same as overall width of flange and bolts, plus twice the thickness of pipe insulation.
3. Fill voids between inner circumference of flange insulation and outer circumference of adjacent straight pipe segments with cut sections of polyolefin sheet insulation of same thickness as pipe insulation.
4. Secure insulation to flanges and seal seams with manufacturer's recommended adhesive to eliminate openings in insulation that allow passage of air to surface being insulated.

C. Insulation Installation on Pipe Fittings and Elbows:

1. Install mitered sections of polyolefin pipe insulation.
2. Secure insulation materials and seal seams with manufacturer's recommended adhesive to eliminate openings in insulation that allow passage of air to surface being insulated.

D. Insulation Installation on Valves and Pipe Specialties:

1. Install cut sections of polyolefin pipe and sheet insulation to valve body.
2. Arrange insulation to permit access to packing and to allow valve operation without disturbing insulation.
3. Install insulation to flanges as specified for flange insulation application.
4. Secure insulation to valves and specialties, and seal seams with manufacturer's recommended adhesive to eliminate openings in insulation that allow passage of air to surface being insulated.

3.11 FIELD-APPLIED JACKET INSTALLATION

A. Where PVC jackets are indicated, install with 1-inch overlap at longitudinal seams and end joints; for horizontal applications, install with longitudinal seams along top and bottom of tanks and vessels. Seal with manufacturer's recommended adhesive.

1. Apply two continuous beads of adhesive to seams and joints, one bead under lap and the finish bead along seam and joint edge.

3.12 DUCT INSULATION SCHEDULE, GENERAL

A. Plenums and Ducts Requiring Insulation:

1. Indoor, concealed supply and outdoor air.
2. Indoor, exposed supply and outdoor air.

B. Items Not Insulated:

1. Fibrous-glass ducts.
2. Metal ducts with duct liner of sufficient thickness to comply with energy code and ASHRAE/IESNA 90.1.
3. Factory-insulated flexible ducts.
4. Factory-insulated plenums and casings.
5. Flexible connectors.
6. Vibration-control devices.
7. Factory-insulated access panels and doors.

3.13 INDOOR DUCT AND PLENUM INSULATION SCHEDULE

A. Concealed, round supply-air duct insulation shall be the following:

1. Mineral-Fiber Blanket: 1-1/2 inches thick and 0.75-lb/cu. ft. nominal density.

B. Concealed, rectangular, supply-air duct insulation shall be the following:

1. Mineral-Fiber Blanket: 1-1/2 inches thick and 0.75-lb/cu. ft. nominal density.

C. Concealed, rectangular, return-air duct insulation shall be the following:

1. Mineral-Fiber Blanket: 1-1/2 inches thick and 0.75-lb/cu. ft. nominal density.

D. Exposed, rectangular, supply-air duct insulation shall be the following:

1. Mineral-Fiber Board: 1-1/2 inches thick and 2-lb/cu. ft. nominal density.

E. Exposed, rectangular, return-air duct insulation shall be any of the following:

1. Mineral-Fiber Board: 1-1/2 inches thick and 2-lb/cu. ft. nominal density.

F. Exposed, rectangular, outdoor-air duct insulation shall be the following:

1. Mineral-Fiber Board: 1-1/2 inches thick and 2-lb/cu. ft. nominal density.

3.14 PIPING INSULATION SCHEDULE, GENERAL

A. Acceptable preformed pipe and tubular insulation materials and thicknesses are identified for each piping system and pipe size range. If more than one material is listed for a piping system, selection from materials listed is Contractor's option.

B. Items Not Insulated: Unless otherwise indicated, do not install insulation on the following:

1. Fire-suppression piping.
2. Drainage piping located in crawl spaces.
3. Below-grade piping.
4. Chrome-plated pipes and fittings unless there is a potential for personnel injury.

3.15 INDOOR PIPING INSULATION SCHEDULE

A. Domestic Cold Water:

1. NPS 3/4 and Larger: Insulation shall be any of the following:

a. Flexible Elastomeric: 1/2 inch thick.
b. Mineral-Fiber Pipe Insulation, Type I: 1/2 inch thick.
c. Polyolefin: 1/2 inch thick.

B. Domestic Hot and Recirculated Hot Water:

1. NPS 1/2 and Larger: Insulation shall be any of the following:

a. Flexible Elastomeric: 1/2 inches thick.
b. Mineral-Fiber Pipe Insulation, Type I: 1/2 inches thick.
c. Polyolefin: 1 inch thick.

C. Stormwater and Overflow:

1. All Pipe Sizes: Insulation shall be the following:

a. Mineral-Fiber Pipe Insulation, Type I: 1/2 inches thick.

D. Roof Drain and Overflow Drain Bodies:

1. All Pipe Sizes: Insulation shall be any of the following:

a. Mineral-Fiber Pipe Insulation, Type I: 1/2 inch thick.
b. Polyolefin: 1/2 inch thick.

E. Condensate and Equipment Drain Water below 60 Deg F:

1. All Pipe Sizes: Insulation shall be any of the following:

a. Flexible Elastomeric: 1/2 inches thick.
b. Mineral-Fiber Pipe Insulation, Type I: 1/2 inch thick.
c. Polyolefin: 1/2 inches thick.

F. Heating-Hot-Water Supply and Return, 200 Deg F and below:

1. NPS ½" and Larger: Insulation shall be the following:

a. Mineral-Fiber, Preformed Pipe, Type I: 1 inch thick.

END OF SECTION 15080

SECTION 15110
VALVES

PART 1 - GENERAL

1.1 RELATED DOCUMENTS

A. Drawings and general provisions of the Contract, including General and Supplementary Conditions and Division 1 Specification Sections, apply to this Section.

1.2 SUMMARY

A. This Section includes the following general-duty valves:

1. Copper-alloy ball valves.
2. Ferrous-alloy ball valves.
3. Ferrous-alloy butterfly valves.
4. Bronze check valves.
5. Gray-iron swing check valves.
6. Ferrous-alloy wafer check valves.
7. Spring-loaded, lift-disc check valves.

B. Related Sections include the following:

1. Division 15 Section "Mechanical Identification" for valve tags and charts.
2. Division 15 Section "HVAC Instrumentation and Controls" for control valves and actuators.
3. Division 15 piping Sections for specialty valves applicable to those Sections only.

1.3 DEFINITIONS

A. The following are standard abbreviations for valves:

1. CWP: Cold working pressure.
2. EPDM: Ethylene-propylene-diene terpolymer rubber.
3. PTFE: Polytetrafluoroethylene plastic.
4. SWP: Steam working pressure.

1.4 SUBMITTALS

A. Product Data: For each type of valve indicated. Include body, seating, and trim materials; valve design; pressure and temperature classifications; end connections; arrangement;

dimensions; and required clearances. Include list indicating valve and its application. Include rated capacities; shipping, installed, and operating weights; furnished specialties; and accessories.

1.5 QUALITY ASSURANCE

A. ASME Compliance: ASME B31.1 for power piping valves and ASME B31.9 for building services piping valves.

1. Exceptions: Domestic hot- and cold-water, sanitary waste, and storm drainage piping valves unless referenced.

B. ASME Compliance for Ferrous Valves: ASME B16.10 and ASME B16.34 for dimension and design criteria.

C. NSF Compliance: NSF 61 for valve materials for potable-water service.

1.6 DELIVERY, STORAGE, AND HANDLING

A. Prepare valves for shipping as follows:

1. Protect internal parts against rust and corrosion.
2. Protect threads, flange faces, grooves, and weld ends.
3. Set angle, gate, and globe valves closed to prevent rattling.
4. Set ball and plug valves open to minimize exposure of functional surfaces.
5. Set butterfly valves closed or slightly open.
6. Block check valves in either closed or open position.

B. Use the following precautions during storage:

1. Maintain valve end protection.
2. Store valves indoors and maintain at higher than ambient dew-point temperature. If outdoor storage is necessary, store valves off the ground in watertight enclosures.

C. Use sling to handle large valves; rig sling to avoid damage to exposed parts. Do not use handwheels or stems as lifting or rigging points.

PART 2 - PRODUCTS

2.1 MANUFACTURERS

A. In other Part 2 articles where subparagraph titles below introduce lists, the following requirements apply for product selection:

1. Manufacturers: Subject to compliance with requirements, provide products by the manufacturers specified.

2.2 VALVES, GENERAL

A. Refer to Part 3 "Valve Applications" Article for applications of valves.

B. Bronze Valves: NPS 2 and smaller with threaded ends, unless otherwise indicated.

C. Ferrous Valves: NPS 2-1/2 and larger with flanged ends, unless otherwise indicated.

D. Valve Pressure and Temperature Ratings: Not less than indicated and as required for system pressures and temperatures.

E. Valve Sizes: Same as upstream pipe, unless otherwise indicated.

F. Valve Actuators:

1. Chainwheel: For attachment to valves, of size and mounting height, as indicated in the "Valve Installation" Article in Part 3.
2. Gear Drive: For quarter-turn valves NPS 8 and larger.
3. Handwheel: For valves other than quarter-turn types.
4. Lever Handle: For quarter-turn valves NPS 6 and smaller, except plug valves.
5. Wrench: For plug valves with square heads. Furnish Owner with 1 wrench for every 10 plug valves, for each size square plug head.

G. Extended Valve Stems: On insulated valves.

H. Valve Flanges: ASME B16.1 for cast-iron valves, ASME B16.5 for steel valves, and ASME B16.24 for bronze valves.

I. Valve Grooved Ends: AWWA C606.

1. Solder Joint: With sockets according to ASME B16.18.

a. Caution: Use solder with melting point below 840 deg F for angle, check, gate, and globe valves; below 421 deg F for ball valves.

2. Threaded: With threads according to ASME B1.20.1.

J. Valve Bypass and Drain Connections: MSS SP-45.

2.3 COPPER-ALLOY BALL VALVES

A. Manufacturers:

1. Two-Piece, Copper-Alloy Ball Valves:

a. Conbraco Industries, Inc.; Apollo Div.
b. Crane Co.; Crane Valve Group; Crane Valves.
c. Crane Co.; Crane Valve Group; Jenkins Valves.
d. Crane Co.; Crane Valve Group; Stockham Div.
e. Grinnell Corporation.
f. Hammond Valve.

g. Jamesbury, Inc.
h. Kitz Corporation of America.
i. Legend Valve & Fitting, Inc.
j. Milwaukee Valve Company.
k. NIBCO INC.
l. Red-White Valve Corp.
m. Watts Industries, Inc.; Water Products Div.

B. Copper-Alloy Ball Valves, General: MSS SP-110.

C. Two-Piece, Copper-Alloy Ball Valves: Brass or bronze body with full-port, chrome-plated bronze ball; PTFE or TFE seats; and 600-psig minimum CWP rating and blowout-proof stem.

2.4 FERROUS-ALLOY BUTTERFLY VALVES

A. Manufacturers:

1. Flangeless, Ferrous-Alloy Butterfly Valves:

a. Crane Co.; Crane Valve Group; Center Line.
b. Crane Co.; Crane Valve Group; Stockham Div.
c. Grinnell Corporation.
d. Hammond Valve.
e. Kitz Corporation of America.
f. Legend Valve & Fitting, Inc.
g. Metraflex Co.
h. Milwaukee Valve Company.
i. Mueller Steam Specialty.
j. NIBCO INC.
k. Red-White Valve Corp.
l. Watts Industries, Inc.; Water Products Div.

2. Grooved-End, Ductile-Iron Butterfly Valves:

a. Central Sprinkler Co.; Central Grooved Piping Products.
b. Grinnell Corporation.
c. Hammond Valve.
d. McWane, Inc.; Kennedy Valve Div.
e. Milwaukee Valve Company.
f. Mueller Steam Specialty.
g. NIBCO INC.
h. Victaulic Co. of America.

B. Ferrous-Alloy Butterfly Valves, General: MSS SP-67, Type I, for tight shutoff, with disc and lining suitable for potable water, unless otherwise indicated.

C. Flangeless, 150-psig CWP Rating, Ferrous-Alloy Butterfly Valves: Wafer type with one- or two-piece stem.

D. Single-Flange, 150-psig CWP Rating, Ferrous-Alloy Butterfly Valves: Wafer-lug type with one- or two-piece stem.

E. Grooved-End, 175-psig CWP Rating, Ferrous-Alloy Butterfly Valves: Ductile-iron or steel body with grooved or shouldered ends.

2.5 BRONZE CHECK VALVES

A. Manufacturers:

1. Type 4, Bronze, Swing Check Valves with Nonmetallic Disc:

a. Crane Co.; Crane Valve Group; Crane Valves.
b. Crane Co.; Crane Valve Group; Jenkins Valves.
c. Crane Co.; Crane Valve Group; Stockham Div.
d. Grinnell Corporation.
e. Hammond Valve.
f. McWane, Inc.; Kennedy Valve Div.
g. Milwaukee Valve Company.
h. NIBCO INC.
i. Red-White Valve Corp.
j. Walworth Co.
k. Watts Industries, Inc.; Water Products Div.

B. Bronze Check Valves, General: MSS SP-80.

C. Type 1, Class 125, Bronze, Horizontal Lift Check Valves: Bronze body with bronze disc and seat.

D. Type 4, Class 125, Bronze, Swing Check Valves: Bronze body with nonmetallic disc and bronze seat.

2.6 GRAY-IRON SWING CHECK VALVES

A. Manufacturers:

1. Grooved-End, Ductile-Iron Swing Check Valves:

a. Grinnell Corporation.
b. Mueller Co.
c. Victaulic Co. of America.

B. 175-psig CWP Rating, Grooved-End, Swing Check Valves: Ductile-iron body with grooved or shouldered ends.

2.7 FERROUS-ALLOY WAFER CHECK VALVES

A. Ferrous-Alloy Wafer Check Valves, General: API 594, spring loaded.

B. Dual-Plate, Class 125 or 150, Ferrous-Alloy, Wafer Check Valves: Flangeless body.

2.8 SPRING-LOADED, LIFT-DISC CHECK VALVES

A. Manufacturers:

1. Type I, Wafer Lift-Disc Check Valves:

    a. Mueller Steam Specialty.

2. Type II, Compact-Wafer, Lift-Disc Check Valves:

    a. Grinnell Corporation.
    b. Hammond Valve.
    c. Metraflex Co.
    d. Milwaukee Valve Company.
    e. Mueller Steam Specialty.
    f. NIBCO INC.
    g. Val-Matic Valve & Mfg. Corp.

3. Type IV, Threaded Lift-Disc Check Valves:

    a. Grinnell Corporation.
    b. Legend Valve & Fitting, Inc.
    c. Metraflex Co.
    d. Milwaukee Valve Company.
    e. Mueller Steam Specialty.
    f. NIBCO INC.
    g. Watts Industries, Inc.; Water Products Div.

B. Lift-Disc Check Valves, General: FCI 74-1, with spring-loaded bronze or alloy disc and bronze or alloy seat.

C. Type I, Class 125, Wafer Lift-Disc Check Valves: Wafer style with cast-iron shell with diameter matching companion flanges.

D. Type II, Class 125, Compact-Wafer, Lift-Disc Check Valves: Compact-wafer style with cast-iron shell with diameter made to fit within bolt circle.

E. Type IV, Class 125, Threaded Lift-Disc Check Valves: Threaded style with bronze shell and threaded ends.

F. Type IV, Class 150, Threaded Lift-Disc Check Valves: Threaded style with bronze shell and threaded ends.

PART 3 - EXECUTION

3.1 EXAMINATION

A. Examine piping system for compliance with requirements for installation tolerances and other conditions affecting performance.

1. Proceed with installation only after unsatisfactory conditions have been corrected.

B. Examine valve interior for cleanliness, freedom from foreign matter, and corrosion. Remove special packing materials, such as blocks, used to prevent disc movement during shipping and handling.

C. Operate valves in positions from fully open to fully closed. Examine guides and seats made accessible by such operations.

D. Examine threads on valve and mating pipe for form and cleanliness.

E. Examine mating flange faces for conditions that might cause leakage. Check bolting for proper size, length, and material. Verify that gasket is of proper size, that its material composition is suitable for service, and that it is free from defects and damage.

F. Do not attempt to repair defective valves; replace with new valves.

3.2 VALVE APPLICATIONS

A. Refer to piping Sections for specific valve applications. If valve applications are not indicated, use the following:

1. Shutoff Service: Ball or butterfly valves.
2. Throttling Service: Ball or butterfly valves.
3. Pump Discharge: Spring-loaded, lift-disc check valves.

B. If valves with specified SWP classes or CWP ratings are not available, the same types of valves with higher SWP class or CWP ratings may be substituted.

C. Domestic Water Piping: Use the following types of valves:

1. Ball Valves, NPS 2 and Smaller: Two-piece, 600-psig CWP rating, copper alloy.
2. Butterfly Valves, NPS 2-1/2 and Larger: Flangeless or Single-flange, 150-psig CWP rating, ferrous alloy, with EPDM liner.
3. Grooved-End, Ductile-Iron Butterfly Valves, NPS 2-1/2 and Larger: 175-psig CWP rating.
4. Swing Check Valves, NPS 2 and Smaller: Type 4, Class 125, bronze.
5. Grooved-End, Ductile-Iron, Swing Check Valves, NPS 2-1/2 and Larger: 175-psig CWP rating.
6. Wafer Check Valves, NPS 2-1/2 and Larger: Dual-plate, wafer double-flanged, Class 125 or 150, ferrous alloy.

7. Spring-Loaded, Lift-Disc Check Valves, NPS 2 and Smaller: Type IV, Class 125 minimum.

D. Heating Water Piping: Use the following types of valves:

1. Ball Valves, NPS 2 and Smaller: Two-piece, 600-psig CWP rating, copper alloy.
2. Butterfly Valves, NPS 2-1/2 and Larger: Flangeless or Single-flange, 150-psig CWP rating, ferrous alloy, with EPDM liner.
3. Grooved-End, Ductile-Iron Butterfly Valves, NPS 2-1/2 and Larger: 175-psig CWP rating.
4. Spring-Loaded, Lift-Disc Check Valves, NPS 2 and Smaller: Type IV, Class 125 minimum.

E. Select valves, except wafer and flangeless types, with the following end connections:

1. For Copper Tubing, NPS 2 and Smaller: Solder-joint or threaded ends, except provide valves with threaded ends for condenser water, heating hot water, steam, and steam condensate services.
2. For Copper Tubing, NPS 2-1/2 to NPS 4: Flanged or threaded ends.
3. For Steel Piping, NPS 2 and Smaller: Threaded ends.
4. For Steel Piping, NPS 2-1/2 to NPS 4: Flanged or threaded ends.
5. For Steel Piping, NPS 5 and Larger: Flanged ends.
6. For Grooved-End, Copper Tubing and Steel Piping: Valve ends may be grooved.

3.3 VALVE INSTALLATION

A. Piping installation requirements are specified in other Division 15 Sections. Drawings indicate general arrangement of piping, fittings, and specialties.

B. Install valves with unions or flanges at each piece of equipment arranged to allow service, maintenance, and equipment removal without system shutdown.

C. Locate valves for easy access and provide separate support where necessary.

D. Install valves in horizontal piping with stem at or above center of pipe.

E. Install valves in position to allow full stem movement.

F. Install check valves for proper direction of flow and as follows:

1. Swing Check Valves: In horizontal position with hinge pin level.
2. Dual-Plate Check Valves: In horizontal or vertical position, between flanges.
3. Lift Check Valves: With stem upright and plumb.

3.4 JOINT CONSTRUCTION

A. Refer to Division 15 Section "Basic Mechanical Materials and Methods" for basic piping joint construction.

B. Grooved Joints: Assemble joints with keyed coupling housing, gasket, lubricant, and bolts according to coupling and fitting manufacturer's written instructions.

C. Soldered Joints: Use ASTM B 813, water-flushable, lead-free flux; ASTM B 32, lead-free-alloy solder; and ASTM B 828 procedure, unless otherwise indicated.

3.5 ADJUSTING

A. Adjust or replace valve packing after piping systems have been tested and put into service but before final adjusting and balancing. Replace valves if persistent leaking occurs.

END OF SECTION 15110

SECTION 15127
METERS AND GAGES FOR HVAC PIPING

PART 1 - GENERAL

1.1 RELATED DOCUMENTS

A. Drawings and general provisions of the Contract, including General and Supplementary Conditions and Division 1 Specification Sections, apply to this Section.

1.2 SUMMARY

A. Section Includes:

1. Thermometers.
2. Gages.
3. Test plugs.

1.3 DEFINITIONS

A. CR: Chlorosulfonated polyethylene synthetic rubber.

B. EPDM: Ethylene-propylene-diene terpolymer rubber.

1.4 SUBMITTALS

A. Product Data: For each type of product indicated; include performance curves.

B. Product Certificates: For each type of thermometer and gage, signed by product manufacturer.

PART 2 - PRODUCTS

2.1 METAL-CASE, LIQUID-IN-GLASS THERMOMETERS

A. Manufacturers: Subject to compliance with requirements, provide products by one of the following:

1. Palmer - Wahl Instruments Inc.
2. Trerice, H. O. Co.

3. Weiss Instruments, Inc.
4. Weksler Instruments Operating Unit; Dresser Industries; Instrument Div.

B. Case: Die-cast aluminum or brass, 7 inches long.

C. Tube: Red or blue reading, organic-liquid filled, with magnifying lens.

D. Tube Background: Satin-faced, nonreflective aluminum with permanently etched scale markings.

E. Window: Glass.

F. Connector: Adjustable type, 180 degrees in vertical plane, 360 degrees in horizontal plane, with locking device.

G. Stem: Copper-plated steel, aluminum, or brass for thermowell installation and of length to suit installation.

H. Accuracy: Plus or minus 1 percent of range or plus or minus 1 scale division to maximum of 1.5 percent of range.

2.2 THERMOWELLS

A. Manufacturers: Same as manufacturer of thermometer being used.

B. Description: Pressure-tight, socket-type metal fitting made for insertion into piping and of type, diameter, and length required to hold thermometer.

2.3 PRESSURE GAGES

A. Manufacturers: Subject to compliance with requirements, provide products by one of the following:

1. Ashcroft Commercial Instrument Operations; Dresser Industries; Instrument Div.
2. Ernst Gage Co.
3. Eugene Ernst Products Co.
4. Marsh Bellofram.
5. Miljoco Corp.
6. Palmer - Wahl Instruments Inc.
7. Trerice, H. O. Co.
8. Weiss Instruments, Inc.
9. Weksler Instruments Operating Unit; Dresser Industries; Instrument Div.

B. Direct-Mounting, Dial-Type Pressure Gages: Indicating-dial type complying with ASME B40.100.

1. Case: Liquid-filled type, drawn steel or cast aluminum, 4-1/2-inch diameter.
2. Pressure-Element Assembly: Bourdon tube, unless otherwise indicated.
3. Pressure Connection: Brass, NPS 1/4, bottom-outlet type unless back-outlet type is indicated.

4. Movement: Mechanical, with link to pressure element and connection to pointer.
5. Dial: Satin-faced, nonreflective aluminum with permanently etched scale markings.
6. Pointer: Red or other dark-color metal.
7. Window: Glass.
8. Ring: Metal.
9. Accuracy: Grade A, plus or minus 1 percent of middle half scale.
10. Vacuum-Pressure Range: 30-in. Hg of vacuum to 15 psig of pressure.
11. Range for Fluids under Pressure: Two times operating pressure.

C. Pressure-Gage Fittings:

1. Valves: NPS 1/4 brass or stainless-steel needle type.
2. Snubbers: ASME B40.5, NPS 1/4 brass bushing with corrosion-resistant, porous-metal disc of material suitable for system fluid and working pressure.

2.4 TEST PLUGS

A. Manufacturers: Subject to compliance with requirements, provide products by one of the following:

1. Flow Design, Inc.
2. MG Piping Products Co.
3. National Meter, Inc.
4. Peterson Equipment Co., Inc.
5. Sisco Manufacturing Co.
6. Trerice, H. O. Co.
7. Watts Industries, Inc.; Water Products Div.

B. Description: Corrosion-resistant brass or stainless-steel body with core inserts and gasketed and threaded cap, with extended stem for units to be installed in insulated piping.

C. Minimum Pressure and Temperature Rating: 500 psig at 200 deg F.

D. Core Inserts: One or two self-sealing rubber valves.

1. Insert material for air, water, oil, or gas service at 20 to 200 deg F shall be CR.
2. Insert material for air or water service at minus 30 to plus 275 deg F shall be EPDM.

PART 3 - EXECUTION

3.1 THERMOMETER APPLICATIONS

A. Install liquid-in-glass thermometers in the following locations:

1. Inlet and outlet of each hydronic zone.
2. Inlet and outlet of each hydronic boiler.
3. Inlet and outlet of each hydronic coil in air-handling units and built-up central systems.
4. Inlet and outlet of each hydronic heat exchanger.
5. Inlet and outlet of each hydronic heat-recovery unit.

B. Provide the following temperature ranges for thermometers:

1. Heating Hot Water: 30 to 240 deg F, with 2-degree scale divisions.
2. Condenser Water: 0 to 160 deg F, with 2-degree scale divisions.
3. Chilled Water: 0 to 100 deg F, with 2-degree scale divisions.

3.2 GAGE APPLICATIONS

A. Install dry-case-type pressure gages for discharge of each pressure-reducing valve.

B. Install liquid-filled-case-type pressure gages at suction and discharge of each pump.

3.3 INSTALLATIONS

A. Install direct-mounting thermometers and adjust vertical and tilted positions.

B. Install thermowells with socket extending to center of pipe and in vertical position in piping tees where thermometers are indicated.

C. Install direct-mounting pressure gages in piping tees with pressure gage located on pipe at most readable position.

D. Install needle-valve and snubber fitting in piping for each pressure gage for fluids.

E. Install test plugs in tees in piping.

3.4 CONNECTIONS

A. Install gages adjacent to machines and equipment to allow service and maintenance for meters, gages, machines, and equipment.

3.5 ADJUSTING

A. Calibrate meters according to manufacturer's written instructions, after installation.

B. Adjust faces of meters and gages to proper angle for best visibility.

END OF SECTION 15127

SECTION 15140
DOMESTIC WATER PIPING

PART 1 - GENERAL

1.1 RELATED DOCUMENTS

A. Drawings and general provisions of the Contract, including General and Supplementary Conditions and Division 1 Specification Sections, apply to this Section.

1.2 SUMMARY

A. This Section includes domestic water piping inside the building.

B. Related Sections include the following:

1. Division 15 Section "Meters and Gages" for thermometers, pressure gages, and fittings.
2. Division 15 Section "Plumbing Specialties" for water distribution piping specialties.

1.3 PERFORMANCE REQUIREMENTS

A. Provide components and installation capable of producing domestic water piping systems with 125 psig, unless otherwise indicated.

1.4 SUBMITTALS

A. Product Data: For pipe, tube, fittings, and couplings.

B. Field quality-control test reports.

1.5 QUALITY ASSURANCE

A. Piping materials shall bear label, stamp, or other markings of specified testing agency.

B. Comply with NSF 61, "Drinking Water System Components - Health Effects; Sections 1 through 9," for potable domestic water piping and components.

PART 2 - PRODUCTS

2.1 MANUFACTURERS

A. In other Part 2 articles where titles below introduce lists, the following requirements apply to product selection:

1. Manufacturers: Subject to compliance with requirements, provide products by one of the manufacturers specified.

2.2 PIPING MATERIALS

A. Refer to Part 3 "Pipe and Fitting Applications" Article for applications of pipe, tube, fitting, and joining materials.

B. Transition Couplings for Aboveground Pressure Piping: Coupling or other manufactured fitting the same size as, with pressure rating at least equal to and ends compatible with, piping to be joined.

2.3 COPPER TUBE AND FITTINGS

A. Hard Copper Tube: ASTM B 88, Types L and M, water tube, drawn temper.

1. Copper Pressure Fittings: ASME B16.18, cast-copper-alloy or ASME B16.22, wrought-copper, solder-joint fittings. Furnish wrought-copper fittings if indicated.
2. Bronze Flanges: ASME B16.24, Class 150, with solder-joint ends. Furnish Class 300 flanges if required to match piping.
3. Copper Unions: MSS SP-123, cast-copper-alloy, hexagonal-stock body, with ball-and-socket, metal-to-metal seating surfaces, and solder-joint or threaded ends.

2.4 VALVES

A. Bronze and cast-iron, general-duty valves are specified in Division 15 Section "Valves."

B. Balancing and drain valves are specified in Division 15 Section "Plumbing Specialties."

PART 3 - EXECUTION

3.1 PIPE AND FITTING APPLICATIONS

A. Transition and special fittings with pressure ratings at least equal to piping rating may be used in applications below, unless otherwise indicated.

B. Flanges may be used on aboveground piping, unless otherwise indicated.

C. Fitting Option: Extruded-tee connections and brazed joints may be used on aboveground copper tubing.

D. Under-Building-Slab, Domestic Water Piping on House Side of Water Meter, NPS 4 and Smaller: Soft copper tube, Type L; copper pressure fittings; and soldered joints.

E. Aboveground Domestic Water Piping: Use any of the following piping materials for each size range:

1. NPS 1 and Smaller: Hard copper tube, Type L; copper pressure fittings; and soldered joints.
2. NPS 1-1/4 and NPS 1-1/2: Hard copper tube, Type L; copper pressure fittings; and soldered joints.
3. NPS 2: Hard copper tube, Type L; copper pressure fittings; and soldered joints.

3.2 VALVE APPLICATIONS

A. Drawings indicate valve types to be used. Where specific valve types are not indicated, the following requirements apply:

1. Shutoff Duty: Use bronze ball valves for piping NPS 2 and smaller. Use cast-iron butterfly valves with flanged ends for piping NPS 2-1/2 and larger.
2. Throttling Duty: Use bronze ball or globe valves for piping NPS 2 and smaller. Use cast-iron butterfly valves with flanged ends for piping NPS 2-1/2 and larger.
3. Hot-Water-Piping, Balancing Duty: Calibrated balancing valves.
4. Drain Duty: Hose-end drain valves.

B. Install shutoff valve close to water main on each branch and riser serving plumbing fixtures or equipment, on each water supply to equipment, and on each water supply to plumbing fixtures that do not have supply stops. Use ball valves for piping NPS 2 and smaller. Use butterfly valves for piping NPS 2-1/2 and larger.

C. Install drain valves for equipment at base of each water riser, at low points in horizontal piping, and where required to drain water piping.

1. Install hose-end drain valves at low points in water mains, risers, and branches.
2. Install stop-and-waste drain valves where indicated.

D. Install balancing valve in each hot-water circulation return branch and discharge side of each pump and circulator. Set balancing valves partly open to restrict but not stop flow. Use ball valves for piping NPS 2 and smaller and butterfly valves for piping NPS 2-1/2 and larger. Balancing valves are specified in Division 15 Section "Plumbing Specialties."

E. Install calibrated balancing valves in each hot-water circulation return branch and discharge side of each pump and circulator. Set calibrated balancing valves partly open to restrict but not stop flow. Calibrated balancing valves are specified in Division 15 Section "Plumbing Specialties."

3.3 PIPING INSTALLATION

A. Basic piping installation requirements are specified in Division 15 Section "Basic Mechanical Materials and Methods."

B. Install under-building-slab copper tubing according to CDA's "Copper Tube Handbook."

C. Install wall penetration system at each service pipe penetration through foundation wall. Make installation watertight. Wall penetration systems are specified in Division 15 Section "Basic Mechanical Materials and Methods."

D. Install domestic water piping level and plumb.

3.4 JOINT CONSTRUCTION

A. Basic piping joint construction requirements are specified in Division 15 Section "Basic Mechanical Materials and Methods."

B. Soldered Joints: Use ASTM B 813, water-flushable, lead-free flux; ASTM B 32, lead-free-alloy solder; and ASTM B 828 procedure, unless otherwise indicated.

3.5 HANGER AND SUPPORT INSTALLATION

A. Pipe hanger and support devices are specified in Division 15 Section "Hangers and Supports." Install the following:

1. Vertical Piping: MSS Type 8 or Type 42, clamps.
2. Individual, Straight, Horizontal Piping Runs: According to the following:

    a. 100 Feet and Less: MSS Type 1, adjustable, steel clevis hangers.
    b. Longer Than 100 Feet: MSS Type 43, adjustable roller hangers.
    c. Longer Than 100 Feet: MSS Type 49, spring cushion rolls, if indicated.

3. Multiple, Straight, Horizontal Piping Runs 100 Feet or Longer: MSS Type 44, pipe rolls. Support pipe rolls on trapeze.
4. Base of Vertical Piping: MSS Type 52, spring hangers.

B. Install supports according to Division 15 Section "Hangers and Supports."

C. Support vertical piping and tubing at base and at each floor.

D. Rod diameter may be reduced 1 size for double-rod hangers, to a minimum of 3/8 inch.

E. Install hangers for copper tubing with the following maximum horizontal spacing and minimum rod diameters:

1. NPS 3/4 and Smaller: 60 inches with 3/8-inch rod.
2. NPS 1 and NPS 1-1/4: 72 inches with 3/8-inch rod.
3. NPS 1-1/2 and NPS 2: 96 inches with 3/8-inch rod.

F. Install supports for vertical copper tubing every 10 feet.

G. Support piping and tubing not listed above according to MSS SP-69 and manufacturer's written instructions.

3.6 CONNECTIONS

A. Drawings indicate general arrangement of piping, fittings, and specialties.

B. Install piping adjacent to equipment and machines to allow service and maintenance.

C. Connect domestic water piping to exterior water-service piping. Use transition fitting to join dissimilar piping materials.

3.7 FIELD QUALITY CONTROL

A. Inspect domestic water piping as follows:

1. Do not enclose, cover, or put piping into operation until it has been inspected and approved by authorities having jurisdiction.
2. During installation, notify authorities having jurisdiction at least 24 hours before inspection must be made. Perform tests specified below in presence of authorities having jurisdiction:

    a. Roughing-in Inspection: Arrange for inspection of piping before concealing or closing-in after roughing-in and before setting fixtures.
    b. Final Inspection: Arrange final inspection for authorities having jurisdiction to observe tests specified below and to ensure compliance with requirements.

3. Reinspection: If authorities having jurisdiction find that piping will not pass test or inspection, make required corrections and arrange for reinspection.
4. Reports: Prepare inspection reports and have them signed by authorities having jurisdiction.

B. Test domestic water piping as follows:

1. Fill domestic water piping. Check components to determine that they are not air bound and that piping is full of water.
2. Test for leaks and defects in new piping and parts of existing piping that have been altered, extended, or repaired. If testing is performed in segments, submit separate report for each test, complete with diagram of portion of piping tested.
3. Leave new, altered, extended, or replaced domestic water piping uncovered and unconcealed until it has been tested and approved. Expose work that was covered or concealed before it was tested.
4. Cap and subject piping to static water pressure of 50 psig above operating pressure, without exceeding pressure rating of piping system materials. Isolate test source and allow to stand for four hours. Leaks and loss in test pressure constitute defects that must be repaired.

5. Repair leaks and defects with new materials and retest piping or portion thereof until satisfactory results are obtained.
6. Prepare reports for tests and required corrective action.

3.8 ADJUSTING

A. Perform the following adjustments before operation:

1. Close drain valves, hydrants, and hose bibbs.
2. Open shutoff valves to fully open position.
3. Open throttling valves to proper setting.
4. Adjust balancing valves in hot-water-circulation return piping to provide adequate flow.

    a. Manually adjust ball-type balancing valves in hot-water-circulation return piping to provide flow of hot water in each branch.
    b. Adjust calibrated balancing valves to flows indicated.

5. Remove plugs used during testing of piping and plugs used for temporary sealing of piping during installation.
6. Remove and clean strainer screens. Close drain valves and replace drain plugs.
7. Remove filter cartridges from housings and verify that cartridges are as specified for application where used and are clean and ready for use.
8. Check plumbing specialties and verify proper settings, adjustments, and operation.

3.9 CLEANING

A. Clean and disinfect potable domestic water piping as follows:

1. Purge new piping and parts of existing domestic water piping that have been altered, extended, or repaired before using.
2. Use purging and disinfecting procedures prescribed by authorities having jurisdiction or, if methods are not prescribed, procedures described in either AWWA C651 or AWWA C652 or as described below:

    a. Flush piping system with clean, potable water until dirty water does not appear at outlets.
    b. Fill and isolate system according to either of the following:

        1) Fill system or part thereof with water/chlorine solution with at least 50 ppm of chlorine. Isolate with valves and allow to stand for 24 hours.
        2) Fill system or part thereof with water/chlorine solution with at least 200 ppm of chlorine. Isolate and allow to stand for three hours.

    c. Flush system with clean, potable water until no chlorine is in water coming from system after the standing time.
    d. Submit water samples in sterile bottles to authorities having jurisdiction. Repeat procedures if biological examination shows contamination.

B. Prepare and submit reports of purging and disinfecting activities.

C. Clean interior of domestic water piping system. Remove dirt and debris as work progresses.

END OF SECTION 15140

SECTION 15145
DOMESTIC WATER PIPING SPECIALTIES

PART 1 - GENERAL

1.1 RELATED DOCUMENTS

A. Drawings and general provisions of the Contract, including General and Supplementary Conditions and Division 1 Specification Sections, apply to this Section.

1.2 SUMMARY

A. This Section includes the following domestic water piping specialties:

1. Balancing valves.
2. Temperature-actuated water mixing valves.
3. Drain valves.
4. Water hammer arresters.

B. Related Sections include the following:

1. Division 15 Section "Meters and Gages" for thermometers, pressure gages, and flow meters in domestic water piping.
2. Division 15 Section "Domestic Water Piping" for water meters.
3. Division 15 Section "Drinking Fountains and Water Coolers" for water filters for water coolers.

1.3 PERFORMANCE REQUIREMENTS

A. Minimum Working Pressure for Domestic Water Piping Specialties: 125 psig, unless otherwise indicated.

1.4 SUBMITTALS

A. Product Data: For each type of product indicated.

B. Operation and Maintenance Data: For domestic water piping specialties to include in emergency, operation, and maintenance manuals.

1.5 QUALITY ASSURANCE

A. NSF Compliance:

1. Comply with NSF 14, "Plastics Piping Components and Related Materials," for plastic domestic water piping components.
2. Comply with NSF 61, "Drinking Water System Components - Health Effects; Sections 1 through 9."

PART 2 - PRODUCTS

2.1 BALANCING VALVES

A. Copper-Alloy Calibrated Balancing Valves:

1. Manufacturers: Subject to compliance with requirements, provide products by one of the following:

a. Armstrong International, Inc.
b. ITT Industries; Bell & Gossett Div.
c. NIBCO INC.
d. TAC Americas.
e. Watts Industries, Inc.; Water Products Div.

2. Type: Ball valve with two readout ports and memory setting indicator.
3. Body: Brass or bronze.
4. Size: Same as connected piping, but not larger than NPS 2.

2.2 TEMPERATURE-ACTUATED WATER MIXING VALVES

A. Individual-Fixture, Water Tempering Valves:

1. Manufacturers: Subject to compliance with requirements, provide products by one of the following:

a. Conbraco Industries, Inc.
b. Lawler Manufacturing Company, Inc.
c. Leonard Valve Company.
d. Powers; a Watts Industries Co.
e. Watts Industries, Inc.; Water Products Div.
f. Zurn Plumbing Products Group; Wilkins Div.

2. Standard: ASSE 1016, thermostatically controlled water tempering valve.
3. Pressure Rating: 125 psig minimum, unless otherwise indicated.
4. Body: Bronze body with corrosion-resistant interior components.
5. Temperature Control: Adjustable.
6. Inlets and Outlet: Threaded.
7. Finish: Rough or chrome-plated bronze.

8. Tempered-Water Setting: 105 deg F.
9. Tempered-Water Design Flow Rate: See faucet for flow requirements.

2.3 DRAIN VALVES

A. Ball-Valve-Type, Hose-End Drain Valves:

1. Standard: MSS SP-110 for standard-port, two-piece ball valves.
2. Pressure Rating: 400-psig minimum CWP.
3. Size: NPS 3/4.
4. Body: Copper alloy.
5. Ball: Chrome-plated brass.
6. Seats and Seals: Replaceable.
7. Handle: Vinyl-covered steel.
8. Inlet: Threaded or solder joint.
9. Outlet: Threaded, short nipple with garden-hose thread complying with ASME B1.20.7 and cap with brass chain.

2.4 WATER HAMMER ARRESTERS

A. Water Hammer Arresters:

1. Manufacturers: Subject to compliance with requirements, provide products by one of the following:

   a. AMTROL, Inc.
   b. Josam Company.
   c. MIFAB, Inc.
   d. PPP Inc.
   e. Sioux Chief Manufacturing Company, Inc.
   f. Smith, Jay R. Mfg. Co.; Division of Smith Industries, Inc.
   g. Tyler Pipe; Wade Div.
   h. Watts Drainage Products Inc.
   i. Zurn Plumbing Products Group; Specification Drainage Operation.

2. Standard: ASSE 1010 or PDI-WH 201.
3. Type: Metal bellows.
4. Size: ASSE 1010, Sizes AA and A through F or PDI-WH 201, Sizes A through F.

PART 3 - EXECUTION

3.1 INSTALLATION

A. Refer to Division 15 Section "Basic Mechanical Materials and Methods" for piping joining materials, joint construction, and basic installation requirements.

B. Install balancing valves in locations where they can easily be adjusted.

C. Install temperature-actuated water mixing valves with check stops or shutoff valves on inlets and with shutoff valve on outlet.

D. Install water hammer arresters in water piping according to PDI-WH 201.

3.2 CONNECTIONS

A. Piping installation requirements are specified in other Division 15 Sections. Drawings indicate general arrangement of piping and specialties.

3.3 LABELING AND IDENTIFYING

A. Equipment Nameplates and Signs: Install engraved plastic-laminate equipment nameplate or sign on or near each of the following:

1. Calibrated balancing valves.

B. Distinguish among multiple units, inform operator of operational requirements, indicate safety and emergency precautions, and warn of hazards and improper operations, in addition to identifying unit. Nameplates and signs are specified in Division 15 Section "Mechanical Identification."

3.4 ADJUSTING

A. Set field-adjustable flow set points of balancing valves.

B. Set field-adjustable temperature set points of temperature-actuated water mixing valves.

END OF SECTION 15145

SECTION 15150
SANITARY WASTE AND VENT PIPING

PART 1 - GENERAL

1.1 RELATED DOCUMENTS

A. Drawings and general provisions of the Contract, including General and Supplementary Conditions and Division 1 Specification Sections, apply to this Section.

1.2 SUMMARY

A. This Section includes the following for soil, waste, and vent piping inside the building:

1. Pipe, tube, and fittings.

1.3 DEFINITIONS

A. PVC: Polyvinyl chloride plastic.

1.4 PERFORMANCE REQUIREMENTS

A. Components and installation shall be capable of withstanding the following minimum working pressure, unless otherwise indicated:

1. Soil, Waste, and Vent Piping: 10-foot head of water.

1.5 SUBMITTALS

A. Product Data: For pipe, tube, fittings, and couplings.

1.6 QUALITY ASSURANCE

A. Piping materials shall bear label, stamp, or other markings of specified testing agency.

B. Comply with NSF 14, "Plastics Piping Systems Components and Related Materials," for plastic piping components. Include marking with "NSF-dwv" for plastic drain, waste, and vent piping; "NSF-drain" for plastic drain piping; "NSF-tubular" for plastic continuous waste piping; and "NSF-sewer" for plastic sewer piping.

PART 2 - PRODUCTS

2.1 MANUFACTURERS

A. In other Part 2 articles where titles below introduce lists, the following requirements apply to product selection:

1. Manufacturers: Subject to compliance with requirements, provide products by one of the manufacturers specified.

2.2 PIPING MATERIALS

A. Refer to Part 3 "Piping Applications" Article for applications of pipe, tube, fitting, and joining materials.

2.3 HUBLESS CAST-IRON SOIL PIPE AND FITTINGS

A. Pipe and Fittings: ASTM A 888 or CISPI 301.

B. Sovent Stack Fittings: ASME B16.45 or ASSE 1043, hubless, cast-iron aerator and deaerator drainage fittings.

C. Shielded Couplings: ASTM C 1277 assembly of metal shield or housing, corrosion-resistant fasteners, and rubber sleeve with integral, center pipe stop.

1. Standard, Shielded, Stainless-Steel Couplings: CISPI 310, with stainless-steel corrugated shield; stainless-steel bands and tightening devices; and ASTM C 564, rubber sleeve.

a. Manufacturers:

1) ANACO.
2) Fernco, Inc.
3) Ideal Div.; Stant Corp.
4) Mission Rubber Co.
5) Tyler Pipe; Soil Pipe Div.

2.4 PVC PIPE AND FITTINGS

A. Solid-Wall PVC Pipe: ASTM D 2665, drain, waste, and vent.

1. PVC Socket Fittings: ASTM D 2665, socket type, made to ASTM D 3311, drain, waste, and vent patterns.

2.5 COPPER TUBE AND FITTINGS

A. Copper DWV Tube: ASTM B 306, drainage tube, drawn temper.

1. Copper Drainage Fittings: ASME B16.23, cast copper or ASME B16.29, wrought copper, solder-joint fittings.

PART 3 - EXECUTION

3.1 EXCAVATION

A. Refer to Division 2 Section "Earthwork" for excavating, trenching, and backfilling.

3.2 PIPING APPLICATIONS

A. Aboveground, soil and waste piping NPS 4 and smaller shall be the following:

1. Hubless cast-iron soil pipe and fittings; standard, shielded, stainless-steel couplings; and hubless-coupling joints.
2. Copper DWV tube, copper drainage fittings and soldered joints.

B. Aboveground, vent piping NPS 4 and smaller shall be the following:

1. Hubless cast-iron soil pipe and fittings; standard, shielded, stainless-steel couplings; and hubless-coupling joints.

C. Underground, soil, waste, and vent piping NPS 4 and smaller shall be the following:

1. Solid wall PVC pipe, PVC socket fittings, and solvent-cemented joints.

3.3 PIPING INSTALLATION

A. Basic piping installation requirements are specified in Division 15 Section "Basic Mechanical Materials and Methods."

B. Install cast-iron sleeve with water stop and mechanical sleeve seal at each service pipe penetration through foundation wall. Select number of interlocking rubber links required to make installation watertight. Sleeves and mechanical sleeve seals are specified in Division 15 Section "Basic Mechanical Materials and Methods."

C. Install cast-iron soil piping according to CISPI's "Cast Iron Soil Pipe and Fittings Handbook," Chapter IV, "Installation of Cast Iron Soil Pipe and Fittings."

D. Make changes in direction for soil and waste drainage and vent piping using appropriate branches, bends, and long-sweep bends. Sanitary tees and short-sweep 1/4 bends may be used on vertical stacks if change in direction of flow is from horizontal to vertical. Use long-turn, double Y-branch and 1/8-bend fittings if 2 fixtures are installed back to back or side by side with common drain pipe. Straight tees, elbows, and crosses may be used on vent lines. Do not change direction of flow more than 90 degrees. Use proper size of standard increasers and reducers if pipes of different sizes are connected. Reducing size of drainage piping in direction of flow is prohibited.

E. Lay buried building drainage piping beginning at low point of each system. Install true to grades and alignment indicated, with unbroken continuity of invert. Place hub ends of piping upstream. Install required gaskets according to manufacturer's written instructions for use of lubricants, cements, and other installation requirements. Maintain swab in piping and pull past each joint as completed.

F. Install soil and waste drainage and vent piping at the following minimum slopes, unless otherwise indicated:

1. Building Sanitary Drain: 2 percent downward in direction of flow for piping NPS 3 and smaller; 1 percent downward in direction of flow for piping NPS 4 and larger.
2. Horizontal Sanitary Drainage Piping: 2 percent downward in direction of flow.
3. Vent Piping: 1 percent down toward vertical fixture vent or toward vent stack.

G. Sleeves are not required for cast-iron soil piping passing through concrete slabs-on-grade if slab is without membrane waterproofing.

H. Install PVC soil and waste drainage and vent piping according to ASTM D 2665.

I. Do not enclose, cover, or put piping into operation until it is inspected and approved by authorities having jurisdiction.

3.4 JOINT CONSTRUCTION

A. Basic piping joint construction requirements are specified in Division 15 Section "Basic Mechanical Materials and Methods."

B. Join hubless cast-iron soil piping according to CISPI 310 and CISPI's "Cast Iron Soil Pipe and Fittings Handbook" for hubless-coupling joints.

C. Soldered Joints: Use ASTM B 813, water-flushable, lead-free flux; ASTM B 32, lead-free-alloy solder; and ASTM B 828 procedure, unless otherwise indicated.

D. PVC Nonpressure Piping Joints: Join piping according to ASTM D 2665.

3.5 HANGER AND SUPPORT INSTALLATION

A. Pipe hangers and supports are specified in Division 15 Section "Hangers and Supports." Install the following:

1. Vertical Piping: MSS Type 8 or Type 42, clamps.
2. Install individual, straight, horizontal piping runs according to the following:

    a. 100 Feet and Less: MSS Type 1, adjustable, steel clevis hangers.
    b. Longer Than 100 Feet: MSS Type 43, adjustable roller hangers.
    c. Longer Than 100 Feet, if Indicated: MSS Type 49, spring cushion rolls.

3. Multiple, Straight, Horizontal Piping Runs 100 Feet or Longer: MSS Type 44, pipe rolls. Support pipe rolls on trapeze.
4. Base of Vertical Piping: MSS Type 52, spring hangers.

B. Install supports according to Division 15 Section "Hangers and Supports."

C. Support vertical piping and tubing at base and at each floor.

D. Rod diameter may be reduced 1 size for double-rod hangers, with 3/8-inch minimum rods.

E. Install hangers for cast-iron soil piping with the following maximum horizontal spacing and minimum rod diameters:

1. NPS 1-1/2 and NPS 2: 60 inches with 3/8-inch rod.
2. NPS 3: 60 inches with 1/2-inch rod.

F. Support piping and tubing not listed above according to MSS SP-69 and manufacturer's written instructions.

3.6 CONNECTIONS

A. Drawings indicate general arrangement of piping, fittings, and specialties.

B. Connect drainage and vent piping to the following:

1. Plumbing Fixtures: Connect drainage piping in sizes indicated, but not smaller than required by plumbing code.
2. Plumbing Fixtures: Connect atmospheric vent piping in sizes indicated, but not smaller than required by authorities having jurisdiction.
3. Plumbing Specialties: Connect drainage and vent piping in sizes indicated, but not smaller than required by plumbing code.

3.7 FIELD QUALITY CONTROL

A. During installation, notify authorities having jurisdiction at least 24 hours before inspection must be made. Perform tests specified below in presence of authorities having jurisdiction.

1. Roughing-in Inspection: Arrange for inspection of piping before concealing or closing-in after roughing-in and before setting fixtures.
2. Final Inspection: Arrange for final inspection by authorities having jurisdiction to observe tests specified below and to ensure compliance with requirements.

B. Reinspection: If authorities having jurisdiction find that piping will not pass test or inspection, make required corrections and arrange for reinspection.

C. Reports: Prepare inspection reports and have them signed by authorities having jurisdiction.

D. Test sanitary drainage and vent piping according to procedures of authorities having jurisdiction or, in absence of published procedures, as follows:

1. Test for leaks and defects in new piping and parts of existing piping that have been altered, extended, or repaired. If testing is performed in segments, submit separate report for each test, complete with diagram of portion of piping tested.

2. Leave uncovered and unconcealed new, altered, extended, or replaced drainage and vent piping until it has been tested and approved. Expose work that was covered or concealed before it was tested.
3. Roughing-in Plumbing Test Procedure: Test drainage and vent piping, except outside leaders, on completion of roughing-in. Close openings in piping system and fill with water to point of overflow, but not less than 10-foot head of water. From 15 minutes before inspection starts to completion of inspection, water level must not drop. Inspect joints for leaks.
4. Finished Plumbing Test Procedure: After plumbing fixtures have been set and traps filled with water, test connections and prove they are gastight and watertight. Plug vent-stack openings on roof and building drains where they leave building. Introduce air into piping system equal to pressure of 1-inch wg. Use U-tube or manometer inserted in trap of water closet to measure this pressure. Air pressure must remain constant without introducing additional air throughout period of inspection. Inspect plumbing fixture connections for gas and water leaks.
5. Repair leaks and defects with new materials and retest piping, or portion thereof, until satisfactory results are obtained.
6. Prepare reports for tests and required corrective action.

3.8 CLEANING

A. Clean interior of piping. Remove dirt and debris as work progresses.

B. Protect drains during remainder of construction period to avoid clogging with dirt and debris and to prevent damage from traffic and construction work.

C. Place plugs in ends of uncompleted piping at end of day and when work stops.

3.9 PROTECTION

A. Exposed PVC Piping: Protect plumbing vents exposed to sunlight with two coats of water-based latex paint.

END OF SECTION 15150

SECTION 15155
SANITARY WASTE PIPING SPECIALTIES

PART 1 - GENERAL

1.1 RELATED DOCUMENTS

A. Drawings and general provisions of the Contract, including General and Supplementary Conditions and Division 1 Specification Sections, apply to this Section.

1.2 SUMMARY

A. This Section includes the following sanitary drainage piping specialties:

1. Cleanouts.

B. Related Sections include the following:

1. Division 15 Section "Storm Drainage Piping Specialties" for roof drains.

1.3 DEFINITIONS

A. PVC: Polyvinyl chloride plastic.

1.4 SUBMITTALS

A. Field quality-control test reports.

B. Operation and Maintenance Data: For drainage piping specialties to include in emergency, operation, and maintenance manuals.

1.5 QUALITY ASSURANCE

A. Drainage piping specialties shall bear label, stamp, or other markings of specified testing agency.

B. Comply with NSF 14, "Plastics Piping Components and Related Materials," for plastic sanitary piping specialty components.

1.6 COORDINATION

A. Coordinate size and location of concrete bases. Cast anchor-bolt inserts into bases. Concrete, reinforcement, and formwork requirements are specified in Division 3.

PART 2 - PRODUCTS

2.1 CLEANOUTS

A. Exposed Metal Cleanouts:

1. Manufacturers: Subject to compliance with requirements, provide products by one of the following:

   a. Josam Company; Josam Div.
   b. MIFAB, Inc.
   c. Smith, Jay R. Mfg. Co.; Division of Smith Industries, Inc.
   d. Tyler Pipe; Wade Div.
   e. Watts Drainage Products Inc.
   f. Zurn Plumbing Products Group; Specification Drainage Operation.

2. Standard: ASME A112.36.2M for cast iron for cleanout test tee.
3. Size: Same as connected drainage piping
4. Body Material: Hubless, cast-iron soil pipe test tee as required to match connected piping.
5. Closure: Countersunk or raised-head plug.
6. Closure Plug Size: Same as or not more than one size smaller than cleanout size.
7. Closure: Stainless-steel plug with seal.

B. Cast-Iron Wall Cleanouts:

1. Manufacturers: Subject to compliance with requirements, provide products by one of the following:

   a. Josam Company; Josam Div.
   b. MIFAB, Inc.
   c. Smith, Jay R. Mfg. Co.; Division of Smith Industries, Inc.
   d. Tyler Pipe; Wade Div.
   e. Watts Drainage Products Inc.
   f. Zurn Plumbing Products Group; Specification Drainage Operation.

2. Standard: ASME A112.36.2M. Include wall access.
3. Size: Same as connected drainage piping.
4. Body: Hubless, cast-iron soil pipe test tee as required to match connected piping.
5. Closure: Countersunk or raised-head plug.
6. Closure Plug Size: Same as or not more than one size smaller than cleanout size.
7. Wall Access: Round, flat, chrome-plated brass or stainless-steel cover plate with screw.
8. Wall Access: Round, nickel-bronze, copper-alloy, or stainless-steel wall-installation frame and cover.

PART 3 - EXECUTION

3.1 INSTALLATION

A. Refer to Division 15 Section "Common Work Results for Plumbing" for piping joining materials, joint construction, and basic installation requirements.

B. Install cleanouts in aboveground piping and building drain piping according to the following, unless otherwise indicated:

1. Size same as drainage piping up to NPS 4. Use NPS 4 for larger drainage piping unless larger cleanout is indicated.
2. Locate at each change in direction of piping greater than 45 degrees.
3. Locate at minimum intervals of 50 feet for piping NPS 4 and smaller and 100 feet for larger piping.
4. Locate at base of each vertical soil and waste stack.

C. For floor cleanouts for piping below floors, install cleanout deck plates with top flush with finished floor.

D. For cleanouts located in concealed piping, install cleanout wall access covers, of types indicated, with frame and cover flush with finished wall.

E. Install wood-blocking reinforcement for wall-mounting-type specialties.

F. Install traps on plumbing specialty drain outlets. Omit traps on indirect wastes unless trap is indicated.

G. Install escutcheons at wall, floor, and ceiling penetrations in exposed finished locations and within cabinets and millwork. Use deep-pattern escutcheons if required to conceal protruding pipe fittings.

3.2 CONNECTIONS

A. Piping installation requirements are specified in other Division 15 Sections. Drawings indicate general arrangement of piping, fittings, and specialties.

B. Install piping adjacent to equipment to allow service and maintenance.

3.3 PROTECTION

A. Protect drains during remainder of construction period to avoid clogging with dirt or debris and to prevent damage from traffic or construction work.

B. Place plugs in ends of uncompleted piping at end of each day or when work stops.

END OF SECTION 15155

SECTION 15160
STORM DRAINAGE PIPING

PART 1 - GENERAL

1.1 RELATED DOCUMENTS

A. Drawings and general provisions of the Contract, including General and Supplementary Conditions and Division 1 Specification Sections, apply to this Section.

1.2 SUMMARY

A. This Section includes the following storm drainage piping inside the building:

1. Pipe, tube, and fittings.

1.3 DEFINITIONS

A. PVC: Polyvinyl chloride plastic.

1.4 PERFORMANCE REQUIREMENTS

A. Components and installation shall be capable of withstanding the following minimum working-pressure, unless otherwise indicated:

1. Storm Drainage Piping: 10-foot head of water.

1.5 SUBMITTALS

A. Product Data: For pipe, tube, fittings, and couplings.

1.6 QUALITY ASSURANCE

A. Piping materials shall bear label, stamp, or other markings of specified testing agency.

B. Comply with NSF 14, "Plastics Piping Systems Components and Related Materials," for plastic piping components. Include marking with "NSF-drain" for plastic drain piping and "NSF-sewer" for plastic sewer piping.

PART 2 - PRODUCTS

2.1 MANUFACTURERS

A. In other Part 2 articles where titles below introduce lists, the following requirements apply to product selection:

1. Manufacturers: Subject to compliance with requirements, provide products by one of the manufacturers specified.

2.2 PIPING MATERIALS

A. Refer to Part 3 "Piping Applications" Article for applications of pipe, tube, fitting, and joining materials.

2.3 HUBLESS CAST-IRON SOIL PIPE AND FITTINGS

A. Pipe and Fittings: ASTM A 888 or CISPI 301.

B. Shielded Couplings: ASTM C 1277 assembly of metal shield or housing, corrosion-resistant fasteners, and rubber sleeve with integral, center pipe stop.

1. Standard, Shielded, Stainless-Steel Couplings: CISPI 310, with stainless-steel corrugated shield; stainless-steel bands and tightening devices; and ASTM C 564, rubber sleeve.

a. Manufacturers:

1) ANACO.
2) Fernco, Inc.
3) Ideal Div.; Stant Corp.
4) Mission Rubber Co.
5) Tyler Pipe; Soil Pipe Div.

PART 3 - EXECUTION

3.1 EXCAVATION

A. Refer to Division 2 Section "Earthwork" for excavating, trenching, and backfilling.

3.2 PIPING APPLICATIONS

A. Flanges and unions may be used on aboveground pressure piping, unless otherwise indicated.

B. Aboveground storm drainage piping NPS 6 and smaller shall be the following:

1. Hubless cast-iron soil pipe and fittings; standard shielded, stainless-steel couplings; and coupled joints.

C. Underground storm drainage piping NPS 6 and smaller shall be the following:

1. Solid-wall PVC pipe, PVC socket fittings, and solvent-cemented joints.

3.3 PIPING INSTALLATION

A. Storm sewer and drainage piping outside the building are specified in Division 2 Section "Storm Drainage."

B. Basic piping installation requirements are specified in Division 15 Section "Basic Mechanical Materials and Methods."

C. Install cast-iron sleeve with water stop and mechanical sleeve seal at each service pipe penetration through foundation wall. Select number of interlocking rubber links required to make installation watertight. Sleeves and mechanical sleeve seals are specified in Division 15 Section "Basic Mechanical Materials and Methods."

D. Install cast-iron soil piping according to CISPI's "Cast Iron Soil Pipe and Fittings Handbook," Chapter IV, "Installation of Cast Iron Soil Pipe and Fittings."

1. Install encasement on underground piping according to ASTM A 674 or AWWA C105.

E. Make changes in direction for storm drainage piping using appropriate branches, bends, and long-sweep bends. Do not change direction of flow more than 90 degrees. Use proper size of standard increasers and reducers if pipes of different sizes are connected. Reducing size of drainage piping in direction of flow is prohibited.

F. Install storm drainage piping at the following minimum slopes, unless otherwise indicated:

1. Building Storm Drain: 1 percent downward in direction of flow for piping NPS 3 and smaller; 1 percent downward in direction of flow for piping NPS 4 and larger.
2. Horizontal Storm-Drainage Piping: 2 percent downward in direction of flow.

G. Sleeves are not required for cast-iron soil piping passing through concrete slabs-on-grade if slab is without membrane waterproofing.

H. Do not enclose, cover, or put piping into operation until it is inspected and approved by authorities having jurisdiction.

3.4 JOINT CONSTRUCTION

A. Basic piping joint construction requirements are specified in Division 15 Section "Basic Mechanical Materials and Methods."

B. Hubless Cast-Iron Soil Piping Coupled Joints: Join according to CISPI 310 and CISPI's "Cast Iron Soil Pipe and Fittings Handbook" for hubless-coupling joints.

3.5 HANGER AND SUPPORT INSTALLATION

A. Pipe hangers and supports are specified in Division 15 Section "Hangers and Supports." Install the following:

1. Vertical Piping: MSS Type 8 or Type 42, clamps.
2. Individual, Straight, Horizontal Piping Runs: According to the following:

    a. 100 Feet and Less: MSS Type 1, adjustable, steel clevis hangers.
    b. Longer Than 100 Feet: MSS Type 43, adjustable roller hangers.
    c. Longer Than 100 Feet, if Indicated: MSS Type 49, spring cushion rolls.

3. Multiple, Straight, Horizontal Piping Runs 100 Feet or Longer: MSS Type 44, pipe rolls. Support pipe rolls on trapeze.
4. Base of Vertical Piping: MSS Type 52, spring hangers.

B. Install supports according to Division 15 Section "Hangers and Supports."

C. Support vertical piping and tubing at base and at each floor.

D. Rod diameter may be reduced 1 size for double-rod hangers, with 3/8-inch minimum rods.

E. Install hangers for cast-iron soil piping with the following maximum horizontal spacing and minimum rod diameters:

1. NPS 1-1/2 and NPS 2: 60 inches with 3/8-inch rod.
2. NPS 3: 60 inches with 1/2-inch rod.
3. NPS 4 and NPS 5: 60 inches with 5/8-inch rod.
4. NPS 6: 60 inches with 3/4-inch rod.

F. Install supports for vertical cast-iron soil piping every 15 feet.

G. Support piping and tubing not listed above according to MSS SP-69 and manufacturer's written instructions.

3.6 CONNECTIONS

A. Drawings indicate general arrangement of piping, fittings, and specialties.

B. Connect interior storm drainage piping to exterior storm drainage piping. Use transition fitting to join dissimilar piping materials.

C. Connect storm drainage piping to roof drains and storm drainage specialties.

3.7 FIELD QUALITY CONTROL

A. During installation, notify authorities having jurisdiction at least 24 hours before inspection must be made. Perform tests specified below in presence of authorities having jurisdiction.

1. Roughing-in Inspection: Arrange for inspection of piping before concealing or closing-in after roughing-in.
2. Final Inspection: Arrange for final inspection by authorities having jurisdiction to observe tests specified below and to ensure compliance with requirements.

B. Reinspection: If authorities having jurisdiction find that piping will not pass test or inspection, make required corrections and arrange for reinspection.

C. Reports: Prepare inspection reports and have them signed by authorities having jurisdiction.

D. Test storm drainage piping according to procedures of authorities having jurisdiction or, in absence of published procedures, as follows:

1. Test for leaks and defects in new piping and parts of existing piping that have been altered, extended, or repaired. If testing is performed in segments, submit separate report for each test, complete with diagram of portion of piping tested.
2. Leave uncovered and unconcealed new, altered, extended, or replaced storm drainage piping until it has been tested and approved. Expose work that was covered or concealed before it was tested.
3. Test Procedure: Test storm drainage piping, except outside leaders, on completion of roughing-in. Close openings in piping system and fill with water to point of overflow, but not less than 10-foot head of water. From 15 minutes before inspection starts to completion of inspection, water level must not drop. Inspect joints for leaks.
4. Repair leaks and defects with new materials and retest piping, or portion thereof, until satisfactory results are obtained.
5. Prepare reports for tests and required corrective action.

3.8 CLEANING

A. Clean interior of piping. Remove dirt and debris as work progresses.

B. Protect drains during remainder of construction period to avoid clogging with dirt and debris and to prevent damage from traffic and construction work.

C. Place plugs in ends of uncompleted piping at end of day and when work stops.

END OF SECTION 15160

SECTION 15165
STORM DRAINAGE PIPING SPECIALTIES

PART 1 - GENERAL

1.1 RELATED DOCUMENTS

A. Drawings and general provisions of the Contract, including General and Supplementary Conditions and Division 1 Specification Sections, apply to this Section.

1.2 SUMMARY

A. This Section includes the following storm drainage piping specialties:

1. Cleanouts.
2. Roof drains.

1.3 DEFINITIONS

A. PVC: Polyvinyl chloride plastic.

1.4 SUBMITTALS

A. Product Data: For each type of product indicated.

1.5 QUALITY ASSURANCE

A. Drainage piping specialties shall bear label, stamp, or other markings of specified testing agency.

1.6 COORDINATION

A. Coordinate size and location of roof penetrations.

PART 2 - PRODUCTS

2.1 CLEANOUTS

A. Exposed Metal Cleanouts:

1. Manufacturers: Subject to compliance with requirements, provide products by one of the following:

    a. Josam Company; Josam Div.
    b. MIFAB, Inc.
    c. Smith, Jay R. Mfg. Co.; Division of Smith Industries, Inc.
    d. Tyler Pipe; Wade Div.
    e. Watts Drainage Products Inc.
    f. Zurn Plumbing Products Group; Specification Drainage Operation.

2. Standard: ASME A112.36.2M for cast iron for cleanout test tee.
3. Size: Same as connected drainage piping
4. Body Material: Hubless, cast-iron soil pipe test tee as required to match connected piping.
5. Closure: Countersunk or raised-head plug.
6. Closure Plug Size: Same as or not more than one size smaller than cleanout size.

B. Metal Floor Cleanouts:

1. Manufacturers: Subject to compliance with requirements, provide products by one of the following:

    a. Josam Company; Josam Div.
    b. Smith, Jay R. Mfg. Co.; Division of Smith Industries, Inc.
    c. Tyler Pipe; Wade Div.
    d. Watts Drainage Products Inc.
    e. Zurn Plumbing Products Group; Specification Drainage Operation.

2. Standard: ASME A112.36.2M for adjustable housing and cast-iron soil pipe with cast-iron ferrule cleanout.
3. Size: Same as connected branch.
4. Type: Adjustable housing and Cast-iron soil pipe with cast-iron ferrule.
5. Body or Ferrule: Cast iron.
6. Clamping Device: Not required.
7. Outlet Connection: Spigot.
8. Closure: Brass plug with tapered threads.
9. Adjustable Housing Material: Cast iron with threads.
10. Frame and Cover Material and Finish: Nickel-bronze, copper alloy.
11. Frame and Cover Shape: Round.
12. Top Loading Classification: Light Duty.
13. Riser: ASTM A 74, Service class, cast-iron drainage pipe fitting and riser to cleanout.

C. Cast-Iron Wall Cleanouts:

1. Manufacturers: Subject to compliance with requirements, provide products by one of the following:

   a. Josam Company; Josam Div.
   b. MIFAB, Inc.
   c. Smith, Jay R. Mfg. Co.; Division of Smith Industries, Inc.
   d. Tyler Pipe; Wade Div.
   e. Watts Drainage Products Inc.
   f. Zurn Plumbing Products Group; Specification Drainage Operation.

2. Standard: ASME A112.36.2M. Include wall access.
3. Size: Same as connected drainage piping.
4. Body: Hubless, cast-iron soil pipe test tee as required to match connected piping.
5. Closure: Countersunk or raised-head plug.
6. Closure Plug Size: Same as or not more than one size smaller than cleanout size.
7. Wall Access: Round, flat, chrome-plated brass or stainless-steel cover plate with screw.
8. Wall Access: Round, nickel-bronze, copper-alloy, or stainless-steel wall-installation frame and cover.

2.2 ROOF DRAINS

A. Metal Roof Drains **RD-1**:

1. Manufacturers: Subject to compliance with requirements, provide products by one of the following:

   a. Josam Company; Josam Div.
   b. MIFAB, Inc.
   c. Smith, Jay R. Mfg. Co.; Division of Smith Industries, Inc.
   d. Tyler Pipe; Wade Div.
   e. Watts Drainage Products Inc.
   f. Zurn Plumbing Products Group; Specification Drainage Operation.

2. Standard: ASME A112.21.2M.
3. Pattern: Roof drain.
4. Body Material: Cast iron.
5. Dimensions of Body: 15" diameter sump and dome.
6. Combination Flashing Ring and Gravel Stop: Not required.
7. Outlet: 3" Bottom.
8. Dome Material: PE.
9. Extension Collars: Required.
10. Underdeck Clamp: Required.
11. Sump Receiver: Required.

2.3 OVERFLOW DRAINS

A. Overflow Drains **OD-1**:

1. Manufacturers: Subject to compliance with requirements, provide products by one of the following:

    a. Josam Company; Josam Div.
    b. MIFAB, Inc.
    c. Smith, Jay R. Mfg. Co.; Division of Smith Industries, Inc.
    d. Tyler Pipe; Wade Div.
    e. Watts Drainage Products Inc.
    f. Zurn Plumbing Products Group; Specification Drainage Operation.

2. Standard: ASME A112.21.2M.
3. Pattern: Overflow drain.
4. Body Material: Cast iron.
5. Dimensions of Body: 15" diameter sump and dome.
6. Combination Flashing Ring and Gravel Stop: Not required.
7. Outlet: 3"Bottom.
8. Dome Material: PE.
9. Extension Collars: Not Required.
10. Underdeck Clamp: Not Required.
11. Sump Receiver: Not Required.

B. Downspout Nozzles **DN-1 and 2**:

1. Manufacturers: Subject to compliance with requirements, provide products by one of the following:

    a. Josam Company; Josam Div.
    b. MIFAB, Inc.
    c. Smith, Jay R. Mfg. Co.; Division of Smith Industries, Inc.
    d. Tyler Pipe; Wade Div.
    e. Watts Drainage Products Inc.
    f. Zurn Plumbing Products Group; Specification Drainage Operation.

2. Body Material: Plain bronze.
3. Dimensions of Body: 3" and 4" threaded inlet with flange to secure to wall.
4. Inlet: Side

PART 3 - EXECUTION

3.1 INSTALLATION

A. Refer to Division 15 Section "Common Work Results for Plumbing" for piping joining materials, joint construction, and basic installation requirements.

B. Install cleanouts in aboveground piping and building drain piping according to the following, unless otherwise indicated:

1. Size same as drainage piping up to NPS 4. Use NPS 4 for larger drainage piping unless larger cleanout is indicated.
2. Locate at each change in direction of piping greater than 45 degrees.
3. Locate at minimum intervals of 50 feet for piping NPS 4 and smaller and 100 feet for larger piping.
4. Locate at base of each vertical soil and waste stack.

C. For floor cleanouts for piping below floors, install cleanout deck plates with top flush with finished floor.

D. For cleanouts located in concealed piping, install cleanout wall access covers, of types indicated, with frame and cover flush with finished wall.

E. Install roof drains at low points of roof areas according to roof membrane manufacturer's written installation instructions. Roofing materials are specified in Division 7.

1. Install roof-drain flashing collar or flange so that there will be no leakage between drain and adjoining roofing. Maintain integrity of waterproof membranes where penetrated.
2. Position roof drains for easy access and maintenance.

3.2 CONNECTIONS

A. Piping installation requirements are specified in other Division 15 Sections. Drawings indicate general arrangement of piping, fittings, and specialties.

3.3 PROTECTION

A. Protect drains during remainder of construction period to avoid clogging with dirt or debris and to prevent damage from traffic or construction work.

B. Place plugs in ends of uncompleted piping at end of each day or when work stops.

END OF SECTION 15165

SECTION 15181
HYDRONIC PIPING

PART 1 - GENERAL

1.1 RELATED DOCUMENTS

A. Drawings and general provisions of the Contract, including General and Supplementary Conditions and Division 1 Specification Sections, apply to this Section.

1.2 SUMMARY

A. This Section includes pipe and fitting materials, joining methods, special-duty valves, and specialties for the following:

1. Hot-water heating piping.
2. Chilled-water piping.
3. Makeup-water piping.
4. Condensate-drain piping.
5. Air-vent piping.

B. Related Sections include the following:

1. Division 15 Section "Hydronic Pumps" for pumps, motors, and accessories for hydronic piping.

1.3 DEFINITIONS

A. PTFE: Polytetrafluoroethylene.

1.4 PERFORMANCE REQUIREMENTS

A. Hydronic piping components and installation shall be capable of withstanding the following minimum working pressure and temperature:

1. Hot-Water Heating Piping: 30 psig at 200 deg F.
2. Chilled-Water Piping: 30 psig at 100 deg F.
3. Makeup-Water Piping: 80 psig at 150 deg F.
4. Air-Vent Piping: 200 deg F.

1.5 SUBMITTALS

A. Product Data: For each type of the following:

1. Valves. Include flow and pressure drop curves based on manufacturer's testing for calibrated-orifice balancing valves and automatic flow-control valves.
2. Air control devices.
3. Hydronic specialties.

B. Operation and Maintenance Data: For air control devices, hydronic specialties, and special-duty valves to include in emergency, operation, and maintenance manuals.

1.6 QUALITY ASSURANCE

A. Steel Support Welding: Qualify processes and operators according to AWS D1.1/D1.1M, "Structural Welding Code - Steel."

B. ASME Compliance: Comply with ASME B31.9, "Building Services Piping," for materials, products, and installation. Safety valves and pressure vessels shall bear the appropriate ASME label. Fabricate and stamp air separators and expansion tanks to comply with ASME Boiler and Pressure Vessel Code: Section VIII, Division 1.

PART 2 - PRODUCTS

2.1 COPPER TUBE AND FITTINGS

A. Drawn-Temper Copper Tubing: ASTM B 88, Type L.

B. Annealed-Temper Copper Tubing: ASTM B 88, Type K.

C. Wrought-Copper Fittings: ASME B16.22.

1. Manufacturers: Subject to compliance with requirements, provide products by one of the following:

a. Anvil International, Inc.
b. S. P. Fittings; a division of Star Pipe Products.
c. Victaulic Company of America.

2. Grooved-End Copper Fittings: ASTM B 75, copper tube or ASTM B 584, bronze casting.
3. Grooved-End-Tube Couplings: Rigid pattern, unless otherwise indicated; gasketed fitting. Ductile-iron housing with keys matching pipe and fitting grooves, prelubricated EPDM gasket rated for minimum 230 deg F for use with housing, and steel bolts and nuts.

D. Wrought-Copper Unions: ASME B16.22.

2.2 STEEL PIPE AND FITTINGS

A. Steel Pipe: ASTM A 53/A 53M, black steel with plain ends; type, grade, and wall thickness as indicated in Part 3 "Piping Applications" Article.

B. Grooved Mechanical-Joint Fittings and Couplings:

1. Manufacturers: Subject to compliance with requirements, provide products by one of the following:

   a. Anvil International, Inc.
   b. National Fittings, Inc.
   c. S. P. Fittings; a division of Star Pipe Products.
   d. Victaulic Company of America.

2. Joint Fittings: ASTM A 536, Grade 65-45-12 ductile iron; ASTM A 47/A 47M, Grade 32510 malleable iron; ASTM A 53/A 53M, Type F, E, or S, Grade B fabricated steel; or ASTM A 106, Grade B steel fittings with grooves or shoulders constructed to accept grooved-end couplings; with nuts, bolts, locking pin, locking toggle, or lugs to secure grooved pipe and fittings.
3. Couplings: Ductile- or malleable-iron housing and synthetic rubber gasket of central cavity pressure-responsive design; with nuts, bolts, locking pin, locking toggle, or lugs to secure grooved pipe and fittings.

C. Steel Pipe Nipples: ASTM A 733, made of same materials and wall thicknesses as pipe in which they are installed.

2.3 JOINING MATERIALS

A. Pipe-Flange Gasket Materials: Suitable for chemical and thermal conditions of piping system contents.

1. ASME B16.21, nonmetallic, flat, asbestos free, 1/8-inch maximum thickness unless thickness or specific material is indicated.

B. Solder Filler Metals: ASTM B 32, lead-free alloys. Include water-flushable flux according to ASTM B 813.

C. Gasket Material: Thickness, material, and type suitable for fluid to be handled and working temperatures and pressures.

2.4 DIELECTRIC FITTINGS

A. Description: Combination fitting of copper-alloy and ferrous materials with threaded, solder-joint, plain, or weld-neck end connections that match piping system materials.

B. Insulating Material: Suitable for system fluid, pressure, and temperature.

C. Dielectric-Flange Kits:

1. Manufacturers: Subject to compliance with requirements, provide products by one of the following:

    a. Advance Products & Systems, Inc.
    b. Calpico, Inc.
    c. Central Plastics Company.
    d. Pipeline Seal and Insulator, Inc.

2. Companion-flange assembly for field assembly. Include flanges, full-face- or ring-type neoprene or phenolic gasket, phenolic or polyethylene bolt sleeves, phenolic washers, and steel backing washers.
3. Separate companion flanges and steel bolts and nuts shall have 150- or 300-psig minimum working pressure where required to suit system pressures.

D. Dielectric Nipples:

1. Manufacturers: Subject to compliance with requirements, provide products by one of the following:

    a. Perfection Corporation; a subsidiary of American Meter Company.
    b. Precision Plumbing Products, Inc.
    c. Sioux Chief Manufacturing Company, Inc.
    d. Victaulic Company of America.

2. Electroplated steel nipple with inert and noncorrosive, thermoplastic lining; plain, threaded, or grooved ends; and 300-psig minimum working pressure at 225 deg F.

2.5 VALVES

A. Gate, Globe, Check, Ball, and Butterfly Valves: Comply with requirements specified in Division 15 Section "Valves."

B. Bronze, Calibrated-Orifice, Balancing Valves:

1. Manufacturers: Subject to compliance with requirements, provide products by one of the following:

    a. Armstrong Pumps, Inc.
    b. Bell & Gossett Domestic Pump; a division of ITT Industries.
    c. Flow Design Inc.
    d. Griswold Controls.
    e. Taco.

2. Body: Bronze, ball or plug type with calibrated orifice or venturi.
3. Ball: Brass or stainless steel.
4. Plug: Resin.
5. Seat: PTFE.
6. End Connections: Threaded or socket.
7. Pressure Gage Connections: Integral seals for portable differential pressure meter.
8. Handle Style: Lever, with memory stop to retain set position.

9. CWP Rating: Minimum 125 psig.
10. Maximum Operating Temperature: 250 deg F.

C. Cast-Iron or Steel, Calibrated-Orifice, Balancing Valves:

1. Manufacturers: Subject to compliance with requirements, provide products by one of the following:

    a. Armstrong Pumps, Inc.
    b. Bell & Gossett Domestic Pump; a division of ITT Industries.
    c. Flow Design Inc.
    d. Griswold Controls.
    e. Tour & Andersson; available through Victaulic Company of America.

2. Body: Cast-iron or steel body, ball, plug, or globe pattern with calibrated orifice or venturi.
3. Ball: Brass or stainless steel.
4. Stem Seals: EPDM O-rings.
5. Disc: Glass and carbon-filled PTFE.
6. Seat: PTFE.
7. End Connections: Flanged or grooved.
8. Pressure Gage Connections: Integral seals for portable differential pressure meter.
9. Handle Style: Lever, with memory stop to retain set position.
10. CWP Rating: Minimum 125 psig.
11. Maximum Operating Temperature: 250 deg F.

D. Diaphragm-Operated, Pressure-Reducing Valves:

1. Manufacturers: Subject to compliance with requirements, provide products by one of the following:

    a. Amtrol, Inc.
    b. Armstrong Pumps, Inc.
    c. Bell & Gossett Domestic Pump; a division of ITT Industries.
    d. Conbraco Industries, Inc.
    e. Watts Regulator Co.; a division of Watts Water Technologies, Inc.

2. Body: Bronze or brass.
3. Disc: Glass and carbon-filled PTFE.
4. Seat: Brass.
5. Stem Seals: EPDM O-rings.
6. Diaphragm: EPT.
7. Low inlet-pressure check valve.
8. Inlet Strainer: Brass, removable without system shutdown.
9. Valve Seat and Stem: Noncorrosive.
10. Valve Size, Capacity, and Operating Pressure: Selected to suit system in which installed, with operating pressure and capacity factory set and field adjustable.

2.6 AIR CONTROL DEVICES

A. Manufacturers: Subject to compliance with requirements, provide products by one of the following:

1. Amtrol, Inc.
2. Armstrong Pumps, Inc.
3. Bell & Gossett Domestic Pump; a division of ITT Industries.
4. Taco.

B. Manual Air Vents:

1. Body: Bronze.
2. Internal Parts: Nonferrous.
3. Operator: Screwdriver or thumbscrew.
4. Inlet Connection: NPS 1/2.
5. Discharge Connection: NPS 1/8.
6. CWP Rating: 150 psig.
7. Maximum Operating Temperature: 225 deg F.

C. Automatic Air Vents:

1. Body: Bronze or cast iron.
2. Internal Parts: Nonferrous.
3. Operator: Noncorrosive metal float.
4. Inlet Connection: NPS 1/2.
5. Discharge Connection: NPS 1/4.
6. CWP Rating: 150 psig.
7. Maximum Operating Temperature: 240 deg F.

D. Bladder-Type Expansion Tanks:

1. Tank: Welded steel, rated for 125-psig working pressure and 375 deg F maximum operating temperature. Factory test with taps fabricated and supports installed and labeled according to ASME Boiler and Pressure Vessel Code: Section VIII, Division 1.
2. Bladder: Securely sealed into tank to separate air charge from system water to maintain required expansion capacity.
3. Air-Charge Fittings: Schrader valve, stainless steel with EPDM seats.

E. Tangential-Type Air Separators:

1. Tank: Welded steel; ASME constructed and labeled for 125-psig minimum working pressure and 375 deg F maximum operating temperature.
2. Air Collector Tube: Perforated stainless steel, constructed to direct released air into expansion tank.
3. Tangential Inlet and Outlet Connections: Threaded for NPS 2 and smaller; flanged connections for NPS 2-1/2 and larger.
4. Blowdown Connection: Threaded.
5. Size: Match system flow capacity.

2.7 HYDRONIC PIPING SPECIALTIES

A. Y-Pattern Strainers:

1. Body: ASTM A 126, Class B, cast iron with bolted cover and bottom drain connection.
2. End Connections: Threaded ends for NPS 2 and smaller; flanged ends for NPS 2-1/2 and larger.
3. Strainer Screen: 40-mesh startup strainer, and perforated stainless-steel basket with 50 percent free area.
4. CWP Rating: 125 psig.

B. Stainless-Steel Bellow, Flexible Connectors:

1. Body: Stainless-steel bellows with woven, flexible, bronze, wire-reinforcing protective jacket.
2. End Connections: Threaded or flanged to match equipment connected.
3. Performance: Capable of 3/4-inch misalignment.
4. CWP Rating: 150 psig.
5. Maximum Operating Temperature: 250 deg F.

PART 3 - EXECUTION

3.1 PIPING APPLICATIONS

A. Hot-water heating piping, aboveground, NPS 2 and smaller, shall be the following:

1. Type L, drawn-temper copper tubing, wrought-copper fittings, and soldered joints.

B. Hot-water heating piping, aboveground, NPS 2-1/2 and larger, shall be the following:

1. Schedule 40 steel pipe; grooved, mechanical joint coupling and fittings; and grooved, mechanical joints.

C. Hot-water heating piping installed belowground and within slabs shall be the following:

1. Type K, annealed-temper copper tubing, wrought-copper fittings, and soldered joints. Use the fewest possible joints.

D. Chilled-water piping, aboveground, NPS 2 and smaller, shall be the following:

1. Type L, drawn-temper copper tubing, wrought-copper fittings, and soldered joints.

E. Chilled-water piping, aboveground, NPS 2-1/2 and larger, shall be the following:

1. Schedule 40 steel pipe; grooved, mechanical joint coupling and fittings; and grooved, mechanical joints.

F. Chilled-water piping installed belowground and within slabs shall be the following:

1. Type K, annealed-temper copper tubing, wrought-copper fittings, and soldered joints. Use the fewest possible joints.

G. Makeup-water piping installed aboveground shall be the following:

1. Type L, drawn-temper copper tubing, wrought-copper fittings, and soldered joints.

H. Condensate-Drain Piping: Type M, drawn-temper copper tubing, wrought-copper fittings, and soldered joints.

I. Air-Vent Piping:

1. Inlet: Same as service where installed with metal-to-plastic transition fittings for plastic piping systems according to the piping manufacturer's written instructions.
2. Outlet: Type K, annealed-temper copper tubing with soldered or flared joints.

3.2 VALVE APPLICATIONS

A. Install shutoff-duty valves at each branch connection to supply mains, and at supply connection to each piece of equipment.

B. Install calibrated-orifice, balancing valves at each branch connection to return main.

C. Install calibrated-orifice, balancing valves in the return pipe of each heating or cooling terminal.

D. Install pressure-reducing valves at makeup-water connection to regulate system fill pressure.

3.3 PIPING INSTALLATIONS

A. Drawing plans, schematics, and diagrams indicate general location and arrangement of piping systems. Indicate piping locations and arrangements if such were used to size pipe and calculate friction loss, expansion, pump sizing, and other design considerations. Install piping as indicated unless deviations to layout are approved on Coordination Drawings.

B. Install piping in concealed locations, unless otherwise indicated and except in equipment rooms and service areas.

C. Install piping indicated to be exposed and piping in equipment rooms and service areas at right angles or parallel to building walls. Diagonal runs are prohibited unless specifically indicated otherwise.

D. Install piping above accessible ceilings to allow sufficient space for ceiling panel removal.

E. Install piping to permit valve servicing.

F. Install piping at indicated slopes.

G. Install piping free of sags and bends.

H. Install fittings for changes in direction and branch connections.

I. Install piping to allow application of insulation.

J. Select system components with pressure rating equal to or greater than system operating pressure.

K. Install groups of pipes parallel to each other, spaced to permit applying insulation and servicing of valves.

L. Install drains, consisting of a tee fitting, NPS 3/4 ball valve, and short NPS 3/4 threaded nipple with cap, at low points in piping system mains and elsewhere as required for system drainage.

M. Install piping at a uniform grade of 0.2 percent upward in direction of flow.

N. Reduce pipe sizes using eccentric reducer fitting installed with level side up.

O. Install branch connections to mains using tee fittings in main pipe, with the branch connected to the bottom of the main pipe. For up-feed risers, connect the branch to the top of the main pipe.

P. Install valves according to Division 15 Section "Valves."

Q. Install unions in piping, NPS 2 and smaller, adjacent to valves, at final connections of equipment, and elsewhere as indicated.

R. Install flanges in piping, NPS 2-1/2 and larger, at final connections of equipment and elsewhere as indicated.

S. Install strainers on inlet side of each control valve, pressure-reducing valve, solenoid valve, in-line pump, and elsewhere as indicated. Install NPS 3/4 nipple and ball valve in blowdown connection of strainers NPS 2 and larger. Match size of strainer blowoff connection for strainers smaller than NPS 2.

T. Install expansion loops, expansion joints, anchors, and pipe alignment guides as specified in Division 15 Section "Pipe Expansion Fittings and Loops."

U. Identify piping as specified in Division 15 Section "Mechanical Identification."

3.4 HANGERS AND SUPPORTS

A. Hanger, support, and anchor devices are specified in Division 15 Section "Hangers and Supports." Comply with the following requirements for maximum spacing of supports.

B. Install the following pipe attachments:

1. Adjustable steel clevis hangers for individual horizontal piping less than 20 feet long.
2. Adjustable roller hangers and spring hangers for individual horizontal piping 20 feet or longer.
3. Pipe Roller: MSS SP-58, Type 44 for multiple horizontal piping 20 feet or longer, supported on a trapeze.
4. Spring hangers to support vertical runs.
5. Provide copper-clad hangers and supports for hangers and supports in direct contact with copper pipe.

6. On plastic pipe, install pads or cushions on bearing surfaces to prevent hanger from scratching pipe.

C. Install hangers for steel piping with the following maximum spacing and minimum rod sizes:

1. NPS 3/4: Maximum span, 7 feet; minimum rod size, 1/4 inch.
2. NPS 1: Maximum span, 7 feet; minimum rod size, 1/4 inch.
3. NPS 1-1/2: Maximum span, 9 feet; minimum rod size, 3/8 inch.
4. NPS 2: Maximum span, 10 feet; minimum rod size, 3/8 inch.
5. NPS 2-1/2: Maximum span, 11 feet; minimum rod size, 3/8 inch.
6. NPS 3: Maximum span, 12 feet; minimum rod size, 3/8 inch.
7. NPS 4: Maximum span, 14 feet; minimum rod size, 1/2 inch.
8. NPS 6: Maximum span, 17 feet; minimum rod size, 1/2 inch.
9. NPS 8: Maximum span, 19 feet; minimum rod size, 5/8 inch.
10. NPS 10: Maximum span, 20 feet; minimum rod size, 3/4 inch.

D. Install hangers for drawn-temper copper piping with the following maximum spacing and minimum rod sizes:

1. NPS 3/4: Maximum span, 5 feet; minimum rod size, 1/4 inch.
2. NPS 1: Maximum span, 6 feet; minimum rod size, 1/4 inch.
3. NPS 1-1/2: Maximum span, 8 feet; minimum rod size, 3/8 inch.
4. NPS 2: Maximum span, 8 feet; minimum rod size, 3/8 inch.
5. NPS 2-1/2: Maximum span, 9 feet; minimum rod size, 3/8 inch.
6. NPS 3: Maximum span, 10 feet; minimum rod size, 3/8 inch.

E. Support vertical runs at roof, at each floor, and at 10-foot intervals between floors.

3.5 PIPE JOINT CONSTRUCTION

A. Join pipe and fittings according to the following requirements and Division 15 Sections specifying piping systems.

B. Ream ends of pipes and tubes and remove burrs. Bevel plain ends of steel pipe.

C. Remove scale, slag, dirt, and debris from inside and outside of pipe and fittings before assembly.

D. Soldered Joints: Apply ASTM B 813, water-flushable flux, unless otherwise indicated, to tube end. Construct joints according to ASTM B 828 or CDA's "Copper Tube Handbook," using lead-free solder alloy complying with ASTM B 32.

E. Grooved Joints: Assemble joints with coupling and gasket, lubricant, and bolts. Cut or roll grooves in ends of pipe based on pipe and coupling manufacturer's written instructions for pipe wall thickness. Use grooved-end fittings and rigid, grooved-end-pipe couplings.

3.6 HYDRONIC SPECIALTIES INSTALLATION

A. Install manual air vents at high points in piping, at heat-transfer coils, and elsewhere as required for system air venting.

B. Install automatic air vents at high points of system piping in mechanical equipment rooms only. Manual vents at heat-transfer coils and elsewhere as required for air venting.

C. Install piping from boiler air outlet, air separator, or air purger to expansion tank with a 2 percent upward slope toward tank.

D. Install tangential air separator in pump suction. Install blowdown piping with gate or full-port ball valve; extend full size to nearest floor drain.

E. Install expansion tanks above the air separator. Install tank fitting in tank bottom and charge tank. Use manual vent for initial fill to establish proper water level in tank.

1. Install tank fittings that are shipped loose.
2. Support tank from floor or structure above with sufficient strength to carry weight of tank, piping connections, fittings, plus tank full of water. Do not overload building components and structural members.

F. Install expansion tanks on the floor. Vent and purge air from hydronic system, and ensure tank is properly charged with air to suit system Project requirements.

3.7 TERMINAL EQUIPMENT CONNECTIONS

A. Sizes for supply and return piping connections shall be the same as or larger than equipment connections.

B. Install control valves in accessible locations close to connected equipment.

C. Install bypass piping with globe valve around control valve. If parallel control valves are installed, only one bypass is required.

D. Install ports for pressure gages and thermometers at coil inlet and outlet connections according to Division 15 Section "Meters and Gages."

3.8 FIELD QUALITY CONTROL

A. Prepare hydronic piping according to ASME B31.9 and as follows:

1. Leave joints, including welds, uninsulated and exposed for examination during test.
2. Provide temporary restraints for expansion joints that cannot sustain reactions due to test pressure. If temporary restraints are impractical, isolate expansion joints from testing.
3. Flush hydronic piping systems with clean water; then remove and clean or replace strainer screens.
4. Isolate equipment from piping. If a valve is used to isolate equipment, its closure shall be capable of sealing against test pressure without damage to valve. Install blinds in flanged joints to isolate equipment.

5. Install safety valve, set at a pressure no more than one-third higher than test pressure, to protect against damage by expanding liquid or other source of overpressure during test.

B. Perform the following tests on hydronic piping:

1. Use ambient temperature water as a testing medium unless there is risk of damage due to freezing. Another liquid that is safe for workers and compatible with piping may be used.
2. While filling system, use vents installed at high points of system to release air. Use drains installed at low points for complete draining of test liquid.
3. Isolate expansion tanks and determine that hydronic system is full of water.
4. Subject piping system to hydrostatic test pressure that is not less than 1.5 times the system's working pressure. Test pressure shall not exceed maximum pressure for any vessel, pump, valve, or other component in system under test. Verify that stress due to pressure at bottom of vertical runs does not exceed 90 percent of specified minimum yield strength or 1.7 times "SE" value in Appendix A in ASME B31.9, "Building Services Piping."
5. After hydrostatic test pressure has been applied for at least 10 minutes, examine piping, joints, and connections for leakage. Eliminate leaks by tightening, repairing, or replacing components, and repeat hydrostatic test until there are no leaks.
6. Prepare written report of testing.

C. Perform the following before operating the system:

1. Open manual valves fully.
2. Inspect pumps for proper rotation.
3. Set makeup pressure-reducing valves for required system pressure.
4. Inspect air vents at high points of system and determine if all are installed and operating freely (automatic type), or bleed air completely (manual type).
5. Set temperature controls so all coils are calling for full flow.
6. Inspect and set operating temperatures of hydronic equipment, such as boilers, chillers, cooling towers, to specified values.
7. Verify lubrication of motors and bearings.

END OF SECTION 15181

SECTION 15183
REFRIGERANT PIPING

PART 1 - GENERAL

1.1 RELATED DOCUMENTS

A. Drawings and general provisions of the Contract, including General and Supplementary Conditions and Division 1 Specification Sections, apply to this Section.

1.2 SUMMARY

A. This Section includes refrigerant piping used for air-conditioning applications.

1.3 PERFORMANCE REQUIREMENTS

A. Line Test Pressure for Refrigerant R-22:

1. Suction Lines for Air-Conditioning Applications: 185 psig.
2. Hot-Gas and Liquid Lines: 325 psig.

1.4 SUBMITTALS

A. Product Data: For each type of valve and refrigerant piping specialty indicated. Include pressure drop, based on manufacturer's test data, for the following:

1. Thermostatic expansion valves.
2. Solenoid valves.
3. Hot-gas bypass valves.
4. Filter dryers.
5. Strainers.
6. Pressure-regulating valves.

B. Welding certificates.

C. Field quality-control test reports.

D. Operation and Maintenance Data: For refrigerant valves and piping specialties to include in maintenance manuals.

1.5 QUALITY ASSURANCE

A. Welding: Qualify procedures and personnel according to ASME Boiler and Pressure Vessel Code: Section IX, "Welding and Brazing Qualifications."

B. Comply with ASHRAE 15, "Safety Code for Refrigeration Systems."

C. Comply with ASME B31.5, "Refrigeration Piping and Heat Transfer Components."

1.6 PRODUCT STORAGE AND HANDLING

A. Store piping in a clean and protected area with end caps in place to ensure that piping interior and exterior are clean when installed.

PART 2 - PRODUCTS

2.1 COPPER TUBE AND FITTINGS

A. Copper Tube: ASTM B 280, Type ACR.

B. Wrought-Copper Fittings: ASME B16.22.

C. Wrought-Copper Unions: ASME B16.22.

2.2 VALVES AND SPECIALTIES

A. Diaphragm Packless Valves:

1. Body and Bonnet: Forged brass or cast bronze; globe design with straight-through or angle pattern.
2. Diaphragm: Phosphor bronze and stainless steel with stainless-steel spring.
3. Operator: Rising stem and hand wheel.
4. Seat: Nylon.
5. End Connections: Socket, union, or flanged.
6. Working Pressure Rating: 500 psig.
7. Maximum Operating Temperature: 275 deg F.

B. Check Valves:

1. Body: Ductile iron, forged brass, or cast bronze; globe pattern.
2. Bonnet: Bolted ductile iron, forged brass, or cast bronze; or brass hex plug.
3. Piston: Removable polytetrafluoroethylene seat.
4. Closing Spring: Stainless steel.
5. Manual Opening Stem: Seal cap, plated-steel stem, and graphite seal.
6. End Connections: Socket, union, threaded, or flanged.
7. Maximum Opening Pressure: 0.50 psig.
8. Working Pressure Rating: 500 psig.
9. Maximum Operating Temperature: 275 deg F.

C. Service Valves:

1. Body: Forged brass with brass cap including key end to remove core.
2. Core: Removable ball-type check valve with stainless-steel spring.
3. Seat: Polytetrafluoroethylene.
4. End Connections: Copper spring.
5. Working Pressure Rating: 500 psig.

D. Solenoid Valves: Comply with ARI 760 and UL 429; listed and labeled by an NRTL.

1. Body and Bonnet: Plated steel.
2. Solenoid Tube, Plunger, Closing Spring, and Seat Orifice: Stainless steel.
3. Seat: Polytetrafluoroethylene.
4. End Connections: Threaded.
5. Electrical: Molded, watertight coil in NEMA 250 enclosure of type required by location with 1/2-inch conduit adapter, and 115-V ac coil.
6. Working Pressure Rating: 400 psig.
7. Maximum Operating Temperature: 240 deg F.
8. Manual operator.

E. Safety Relief Valves: Comply with ASME Boiler and Pressure Vessel Code; listed and labeled by an NRTL.

1. Body and Bonnet: Ductile iron and steel, with neoprene O-ring seal.
2. Piston, Closing Spring, and Seat Insert: Stainless steel.
3. Seat Disc: Polytetrafluoroethylene.
4. End Connections: Threaded.
5. Working Pressure Rating: 400 psig.
6. Maximum Operating Temperature: 240 deg F.

F. Thermostatic Expansion Valves: Comply with ARI 750.

1. Body, Bonnet, and Seal Cap: Forged brass or steel.
2. Diaphragm, Piston, Closing Spring, and Seat Insert: Stainless steel.
3. Packing and Gaskets: Non-asbestos.
4. Capillary and Bulb: Copper tubing filled with refrigerant charge.
5. Suction Temperature: 40 deg F.
6. Superheat: Nonadjustable.
7. Reverse-flow option (for heat-pump applications).
8. End Connections: Socket, flare, or threaded union.
9. Working Pressure Rating: 450 psig.

G. Straight-Type Strainers:

1. Body: Welded steel with corrosion-resistant coating.
2. Screen: 100-mesh stainless steel.
3. End Connections: Socket or flare.
4. Working Pressure Rating: 500 psig.
5. Maximum Operating Temperature: 275 deg F.

H. Angle-Type Strainers:

1. Body: Forged brass or cast bronze.
2. Drain Plug: Brass hex plug.
3. Screen: 100-mesh monel.
4. End Connections: Socket or flare.
5. Working Pressure Rating: 500 psig.
6. Maximum Operating Temperature: 275 deg F.

I. Moisture/Liquid Indicators:

1. Body: Forged brass.
2. Window: Replaceable, clear, fused glass window with indicating element protected by filter screen.
3. Indicator: Color coded to show moisture content in ppm.
4. Minimum Moisture Indicator Sensitivity: Indicate moisture above 60 ppm.
5. End Connections: Socket or flare.
6. Working Pressure Rating: 500 psig.
7. Maximum Operating Temperature: 240 deg F.

J. Replaceable-Core Filter Dryers: Comply with ARI 730.

1. Body and Cover: Painted-steel shell with ductile-iron cover, stainless-steel screws, and neoprene gaskets.
2. Filter Media: 10 micron, pleated with integral end rings; stainless-steel support.
3. Desiccant Media: Activated alumina.
4. End Connections: Socket.
5. Access Ports: NPS 1/4 connections at entering and leaving sides for pressure differential measurement.
6. Maximum Pressure Loss: 2 psig.
7. Working Pressure Rating: 500 psig.
8. Maximum Operating Temperature: 240 deg F.

K. Permanent Filter Dryers: Comply with ARI 730.

1. Body and Cover: Painted-steel shell.
2. Filter Media: 10 micron, pleated with integral end rings; stainless-steel support.
3. Desiccant Media: Activated alumina.
4. Designed for reverse flow (for heat-pump applications).
5. End Connections: Socket.
6. Access Ports: NPS 1/4 connections at entering and leaving sides for pressure differential measurement.
7. Maximum Pressure Loss: 2 psig.
8. Working Pressure Rating: 500 psig.
9. Maximum Operating Temperature: 240 deg F.

L. Mufflers:

1. Body: Welded steel with corrosion-resistant coating.
2. End Connections: Socket or flare.
3. Working Pressure Rating: 500 psig.
4. Maximum Operating Temperature: 275 deg F.

M. Receivers: Comply with ARI 495.

1. Comply with ASME Boiler and Pressure Vessel Code; listed and labeled by an NRTL.
2. Comply with UL 207; listed and labeled by an NRTL.
3. Body: Welded steel with corrosion-resistant coating.
4. Tappings: Inlet, outlet, liquid level indicator, and safety relief valve.
5. End Connections: Socket or threaded.
6. Working Pressure Rating: 500 psig.
7. Maximum Operating Temperature: 275 deg F.

N. Liquid Accumulators: Comply with ARI 495.

1. Body: Welded steel with corrosion-resistant coating.
2. End Connections: Socket or threaded.
3. Working Pressure Rating: 500 psig.
4. Maximum Operating Temperature: 275 deg F.

2.3 REFRIGERANTS

A. Manufacturers: Subject to compliance with requirements, provide products by one of the following:

1. Atofina Chemicals, Inc.
2. DuPont Company; Fluorochemicals Div.
3. Honeywell, Inc.; Genetron Refrigerants.
4. INEOS Fluor Americas LLC.

B. ASHRAE 34, R-22: Monochlorodifluoromethane.

PART 3 - EXECUTION

3.1 PIPING APPLICATIONS FOR REFRIGERANT R-22

A. Suction Lines NPS 1-1/2 and Smaller for Conventional Air-Conditioning Applications: Copper, Type ACR, annealed-temper tubing and wrought-copper fittings with brazed or soldered joints.

B. Safety-Relief-Valve Discharge Piping: Copper, Type ACR, drawn-temper tubing and wrought-copper fittings with soldered joints.

3.2 VALVE AND SPECIALTY APPLICATIONS

A. Install diaphragm packless or packed-angle valves in suction and discharge lines of compressor.

B. Install service valves for gage taps at inlet and outlet of hot-gas bypass valves and strainers if they are not an integral part of valves and strainers.

C. Install a check valve at the compressor discharge and a liquid accumulator at the compressor suction connection.

D. Except as otherwise indicated, install diaphragm packless or packed-angle valves on inlet and outlet side of filter dryers.

E. Install a full-sized, three-valve bypass around filter dryers.

F. Install solenoid valves upstream from each expansion valve and hot-gas bypass valve. Install solenoid valves in horizontal lines with coil at top.

G. Install thermostatic expansion valves as close as possible to distributors on evaporators.

1. Install valve so diaphragm case is warmer than bulb.
2. Secure bulb to clean, straight, horizontal section of suction line using two bulb straps. Do not mount bulb in a trap or at bottom of the line.
3. If external equalizer lines are required, make connection where it will reflect suction-line pressure at bulb location.

H. Install safety relief valves where required by ASME Boiler and Pressure Vessel Code. Pipe safety-relief-valve discharge line to outside according to ASHRAE 15.

I. Install moisture/liquid indicators in liquid line at the inlet of the thermostatic expansion valve or at the inlet of the evaporator coil capillary tube.

J. Install strainers upstream from and adjacent to the following unless they are furnished as an integral assembly for device being protected:

1. Solenoid valves.
2. Thermostatic expansion valves.
3. Hot-gas bypass valves.
4. Compressor.

K. Install filter dryers in liquid line between compressor and thermostatic expansion valve, and in the suction line at the compressor.

L. Install receivers sized to accommodate pump-down charge.

M. Install flexible connectors at compressors.

3.3 PIPING INSTALLATION

A. Drawing plans, schematics, and diagrams indicate general location and arrangement of piping systems; indicated locations and arrangements were used to size pipe and calculate friction loss,

expansion, pump sizing, and other design considerations. Install piping as indicated unless deviations to layout are approved on Shop Drawings.

B. Install refrigerant piping according to ASHRAE 15.

C. Install piping in concealed locations unless otherwise indicated and except in equipment rooms and service areas.

D. Install piping indicated to be exposed and piping in equipment rooms and service areas at right angles or parallel to building walls. Diagonal runs are prohibited unless specifically indicated otherwise.

E. Install piping above accessible ceilings to allow sufficient space for ceiling panel removal.

F. Install piping adjacent to machines to allow service and maintenance.

G. Install piping free of sags and bends.

H. Install fittings for changes in direction and branch connections.

I. Select system components with pressure rating equal to or greater than system operating pressure.

J. Refer to Division 15 Sections "HVAC Instrumentation and Controls" and "Sequence of Operation" for solenoid valve controllers, control wiring, and sequence of operation.

K. Install piping as short and direct as possible, with a minimum number of joints, elbows, and fittings.

L. Arrange piping to allow inspection and service of refrigeration equipment. Install valves and specialties in accessible locations to allow for service and inspection. Install access doors or panels as specified in Division 8 Section "Access Doors and Frames" if valves or equipment requiring maintenance is concealed behind finished surfaces.

M. Install refrigerant piping in protective conduit where installed belowground.

N. Install refrigerant piping in rigid or flexible conduit in locations where exposed to mechanical injury.

O. Slope refrigerant piping as follows:

1. Install horizontal hot-gas discharge piping with a uniform slope downward away from compressor.
2. Install horizontal suction lines with a uniform slope downward to compressor.
3. Install traps and double risers to entrain oil in vertical runs.
4. Liquid lines may be installed level.

P. When brazing or soldering, remove solenoid-valve coils and sight glasses; also remove valve stems, seats, and packing, and accessible internal parts of refrigerant specialties. Do not apply heat near expansion-valve bulb.

Q. Install pipe sleeves at penetrations in exterior walls and floor assemblies.

R. Seal penetrations through fire and smoke barriers according to Division 7 Section "Through-Penetration Firestop Systems."

S. Install piping with adequate clearance between pipe and adjacent walls and hangers or between pipes for insulation installation.

T. Install sleeves through floors, walls, or ceilings, sized to permit installation of full-thickness insulation.

U. Seal pipe penetrations through exterior walls according to Division 7 Section "Joint Sealants" for materials and methods.

V. Identify refrigerant piping and valves according to Division 15 Section "Mechanical Identification."

3.4 PIPE JOINT CONSTRUCTION

A. Ream ends of pipes and tubes and remove burrs. Bevel plain ends of steel pipe.

B. Remove scale, slag, dirt, and debris from inside and outside of pipe and fittings before assembly.

C. Fill pipe and fittings with an inert gas (nitrogen or carbon dioxide), during brazing or welding, to prevent scale formation.

D. Soldered Joints: Construct joints according to ASTM B 828 or CDA's "Copper Tube Handbook."

E. Brazed Joints: Construct joints according to AWS's "Brazing Handbook," Chapter "Pipe and Tube."

1. Use Type BcuP, copper-phosphorus alloy for joining copper socket fittings with copper pipe.
2. Use Type BAg, cadmium-free silver alloy for joining copper with bronze or steel.

F. Threaded Joints: Thread steel pipe with tapered pipe threads according to ASME B1.20.1. Cut threads full and clean using sharp dies. Ream threaded pipe ends to remove burrs and restore full ID. Join pipe fittings and valves as follows:

1. Apply appropriate tape or thread compound to external pipe threads unless dry-seal threading is specified.
2. Damaged Threads: Do not use pipe or pipe fittings with threads that are corroded or damaged. Do not use pipe sections that have cracked or open welds.

G. Welded Joints: Construct joints according to AWS D10.12/D10.12M.

H. Flanged Joints: Select appropriate gasket material, size, type, and thickness for service application. Install gasket concentrically positioned. Use suitable lubricants on bolt threads.

3.5 HANGERS AND SUPPORTS

A. Hanger, support, and anchor products are specified in Division 15 Section "Hangers and Supports."

B. Install the following pipe attachments:

1. Adjustable steel clevis hangers for individual horizontal runs less than 20 feet long.
2. Roller hangers and spring hangers for individual horizontal runs 20 feet or longer.
3. Pipe Roller: MSS SP-58, Type 44 for multiple horizontal piping 20 feet or longer, supported on a trapeze.
4. Spring hangers to support vertical runs.
5. Copper-clad hangers and supports for hangers and supports in direct contact with copper pipe.

C. Install hangers for copper tubing with the following maximum spacing and minimum rod sizes:

1. NPS 1/2: Maximum span, 60 inches; minimum rod size, 1/4 inch.
2. NPS 5/8: Maximum span, 60 inches; minimum rod size, 1/4 inch.
3. NPS 1: Maximum span, 72 inches; minimum rod size, 1/4 inch.
4. NPS 1-1/4: Maximum span, 96 inches; minimum rod size, 3/8 inch.
5. NPS 1-1/2: Maximum span, 96 inches; minimum rod size, 3/8 inch.

3.6 FIELD QUALITY CONTROL

A. Perform tests and inspections and prepare test reports.

B. Tests and Inspections:

1. Comply with ASME B31.5, Chapter VI.
2. Test refrigerant piping, specialties, and receivers. Isolate compressor, condenser, evaporator, and safety devices from test pressure if they are not rated above the test pressure.
3. Test high- and low-pressure side piping of each system separately at not less than the pressures indicated in Part 1 "Performance Requirements" Article.

    a. Fill system with nitrogen to the required test pressure.
    b. System shall maintain test pressure at the manifold gage throughout duration of test.
    c. Test joints and fittings with electronic leak detector or by brushing a small amount of soap and glycerin solution over joints.
    d. Remake leaking joints using new materials, and retest until satisfactory results are achieved.

3.7 SYSTEM CHARGING

A. Charge system using the following procedures:

1. Install core in filter dryers after leak test but before evacuation.

2. Evacuate entire refrigerant system with a vacuum pump to 500 micrometers. If vacuum holds for 12 hours, system is ready for charging.
3. Break vacuum with refrigerant gas, allowing pressure to build up to 2 psig.
4. Charge system with a new filter-dryer core in charging line.

3.8 ADJUSTING

A. Adjust thermostatic expansion valve to obtain proper evaporator superheat.

B. Adjust high- and low-pressure switch settings to avoid short cycling in response to fluctuating suction pressure.

C. Adjust set-point temperature of air-conditioning or chilled-water controllers to the system design temperature.

D. Perform the following adjustments before operating the refrigeration system, according to manufacturer's written instructions:

1. Open shutoff valves in condenser water circuit.
2. Verify that compressor oil level is correct.
3. Open compressor suction and discharge valves.
4. Open refrigerant valves except bypass valves that are used for other purposes.
5. Check open compressor-motor alignment and verify lubrication for motors and bearings.

E. Replace core of replaceable filter dryer after system has been adjusted and after design flow rates and pressures are established.

END OF SECTION 15183

SECTION 15185
HYDRONIC PUMPS

PART 1 - GENERAL

1.1 RELATED DOCUMENTS

A. Drawings and general provisions of the Contract, including General and Supplementary Conditions and Division 1 Specification Sections, apply to this Section.

1.2 SUMMARY

A. This Section includes the following:

1. Separately coupled, horizontal, in-line centrifugal pumps.
2. Separately coupled, base-mounted, end-suction centrifugal pumps.

1.3 SUBMITTALS

A. Product Data: Include certified performance curves and rated capacities, operating characteristics, furnished specialties, final impeller dimensions, and accessories for each type of product indicated. Indicate pump's operating point on curves.

B. Operation and Maintenance Data: For pumps to include in emergency, operation, and maintenance manuals.

1.4 QUALITY ASSURANCE

A. Electrical Components, Devices, and Accessories: Listed and labeled as defined in NFPA 70, Article 100, by a testing agency acceptable to authorities having jurisdiction, and marked for intended use.

B. UL Compliance: Comply with UL 778 for motor-operated water pumps.

1.5 DELIVERY, STORAGE, AND HANDLING

A. Manufacturer's Preparation for Shipping: Clean flanges and exposed machined metal surfaces and treat with anticorrosion compound after assembly and testing. Protect flanges, pipe openings, and nozzles with wooden flange covers or with screwed-in plugs.

B. Store pumps in dry location.

C. Retain protective covers for flanges and protective coatings during storage.

D. Protect bearings and couplings against damage from sand, grit, and other foreign matter.

E. Comply with pump manufacturer's written rigging instructions.

1.6 COORDINATION

A. Coordinate size and location of concrete bases. Cast anchor-bolt inserts into bases. Concrete, reinforcement, and formwork requirements are specified in Division 3.

1.7 EXTRA MATERIALS

A. Furnish extra materials described below that match products installed and that are packaged with protective covering for storage and identified with labels describing contents.

1. Mechanical Seals: One mechanical seal for each pump.

PART 2 - PRODUCTS

2.1 MANUFACTURERS

A. In other Part 2 articles where titles below introduce lists, the following requirements apply to product selection:

1. Manufacturers: Subject to compliance with requirements, provide products by one of the manufacturers specified.

2.2 SEPARATELY COUPLED, HORIZONTAL, IN-LINE CENTRIFUGAL PUMPS

A. Manufacturers:

1. Bell & Gossett; Div. of ITT Industries.
2. Taco, Inc.

B. Description: Factory-assembled and -tested, centrifugal, overhung-impeller, separately coupled, in-line pump as defined in HI 1.1-1.2 and HI 1.3; designed for installation with pump and motor shafts mounted horizontally. Rate pump for 125-psig minimum working pressure and a continuous water temperature of 225 deg F.

C. Pump Construction:

1. Casing: Radially split, cast iron, with threaded gage tappings at inlet and outlet, and threaded companion-flange connections.
2. Impeller: ASTM B 584, cast bronze; statically and dynamically balanced, and keyed to shaft. Trim impeller to match specified performance.
3. Pump Shaft: Stainless steel.

4. Mechanical Seal: Carbon rotating ring against a ceramic seat held by a stainless-steel spring, and Buna-N bellows and gasket. Include water slinger on shaft between motor and seal.
5. Pump Bearings: Oil lubricated; bronze-journal or thrust type.

D. Shaft Coupling: Molded rubber insert with interlocking spider or Interlocking frame with interconnecting springs capable of absorbing vibration.

E. Motor: Single speed, with oil-lubricated sleeve bearings, unless otherwise indicated; and resiliently mounted to pump casing. Comply with requirements in Division 15 Section "Motors."

2.3 SEPARATELY COUPLED, BASE-MOUNTED, END-SUCTION CENTRIFUGAL PUMPS

A. Manufacturers:

1. Bell & Gossett; Div. of ITT Industries.
2. Taco, Inc.

B. Description: Factory-assembled and -tested, centrifugal, overhung-impeller, separately coupled, end-suction pump as defined in HI 1.1-1.2 and HI 1.3; designed for base mounting, with pump and motor shafts horizontal. Rate pump for 175-psig minimum working pressure and a continuous water temperature of 225 deg F.

C. Pump Construction:

1. Casing: Radially split, cast iron, with replaceable bronze wear rings, threaded gage tappings at inlet and outlet, drain plug at bottom and air vent at top of volute, and threaded companion-flange or flanged connections. Provide integral mount on volute to support the casing, and attached piping to allow removal and replacement of impeller without disconnecting piping or requiring the realignment of pump and motor shaft.
2. Impeller: ASTM B 584, cast bronze; statically and dynamically balanced, keyed to shaft, and secured with a locking cap screw. Trim impeller to match specified performance.
3. Pump Shaft: Steel, with copper-alloy shaft sleeve.
4. Mechanical Seal: Carbon rotating ring against a ceramic seat held by a stainless-steel spring, and EPT bellows and gasket.
5. Packing Seal: Stuffing box, with a minimum of four rings of graphite-impregnated braided yarn with bronze lantern ring between center two graphite rings, and bronze packing gland.
6. Pump Bearings: Grease-lubricated ball bearings contained in cast-iron housing with grease fittings.

D. Shaft Coupling: Molded rubber insert and interlocking spider capable of absorbing vibration. Couplings shall be drop-out type to allow disassembly and removal without removing pump shaft or motor.

E. Coupling Guard: Dual rated; ANSI B15.1, Section 8; OSHA 1910.219 approved; steel; removable; attached to mounting frame.

F. Mounting Frame: Welded-steel frame and cross members, factory fabricated from ASTM A 36/A 36M channels and angles. Fabricate to mount pump casing, coupling guard, and motor.

2.4 PUMP SPECIALTY FITTINGS

A. Suction Diffuser: Angle pattern, 175-psig pressure rating, cast-iron body and end cap, pump-inlet fitting; with bronze startup and bronze or stainless-steel permanent strainers; bronze or stainless-steel straightening vanes; drain plug; and factory-fabricated support.

B. Triple-Duty Valve: Angle or straight pattern, 175-psig pressure rating, cast-iron body, pump-discharge fitting; with drain plug and bronze-fitted shutoff, balancing, and check valve features. Brass gage ports with integral check valve, and orifice for flow measurement.

PART 3 - EXECUTION

3.1 EXAMINATION

A. Examine equipment foundations and anchor-bolt locations for compliance with requirements for installation tolerances and other conditions affecting performance of work.

B. Examine roughing-in for piping systems to verify actual locations of piping connections before pump installation.

C. Examine foundations and inertia bases for suitable conditions where pumps are to be installed.

D. Proceed with installation only after unsatisfactory conditions have been corrected.

3.2 CONCRETE BASES

A. Install concrete bases of dimensions indicated for pumps and controllers. Refer to Division 15 Section "Basic Mechanical Materials and Methods."

1. Install dowel rods to connect concrete base to concrete floor. Unless otherwise indicated, install dowel rods on 18-inch centers around full perimeter of base.
2. For supported equipment, install epoxy-coated anchor bolts that extend through concrete base and anchor into structural concrete floor.
3. Place and secure anchorage devices. Use setting drawings, templates, diagrams, instructions, and directions furnished with items to be embedded.
4. Install anchor bolts to elevations required for proper attachment to supported equipment.

B. Cast-in-place concrete materials and placement requirements are specified in Division 3.

3.3 PUMP INSTALLATION

A. Comply with HI 1.4.

B. Install pumps with access for periodic maintenance including removal of motors, impellers, couplings, and accessories.

C. Independently support pumps and piping so weight of piping is not supported by pumps and weight of pumps is not supported by piping.

D. Install continuous-thread hanger rods and of sufficient size to support pump weight. Vibration isolation devices are specified in Division 15 Section "Mechanical Vibration and Seismic Controls." Fabricate brackets or supports as required. Hanger and support materials are specified in Division 15 Section "Hangers and Supports."

E. Set base-mounted pumps on concrete foundation. Disconnect coupling before setting. Do not reconnect couplings until alignment procedure is complete.

1. Support pump baseplate on rectangular metal blocks and shims, or on metal wedges with small taper, at points near foundation bolts to provide a gap of 3/4 to 1-1/2 inches between pump base and foundation for grouting.
2. Adjust metal supports or wedges until pump and driver shafts are level. Check coupling faces and suction and discharge flanges of pump to verify that they are level and plumb.

3.4 ALIGNMENT

A. Align pump and motor shafts and piping connections after setting on foundation, grout has been set and foundation bolts have been tightened, and piping connections have been made.

B. Comply with pump and coupling manufacturers' written instructions.

C. Adjust pump and motor shafts for angular and offset alignment by methods specified in HI 1.1-1.5, "Centrifugal Pumps for Nomenclature, Definitions, Application and Operation."

D. After alignment is correct, tighten foundation bolts evenly but not too firmly. Completely fill baseplate with nonshrink, nonmetallic grout while metal blocks and shims or wedges are in place. After grout has cured, fully tighten foundation bolts.

3.5 CONNECTIONS

A. Piping installation requirements are specified in other Division 15 Sections. Drawings indicate general arrangement of piping, fittings, and specialties.

B. Install piping adjacent to machine to allow service and maintenance.

C. Connect piping to pumps. Install valves that are same size as piping connected to pumps.

D. Install suction and discharge pipe sizes equal to or greater than diameter of pump nozzles.

E. Install check valve and throttling or triple-duty valve on discharge side of pumps.

F. Install Y-type strainer or suction diffuser and shutoff valve on suction side of pumps.

G. Install flexible connectors on suction and discharge sides of base-mounted pumps between pump casing and valves.

H. Install pressure gages on pump suction and discharge, at integral pressure-gage tapping, or install single gage with multiple input selector valve.

I. Install check valve and gate or ball valve on each condensate pump unit discharge.

J. Install electrical connections for power, controls, and devices.

K. Ground equipment according to Division 16 Section "Grounding and Bonding."

L. Connect wiring according to Division 16 Section "Conductors and Cables."

3.6 STARTUP SERVICE

A. Engage a factory-authorized service representative to perform startup service.

1. Complete installation and startup checks according to manufacturer's written instructions.
2. Check piping connections for tightness.
3. Clean strainers on suction piping.
4. Perform the following startup checks for each pump before starting:

    a. Verify bearing lubrication.
    b. Verify that pump is free to rotate by hand and that pump for handling hot liquid is free to rotate with pump hot and cold. If pump is bound or drags, do not operate until cause of trouble is determined and corrected.
    c. Verify that pump is rotating in the correct direction.

5. Prime pump by opening suction valves and closing drains, and prepare pump for operation.
6. Start motor.
7. Open discharge valve slowly.

3.7 DEMONSTRATION

A. Engage a factory-authorized service representative to train Owner's maintenance personnel to adjust, operate, and maintain hydronic pumps. Refer to Division 1 Section "Closeout Procedures."

END OF SECTION 15185

SECTION 15189
HVAC WATER TREATMENT

PART 1 - GENERAL

1.1 RELATED DOCUMENTS

A. Drawings and general provisions of the Contract, including General and Supplementary Conditions and Division 1 Specification Sections, apply to this Section.

1.2 SUMMARY

A. This Section includes the following HVAC water-treatment systems:

1. Bypass chemical-feed equipment and controls.
2. Chemical treatment test equipment.
3. HVAC water-treatment chemicals.

1.3 DEFINITIONS

A. TDS: Total dissolved solids.

1.4 PERFORMANCE REQUIREMENTS

A. Water quality for HVAC systems shall minimize corrosion, scale buildup, and biological growth for optimum efficiency of HVAC equipment without creating a hazard to operating personnel or the environment.

B. Base HVAC water treatment on quality of water available at Project site, HVAC system equipment material characteristics and functional performance characteristics, operating personnel capabilities, and requirements and guidelines of authorities having jurisdiction.

C. Closed hydronic systems, including hot-water heating and chilled water, shall have the following water qualities:

1. pH: Maintain a value within 9.0 to 10.5.
2. "P" Alkalinity: Maintain a value within 100 to 500 ppm.
3. Boron: Maintain a value within 100 to 200 ppm.
4. Chemical Oxygen Demand: Maintain a maximum value of 100 ppm.
5. Soluble Copper: Maintain a maximum value of 0.20 ppm.
6. TDS: Maintain a maximum value of 10 ppm.

7. Ammonia: Maintain a maximum value of 20 ppm.
8. Free Caustic Alkalinity: Maintain a maximum value of 20 ppm.
9. Microbiological Limits:

    a. Total Aerobic Plate Count: Maintain a maximum value of 1000 organisms/ml.
    b. Total Anaerobic Plate Count: Maintain a maximum value of 100 organisms/ml.
    c. Nitrate Reducers: Maintain a maximum value of 100 organisms/ml.
    d. Sulfate Reducers: Maintain a maximum value of 0 organisms/ml.
    e. Iron Bacteria: Maintain a maximum value of 0 organisms/ml.

1.5 SUBMITTALS

A. Product Data: Include rated capacities, operating characteristics, furnished specialties, and accessories for the following products:

1. Bypass feeders.
2. Water meters.
3. Chemical test equipment.
4. Chemical material safety data sheets.

B. Field quality-control test reports.

C. Other Informational Submittals:

1. Water Analysis: Illustrate water quality available at Project site.

1.6 QUALITY ASSURANCE

A. HVAC Water-Treatment Service Provider Qualifications: An experienced HVAC water-treatment service provider capable of analyzing water qualities, installing water-treatment equipment, and applying water treatment as specified in this Section.

B. Electrical Components, Devices, and Accessories: Listed and labeled as defined in NFPA 70, Article 100, by a testing agency acceptable to authorities having jurisdiction, and marked for intended use.

PART 2 - PRODUCTS

2.1 MANUFACTURERS

A. Manufacturers: Subject to compliance with requirements, provide products by one of the following:

1. Enerco.

2.2 MANUAL CHEMICAL-FEED EQUIPMENT

A. Bypass Feeders: Steel, with corrosion-resistant exterior coating, minimum 3-1/2-inch fill opening in the top, and NPS 3/4 bottom inlet and top side outlet. Quarter turn or threaded fill cap with gasket seal and diaphragm to lock the top on the feeder when exposed to system pressure in the vessel.

1. Capacity: 5 gal..
2. Minimum Working Pressure: 125 psig.

2.3 AUTOMATIC CHEMICAL-FEED EQUIPMENT

A. Water Meter:

1. AWWA C700, oscillating-piston, magnetic-drive, totalization meter.
2. Body: Bronze.
3. Minimum Working-Pressure Rating: 150 psig.
4. Maximum Pressure Loss at Design Flow: 3 psig.
5. Registration: Gallons or cubic feet.
6. End Connections: Threaded.
7. Controls: Flow-control switch with normally open contacts; rated for maximum 10 A, 250-V ac; and that will close at adjustable increments of total flow.

2.4 CHEMICAL TREATMENT TEST EQUIPMENT

A. Test Kit: Manufacturer-recommended equipment and chemicals in a wall-mounting cabinet for testing pH, TDS, inhibitor, chloride, alkalinity, and hardness; sulfite and testable polymer tests for high-pressure boilers, and oxidizing biocide test for open cooling systems.

B. Sample Cooler:

1. Tube: Sample.

a. Size: NPS 1/4 tubing.
b. Material: ASTM A 666, Type 316 stainless steel.
c. Pressure Rating: Minimum 2000 psig.
d. Temperature Rating: Minimum 850 deg F.

2. Shell: Cooling water.

a. Material: ASTM A 666, Type 304 stainless steel.
b. Pressure Rating: Minimum 250 psig.
c. Temperature Rating: Minimum 450 deg F.

3. Capacities and Characteristics:

a. Tube: Sample.

1) Flow Rate: 0.25 gpm.
2) Entering Temperature: 400 deg F.

3) Leaving Temperature: 88 deg F.
4) Pressure Loss: 6.5 psig.

b. Shell: Cooling water.

1) Flow Rate: 3 gpm.
2) Entering Temperature: 70 deg F.
3) Pressure Loss: 1.0 psig.

C. Corrosion Test-Coupon Assembly: Constructed of corrosive-resistant material, complete with piping, valves, and mild steel and copper coupons. Locate copper coupon downstream from mild steel coupon in the test-coupon assembly.

1. Two-station rack for closed-loop systems.

2.5 CHEMICALS

A. Chemicals shall be as recommended by water-treatment system manufacturer that are compatible with piping system components and connected equipment, and that can attain water quality specified in Part 1 "Performance Requirements" Article.

PART 3 - EXECUTION

3.1 WATER ANALYSIS

A. Perform an analysis of supply water to determine quality of water available at Project site.

3.2 INSTALLATION

A. Install chemical application equipment on concrete bases, level and plumb. Maintain manufacturer's recommended clearances. Arrange units so controls and devices that require servicing are accessible. Anchor chemical tanks and floor-mounting accessories to substrate.

B. Install water-testing equipment on wall near water chemical application equipment.

C. Install interconnecting control wiring for chemical treatment controls and sensors.

D. Mount sensors and injectors in piping circuits.

E. Bypass Feeders: Install in closed hydronic systems, including hot-water heating and chilled water, and equipped with the following:

1. Install bypass feeder in a bypass circuit around circulating pumps, unless otherwise indicated on Drawings.
2. Install water meter in makeup water supply.
3. Install test-coupon assembly in bypass circuit around circulating pumps, unless otherwise indicated on Drawings.

4. Install a gate or full-port ball isolation valves on inlet, outlet, and drain below feeder inlet.
5. Install a swing check on inlet after the isolation valve.

3.3 CONNECTIONS

A. Piping installation requirements are specified in other Division 15 Sections. Drawings indicate general arrangement of piping, fittings, and specialties.

B. Install piping adjacent to equipment to allow service and maintenance.

C. Make piping connections between HVAC water-treatment equipment and dissimilar-metal piping with dielectric fittings. Dielectric fittings are specified in Division 15 Section "Basic Mechanical Materials and Methods."

D. Install shutoff valves on HVAC water-treatment equipment inlet and outlet. Metal general-duty valves are specified in Division 15 Section "Valves."

E. Refer to Division 15 Section "Domestic Water Piping Specialties" for backflow preventers required in makeup water connections to potable-water systems.

F. Confirm applicable electrical requirements in Division 16 Sections for connecting electrical equipment.

G. Ground equipment according to Division 16 Section "Grounding and Bonding."

H. Connect wiring according to Division 16 Section "Conductors and Cables."

3.4 FIELD QUALITY CONTROL

A. Manufacturer's Field Service: Engage a factory-authorized service representative to inspect, test, and adjust components, assemblies, and equipment installations, including connections. Report results in writing.

B. Tests and Inspections:

1. Inspect field-assembled components and equipment installation, including piping and electrical connections.
2. Inspect piping and equipment to determine that systems and equipment have been cleaned, flushed, and filled with water, and are fully operational before introducing chemicals for water-treatment system.
3. Place HVAC water-treatment system into operation and calibrate controls during the preliminary phase of HVAC systems' startup procedures.
4. Do not enclose, cover, or put piping into operation until it is tested and satisfactory test results are achieved.
5. Test for leaks and defects. If testing is performed in segments, submit separate report for each test, complete with diagram of portion of piping tested.

6. Leave uncovered and unconcealed new, altered, extended, and replaced water piping until it has been tested and approved. Expose work that has been covered or concealed before it has been tested and approved.
7. Cap and subject piping to static water pressure of 50 psig above operating pressure, without exceeding pressure rating of piping system materials. Isolate test source and allow test pressure to stand for four hours. Leaks and loss in test pressure constitute defects.
8. Repair leaks and defects with new materials and retest piping until no leaks exist.

C. Remove and replace malfunctioning units and retest as specified above.

D. Comply with ASTM D 3370 and with the following standards:

1. Silica: ASTM D 859.
2. Steam System: ASTM D 1066.
3. Acidity and Alkalinity: ASTM D 1067.
4. Iron: ASTM D 1068.
5. Water Hardness: ASTM D 1126.

END OF SECTION 15189

SECTION 15410
PLUMBING FIXTURES

PART 1 - GENERAL

1.1 RELATED DOCUMENTS

A. Drawings and general provisions of the Contract, including General and Supplementary Conditions and Division 1 Specification Sections, apply to this Section.

1.2 SUMMARY

A. This Section includes the following conventional plumbing fixtures and related components:

1. Faucets for lavatories, showers and sinks.
2. Laminar-flow faucet-spout outlets.
3. Flushometers.
4. Toilet seats.
5. Protective shielding guards.
6. Fixture supports.
7. Dishwasher air-gap fittings.
8. Water closets.
9. Lavatories.
10. Commercial sinks.
11. Showers.

B. Related Sections include the following:

1. Division 10 Section "Toilet and Bath Accessories".
2. Division 15 Section "Drinking Fountains and Water Coolers."
3. Division 15 Section "Plumbing Specialties" for backflow preventers, floor drains, and specialty fixtures not included in this Section.

1.3 DEFINITIONS

A. ABS: Acrylonitrile-butadiene-styrene plastic.

B. Accessible Fixture: Plumbing fixture that can be approached, entered, and used by people with disabilities.

C. Cast Polymer: Cast-filled-polymer-plastic material. This material includes cultured-marble and solid-surface materials.

D. Cultured Marble: Cast-filled-polymer-plastic material with surface coating.

E. Fitting: Device that controls the flow of water into or out of the plumbing fixture. Fittings specified in this Section include supplies and stops, faucets and spouts, shower heads and tub spouts, drains and tailpieces, and traps and waste pipes. Piping and general-duty valves are included where indicated.

F. FRP: Fiberglass-reinforced plastic.

G. PVC: Polyvinyl chloride plastic.

H. Solid Surface: Nonporous, homogeneous, cast-polymer-plastic material with heat-, impact-, scratch-, and stain-resistance qualities.

1.4 SUBMITTALS

A. Product Data: For each type of plumbing fixture indicated. Include selected fixture and trim, fittings, accessories, appliances, appurtenances, equipment, and supports. Indicate materials and finishes, dimensions, construction details, and flow-control rates.

B. Operation and Maintenance Data: For plumbing fixtures to include in emergency, operation, and maintenance manuals.

C. Warranty: Special warranty specified in this Section.

1.5 QUALITY ASSURANCE

A. Source Limitations: Obtain plumbing fixtures, faucets, and other components of each category through one source from a single manufacturer.

1. Exception: If fixtures, faucets, or other components are not available from a single manufacturer, obtain similar products from other manufacturers specified for that category.

B. Regulatory Requirements: Comply with requirements in ICC A117.1, "Accessible and Usable Buildings and Facilities"; Public Law 90-480, "Architectural Barriers Act"; and Public Law 101-336, "Americans with Disabilities Act"; for plumbing fixtures for people with disabilities.

C. Regulatory Requirements: Comply with requirements in Public Law 102-486, "Energy Policy Act," about water flow and consumption rates for plumbing fixtures.

D. NSF Standard: Comply with NSF 61, "Drinking Water System Components--Health Effects," for fixture materials that will be in contact with potable water.

E. Select combinations of fixtures and trim, faucets, fittings, and other components that are compatible.

F. Comply with the following applicable standards and other requirements specified for plumbing fixtures:

1. Stainless-Steel Commercial Sinks: NSF 2 construction.

2. Vitreous-China Fixtures: ASME A112.19.2M.

G. Comply with the following applicable standards and other requirements specified for sink faucets:

1. Faucets: ASME A112.18.1.
2. Hose-Connection Vacuum Breakers: ASSE 1011.
3. Hose-Coupling Threads: ASME B1.20.7.
4. Integral, Atmospheric Vacuum Breakers: ASSE 1001.
5. NSF Potable-Water Materials: NSF 61.
6. Pipe Threads: ASME B1.20.1.
7. Supply Fittings: ASME A112.18.1.
8. Brass Waste Fittings: ASME A112.18.2.

H. Comply with the following applicable standards and other requirements specified for shower faucets:

1. Backflow Protection Devices for Hand-Held Showers: ASME A112.18.3M.
2. Faucets: ASME A112.18.1.
3. Hand-Held Showers: ASSE 1014.
4. High-Temperature-Limit Controls for Thermal-Shock-Preventing Devices: ASTM F 445.
5. Hose-Coupling Threads: ASME B1.20.7.
6. Manual-Control Antiscald Faucets: ASTM F 444.
7. Pipe Threads: ASME B1.20.1.
8. Thermostatic-Control Antiscald Faucets: ASTM F 444 and ASSE 1016.

I. Comply with the following applicable standards and other requirements specified for miscellaneous fittings:

1. Atmospheric Vacuum Breakers: ASSE 1001.
2. Brass and Copper Supplies: ASME A112.18.1.
3. Manual-Operation Flushometers: ASSE 1037.
4. Brass Waste Fittings: ASME A112.18.2.

J. Comply with the following applicable standards and other requirements specified for miscellaneous components:

1. Grab Bars: ASTM F 446.
2. Hose-Coupling Threads: ASME B1.20.7.
3. Off-Floor Fixture Supports: ASME A112.6.1M.
4. Pipe Threads: ASME B1.20.1.
5. Plastic Toilet Seats: ANSI Z124.5.
6. Supply and Drain Protective Shielding Guards: ICC A117.1.

1.6 EXTRA MATERIALS

A. Furnish extra materials described below that match products installed and that are packaged with protective covering for storage and identified with labels describing contents.

1. Faucet Cartridges and O-Rings: Equal to 5 percent of amount of each type and size installed.
2. Flushometer Valve, Repair Kits: One (1) of each type installed.

PART 2 - PRODUCTS

2.1 LAVATORY FAUCETS

A. Lavatory Faucets, Type 1:

1. Basis-of-Design Product: Subject to compliance with requirements, provide Chicago Faucet Model No. 2200-4E2805CP or a comparable product by one of the following:

    a. American Standard Companies, Inc.
    b. Chicago Faucets.
    c. Delta Faucet Company.
    d. Eljer.
    e. Kohler Co.
    f. Speakman Company.
    g. T & S Brass and Bronze Works, Inc.
    h. Zurn Plumbing Products Group; Commercial Brass Operation.

2. Description: Single-control mixing valve. Include hot- and cold-water indicators; coordinate faucet inlets with supplies and fixture holes; coordinate outlet with spout and fixture receptor.
3. Body Material: Commercial, solid brass.
4. Finish: Polished chrome plate.
5. Maximum Flow Rate: 0.5 gpm.
6. Centers: 4 inches.
7. Mounting: Deck, exposed.
8. Valve Handle(s): Lever.
9. Inlets: NPS 3/8 tubing, plain end.
10. Spout: Rigid type.
11. Spout Outlet: Vandal resistant aerator.
12. Operation: Non-compression, manual.
13. Drain: Grid
14. Tempering Device: Required, (MV-1).

2.2 SINK FAUCETS

A. Sink Faucet, Type 1:

1. Basis-of-Design Product: Subject to compliance with requirements, provide Chicago Faucet Model No. 1100-GN2AE3-317CP or a comparable product by one of the following:

    a. Chicago Faucet Co.
    b. Cambridge Brass; Div. Of Masco Corp.
    c. Delta Faucet Co.; Div. Of Masco Corp.

d. Elkay Manufacturing Co.
e. Just Manufacturing Co.
f. T & S Brass and Bronze Works, Inc.

2. Maximum Flow Rate: 2.5 gpm, unless otherwise indicated.
3. Body Material: Cast brass.
4. Finish: Polished chrome plate.
5. Type: Kitchen sink faucet.
6. Mixing Valve: Two-lever handle.
7. Centers: 8-inches.
8. Mounting: Deck, exposed.
9. Handle[s]: Lever.
10. Inlet[s]: NPS 3/8 plain-end tubing.
11. Spout: Restricted swing gooseneck.
12. Spout Outlet: Aerator.
13. Vacuum Breaker: Not required.
14. Operation: Non-compression, manual.
15. Drain: Not required.
16. Tempering Device: Required for accessible sinks only.

2.3 FLUSHOMETERS

A. Flushometers, Type 1:

1. Manufacturers: Subject to compliance with requirements, provide products by one of the following:

a. Sloan Valve Company.
b. Zurn.

2. Description: Flushometer for water-closet-type fixture. Include brass body with corrosion-resistant internal components, non-hold-open feature, control stop with check valve, vacuum breaker, copper or brass tubing, and polished chrome-plated finish on exposed parts.

a. Internal Design: Diaphragm operation.
b. Style: Exposed.
c. Inlet Size: NPS 1.
d. Trip Mechanism: Manual lever actuator.
e. Consumption: 1.6 gal./flush.
f. Tailpiece Size: NPS 1-1/4 and standard length to top of bowl.

2.4 TOILET SEATS

A. Toilet Seats, Type 1:

1. Manufacturers: Subject to compliance with requirements, provide products by one of the following:

a. American Standard Companies, Inc.

b. Bemis Manufacturing Company.
c. Centoco Manufacturing Corp.
d. Church Seats.
e. Eljer.
f. Kohler Co.
g. Olsonite Corp.

2. Description: Toilet seat for water-closet-type fixture.

a. Material: Molded, solid plastic.
b. Configuration: Open front without cover.
c. Size: Elongated.
d. Hinge Type: CK, check.
e. Class: Heavy-duty commercial.
f. Color: White.

2.5 PROTECTIVE SHIELDING GUARDS

A. Protective Shielding Pipe Enclosures:

1. Manufacturers: Subject to compliance with requirements, provide products by one of the following:

a. Plumberek
b. TRUEBRO, Inc.

2. Description: Manufactured plastic enclosure for covering plumbing fixture hot- and cold-water supplies and trap and drain piping. Comply with ADA requirements.

2.6 FIXTURE SUPPORTS

A. Manufacturers: Subject to compliance with requirements, provide products by one of the following:

1. Josam Company.
2. MIFAB Manufacturing Inc.
3. Smith, Jay R. Mfg. Co.
4. Tyler Pipe; Wade Div.
5. Watts Drainage Products Inc.; a div. of Watts Industries, Inc.
6. Zurn Plumbing Products Group; Specification Drainage Operation.

B. Lavatory Supports:

1. Description: Type II, lavatory carrier with concealed arms and tie rod for wall-mounting, lavatory-type fixture. Include steel uprights with feet.
2. Accessible-Fixture Support: Include rectangular steel uprights.

2.7 DISHWASHER AIR-GAP FITTINGS

A. Dishwasher Air-Gap Fittings, Type 1:

1. Manufacturers: Subject to compliance with requirements, provide products by one of the following:

    a. Brass Craft Mfg. Co.; a Subsidiary of Masco Corporation.
    b. Geberit Manufacturing, Inc.
    c. Sioux Chief Manufacturing Company, Inc.
    d. Watts Brass & Tubular; a division of Watts Regulator Co.

2. Description: Fitting suitable for use with domestic dishwashers and for deck mounting; with plastic body, chrome-plated brass cover; and capacity of at least 5 gpm; and inlet pressure of at least 5 psig at a temperature of at least 140 deg F. Include 5/8-inch- ID inlet and 7/8-inch-ID outlet hose connections.
3. Hoses: Rubber and suitable for temperature of at least 140 deg F.

    a. Inlet Hose: 5/8-inch ID and 48 inches long.
    b. Outlet Hose: 7/8-inch ID and 48 inches long.

2.8 WATER CLOSETS

A. Water Closets, (WC-1):

1. Basis-of-Design Product: Subject to compliance with requirements, provide the product indicated on Drawings American Standard Madera Model No. 3043.102 or a comparable product by one of the following:

    a. American Standard Companies, Inc.
    b. Crane Plumbing, L.L.C./Fiat Products.
    c. Eljer.
    d. Kohler Co.

2. Description: Accessible, floor-mounting, bottom-outlet, vitreous-china fixture designed for flushometer valve operation.

    a. Style: Flushometer valve.

        1) Bowl Type: Elongated with siphon-jet design.
        2) Design Consumption: 1.6 gal./flush.
        3) Color: White.
        4) Rim Height: 17-inches.

    b. Flushometer: Type 1.
    c. Toilet Seat: Type 1.

2.9 LAVATORIES

A. Lavatories, (L-1):

1. Basis-of-Design Product: Subject to compliance with requirements, provide the product indicated on Drawings American Standard Lucerne Model 0356.421 or a comparable product by one of the following:

    a. American Standard Companies, Inc.
    b. Crane Plumbing, L.L.C./Fiat Products.
    c. Eljer.
    d. Kohler Co.

2. Description: Accessible, wall-mounting, vitreous-china fixture.

    a. Type: Ledge back.
    b. Size: 20 by 18 inches rectangular.
    c. Faucet Hole Punching: One hole.
    d. Faucet Hole Location: Top.
    e. Pedestal: Not required.
    f. Color: White.
    g. Rim Height: 34-inches.
    h. Faucet: Lavatory Type 1.
    i. Supplies: NPS 3/8 chrome-plated copper with stops.
    j. Drain: Grid.
    k. Drain Piping: NPS 1-1/4 by NPS 1-1/2 chrome-plated, cast-brass P-trap; NPS 1-1/2, 0.045-inch- thick tubular brass waste to wall; and wall escutcheon.
    l. Protective Shielding Guards: Required.
    m. Fixture Support: Lavatory.

2.10 SINKS

A. Sink (S-1):

1. Basis-of-Design Product: Subject to compliance with requirements, provide the product indicated on Drawings Elkay Lusterone Sink Model No. LRAD-1720 or a comparable product by one of the following:

    a. Elkay Manufacturing Co.
    b. Just Manufacturing Company.

2. Description: Accessible, one-compartment, counter-mounting, stainless steel commercial sink.

    a. Overall Dimensions: 20 by 17 inches x 5-1/2 inches deep.
    b. Metal Thickness: 18 gauge.
    c. First Compartment: With 3-1/2 inch crumb cup.
    d. Sink Faucet: Type 1.
    e. Supplies: NPS 3/8 chrome plated copper with stops.

f. Drain Piping: NPS 1-1/2 chrome-plated cast-brass offset and trap, 0.0450 inch thick tubular brass waste to wall, and wall escutcheons.
g. Disposer: Not required.
h. Protective Shielding Guards: Required, by others.

B. Sink (S-2):

1. Basis-of-Design Product: Subject to compliance with requirements, provide the product indicated on Drawings Elkay Lusterone Sink Model No. LR-1720 or a comparable product by one of the following:

a. Elkay Manufacturing Co.
b. Just Manufacturing Company.

2. Description: One-compartment, counter-mounting, stainless steel commercial sink.

a. Overall Dimensions: 20 by 17 inches x 7-1/2 inches deep.
b. Metal Thickness: 18 gauge.
c. First Compartment: With 3-1/2 inch crumb cup.
d. Sink Faucet: Type 1.
e. Supplies: NPS 3/8 chrome plated copper with stops.
f. Drain Piping: NPS 1-1/2 chrome-plated cast-brass trap, 0.0450 inch thick tubular brass waste to wall, and wall escutcheons.
g. Disposer: Not required.
h. Protective Shielding Guards: Not required.

C. Sink (S-3):

1. Basis-of-Design Product: Subject to compliance with requirements, provide Elkay Lusterone Sink Model No. LR-3319 or a comparable product by one of the following:

a. Elkay Manufacturing Co.
b. Just Manufacturing Company.

2. Description: Two-compartment, counter-mounting, stainless steel commercial sink.

a. Overall Dimensions: 33 by 19-1/2 inches x 7-1/2 inches deep.
b. Metal Thickness: 18 gauge.
c. First Compartment: With 3-1/2 inch crumb cup.
d. First Compartment Location: Left.
e. Second Compartment: Located on opposite side of first compartment, with 3-1/2-inch crumb cup.
f. Sink Faucet: Type 1.
g. Supplies: NPS 3/8 chrome plated copper with stops.
h. Drain Piping: NPS 1-1/2 chrome-plated cast-brass offset and trap, 0.0450 inch thick tubular brass waste to wall; continuous waste; and wall escutcheons.
i. Disposer: Not required.
j. Protective Shielding Guards: Not required.

D. Sink (S-4):

1. Basis-of-Design Product: Subject to compliance with requirements, provide the product indicated on Drawings Elkay Lusterone Sink Model No. LRADQ-3319 or a comparable product by one of the following:

    a. Elkay Manufacturing Co.
    b. Just Manufacturing Company.

2. Description: Accessible, two-compartment, counter-mounting, stainless steel commercial sink.

    a. Overall Dimensions: 33 by 19-1/2 inches x 5-1/2 inches deep.
    b. Metal Thickness: 18 gauge.
    c. First Compartment: With 3-1/2 inch crumb cup.
    d. First Compartment Location: Left
    e. Second Compartment: Located on opposite side of first compartment, with 3-1/2 inch crumb cup.
    f. Sink Faucet: Type 1.
    g. Supplies: NPS 3/8 chrome plated copper with stops.
    h. Drain Piping: NPS 1-1/2 chrome-plated cast-brass offset and trap, 0.0450 inch thick tubular brass waste to wall, continuous waste, and wall escutcheons.
    i. Disposer: Not required.
    j. Protective Shielding Guards: Required, by others.

2.11 SHOWERS

A. Individual Shower (SH-1):

1. Basis-of-Design Product: Subject to compliance with requirements, provide Bradley Model WS-IWCA-ADA Individual Coverall Wall Shower or a comparable product by one of the following:

    a. Acorn Engineering Company.
    b. Bradley Corporation.

2. Description: Wall-mounting fixture with stainless-steel surface enclosure with one individual shower.

    a. Control: Thermostatic valve with individual hot and cold water mixing valve operation.
    b. Flow Control: 2.5 gpm for each shower head.
    c. Liquid Soap Dispenser: Not required.
    d. Mounting: Wall bracket.
    e. Supplies: Existing.

B. Group Shower (SH-2):

1. Basis-of-Design Product: Subject to compliance with requirements, provide Bradley Model COL-4C-HN Barrier-Free Column Shower or a comparable product by one of the following:

   a. Acorn Engineering Company.
   b. Bradley Corporation.

2. Description: Stainless-steel column fixture with four individual showers.

   a. Height to Shower Heads: 72 inches.
   b. Control: Thermostatic valve with individual hot and cold water mixing valve operation.
   c. Flow Control: 2.5 gpm for each shower head.
   d. Liquid Soap Dispenser: Not required.
   e. Mounting: Floor flange.
   f. Supplies: NPS 1 copper tubing with ball, gate, or globe valves from top.
   g. Shroud: Stainless steel of size to cover supplies and vent piping.
   h. Drain Fitting: NPS 3 outlet with NPS 2 vent, integral with base of column.
   i. Vent Piping: NPS 2 to ceiling.

PART 3 - EXECUTION

3.1 EXAMINATION

A. Examine roughing-in of water supply and sanitary drainage and vent piping systems to verify actual locations of piping connections before plumbing fixture installation.

B. Examine cabinets, counters, floors, and walls for suitable conditions where fixtures will be installed.

C. Proceed with installation only after unsatisfactory conditions have been corrected.

3.2 INSTALLATION

A. Assemble plumbing fixtures, trim, fittings, and other components according to manufacturers' written instructions.

B. Install off-floor supports, affixed to building substrate, for wall-mounting fixtures.

1. Use carrier supports without waste fitting for fixtures with tubular waste piping.
2. Use chair-type carrier supports with rectangular steel uprights for accessible fixtures.

C. Install floor-mounting fixtures on closet flanges or other attachments to piping or building substrate.

D. Install wall-mounting fixtures with tubular waste piping attached to supports.

E. Install counter-mounting fixtures in and attached to casework.

F. Install fixtures level and plumb according to roughing-in drawings.

G. Install water-supply piping with stop on each supply to each fixture to be connected to water distribution piping. Attach supplies to supports or substrate within pipe spaces behind fixtures. Install stops in locations where they can be easily reached for operation.

1. Exception: Use ball or globe valves if supply stops are not specified with fixture. Valves are specified in Division 15 Section "Valves."

H. Install trap and tubular waste piping on drain outlet of each fixture to be directly connected to sanitary drainage system.

I. Install flushometer valves for accessible water closets with handle mounted on wide side of compartment. Install other actuators in locations that are easy for people with disabilities to reach.

J. Install toilet seats on water closets.

K. Install faucet-spout fittings with specified flow rates and patterns in faucet spouts if faucets are not available with required rates and patterns. Include adapters if required.

L. Install water-supply flow-control fittings with specified flow rates in fixture supplies at stop valves.

M. Install faucet flow-control fittings with specified flow rates and patterns in faucet spouts if faucets are not available with required rates and patterns. Include adapters if required.

N. Install shower flow-control fittings with specified maximum flow rates in shower arms.

O. Install traps on fixture outlets.

1. Exception: Omit trap on fixtures with integral traps.
2. Exception: Omit trap on indirect wastes, unless otherwise indicated.

P. Install dishwasher air-gap fitting at each sink indicated to have air-gap fitting. Install in sink deck. Connect inlet hose to dishwasher and outlet hose to disposer.

Q. Install escutcheons at piping wall or ceiling penetrations in exposed, finished locations and within cabinets and millwork. Use deep-pattern escutcheons if required to conceal protruding fittings. Escutcheons are specified in Division 15 Section "Basic Mechanical Materials and Methods."

R. Seal joints between fixtures and walls, floors, and countertops using sanitary-type, one-part, mildew-resistant silicone sealant. Match sealant color to fixture color. Sealants are specified in Division 7 Section "Joint Sealants."

3.3 CONNECTIONS

A. Piping installation requirements are specified in other Division 15 Sections. Drawings indicate general arrangement of piping, fittings, and specialties.

B. Connect fixtures with water supplies, stops, and risers, and with traps, soil, waste, and vent piping. Use size fittings required to match fixtures.

C. Ground equipment according to Division 16 Section "Grounding and Bonding."

D. Connect wiring according to Division 16 Section "Conductors and Cables."

3.4 FIELD QUALITY CONTROL

A. Verify that installed plumbing fixtures are categories and types specified for locations where installed.

B. Check that plumbing fixtures are complete with trim, faucets, fittings, and other specified components.

C. Inspect installed plumbing fixtures for damage. Replace damaged fixtures and components.

D. Test installed fixtures after water systems are pressurized for proper operation. Replace malfunctioning fixtures and components, then retest. Repeat procedure until units operate properly.

3.5 ADJUSTING

A. Operate and adjust faucets and controls. Replace damaged and malfunctioning fixtures, fittings, and controls.

B. Adjust water pressure at faucets and flushometer valves to produce proper flow and stream.

C. Replace washers and seals of leaking and dripping faucets and stops.

3.6 CLEANING

A. Clean fixtures, faucets, and other fittings with manufacturers' recommended cleaning methods and materials. Do the following:

1. Remove faucet spouts and strainers, remove sediment and debris, and reinstall strainers and spouts.
2. Remove sediment and debris from drains.

B. After completing installation of exposed, factory-finished fixtures, faucets, and fittings, inspect exposed finishes and repair damaged finishes.

3.7 PROTECTION

A. Provide protective covering for installed fixtures and fittings.

B. Do not allow use of plumbing fixtures for temporary facilities unless approved in writing by Owner.

END OF SECTION 15410

SECTION 15415
DRINKING FOUNTAINS AND WATER COOLERS

PART 1 - GENERAL

1.1 RELATED DOCUMENTS

A. Drawings and general provisions of the Contract, including General and Supplementary Conditions and Division 1 Specification Sections, apply to this Section.

1.2 SUMMARY

A. This Section includes the following drinking fountains and related components:

1. Drinking fountains.
2. Fixture supports.

1.3 DEFINITIONS

A. Accessible Drinking Fountain: Fixture that can be approached and used by people with disabilities.

B. Cast Polymer: Dense, cast-filled-polymer plastic.

C. Drinking Fountain: Fixture with nozzle for delivering stream of water for drinking.

D. Fitting: Device that controls flow of water into or out of fixture.

E. Fixture: Drinking fountain or water cooler unless one is specifically indicated.

F. Remote Water Cooler: Electrically powered equipment for generating cooled drinking water.

G. Water Cooler: Electrically powered fixture for generating and delivering cooled drinking water.

1.4 SUBMITTALS

A. Product Data: For each fixture indicated. Include rated capacities, furnished specialties, and accessories.

B. Shop Drawings: Diagram power, signal, and control wiring.

C. Field quality-control test reports.

D. Operation and Maintenance Data: For fixtures to include in emergency, operation, and maintenance manuals.

1.5 QUALITY ASSURANCE

A. Electrical Components, Devices, and Accessories: Listed and labeled as defined in NFPA 70, Article 100, by a testing agency acceptable to authorities having jurisdiction, and marked for intended use.

B. Regulatory Requirements: Comply with requirements in ICC A117.1, "Accessible and Usable Buildings and Facilities"; Public Law 90-480, "Architectural Barriers Act"; and Public Law 101-336, "Americans with Disabilities Act"; for fixtures for people with disabilities.

C. NSF Standard: Comply with NSF 61, "Drinking Water System Components--Health Effects," for fixture materials that will be in contact with potable water.

D. ARI Standard: Comply with ARI's "Directory of Certified Drinking Water Coolers" for style classifications.

E. ARI Standard: Comply with ARI 1010, "Self-Contained, Mechanically Refrigerated Drinking-Water Coolers," for water coolers and with ARI's "Directory of Certified Drinking Water Coolers" for type and style classifications.

F. ASHRAE Standard: Comply with ASHRAE 34, "Designation and Safety Classification of Refrigerants," for water coolers. Provide HFC 134a (tetrafluoroethane) refrigerant, unless otherwise indicated.

PART 2 - PRODUCTS

2.1 DRINKING FOUNTAINS

A. Drinking Fountains, (DF-1):

1. Basis-of-Design Product: Subject to compliance with requirements, provide Halsey Taylor Model 8880 with 10245 Fountain and Cuspidor or a comparable product by one of the following:

    a. Halsey Taylor.
    b. Haws Corporation.
    c. Sunroc Corp.

2. Description: Stainless-steel, recessed drinking fountain with recessed cuspidor.

    a. Receptor Shape: Concave with flush wall flange.
    b. Bubbler: One, with adjustable stream regulator, located on deck.
    c. Control: Push button.
    d. Supply: NPS 3/8 with ball, gate, or globe valve.

e. Drain: Grid with NPS 1-1/4 minimum horizontal waste and trap complying with ASME A112.18.2.
f. Support: Mounting frames or brackets for attaching to substrate (fountain and cuspidor).
g. Fountain/Cuspidor: Shut-off valve and check valve installed in interconnecting supply piping.

2.2 FIXTURE SUPPORTS

A. Manufacturers: Same as manufacturer of drinking fountain/cuspidor being used.

PART 3 - EXECUTION

3.1 EXAMINATION

A. Examine roughing-in for water and waste piping systems to verify actual locations of piping connections before fixture installation. Verify that sizes and locations of piping and types of supports match those indicated.

B. Examine walls and floors for suitable conditions where fixtures are to be installed.

C. Proceed with installation only after unsatisfactory conditions have been corrected.

3.2 APPLICATIONS

A. Use mounting frames for recessed drinking fountains, unless otherwise indicated.

B. Use chrome-plated brass or copper tube, fittings, and valves in locations exposed to view. Plain copper tube, fittings, and valves may be used in concealed locations.

3.3 INSTALLATION

A. Install mounting frames affixed to building construction and attach recessed fountain/cuspidor to mounting frames, unless otherwise indicated.

B. Install fixtures level and plumb. For fixtures indicated for children, install at height required by authorities having jurisdiction.

C. Install water-supply piping with shutoff valve on supply to each fixture to be connected to water distribution piping. Use ball valve. Install valves in locations where they can be easily reached for operation. Valves are specified in Division 15 Section "Valves."

D. Install trap and waste piping on drain outlet of each fixture to be connected to sanitary drainage system.

E. Install pipe escutcheons at wall penetrations in exposed, finished locations. Use deep-pattern escutcheons where required to conceal protruding pipe fittings. Escutcheons are specified in Division 15 Section "Basic Mechanical Materials and Methods."

F. Seal joints between fixtures and walls using sanitary-type, one-part, mildew-resistant, silicone sealant. Match sealant color to fixture color. Sealants are specified in Division 7 Section "Joint Sealants."

3.4 CONNECTIONS

A. Piping installation requirements are specified in other Division 15 Sections. Drawings indicate general arrangement of piping, fittings, and specialties.

B. Connect fixtures with water supplies, stops, and risers, and with traps, soil, waste, and vent piping. Use size fittings required to match fixtures.

3.5 ADJUSTING

A. Adjust fixture flow regulators for proper flow and stream height.

3.6 CLEANING

A. After completing fixture installation, inspect unit. Remove paint splatters and other spots, dirt, and debris. Repair damaged finish to match original finish.

B. Clean fixtures, on completion of installation, according to manufacturer's written instructions.

END OF SECTION 15415

SECTION 15513
CONDENSING BOILERS

PART 1 - GENERAL

1.1 RELATED DOCUMENTS

A. Drawings and general provisions of the Contract, including General and Supplementary Conditions and Division 1 Specification Sections, apply to this Section.

1.2 SUMMARY

A. This Section includes packaged, factory-fabricated and -assembled, gas-fired, pulse-combustion condensing boilers, trim, and accessories for generating hot water.

1.3 SUBMITTALS

A. Product Data: Include performance data, operating characteristics, furnished specialties, and accessories.

B. Operation and Maintenance Data: For boilers to include in emergency, operation, and maintenance manuals.

C. Warranty: Special warranty specified in this Section.

1.4 QUALITY ASSURANCE

A. Electrical Components, Devices, and Accessories: Listed and labeled as defined in NFPA 70, Article 100, by a testing agency acceptable to authorities having jurisdiction, and marked for intended use.

B. ASME Compliance: Fabricate and label boilers to comply with ASME Boiler and Pressure Vessel Code.

C. ASHRAE/IESNA 90.1 Compliance: Boilers shall have minimum efficiency according to "Gas and Oil Fired Boilers - Minimum Efficiency Requirements."

D. UL Compliance: Test boilers for compliance with UL 795, "Commercial-Industrial Gas Heating Equipment." Boilers shall be listed and labeled by a testing agency acceptable to authorities having jurisdiction.

1.5 COORDINATION

A. Coordinate size and location of concrete bases. Cast anchor-bolt inserts into bases. Concrete, reinforcement, and formwork requirements are specified in Division 3.

1.6 WARRANTY

A. Special Warranty: Manufacturer's standard form in which manufacturer agrees to repair or replace components of boilers that fail in materials or workmanship within specified warranty period.

1. Warranty Period for Pulse-Combustion Boilers:

a. Heat Exchanger Damaged by Thermal Shock: 10 years from date of Substantial Completion.
b. Heat-Exchanger Corrosion: Nonprorated for five years from date of Substantial Completion.

PART 2 - PRODUCTS

2.1 MANUFACTURERS

A. Manufacturers: Subject to compliance with requirements, provide products by one of the following:

1. Aerco International, Inc.
2. Cleaver Brooks.
3. Fulton Boiler Works, Inc.

2.2 MANUFACTURED UNITS

A. Description: Factory-fabricated, -assembled, and -tested, pulse-combustion condensing boiler with heat exchanger sealed pressure tight, built on a steel base; including insulated jacket; flue-gas vent; combustion-air intake connections; water supply, return, and condensate drain connections; and controls.

B. Heat Exchanger: Carbon-steel primary and secondary combustion chamber.

C. Pressure Vessel: Carbon steel with welded heads and tube connections.

D. Exhaust Decoupler: Fiberglass composite material in a corrosion-resistant steel box.

E. Burner: Natural gas, self-aspirating and self-venting after initial start.

F. Blower: Centrifugal fan to operate only during start of each burner sequence.

1. Motors: Comply with requirements specified in Division 15 Section "Motors."

a. Motor Sizes: Minimum size as indicated. If not indicated, large enough so driven load will not require motor to operate in service factor range above 1.0.

G. IRI Gas Train: Combination gas valve with manual shutoff and pressure regulator. Include 100 percent safety shutoff with electronic flame supervision with a keyboard display module.

H. Ignition: Spark ignition with 100 percent main-valve shutoff with electronic flame supervision.

I. Casing:

1. Jacket: Sheet metal, with snap-in or interlocking closures.
2. Control Compartment Enclosure: NEMA 250, Type 1A.
3. Finish: Powder-coated protective finish.
4. Insulation: Minimum 2-inch- thick, mineral-fiber insulation surrounding the heat exchanger.
5. Combustion-Air Connection: Inlet duct collar and sheet metal closure over burner compartment.
6. Mounting base to secure boiler to concrete base.

J. Mufflers: Carbon-steel intake muffler and stainless steel exhaust.

K. Condensate Trap: Cast-iron body with stainless-steel internal parts.

2.3 TRIM

A. Include devices sized to comply with ANSI B31.1, "Power Piping."

B. Aquastat Controllers: Operating and high limit.

C. Safety Relief Valve: ASME rated.

D. Pressure and Temperature Gage: Minimum 3-1/2-inch- diameter, combination water-pressure and -temperature gage. Gages shall have operating-pressure and -temperature ranges so normal operating range is about 50 percent of full range.

E. Drain Valve: Minimum NPS 3/4 hose-end gate valve.

2.4 CONTROLS

A. Refer to Division 15 Section "HVAC Instrumentation and Controls."

2.5 ELECTRICAL POWER

A. Single-Point Field Power Connection: Factory-installed and -wired switches, motor controllers, transformers, and other electrical devices necessary shall provide a single-point field power connection to boiler.

1. House in NEMA 250, Type 1 enclosure.
2. Wiring shall be numbered and color-coded to match wiring diagram.

3. Install factory wiring outside of an enclosure in a metal raceway.
4. Field power interface shall be to wire lugs.
5. Provide branch power circuit to each motor and to controls.
6. Provide each motor with overcurrent protection.

2.6 VENTING KITS

A. Kit: Complete system, ASTM A 959, Type 29-4C stainless steel, pipe, vent terminal, thimble, indoor plate, vent adapter, condensate trap and dilution tank, and sealant.

B. Combustion-Air Intake: Complete system, PVC schedule 40 pipe, vent terminal with screen, inlet air coupling, and sealant.

2.7 SOURCE QUALITY CONTROL

A. Burner and Hydrostatic Test: Factory adjust burner to eliminate excess oxygen, carbon dioxide, oxides of nitrogen emissions, and carbon monoxide in flue gas and to achieve combustion efficiency; perform hydrostatic test.

B. Test and inspect factory-assembled boilers, before shipping, according to ASME Boiler and Pressure Vessel Code.

C. Allow Owner access to source quality control testing of boilers. Notify Architect 14 days in advance of testing.

PART 3 - EXECUTION

3.1 EXAMINATION

A. Before boiler installation, examine roughing-in for concrete equipment bases, anchor-bolt sizes and locations, and piping and electrical connections to verify actual locations, sizes, and other conditions affecting boiler performance, maintenance, and operations.

1. Final boiler locations indicated on Drawings are approximate. Determine exact locations before roughing-in for piping and electrical connections.

B. Examine mechanical spaces for suitable conditions where boilers will be installed.

C. Proceed with installation only after unsatisfactory conditions have been corrected.

3.2 BOILER INSTALLATION

A. Install boilers level on concrete base. Concrete base is specified in Division 15 Section "Basic Mechanical Materials and Methods," and concrete materials and installation requirements are specified in Division 3.

B. Vibration Isolation: Restrained spring isolators with a minimum static deflection of 2-inches. Vibration isolation devices and installation requirements are specified in Division 15 Section "Mechanical Vibration and Seismic Controls."

C. Install gas-fired boilers according to NFPA 54.

D. Assemble and install boiler trim.

E. Install electrical devices furnished with boiler but not specified to be factory mounted.

F. Install control wiring to field-mounted electrical devices.

3.3 CONNECTIONS

A. Piping installation requirements are specified in other Division 15 Sections. Drawings indicate general arrangement of piping, fittings, and specialties.

B. Install piping adjacent to boiler to allow service and maintenance.

C. Install piping from equipment drain connection to nearest floor drain. Piping shall be at least full size of connection. Provide an isolation valve if required.

D. Connect piping to boilers, except safety relief valve connections, with flexible connectors of materials suitable for service. Flexible connectors and their installation are specified in Division 15 Section "Basic Mechanical Materials and Methods."

E. Connect gas piping to boiler gas-train inlet with union. Piping shall be at least full size of gas train connection. Provide a reducer if required.

F. Connect hot-water piping to supply- and return-boiler tappings with shutoff valve and union or flange at each connection.

G. Install piping from safety relief valves to nearest floor drain.

H. Boiler Venting:

1. Install flue venting kit and combustion-air intake.
2. Connect full size to boiler connections.

I. Ground equipment according to Division 16 Section "Grounding and Bonding."

J. Connect wiring according to Division 16 Section "Conductors and Cables."

3.4 FIELD QUALITY CONTROL

A. Perform tests and inspections and prepare test reports.

1. Manufacturer's Field Service: Engage a factory-authorized service representative to inspect components, assemblies, and equipment installations, including connections, and to assist in testing.

B. Tests and Inspections:

1. Perform installation and startup checks according to manufacturer's written instructions.
2. Leak Test: Hydrostatic test. Repair leaks and retest until no leaks exist.
3. Operational Test: Start units to confirm proper motor rotation and unit operation. Adjust air-fuel ratio and combustion.
4. Test and adjust controls and safeties. Replace damaged and malfunctioning controls and equipment.

    a. Check and adjust initial operating set points and high- and low-limit safety set points of fuel supply, water level.
    b. Set field-adjustable switches and circuit breaker trip ranges as indicated.

C. Remove and replace malfunctioning units and retest as specified above.

D. Occupancy Adjustments: When requested within 12 months of date of Substantial Completion, provide on-site assistance in adjusting system to suit actual occupied conditions. Provide up to two visits to Project during other than normal occupancy hours for this purpose.

E. Performance Tests:

1. Engage a factory-authorized service representative to inspect component assemblies and equipment installations, including connections, and to conduct performance testing.
2. Boilers shall comply with performance requirements indicated, as determined by field performance tests. Adjust, modify, or replace equipment to comply.
3. Perform field performance tests to determine capacity and efficiency of boilers.

    a. Test for full capacity.

4. Repeat tests until results comply with requirements indicated.
5. Provide analysis equipment required to determine performance.
6. Provide temporary equipment and system modifications necessary to dissipate the heat produced during tests if building systems are not adequate.
7. Notify Architect in advance of test dates.
8. Document test results in a report and submit to Architect.

3.5 DEMONSTRATION

A. Engage a factory-authorized service representative to train Owner's maintenance personnel to adjust, operate, and maintain boilers. Refer to Division 1 Section "Demonstration and Training."

END OF SECTION 15513

SECTION 15550
BREECHINGS, CHIMNEYS, AND STACKS

PART 1 - GENERAL

1.1 RELATED DOCUMENTS

A. Drawings and general provisions of the Contract, including General and Supplementary Conditions and Division 1 Specification Sections, apply to this Section.

1.2 SUMMARY

A. This Section includes the following:

1. Listed double-wall vents.

1.3 SUBMITTALS

A. Product Data: For the following:

1. Special gas vents.
2. Guy wires and connectors.

1.4 QUALITY ASSURANCE

A. Source Limitations: Obtain listed system components through one source from a single manufacturer.

1.5 COORDINATION

A. Coordinate installation of roof curbs, equipment supports, and roof penetrations. These items are specified in Division 7 Section "Roof Accessories."

PART 2 - PRODUCTS

2.1 LISTED SPECIAL GAS VENTS

A. Manufacturers: Subject to compliance with requirements, provide products by one of the following:

1. Heat-Fab, Inc.
2. Metal-Fab, Inc.

B. Description: Double-wall metal vents tested according to UL 1738 and rated for 480 deg F continuously, with positive or negative flue pressure complying with NFPA 211.

C. Construction: Inner shell and outer jacket separated by at least a 1/2-inch airspace.

D. Inner Shell: ASTM A 959, Type 29-4C stainless steel.

E. Outer Jacket: Stainless steel.

F. Accessories: Tees, elbows, increasers, draft-hood connectors, terminations, adjustable roof flashings, storm collars, support assemblies, thimbles, firestop spacers, and fasteners; fabricated from similar materials and designs as vent-pipe straight sections; all listed for same assembly.

1. Termination: Round chimney top designed to exclude minimum 98 percent of rainfall.

2.2 GUYING AND BRACING MATERIALS

A. Cable: Three galvanized, stranded wires of the following thickness:

1. Minimum Size: 1/4 inch in diameter.
2. For ID Sizes 4 to 15 Inches: 5/16 inch.
3. For ID Sizes 18 to 24 Inches: 3/8 inch.
4. For ID Sizes 27 to 30 Inches: 7/16 inch.
5. For ID Sizes 33 to 36 Inches: 1/2 inch.
6. For ID Sizes 39 to 48 Inches: 9/16 inch.
7. For ID Sizes 51 to 60 Inches: 5/8 inch.

PART 3 - EXECUTION

3.1 EXAMINATION

A. Examine areas and conditions for compliance with requirements for installation tolerances and other conditions affecting performance of work.

1. Proceed with installation only after unsatisfactory conditions have been corrected.

3.2 APPLICATION

A. Listed Type B and BW Vents: Vents for certified gas appliances.

B. Listed Special Gas Vent: Condensing gas appliances.

3.3 INSTALLATION OF LISTED VENTS AND CHIMNEYS

A. Locate to comply with minimum clearances from combustibles and minimum termination heights according to product listing or NFPA 211, whichever is most stringent.

B. Support vents at intervals recommended by manufacturer to support weight of vents and all accessories, without exceeding appliance loading.

C. Lap joints in direction of flow.

3.4 CLEANING

A. After completing system installation, including outlet fittings and devices, inspect exposed finish. Remove burrs, dirt, and construction debris and repair damaged finishes.

B. Clean breechings internally, during and after installation, to remove dust and debris. Clean external surfaces to remove welding slag and mill film. Grind welds smooth and apply touchup finish to match factory or shop finish.

C. Provide temporary closures at ends of breechings, chimneys, and stacks that are not completed or connected to equipment.

END OF SECTION 15550

SECTION 15671
CONDENSING UNITS

PART 1 - GENERAL

1.1 RELATED DOCUMENTS

A. Drawings and general provisions of the Contract, including General and Supplementary Conditions and Division 1 Specification Sections, apply to this Section.

1.2 SUMMARY

A. This Section includes air-cooled condensing units.

1.3 SUBMITTALS

A. Product Data: For each condensing unit, include rated capacities, operating characteristics, furnished specialties, and accessories. Include equipment dimensions, weights and structural loads, required clearances, method of field assembly, components, and location and size of each field connection.

B. Field quality-control test reports.

C. Operation and Maintenance Data: For condensing units to include in emergency, operation, and maintenance manuals.

D. Warranty: Special warranty specified in this Section.

1.4 QUALITY ASSURANCE

A. Product Options: Drawings indicate size, profiles, and dimensional requirements of condensing units and are based on the specific system indicated. Refer to Division 1 Section "Product Requirements."

B. Electrical Components, Devices, and Accessories: Listed and labeled as defined in NFPA 70, Article 100, by a testing agency acceptable to authorities having jurisdiction, and marked for intended use.

C. Fabricate and label refrigeration system according to ASHRAE 15, "Safety Code for Mechanical Refrigeration."

1. Units shall be designed to operate with HCFC-free refrigerants.

D. ASME Compliance: Fabricate and label water-cooled condensing units to comply with ASME Boiler and Pressure Vessel Code: Section VIII, Division 1.

1.5 COORDINATION

A. Coordinate installation of roof curbs, equipment supports, and roof penetrations. These items are specified in Division 7 Section "Roof Accessories."

B. Coordinate location of piping and electrical rough-ins.

1.6 WARRANTY

A. Special Warranty: Manufacturer's standard form in which manufacturer agrees to repair or replace components of condensing units that fail in materials or workmanship within specified warranty period.

1. Failures include, but are not limited to, the following:

a. Compressor failure.
b. Condenser coil leak.

2. Warranty Period: 10 years from date of Substantial Completion.

PART 2 - PRODUCTS

2.1 MANUFACTURERS

A. In other Part 2 articles where titles below introduce lists, the following requirements apply to product selection:

1. Manufacturers: Subject to compliance with requirements, provide products by one of the manufacturers specified.

2.2 CONDENSING UNITS, AIR COOLED, 1 TO 15 TONS

A. Manufacturers:

1. Carrier Corporation; Carrier Air Conditioning Div.
2. Trane Co. (The); Worldwide Applied Systems Group.
3. York.

B. Description: Factory assembled and tested, consisting of compressor, condenser coil, fan, motors, refrigerant reservoir, and operating controls.

C. Compressor: Scroll, hermetically sealed, with rubber vibration isolators.

1. Motor: Two speed, and includes thermal- and current-sensitive overload devices, start capacitor, relay, and contactor.
2. Refrigerant Charge: R-22.

D. Condenser Coil: Seamless copper-tube, aluminum-fin coil; circuited for integral liquid subcooler, with removable drain pan and brass service valves with service ports.

E. Condenser Fan: Direct-drive, aluminum propeller fan; with permanently lubricated, totally enclosed fan motor with thermal-overload protection and ball bearings.

F. Accessories:

1. Crankcase heater.
2. Low Ambient Controller: Cycles condenser fan to permit operation down to 0 deg F with time-delay relay to bypass low-pressure switch.
3. Low-Pressure Switch: Automatic-reset switch cycles compressor off on low refrigerant pressure.
4. PE mounting base to provide a permanent foundation.
5. Precharged and insulated suction and liquid tubing.

G. Unit Casing: Galvanized steel, finished with baked enamel; with removable panels for access to controls, weep holes for water drainage, and mounting holes in base. Mount service valves, fittings, and gage ports on exterior of casing.

2.3 MOTORS

A. General requirements for motors are specified in Division 15 Section "Motors."

1. Motor Sizes: Minimum size as indicated. If not indicated, large enough so driven load will not require motor to operate in service factor range above 1.0.
2. Controllers, Electrical Devices, and Wiring: Electrical devices and connections are specified in Division 16 Sections.

2.4 SOURCE QUALITY CONTROL

A. Verification of Performance: Rate condensing units according to ARI 210/240.

1. Coefficient of Performance: Equal to or greater than prescribed by ASHRAE/IESNA 90.1, "Energy Efficient Design of New Buildings except Low-Rise Residential Buildings."
2. Energy-Efficiency Ratio: Equal to or greater than prescribed by ASHRAE/IESNA 90.1, "Energy Efficient Design of New Buildings except Low-Rise Residential Buildings."

B. Testing Requirements: Factory test sound-power-level ratings according to ARI 270.

PART 3 - EXECUTION

3.1 EXAMINATION

A. Examine substrates, areas, and conditions, with Installer present, for compliance with requirements for installation tolerances and other conditions affecting performance of condensing units.

B. Examine roughing-in for refrigerant piping systems to verify actual locations of piping connections before equipment installation.

C. Examine walls, floors, and roofs for suitable conditions where condensing units will be installed.

D. Proceed with installation only after unsatisfactory conditions have been corrected.

3.2 INSTALLATION

A. Install units level and plumb, firmly anchored in locations indicated; maintain manufacturer's recommended clearances.

B. Install roof-mounting units on equipment supports specified in Division 7.

C. Vibration Isolation: Mount condensing units on restrained spring isolators. Vibration isolation devices and installation requirements are specified in Division 15 Section "Mechanical Vibration and Seismic Controls."

D. Maintain manufacturer's recommended clearances for service and maintenance.

E. Loose Components: Install electrical components, devices, and accessories that are not factory mounted.

3.3 CONNECTIONS

A. Piping installation requirements are specified in other Division 15 Sections. Drawings indicate general arrangement of piping, fittings, and specialties.

B. Install piping adjacent to machine to allow service and maintenance.

C. Connect precharged refrigerant tubing to unit's quick-connect fittings. Install tubing so it does not interfere with access to unit. Install furnished accessories.

D. Connect refrigerant piping to air-cooled condensing units; maintain required access to unit. Install furnished field-mounted accessories. Refrigerant piping and specialties are specified in Division 15 Section "Refrigerant Piping."

E. Ground equipment according to Division 16 Section "Grounding and Bonding."

F. Connect wiring according to Division 16 Section "Conductors and Cables."

3.4 FIELD QUALITY CONTROL

A. Perform the following field tests and inspections and prepare test reports:

1. Perform electrical test and visual and mechanical inspection.
2. Leak Test: After installation, charge systems with refrigerant and oil and test for leaks. Repair leaks, replace lost refrigerant and oil, and retest until no leaks exist.
3. Operational Test: After electrical circuitry has been energized, start units to confirm proper operation, product capability, and compliance with requirements.
4. Test and adjust controls and safeties. Replace damaged and malfunctioning controls and equipment.
5. Verify proper airflow over coils.

B. Verify that vibration isolation and flexible connections properly dampen vibration transmission to structure.

C. Remove and replace malfunctioning condensing units and retest as specified above.

3.5 STARTUP SERVICE

A. Complete installation and startup checks according to manufacturer's written instructions and perform the following:

1. Inspect for physical damage to unit casing.
2. Verify that access doors move freely and are weathertight.
3. Clean units and inspect for construction debris.
4. Verify that all bolts and screws are tight.
5. Adjust vibration isolation and flexible connections.
6. Verify that controls are connected and operational.

B. Lubricate bearings on fans.

C. Verify that fan wheel is rotating in the correct direction and is not vibrating or binding.

D. Adjust fan belts to proper alignment and tension.

E. Start unit according to manufacturer's written instructions and complete manufacturer's startup checklist.

F. Measure and record airflow over coils.

G. Verify proper operation of condenser capacity control device.

H. Verify that vibration isolation and flexible connections properly dampen vibration transmission to structure.

I. After startup and performance test, lubricate bearings.

3.6 DEMONSTRATION

A. Engage a factory-authorized service representative to train Owner's maintenance personnel to adjust, operate, and maintain condensing units. Refer to Division 1 Section "Closeout Procedures."

END OF SECTION 15671

SECTION 15725
MODULAR AIR-HANDLING UNITS

PART 1 - GENERAL

1.1 RELATED DOCUMENTS

A. Drawings and general provisions of the Contract, including General and Supplementary Conditions and Division 1 Specification Sections, apply to this Section.

1.2 SUMMARY

A. This Section includes constant-volume, modular air-handling units with coils for indoor installations.

1.3 SUBMITTALS

A. Product Data: For each type of modular indoor air-handling unit indicated. Include the following:

1. Certified fan-performance curves with system operating conditions indicated.
2. Certified fan-sound power ratings.
3. Certified coil-performance ratings with system operating conditions indicated.
4. Motor ratings, electrical characteristics, and motor and fan accessories.
5. Material gages and finishes.
6. Filters with performance characteristics.
7. Dampers, including housings, linkages, and operators.

1.4 QUALITY ASSURANCE

A. Source Limitations: Obtain modular indoor air-handling units through one source from a single manufacturer.

B. Product Options: Drawings indicate size, profiles, and dimensional requirements of modular indoor air-handling units and are based on the specific system indicated. Refer to Division 1 Section "Product Requirements."

C. Electrical Components, Devices, and Accessories: Listed and labeled as defined in NFPA 70, Article 100, by a testing agency acceptable to authorities having jurisdiction, and marked for intended use.

D. NFPA Compliance: Modular indoor air-handling units and components shall be designed, fabricated, and installed in compliance with NFPA 90A, "Installation of Air Conditioning and Ventilating Systems."

E. ARI Certification: Modular indoor air-handling units and their components shall be factory tested according to ARI 430, "Central-Station Air-Handling Units," and shall be listed and labeled by ARI.

F. Comply with NFPA 70.

1.5 COORDINATION

A. Coordinate size and location of concrete bases. Cast anchor-bolt inserts into bases. Concrete, reinforcement, and formwork requirements are specified in Division 3.

B. Coordinate size and location of structural-steel support members.

1.6 EXTRA MATERIALS

A. Furnish extra materials described below that match products installed and that are packaged with protective covering for storage and identified with labels describing contents.

1. Filters: One set for each modular indoor air-handling unit.
2. Fan Belts: One set for each modular indoor air-handling unit fan.
3. Gaskets: One set for each access door.

PART 2 - PRODUCTS

2.1 MANUFACTURERS

A. Manufacturers: Subject to compliance with requirements, provide products by one of the following:

1. Carrier; Div. of United Technologies Corp.
2. McQuay International.
3. Trane Company (The); Worldwide Applied Systems Group.
4. York International Corporation.

2.2 MANUFACTURED UNITS

A. Modular indoor air-handling units shall be factory assembled and consist of fans, motor and drive assembly, coils, damper, plenums, filters, condensate pans, mixing dampers, control devices, and accessories.

2.3 CABINET

A. Materials: Formed and reinforced double-wall insulated panels, fabricated to allow removal for access to internal parts and components, with joints between sections sealed.

1. Outside Casing: Galvanized steel, 0.0635 inch thick.
2. Inside Casing: Galvanized steel, 0.0276 inch thick.
3. Floor Plate: Galvanized steel, 0.1382 inch thick.

B. Cabinet Insulation: Comply with NFPA 90A or NFPA 90B.

1. Materials: ASTM C 1071 with coated surface exposed to airstream to prevent erosion of glass fibers.
2. Thickness: 2 inches.
3. Thermal Conductivity (k-Value): 0.26 at 75 deg F mean temperature.
4. Fire-Hazard Classification: Maximum flame-spread index of 25 and smoke-developed index of 50, when tested according to ASTM C 411.
5. Liner Adhesive: Comply with NFPA 90A or NFPA 90B and ASTM C 916.
6. Mechanical Fasteners: Galvanized steel, suitable for adhesive attachment, mechanical attachment, or welding attachment to duct without damaging liner when applied as recommended by manufacturer and without causing leakage in cabinet.
7. Location and Application: Factory applied with adhesive and mechanical fasteners to the internal surface of section panels downstream from and including the cooling coil section.
8. Location and Application: Encased between outside and inside casing.

C. Access Panels and Doors: Same materials and finishes as cabinet, complete with hinges, latches, handles, and gaskets. Inspection and access panels and doors shall be sized and located to allow periodic maintenance and inspections. Provide access panels and doors in the following locations:

1. Fan Section: Doors.
2. Access Section: Doors.
3. Coil Section: Inspection panel.
4. Damper Section: Doors.
5. Filter Section: Doors to allow periodic removal and installation of filters.

D. Condensate Drain Pans: Formed sections of galvanized-steel sheet complying with requirements in ASHRAE 62. Fabricate pans with slopes in two planes to collect condensate from cooling coils (including coil piping connections and return bends) and humidifiers when units are operating at maximum catalogued face velocity across cooling coil.

1. Double-Wall Construction: Fill space between walls with foam insulation and seal moisture tight.
2. Drain Connections: Both ends of pan.
3. Pan-Top Surface Coating: Elastomeric compound.
4. Units with stacked coils shall have an intermediate drain pan or drain trough to collect condensate from top coil.

2.4 FAN SECTION

A. Fan-Section Construction: Belt-driven centrifugal fans consisting of housing, wheel, fan shaft, bearings, motor and disconnect switch, drive assembly, and support structure and equipped with formed-steel channel base for integral mounting of fan, motor, and casing panels. Mount fan with vibration isolation.

B. Centrifugal Fan Housings: Formed- and reinforced-steel panels to make curved scroll housings with shaped cutoff, spun-metal inlet bell, and access doors or panels to allow entry to internal parts and components.

1. Panel Bracing: Steel angle- or channel-iron member supports for mounting and supporting fan scroll, wheel, motor, and accessories.
2. Performance Class: AMCA 99-2408, Class II.
3. Horizontal Flanged Split Housing: Bolted construction.
4. Plug Fans: With steel cabinet. Fabricate without fan scroll and volute housing.

C. Fan Assemblies: Statically and dynamically balanced and designed for continuous operation at maximum rated fan speed and motor horsepower.

D. Shafts: Statically and dynamically balanced and designed for continuous operation at maximum rated fan speed and motor horsepower, with final alignment and belt adjustment made after installation.

1. Turned, ground, and polished hot-rolled steel with keyway. Ship with a protective coating of lubricating oil.
2. Designed to operate at no more than 70 percent of first critical speed at top of fan's speed range.

E. Prelubricated and Sealed Shaft Bearings: Self-aligning, pillow-block-type ball bearings.

1. Ball-Bearing Rating Life: ABMA 9, L_{10} of 120,000 hours.

F. Belt Drives: Factory mounted, with final alignment and belt adjustment made after installation and with 1.5 service factor based on fan motor.

1. Pulleys: Cast iron or cast steel with split, tapered bushing; dynamically balanced at factory.
2. Motor Pulleys: Adjustable pitch for use with 5-hp motors and smaller; fixed pitch for use with motors larger than 5 hp. Select pulley so pitch adjustment is at the middle of adjustment range at fan design conditions.
3. Belts: Oil resistant, nonsparking, and nonstatic; matched for multiple belt drives.
4. Belt Guards: Fabricate to OSHA/SMACNA requirements; 0.1046-inch- thick, 3/4-inch diamond-mesh wire screen welded to steel angle frame or equivalent; prime coated. Provide belt guards for motors mounted on outside of cabinet.
5. Motor Mount: Adjustable for belt tensioning.

G. Fan-Section Source Quality Control:

1. Sound Power Level Ratings: Comply with AMCA 301, "Methods for Calculating Fan Sound Ratings from Laboratory Test Data." Test fans according to AMCA 300,

"Reverberant Room Method for Sound Testing of Fans." Fans shall bear AMCA-certified sound ratings seal.

2. Factory test fan performance for flow rate, pressure, power, air density, rotation speed, and efficiency. Establish ratings according to AMCA 210, "Laboratory Methods of Testing Fans for Rating."

2.5 MOTORS

A. General: Comply with requirements in Division 15 Section "Motors."

B. Noise Rating: Quiet.

2.6 COILS

A. Coil Sections: Common or individual, insulated, galvanized-steel casings for heating and cooling coils. Design and construct to facilitate removal and replacement of coil for maintenance and to ensure full airflow through coils.

B. Water Coils: Continuous circuit coil fabricated according to ARI 410.

1. Face-and-Bypass Dampers: Extruded-aluminum blades with full-length drive rod.
2. Piping Connections: Threaded, on same end.
3. Tubes: Copper.
4. Fins: Aluminum with fin spacing 0.125 inch.
5. Fin and Tube Joint: Mechanical bond.
6. Headers: Cast iron with drain and air vent tappings.
7. Frames: Galvanized-steel channel frame, 0.052 inch.
8. Frames: Stainless steel, 0.0625 inch.
9. Ratings: Design tested and rated according to ASHRAE 33 and ARI 410.
    a. Working-Pressure Ratings: 200 psig, 325 deg F.
10. Source Quality Control: Test to 300 psig and to 200 psig underwater.

2.7 DAMPERS

A. General: Leakage rate, according to AMCA 500, "Laboratory Methods for Testing Dampers for Rating," shall not exceed 2 percent of air quantity at 2000-fpm face velocity through damper and 4-inch wg pressure differential.

B. Damper Operators: Electric specified in Division 15 Section "HVAC Instrumentation and Controls."

C. Low-Leakage, Outside-Air Dampers: Double-skin, airfoil-blade galvanized-steel dampers with compressible jamb seals and extruded-vinyl blade edge seals, in [opposed] [parallel]-blade arrangement with steel operating rods rotating in [stainless-steel sleeve] [sintered bronze or nylon] bearings mounted in a single galvanized-steel frame, and with operating rods connected with a common linkage. Leakage rate shall not exceed 5 cfm/sq. ft. at 1-inch wg and 9 cfm/sq. ft. at 4-inch wg.

D. Combination Filter and Mixing Box: Parallel-blade galvanized-steel dampers mechanically fastened to steel operating rod in reinforced, galvanized-steel cabinet. Connect operating rods with common linkage and interconnect linkages so dampers operate simultaneously. Cabinet support members shall hold 2-inch- thick, pleated, flat permanent or throwaway filters. Provide hinged access panels or doors to allow removal of filters from both sides of unit.

2.8 FILTER SECTION

A. Filters: Comply with NFPA 90A.

B. Filter Section: Provide filter holding frames arranged for flat or angular orientation, with access doors on both sides of unit. Filters shall be removable from one side.

C. Extended-Surface, Disposable Panel Filters: Factory-fabricated, dry, extended-surface filters with holding frames.

1. Media: Fibrous material formed into deep-V-shaped pleats and held by self-supporting wire grid.
2. Media and Media-Grid Frame: Nonflammable cardboard.

PART 3 - EXECUTION

3.1 EXAMINATION

A. Examine areas and conditions for compliance with requirements for installation tolerances and other conditions affecting performance.

B. Examine roughing-in of steam, hydronic, and condensate drainage piping systems and electrical services to verify actual locations of connections before installation.

C. Proceed with installation only after unsatisfactory conditions have been corrected.

3.2 INSTALLATION

A. Concrete Bases: Install floor mounting units on 4-inch- high concrete bases. See Division 15 Section "Basic Mechanical Materials and Methods" for concrete base materials and fabrication requirements.

B. Install modular indoor air-handling units with the following vibration-control devices. Vibration-control devices are specified in Division 15 Section "Mechanical Vibration."

1. Units with Internally Isolated Fans: Secure units to anchor bolts installed in concrete bases.
2. Floor-Mounted Units: Support on concrete bases using housed-spring isolators. Secure units to anchor bolts installed in concrete bases.

C. Arrange installation of units to provide access space around modular indoor air-handling units for service and maintenance.

3.3 CONNECTIONS

A. Piping installation requirements are specified in other Division 15 Sections. Drawings indicate general arrangement of piping, fittings, and specialties.

B. Install piping adjacent to machine to allow service and maintenance.

C. Connect piping to modular indoor air-handling units mounted on vibration isolators with flexible connectors.

D. Connect condensate drain pans using NPS 1-1/4, Type M copper tubing. Extend to nearest equipment or floor drain. Construct deep trap at connection to drain pan and install cleanouts at changes in direction.

E. Hot- and Chilled-Water Piping: Comply with applicable requirements in Division 15 Section "Hydronic Piping." Connect to supply and return coil tappings with shutoff or balancing valve and union or flange at each connection.

F. Duct installation and connection requirements are specified in other Division 15 Sections. Drawings indicate general arrangement of ducts and duct accessories. Make final duct connections with flexible connections.

G. Electrical: Comply with applicable requirements in Division 16 Sections for power wiring, switches, and motor controls.

H. Ground equipment according to Division 16 Section "Grounding and Bonding."

I. Tighten electrical connectors and terminals according to manufacturer's published torque-tightening values. If manufacturer's torque values are not indicated, use those specified in UL 486A and UL 486B.

3.4 FIELD QUALITY CONTROL

A. Manufacturer's Field Service: Engage a factory-authorized service representative to inspect field-assembled components and equipment installation, including piping and electrical connections. Report results in writing.

1. Leak Test: After installation, fill water and steam coils with water and test coils and connections for leaks. Repair leaks and retest until no leaks exist.
2. Fan Operational Test: After electrical circuitry has been energized, start units to confirm proper motor rotation and unit operation. Remove malfunctioning units, replace with new units, and retest.
3. Test and adjust controls and safeties. Replace damaged and malfunctioning controls and equipment.

3.5 STARTUP SERVICE

A. Engage a factory-authorized service representative to perform startup service.

B. Final Checks before Startup: Perform the following:

1. Verify that shipping, blocking, and bracing are removed.
2. Verify that unit is secure on mountings and supporting devices and that connections to piping, ducts, and electrical systems are complete. Verify that proper thermal-overload protection is installed in motors, starters, and disconnect switches.
3. Perform cleaning and adjusting specified in this Section.
4. Disconnect fan drive from motor, verify proper motor rotation direction, and verify free fan wheel rotation and smooth bearing operations. Reconnect fan drive system, align belts, and install belt guards.
5. Lubricate bearings, pulleys, belts, and other moving parts with factory-recommended lubricants.
6. Set face-and-bypass dampers to full face flow.
7. Set outside- and return-air mixing dampers to minimum outside-air setting.
8. Comb coil fins for parallel orientation.
9. Install clean filters.
10. Verify that manual and automatic volume control and fire and smoke dampers in connected duct systems are in fully open position.

C. Starting procedures for modular indoor air-handling units include the following:

1. Energize motor; verify proper operation of motor, drive system, and fan wheel. Adjust fan to indicated rpm. Replace fan and motor pulleys as required to achieve design conditions.
2. Measure and record motor electrical values for voltage and amperage.
3. Manually operate dampers from fully closed to fully open position and record fan performance.

D. Refer to Division 15 Section "Testing, Adjusting, and Balancing" for modular indoor air-handling system testing, adjusting, and balancing.

3.6 ADJUSTING

A. Adjust damper linkages for proper damper operation.

3.7 CLEANING

A. Clean modular indoor air-handling units internally, on completion of installation, according to manufacturer's written instructions. Clean fan interiors to remove foreign material and construction dirt and dust. Vacuum clean fan wheels, cabinets, and coils entering air face.

B. After completing system installation and testing, adjusting, and balancing modular indoor air-handling and air-distribution systems, clean filter housings and install new filters.

3.8 DEMONSTRATION

A. Engage a factory-authorized service representative to train Owner's maintenance personnel to adjust, operate, and maintain modular indoor air-handling units. Refer to Division 1 Section "Closeout Procedures."

END OF SECTION 15725

SECTION 15732
PACKAGED, OUTDOOR, CENTRAL-STATION AIR-HANDLING UNITS

PART 1 - GENERAL

1.1 RELATED DOCUMENTS

A. Drawings and general provisions of the Contract, including General and Supplementary Conditions and Division 1 Specification Sections, apply to this Section.

1.2 SUMMARY

A. This Section includes packaged, outdoor, central-station air-handling units (rooftop units) with the following components and accessories:

1. Direct-expansion cooling.
2. Economizer outdoor- and return-air damper section.
3. Roof curbs.

1.3 DEFINITIONS

A. DDC: Direct-digital controls.

B. Outdoor-Air Refrigerant Coil: Refrigerant coil in the outdoor-air stream to reject heat during cooling operations and to absorb heat during heating operations. "Outdoor air" is defined as the air outside the building or taken from outdoors and not previously circulated through the system.

C. Outdoor-Air Refrigerant-Coil Fan: The outdoor-air refrigerant-coil fan in RTUs. "Outdoor air" is defined as the air outside the building or taken from outdoors and not previously circulated through the system.

D. RTU: Rooftop unit. As used in this Section, this abbreviation means packaged, outdoor, central-station air-handling units. This abbreviation is used regardless of whether the unit is mounted on the roof or on a concrete base on ground.

E. Supply-Air Fan: The fan providing supply air to conditioned space. "Supply air" is defined as the air entering a space from air-conditioning, heating, or ventilating apparatus.

F. Supply-Air Refrigerant Coil: Refrigerant coil in the supply-air stream to absorb heat (provide cooling) during cooling operations and to reject heat (provide heating) during heating

operations. "Supply air" is defined as the air entering a space from air-conditioning, heating, or ventilating apparatus.

1.4 SUBMITTALS

A. Product Data: Include manufacturer's technical data for each RTU, including rated capacities, dimensions, required clearances, characteristics, furnished specialties, and accessories.

B. Operation and Maintenance Data: For RTUs to include in emergency, operation, and maintenance manuals.

C. Warranty: Special warranty specified in this Section.

1.5 QUALITY ASSURANCE

A. ARI Compliance:

1. Comply with ARI 210/240 and ARI 340/360 for testing and rating energy efficiencies for RTUs.

B. ASHRAE Compliance:

1. Comply with ASHRAE 15 for refrigeration system safety.
2. Comply with ASHRAE 33 for methods of testing cooling and heating coils.
3. Comply with ASHRAE/IESNA 90.1 for minimum efficiency of heating and cooling.

C. NFPA Compliance: Comply with NFPA 90A and NFPA 90B.

D. UL Compliance: Comply with UL 1995.

E. Electrical Components, Devices, and Accessories: Listed and labeled as defined in NFPA 70, Article 100, by a testing agency acceptable to authorities having jurisdiction, and marked for intended use.

1.6 WARRANTY

A. Special Warranty: Manufacturer's standard form in which manufacturer agrees to replace components of RTUs that fail in materials or workmanship within specified warranty period.

1. Warranty Period for Compressors: Manufacturer's standard, but not less than 10 years from date of Substantial Completion.
2. Warranty Period for Control Boards: Manufacturer's standard, but not less than three years from date of Substantial Completion.

1.7 EXTRA MATERIALS

A. Furnish extra materials described below that match products installed and that are packaged with protective covering for storage and identified with labels describing contents.

1. Fan Belts: One set for each belt-driven fan.
2. Filters: One set of filters for each unit.

PART 2 - PRODUCTS

2.1 MANUFACTURERS

A. Manufacturers: Subject to compliance with requirements, provide products by one of the following:

1. Carrier Corporation.
2. McQuay International.
3. Trane; American Standard Companies, Inc.
4. YORK International Corporation.

2.2 CASING

A. General Fabrication Requirements for Casings: Formed and reinforced double-wall insulated panels, fabricated to allow removal for access to internal parts and components, with joints between sections sealed.

B. Exterior Casing Material: Galvanized steel with factory-painted finish, with pitched roof panels and knockouts with grommet seals for electrical and piping connections and lifting lugs.

1. Exterior Casing Thickness: 0.079 inch thick.

C. Inner Casing Fabrication Requirements:

1. Inside Casing: Galvanized steel, 0.034 inch thick.

D. Casing Insulation and Adhesive: Comply with NFPA 90A or NFPA 90B.

1. Materials: ASTM C 1071, Type I.
2. Thickness: 1 inch.
3. Liner materials shall have air-stream surface coated with an erosion- and temperature-resistant coating or faced with a plain or coated fibrous mat or fabric.
4. Liner Adhesive: Comply with ASTM C 916, Type I.

E. Condensate Drain Pans: Formed sections of galvanized-steel sheet, a minimum of 2 inches deep, and complying with ASHRAE 62.

1. Double-Wall Construction: Fill space between walls with foam insulation and seal moisture tight.
2. Drain Connections: Threaded nipple both sides of drain pan.
3. Pan-Top Surface Coating: Corrosion-resistant compound.

2.3 FANS

A. Belt-Driven Supply-Air Fans: Double width, forward curved, centrifugal; with permanently lubricated, installed on an adjustable fan base resiliently mounted in the casing. Aluminum or painted-steel wheels, and galvanized- or painted-steel fan scrolls. Unit shall be equipped with Variable Frequency Drive (VFD, inverter). The VFD shall be provided with a metal enclosure and shall be factory-mounted, wired and tested. The VFD shall control motor speed to maintain set point static pressure at the sensor tube location of the supply duct pressure transducer (transducer is factory-provided and installed; sensor tube must be field-routed). The VFD may be field-adjustable to maintain supply duct static pressure set points from 0 in. wg to 3.5 in. wg.

B. Condenser-Coil Fan: Propeller, mounted on shaft of permanently lubricated motor.

C. Relief-Air Fan: Forward curved, shaft mounted on permanently lubricated motor.

D. Fan Motor: Comply with requirements in Division 15 Section "Motors."

2.4 COILS

A. Supply-Air Refrigerant Coil:

1. Aluminum-plate fin and seamless internally grooved copper tube in steel casing with equalizing-type vertical distributor.
2. Polymer strip shall prevent all copper coil from contacting steel coil frame or condensate pan.
3. Coil Split: Interlaced.
4. Baked phenolic coating.
5. Condensate Drain Pan: Galvanized steel with corrosion-resistant coating formed with pitch and drain connections complying with ASHRAE 62.

2.5 REFRIGERANT CIRCUIT COMPONENTS

A. Number of Refrigerant Circuits: Two.

B. Compressor: Hermetic, scroll, mounted on vibration isolators; with internal overcurrent and high-temperature protection, internal pressure relief, and crankcase heater.

C. Refrigeration Specialties:

1. Refrigerant Charge: R-22.
2. Expansion valve with replaceable thermostatic element.
3. Refrigerant filter/dryer.
4. Manual-reset high-pressure safety switch.
5. Automatic-reset low-pressure safety switch.
6. Minimum off-time relay.
7. Automatic-reset compressor motor thermal overload.
8. Brass service valves installed in compressor suction and liquid lines.
9. Low-ambient kit high-pressure sensor.
10. Hot-gas reheat solenoid valve with a replaceable magnetic coil.

11. Hot-gas bypass solenoid valve with a replaceable magnetic coil.
12. Four-way reversing valve with a replaceable magnetic coil, thermostatic expansion valves with bypass check valves, and a suction line accumulator.

2.6 AIR FILTRATION

A. Minimum arrestance according to ASHRAE 52.1, and a minimum efficiency reporting value (MERV) according to ASHRAE 52.2.

1. Glass Fiber: Minimum 30 percent arrestance, and MERV 5.

2.7 DAMPERS

A. Outdoor-Air Damper: Linked damper blades, for 0 to 25 percent outdoor air, with motorized damper filter.

B. Outdoor- and Return-Air Mixing Dampers: Parallel- or opposed-blade galvanized-steel dampers mechanically fastened to cadmium plated for galvanized-steel operating rod in reinforced cabinet. Connect operating rods with common linkage and interconnect linkages so dampers operate simultaneously.

1. Damper Motor: Modulating with adjustable minimum position.
2. Relief-Air Damper: Gravity actuated with bird screen and hood.

2.8 ELECTRICAL POWER CONNECTION

A. Provide for single connection of power to unit with unit-mounted disconnect switch accessible from outside unit and control-circuit transformer with built-in overcurrent protection.

2.9 CONTROLS

A. Control equipment and sequence of operation are specified in Division 15 Sections "HVAC Instrumentation and Controls" and "Sequence of Operation". Provided by temperature controls contractor, factory installed.

2.10 ACCESSORIES

A. Duplex, 115-V, ground-fault-interrupter outlet with 15-A overcurrent protection. Include transformer if required. Outlet shall be energized even if the unit main disconnect is open.

B. Low-ambient kit using variable-speed condenser fans for operation down to 35 deg F.

C. Filter differential pressure switch with sensor tubing on either side of filter. Set for final filter pressure loss.

D. Coil guards of painted, galvanized-steel wire.

E. Hail guards of galvanized steel, painted to match casing.

2.11 ROOF CURBS

A. Roof curbs with vibration isolators and wind or seismic restraints are specified in Division 15 Section "Vibration Controls for HVAC Piping and Equipment."

B. Materials: Galvanized steel with corrosion-protection coating, watertight gaskets, and factory-installed wood nailer; complying with NRCA standards.

1. Curb Insulation and Adhesive: Comply with NFPA 90A or NFPA 90B.

a. Materials: ASTM C 1071, Type I or II.
b. Thickness: 1-1/2 inches.

2. Application: Factory applied with adhesive and mechanical fasteners to the internal surface of curb.

a. Liner Adhesive: Comply with ASTM C 916, Type I.
b. Mechanical Fasteners: Galvanized steel, suitable for adhesive attachment, mechanical attachment, or welding attachment to duct without damaging liner when applied as recommended by manufacturer and without causing leakage in cabinet.
c. Liner materials applied in this location shall have air-stream surface coated with a temperature-resistant coating or faced with a plain or coated fibrous mat or fabric depending on service air velocity.
d. Liner Adhesive: Comply with ASTM C 916, Type I.

C. Curb Height: 18 inches.

PART 3 - EXECUTION

3.1 EXAMINATION

A. Examine substrates, areas, and conditions, with Installer present, for compliance with requirements for installation tolerances and other conditions affecting performance of RTUs.

B. Examine roughing-in for RTUs to verify actual locations of piping and duct connections before equipment installation.

C. Examine roofs for suitable conditions where RTUs will be installed.

D. Proceed with installation only after unsatisfactory conditions have been corrected.

3.2 INSTALLATION

A. Roof Curb: Install on roof structure level and secure, according to ARI Guideline B. Install RTUs on curbs and coordinate roof penetrations and flashing with roof construction specified in

Division 7 Section "Roof Accessories." Secure RTUs to upper curb rail, and secure curb base to roof framing or concrete base with anchor bolts.

3.3 CONNECTIONS

A. Install condensate drain, minimum connection size, with trap and indirect connection to nearest roof drain or area drain.

B. Install piping adjacent to RTUs to allow service and maintenance.

C. Duct installation requirements are specified in other Division 15 Sections. Drawings indicate the general arrangement of ducts. The following are specific connection requirements:

1. Install ducts to termination at top of roof curb.
2. Remove roof decking only as required for passage of ducts. Do not cut out decking under entire roof curb.
3. Connect supply ducts to RTUs with flexible duct connectors specified in Division 15 Section "Duct Accessories."
4. Install return-air duct continuously through roof structure.

3.4 FIELD QUALITY CONTROL

A. Manufacturer's Field Service: Engage a factory-authorized service representative to inspect, test, and adjust components, assemblies, and equipment installations, including connections. Report results in writing.

B. Perform tests and inspections and prepare test reports.

1. Manufacturer's Field Service: Engage a factory-authorized service representative to inspect components, assemblies, and equipment installations, including connections, and to assist in testing. Report results in writing.

C. Tests and Inspections:

1. After installing RTUs and after electrical circuitry has been energized, test units for compliance with requirements.
2. Inspect for and remove shipping bolts, blocks, and tie-down straps.
3. Operational Test: After electrical circuitry has been energized, start units to confirm proper motor rotation and unit operation.
4. Test and adjust controls and safeties. Replace damaged and malfunctioning controls and equipment.

D. Remove and replace malfunctioning units and retest as specified above.

3.5 STARTUP SERVICE

A. Engage a factory-authorized service representative to perform startup service.

B. Complete installation and startup checks according to manufacturer's written instructions and do the following:

1. Inspect for visible damage to unit casing.
2. Inspect for visible damage to compressor, coils, and fans.
3. Inspect internal insulation.
4. Verify that labels are clearly visible.
5. Verify that clearances have been provided for servicing.
6. Verify that controls are connected and operable.
7. Verify that filters are installed.
8. Clean condenser coil and inspect for construction debris.
9. Remove packing from vibration isolators.
10. Inspect operation of barometric relief dampers.
11. Verify lubrication on fan and motor bearings.
12. Inspect fan-wheel rotation for movement in correct direction without vibration and binding.
13. Adjust fan belts to proper alignment and tension.
14. Start unit according to manufacturer's written instructions.

    a. Start refrigeration system.
    b. Do not operate below recommended low-ambient temperature.
    c. Complete startup sheets and attach copy with Contractor's startup report.

15. Inspect and record performance of interlocks and protective devices; verify sequences.
16. Operate unit for an initial period as recommended or required by manufacturer.
17. Adjust and inspect high-temperature limits.
18. Inspect outdoor-air dampers for proper stroke and interlock with return-air dampers.
19. Start refrigeration system and measure and record the following when ambient is a minimum of 15 deg F above return-air temperature:

    a. Coil leaving-air, dry- and wet-bulb temperatures.
    b. Coil entering-air, dry- and wet-bulb temperatures.
    c. Outdoor-air, dry-bulb temperature.
    d. Outdoor-air-coil, discharge-air, dry-bulb temperature.

20. Inspect controls for correct sequencing of heating, mixing dampers, refrigeration, and normal and emergency shutdown.
21. Measure and record the following minimum and maximum airflows. Plot fan volumes on fan curve.

    a. Supply-air volume.
    b. Return-air volume.
    c. Relief-air volume.
    d. Outdoor-air intake volume.

22. Simulate maximum cooling demand and inspect the following:

    a. Compressor refrigerant suction and hot-gas pressures.
    b. Short circuiting of air through condenser coil or from condenser fans to outdoor-air intake.

23. After startup and performance testing and prior to Substantial Completion, replace existing filters with new filters.

3.6 CLEANING AND ADJUSTING

A. Occupancy Adjustments: When requested within 12 months of date of Substantial Completion, provide on-site assistance in adjusting system to suit actual occupied conditions. Provide up to two visits to site during other-than-normal occupancy hours for this purpose.

B. After completing system installation and testing, adjusting, and balancing RTU and air-distribution systems, clean filter housings and install new filters.

3.7 DEMONSTRATION

A. Engage a factory-authorized service representative to train Owner's maintenance personnel to adjust, operate, and maintain RTUs. Refer to Division 1 Section "Demonstration and Training."

END OF SECTION 15732

SECTION 15768
UNIT VENTILATORS

PART 1 - GENERAL

1.1 RELATED DOCUMENTS

A. Drawings and general provisions of the Contract, including General and Supplementary Conditions and Division 1 Specification Sections, apply to this Section.

1.2 SUMMARY

A. This Section includes unit ventilators and accessories with the following heating and cooling features:

1. Hydronic heating coil.
2. Direct-expansion refrigerant cooling coil.

1.3 SUBMITTALS

A. Product Data: Include rated capacities, operating characteristics, and furnished specialties and accessories for each unit type and configuration.

B. Operation and Maintenance Data: For unit ventilators to include in emergency, operation, and maintenance manuals. In addition to items specified in Division 1 Section "Operation and Maintenance Data," include the following:

1. Maintenance schedules and repair part lists for motors, coils, integral controls, and filters.

C. Warranty: Special warranty specified in this Section.

1.4 QUALITY ASSURANCE

A. Electrical Components, Devices, and Accessories: Listed and labeled as defined in NFPA 70, Article 100, by a testing agency acceptable to authorities having jurisdiction, and marked for intended use.

B. Comply with NFPA 70.

C. Comply with minimum COP/efficiency levels according to ASHRAE/IESNA 90.1.

1.5 COORDINATION

A. Coordinate size and location of wall sleeves for outdoor-air intake and relief dampers.

1.6 WARRANTY

A. Special Warranty: Manufacturer's standard form in which manufacturer agrees to repair or replace components of condensing units that fail in materials or workmanship within specified warranty period.

1. Failures include, but are not limited to, the following:

a. Compressor failure.
b. Condenser coil leak.

2. Warranty Period: Five years from date of Substantial Completion.

1.7 EXTRA MATERIALS

A. Furnish extra materials described below that match products installed and that are packaged with protective covering for storage and identified with labels describing contents.

1. Unit Ventilator Filters: Furnish one spare filter for each filter installed.

PART 2 - PRODUCTS

2.1 MANUFACTURERS

A. Available Manufacturers: Subject to compliance with requirements, manufacturers offering products that may be incorporated into the Work include, but are not limited to, the following:

1. McQuay International.
2. Trane.

2.2 MANUFACTURED UNITS

A. Description: Factory-packaged and -tested units rated according to ARI 840, ASHRAE 33, and UL 1995, including finished cabinet, filter, cooling coil, drain pan, supply-air fan and motor in blow-through configuration, and hydronic cooling coil.

2.3 CABINETS

A. Insulation: Coated glass fiber or matte-finish, closed-cell foam complying with ASTM C 1071 and attached with adhesive complying with ASTM C 916.

1. Fire-Hazard Classification: Insulation and adhesive shall have a combined maximum flame-spread index of 25 and smoke-developed index of 50 when tested according to ASTM E 84.

B. Drain Pans: Insulated galvanized steel with plastic liner, formed to slope from all directions to the drain connection as required by ASHRAE 62. Drain pan shall be removable.

C. Cabinet Frame and Access Panels: Welded-steel frame with removable panels fastened with hex-head tamperproof fasteners and key-operated control and valve access doors.

1. Steel components exposed to moisture shall be hot-dip galvanized after fabrication.

D. Cabinet Finish: Baked enamel, in manufacturer's standard paint color as selected by Architect.

E. Return-Air Inlet: Front toe space.

F. End Panels: Matching material and finish of unit ventilator.

2.4 COILS

A. Test and rate unit ventilator coils according to ASHRAE 33.

B. Hydronic Coils: Copper tube, with mechanically bonded aluminum fins spaced no closer than 0.1 inch, rated for a minimum working pressure of 200 psig and a maximum entering-water temperature of 220 deg F. Include manual air vent and drain valve.

C. Indoor Refrigerant Coils: Copper tube, with mechanically bonded aluminum fins spaced no closer than 0.1 inch, and brazed joints at fittings. Comply with ARI 210/240, and leak test to minimum 450 psig for a minimum 300-psig working pressure. Include thermal expansion valve.

2.5 INDOOR FAN

A. Fan and Motor Board: Removable.

1. Fan: Forward curved, double width, centrifugal; directly connected to motor. Thermoplastic or painted-steel wheels; and aluminum, painted-steel, or galvanized-steel fan scrolls.
2. Fan Shaft and Bearings: Hollow steel shaft with permanently lubricated, resiliently mounted bearings.
3. Motor: Permanently lubricated, multispeed, resiliently mounted on motor board. Comply with requirements in Division 15 Section "Motors."
4. Wiring Termination: Connect motor to chassis wiring with plug connection.

2.6 DAMPERS

A. Mixing Dampers: Galvanized-steel blades with edge and end seals and nylon bearings; with electric actuator.

B. Face and Bypass Dampers: Galvanized-steel damper blades with edge and end seals and nylon bearings; with factory-mounted electric actuator.

2.7 ACCESSORIES

A. Subbase: Sheet metal floor-mounting base with leveling screws and black enamel finish.

B. Insulated false back with gasket seals on wall and outdoor-air plenum.

1. Insulation: Minimum 1-inch thick, coated glass fiber or matte-finish, closed-cell foam complying with ASTM C 1071 and attached with adhesive complying with ASTM C 916.

a. Fire-Hazard Classification: Insulation and adhesive shall have a combined maximum flame-spread index of 25 and smoke-developed index of 50 when tested according to ASTM E 84.

C. Duct flanges for supply-, return-, and outdoor-air connections.

D. Filters: Minimum arrestance according to ASHRAE 52.1, and a minimum efficiency reporting value (MERV) according to ASHRAE 52.2.

1. Pleated Cotton-Polyester Media: 90 percent arrestance and 7 MERV.

E. Horizontal Blade Aluminum Louver: Aluminum masonry louver shall be constructed with horizontal chevron-type, heavy gauge aluminum blades and aluminum frame as manufactured by AAF-Herman Nelson. The louver frame shall be heavy-gauge aluminum, 2-1/2 inch deep in direction of airflow, and have weep holes along face of bottom edge. A ½-inch square mesh screen shall be provided on the interior side of the louver.

1. Louver shall come as a preassembled unit complete with a heavy gauge aluminum intake grille with square holes to match the louver opening.
2. Louver Color: Dark bronze.

2.8 REMOTE CONDENSING UNITS

A. Description: Factory assembled and tested; consisting of compressors, condenser coils, fans, motors, refrigerant receiver, and operating controls. Construct, test, and rate condensing units according to ARI 210/240 and ASHRAE 15.

B. Casing: Steel with baked-enamel finish; removable panels for access to controls, weep holes for water drainage, and mounting holes in base.

1. Casing Finish: Baked enamel, in manufacturer's standard paint color as selected by Architect.

C. Compressor: Hermetic, scroll type; internally isolated for vibration with factory-installed safety devices as follows:

1. Antirecycle timer.

2. High-pressure cutout.
3. Low-pressure cutout or loss-of-charge switch.
4. Internal thermal-overload protection.
5. Current and voltage sensitive safety devices.

D. Compressor Motor: Start capacitor, relay, and contactor. Comply with requirements in Division 15 Section "Motors."

E. Refrigerant Piping Materials:

1. Drawn-Temper Copper Tube: ASTM B 88, Type L.
2. Annealed-Temper Copper Tube: ASTM B 88, Type L.
3. Wrought-Copper Fittings: ASME B16.22.

F. Charge: R-22, R-407C or R-410A refrigerant.

G. Low ambient controls to permit operation down to 45 deg F.

H. Crankcase heater.

I. Charging and service fittings on exterior of casing.

J. Filter dryer.

K. Condenser: Copper-tube, aluminum-fin coil, with liquid subcooler.

L. Condenser Fan: Direct-drive, aluminum propeller fan; motor with thermal-overload protection.

1. Motor: Comply with requirements in Division 15 Section "Motors."

M. Accessories: Polyethylene mounting base to provide a permanent foundation.

2.9 BASIC UNIT CONTROLS

A. Control devices and operational sequences are specified in Division 15 Sections "HVAC Instrumentation and Controls" and "Sequence of Operation."

PART 3 - EXECUTION

3.1 EXAMINATION

A. Examine areas to receive unit ventilators for compliance with requirements for installation tolerances and other conditions affecting performance.

B. Examine roughing-in for piping and electrical connections to verify actual locations before unit ventilator installation.

C. Proceed with installation only after unsatisfactory conditions have been corrected.

3.2 INSTALLATION

A. Install unit ventilators to comply with NFPA 90A.

B. Install louvers per manufacturer's written instructions.

3.3 CONNECTIONS

A. Piping installation requirements are specified in other Division 15 Sections. Drawings indicate general arrangement of piping, fittings, and specialties. Specific connection requirements are as follows:

1. Install piping adjacent to machine to allow service and maintenance.
2. Connect piping to unit ventilator factory hydronic piping package. Install piping package if shipped loose.

B. Install refrigerant piping as required by Division 15 Section "Refrigerant Piping," and add refrigerant as required to compensate for length of piping.

C. Ground equipment according to Division 16 Section "Grounding and Bonding."

D. Connect wiring according to Division 16 Section "Conductors and Cables."

3.4 FIELD QUALITY CONTROL

A. Manufacturer's Field Service: Engage a factory-authorized service representative to inspect, test, and adjust field-assembled components and equipment installation, including connections, and to assist in field testing. Report results in writing.

B. Perform the following field tests and inspections and prepare test reports:

1. Operational Test: After electrical circuitry has been energized, start units to confirm proper motor rotation and unit operation.
2. Test and adjust controls and safety devices. Replace damaged and malfunctioning controls and equipment.

C. Remove and replace malfunctioning units and retest as specified above.

3.5 DEMONSTRATION

A. Engage a factory-authorized service representative to train Owner's maintenance personnel to adjust, operate, and maintain unit ventilators. Refer to Division 1 Section "Demonstration and Training."

END OF SECTION 15768

SECTION 15785
AIR-TO-AIR ENERGY RECOVERY EQUIPMENT

PART 1 - GENERAL

1.1 RELATED DOCUMENTS

A. Drawings and general provisions of the Contract, including General and Supplementary Conditions and Division 1 Specification Sections, apply to this Section.

1.2 SUMMARY

A. Section Includes:

1. Packaged energy recovery units.

1.3 SUBMITTALS

A. Product Data: For each type of product indicated. Include rated capacities, furnished specialties, and accessories.

B. Operation and Maintenance Data: For air-to-air energy recovery equipment to include in maintenance manuals.

1.4 QUALITY ASSURANCE

A. Electrical Components, Devices, and Accessories: Listed and labeled as defined in NFPA 70, by a qualified testing agency, and marked for intended location and application.

B. ARI Compliance: Capacity ratings for air-to-air energy recovery equipment shall comply with ARI 1060, "Rating Air-to-Air Energy Recovery Equipment."

C. UL Compliance: Packaged heat recovery ventilators shall comply with requirements in UL 1812, "Ducted Heat Recovery Ventilators"; or UL 1815, "Nonducted Heat Recovery Ventilators."

1.5 COORDINATION

A. Coordinate layout and installation of air-to-air energy recovery equipment and suspension system with other construction that penetrates ceilings or is supported by them, including light fixtures, HVAC equipment, fire-suppression system, and partition assemblies.

B. Coordinate sizes and locations of roof curbs, equipment supports, and roof penetrations with actual equipment provided.

1.6 WARRANTY

A. Special Warranty: Manufacturer's standard form in which manufacturer agrees to repair or replace components of air-to-air energy recovery equipment that fail in materials or workmanship within specified warranty period.

1. Warranty Period for Packaged Energy Recovery Units: Two years.

1.7 EXTRA MATERIALS

A. Furnish extra materials that match products installed and that are packaged with protective covering for storage and identified with labels describing contents.

1. Filters: One set of each type of filter specified.
2. Fan Belts: One set of belts for each belt-driven fan in energy recovery units.
3. Wheel Belts: One set of belts for each heat wheel.

PART 2 - PRODUCTS

2.1 PACKAGED ENERGY RECOVERY UNITS

A. Basis-of-Design Product: Subject to compliance with requirements, provide ER-101 Greenheck Model MV-450 or comparable product by one of the following:

1. Greenheck Fan Corporation.
2. Loren Cook Company.
3. Mitsubishi Electric & Electronics USA, Inc.; HVAC Advanced Products Division.
4. RenewAire LLC.

B. Housing: Manufacturer's standard construction with corrosion-protection coating and exterior finish, removable panels with neoprene gaskets for inspection and access to internal parts, minimum 1-inch-thick thermal insulation, knockouts for electrical and piping connections, exterior drain connection, and lifting lugs.

C. Heat Recovery Device: Heat wheel.

D. Supply and Exhaust Fans: Forward-curved, centrifugal fan with neoprene vibration isolation kit and insulated flexible duct connections.

1. Motor and Drive: Direct driven.
2. Comply with NEMA designation, temperature rating, service factor, enclosure type, and efficiency requirements for motors specified inDivision 15 Section "Common Motor Requirements for HVAC Equipment."
3. Motor Sizes: Minimum size as indicated. If not indicated, large enough so driven load will not require motor to operate in service factor range above 1.0.
4. Controllers, Electrical Devices, and Wiring: Comply with requirements for electrical devices and connections specified in Division 16 Sections.

E. Disposable Panel Filters:

1. Comply with NFPA 90A.
2. Provide filter holding frames arranged for flat or angular orientation, with access doors on both sides of unit. Filters shall be removable from one side or lift out from access plenum.
3. Factory-fabricated, viscous-coated, flat-panel type.
4. Thickness: 1 inch.
5. Initial Resistance: 0.015" wc
6. Recommended Final Resistance: 0.1" wc.
7. Media: Interlaced glass fibers sprayed with nonflammable adhesive and antimicrobial agent.
8. Frame: Galvanized steel with metal grid on outlet side, steel rod grid on inlet side, hinged, and with pull and retaining handles.

F. Piping and Wiring: Fabricate units with space within housing for piping and electrical conduits. Wire motors and controls so only external connections are required during installation.

1. Indoor Enclosure: NEMA 250, Type 12 enclosure contains relays, starters, and terminal strip.
2. Include nonfused disconnect switches.
3. Variable-speed controller to vary fan capacity from 100 to approximately 50 percent.

G. Accessories:

1. Low-Leakage, Isolation Dampers: Double-skin, airfoil-blade, galvanized-steel dampers with compressible jamb seals and extruded-vinyl blade edge seals, in opposed or parallel-blade arrangement with cadmium-plated steel operating rods rotating in stainless-steel sleeve bearings mounted in a single galvanized-steel frame, with operating rods connected with a common linkage. Leakage rate shall not exceed 5 cfm/sq. ft. at 1-inch wg and 9 cfm/sq. ft. at 4-inch wg.
2. Duct flanges.
3. Rubber-in-shear isolators for ceiling-mounted units.

2.2 PACKAGED ENERGY RECOVERY UNITS

A. Basis-of-Design Product: Subject to compliance with requirements, provide ER-102 Carrier Model 62MD H430---501 or comparable product by one of the following:

1. Carnes.
2. Carrier

3. Greenheck Fan Corporation.
4. Loren Cook Company.
5. SEMCO Incorporated.

B. Housing: Manufacturer's standard construction with corrosion-protection coating and exterior finish, hinged access doors with neoprene gaskets for inspection and access to internal parts, minimum 2-inch-thick thermal insulation, knockouts for electrical and piping connections, exterior drain connection, and lifting lugs.

1. Airstream Surfaces: Surfaces in contact with the airstream shall comply with requirements in ASHRAE 62.1-2004.
2. Inlet: Weatherproof hood, with damper for exhaust and supply.

    a. Exhaust: Spring-return, two-position, motor-operated damper.
    b. Supply: Spring-return, two-position, motor-operated damper.

3. Roof Curb: Refer to Division 7 Section "Roof Accessories" for roof curbs and equipment supports.

C. Heat Recovery Device: Heat wheel.

D. Supply and Exhaust Fans: Forward-curved, centrifugal fan with neoprene vibration isolation pads and insulated factory transition connection between ER and RTU.

1. Motor and Drive: Belt driven with adjustable sheaves, motor mounted on adjustable base.
2. Comply with NEMA designation, temperature rating, service factor, enclosure type, and efficiency requirements for motors specified inDivision 15 Section "Common Motor Requirements for HVAC Equipment."
3. Motor Sizes: Minimum size as indicated. If not indicated, large enough so driven load will not require motor to operate in service factor range above 1.0.
4. Controllers, Electrical Devices, and Wiring: Comply with requirements for electrical devices and connections specified in Division 16 Sections.

E. Disposable Panel Filters:

1. Comply with NFPA 90A.
2. Provide filter holding frames arranged for flat or angular orientation, with access doors on both sides of unit. Filters shall be removable from one side or lift out from access plenum.
3. Factory-fabricated, pleated type.
4. Thickness: 2 inches.
5. Merv (ASHRAE 52.2): 8.
6. Media: Interlaced glass fibers sprayed with nonflammable adhesive.
7. Frame: Galvanized steel with metal grid on outlet side, steel rod grid on inlet side, hinged, and with pull and retaining handles.

F. Piping and Wiring: Fabricate units with space within housing for piping and electrical conduits. Wire motors and controls so only external connections are required during installation.

G. Accessories:

1. Roof Curb: Galvanized steel with gasketing, and factory-installed wood nailer; complying with NRCA standards; minimum height of 18 inches.
2. Louvered intake weather hood with 2-inch- thick filters in V-bank configuration.
3. Exhaust weather hood with birdscreen.
4. Low-Leakage, Isolation Dampers: Double-skin, airfoil-blade, galvanized-steel dampers with compressible jamb seals and extruded-vinyl blade edge seals, in opposed or parallel-blade arrangement with cadmium-plated steel operating rods rotating in stainless-steel sleeve bearings mounted in a single galvanized-steel frame, with operating rods connected with a common linkage. Leakage rate shall not exceed 5 cfm/sq. ft. at 1-inch wg and 9 cfm/sq. ft. at 4-inch wg.
5. Duct flanges.
6. Hinged access doors with quarter-turn latches.
7. Exhaust air defrost control.

2.3 CAPACITIES AND CHARACTERISTICS

A. See Schedule on Drawings.

PART 3 - EXECUTION

3.1 EXAMINATION

A. Examine areas and conditions, with Installer present, for compliance with requirements for installation tolerances and other conditions affecting performance of the Work.

B. Examine casing insulation materials and filter media before air-to-air energy recovery equipment installation. Reject insulation materials and filter media that are wet, moisture damaged, or mold damaged.

C. Examine roughing-in for electrical services to verify actual locations of connections before installation.

D. Proceed with installation only after unsatisfactory conditions have been corrected.

3.2 INSTALLATION

A. Roof Curb: Install on roof structure, level and secure, according to NRCA's "Low-Slope Membrane Roofing Construction Details Manual," Illustration "Raised Curb Detail for Rooftop Air Handling Units and Ducts". Install air-to-air energy recovery equipment on curbs and coordinate roof penetrations and flashing with roof construction specified in Division 7 Section "Roof Accessories." Secure air-to-air energy recovery equipment to upper curb rail, and secure curb base to roof framing with anchor bolts.

B. Suspended Units: Suspend units from structural using threaded steel rods and spring hangers.

C. Install units with clearances for service and maintenance.

D. Install new filters at completion of equipment installation and before testing, adjusting, and balancing.

3.3 CONNECTIONS

A. Comply with requirements for ductwork specified in Division 15 Section "Metal Ducts."

3.4 FIELD QUALITY CONTROL

A. Perform tests and inspections.

1. Manufacturer's Field Service: Engage a factory-authorized service representative to inspect components, assemblies, and equipment installations, including connections, and to assist in testing.

B. Air-to-air energy recovery equipment will be considered defective if it does not pass tests and inspections.

C. Prepare test and inspection reports.

3.5 DEMONSTRATION

A. Engage a factory-authorized service representative to train Owner's maintenance personnel to adjust, operate, and maintain air-to-air energy recovery units.

END OF SECTION 15785

Kingscott Associates, Inc.
Architects/Engineers
Kalamazoo, Michigan

SECTION 15815
METAL DUCTS

PART 1 - GENERAL

1.1 RELATED DOCUMENTS

A. Drawings and general provisions of the Contract, including General and Supplementary Conditions and Division 1 Specification Sections, apply to this Section.

1.2 SUMMARY

A. This Section includes metal ducts for supply, return, outside, and exhaust air-distribution systems in pressure classes from minus 2- to plus 10-inch wg. Metal ducts include the following:

1. Rectangular ducts and fittings.
2. Single-wall, round, spiral-seam ducts and formed fittings.
3. Duct liner.

B. Related Sections include the following:

1. Division 15 Section "Duct Accessories" for dampers, sound-control devices, duct-mounting access doors and panels, turning vanes, and flexible ducts.

1.3 SYSTEM DESCRIPTION

A. Duct system design, as indicated, has been used to select size and type of air-moving and -distribution equipment and other air system components. Changes to layout or configuration of duct system must be specifically approved in writing by Architect. Accompany requests for layout modifications with calculations showing that proposed layout will provide original design results without increasing system total pressure.

1.4 SUBMITTALS

A. Shop Drawings: CAD-generated and drawn to 1/4 inch equals 1 foot scale. Show fabrication and installation details for metal ducts.

1. Fabrication, assembly, and installation, including plans, elevations, sections, components, and attachments to other work.
2. Duct layout indicating sizes and pressure classes.

3. Elevations of top and bottom of ducts.
4. Dimensions of main duct runs from building grid lines.
5. Fittings.
6. Reinforcement and spacing.
7. Seam and joint construction.
8. Penetrations through fire-rated and other partitions.
9. Equipment installation based on equipment being used on Project.
10. Duct accessories, including access doors and panels.
11. Hangers and supports, including methods for duct and building attachment, vibration isolation, and seismic restraints.

B. Coordination Drawings: Reflected ceiling plans, drawn to scale, on which the following items are shown and coordinated with each other, based on input from installers of the items involved:

1. Ceiling suspension assembly members.
2. Other systems installed in same space as ducts.
3. Ceiling- and wall-mounting access doors and panels required to provide access to dampers and other operating devices.
4. Ceiling-mounting items, including lighting fixtures, diffusers, grilles, speakers, sprinklers, access panels, and special moldings.

C. Welding certificates.

D. Field quality-control test reports.

1.5 QUALITY ASSURANCE

A. Welding: Qualify procedures and personnel according to AWS D1.1, "Structural Welding Code--Steel," for hangers and supports.

B. NFPA Compliance:

1. NFPA 90A, "Installation of Air Conditioning and Ventilating Systems."
2. NFPA 90B, "Installation of Warm Air Heating and Air Conditioning Systems."

PART 2 - PRODUCTS

2.1 MANUFACTURERS

A. In other Part 2 articles where titles below introduce lists, the following requirements apply to product selection:

1. Manufacturers: Subject to compliance with requirements, provide products by one of the manufacturers specified.

2.2 SHEET METAL MATERIALS

A. Comply with SMACNA's "HVAC Duct Construction Standards--Metal and Flexible" for acceptable materials, material thicknesses, and duct construction methods, unless otherwise indicated. Sheet metal materials shall be free of pitting, seam marks, roller marks, stains, discolorations, and other imperfections.

B. Galvanized Sheet Steel: Lock-forming quality; complying with ASTM A 653/A 653M and having G90 coating designation; ducts shall have mill-phosphatized finish for surfaces exposed to view.

C. Reinforcement Shapes and Plates: Galvanized-steel reinforcement where installed on galvanized sheet metal ducts.

D. Tie Rods: Galvanized steel, 1/4-inch minimum diameter for lengths 36 inches or less; 3/8-inch minimum diameter for lengths longer than 36 inches.

2.3 DUCT LINER

A. Fibrous-Glass Liner: Comply with NFPA 90A or NFPA 90B and with NAIMA AH124.

1. Manufacturers:

   a. CertainTeed Corp.; Insulation Group.
   b. Johns Manville International, Inc.
   c. Knauf Fiber Glass GmbH.
   d. Owens Corning.

2. Materials: ASTM C 1071; surfaces exposed to airstream shall be coated to prevent erosion of glass fibers.

   a. Thickness: Band and Choir Rooms: 2"; All other areas: 1".
   b. Thermal Conductivity (k-Value): 0.26 at 75 deg F mean temperature.
   c. Fire-Hazard Classification: Maximum flame-spread index of 25 and smoke-developed index of 50 when tested according to ASTM E 84.
   d. Liner Adhesive: Comply with NFPA 90A or NFPA 90B and with ASTM C 916.
   e. Mechanical Fasteners: Galvanized steel suitable for adhesive attachment, mechanical attachment, or welding attachment to duct without damaging liner when applied as recommended by manufacturer and without causing leakage in duct.

      1) Tensile Strength: Indefinitely sustain a 50-lb- tensile, dead-load test perpendicular to duct wall.
      2) Fastener Pin Length: As required for thickness of insulation and without projecting more than 1/8 inch into airstream.
      3) Adhesive for Attaching Mechanical Fasteners: Comply with fire-hazard classification of duct liner system.

2.4 SEALANT MATERIALS

A. Joint and Seam Sealants, General: The term "sealant" is not limited to materials of adhesive or mastic nature but includes tapes and combinations of open-weave fabric strips and mastics.

B. Tape Sealing System: Woven-fiber tape impregnated with gypsum mineral compound and modified acrylic/silicone activator to react exothermically with tape to form hard, durable, airtight seal.

2.5 HANGERS AND SUPPORTS

A. Building Attachments: Concrete inserts, powder-actuated fasteners, or structural-steel fasteners appropriate for construction materials to which hangers are being attached.

1. Use powder-actuated concrete fasteners for standard-weight aggregate concretes or for slabs more than 4 inches thick.
2. Exception: Do not use powder-actuated concrete fasteners for lightweight-aggregate concretes or for slabs less than 4 inches thick.

B. Hanger Materials: Galvanized sheet steel or threaded steel rod.

1. Hangers Installed in Corrosive Atmospheres: Electrogalvanized, all-thread rods or galvanized rods with threads painted with zinc-chromate primer after installation.
2. Strap and Rod Sizes: Comply with SMACNA's "HVAC Duct Construction Standards--Metal and Flexible" for steel sheet width and thickness and for steel rod diameters.
3. Galvanized-steel straps attached to aluminum ducts shall have contact surfaces painted with zinc-chromate primer.

C. Duct Attachments: Sheet metal screws, blind rivets, or self-tapping metal screws; compatible with duct materials.

D. Trapeze and Riser Supports: Steel shapes complying with ASTM A 36/A 36M.

1. Supports for Galvanized-Steel Ducts: Galvanized-steel shapes and plates.

2.6 RECTANGULAR DUCT FABRICATION

A. Fabricate ducts, elbows, transitions, offsets, branch connections, and other construction according to SMACNA's "HVAC Duct Construction Standards--Metal and Flexible" and complying with requirements for metal thickness, reinforcing types and intervals, tie-rod applications, and joint types and intervals.

1. Lengths: Fabricate rectangular ducts in lengths appropriate to reinforcement and rigidity class required for pressure class.
2. Deflection: Duct systems shall not exceed deflection limits according to SMACNA's "HVAC Duct Construction Standards--Metal and Flexible."

B. Transverse Joints: Prefabricated slide-on joints and components constructed using manufacturer's guidelines for material thickness, reinforcement size and spacing, and joint reinforcement.

C. Formed-On Flanges: Construct according to SMACNA's "HVAC Duct Construction Standards--Metal and Flexible," Figure 1-4, using corner, bolt, cleat, and gasket details.

1. Duct Size: Maximum 30 inches wide and up to 2-inch wg pressure class.
2. Longitudinal Seams: Pittsburgh lock sealed with noncuring polymer sealant.

D. Cross Breaking or Cross Beading: Cross break or cross bead duct sides 19 inches and larger and 0.0359 inch thick or less, with more than 10 sq. ft. of nonbraced panel area unless ducts are lined.

2.7 APPLICATION OF LINER IN RECTANGULAR DUCTS

A. Adhere a single layer of indicated thickness of duct liner with at least 90 percent adhesive coverage at liner contact surface area. Attaining indicated thickness with multiple layers of duct liner is prohibited.

B. Apply adhesive to transverse edges of liner facing upstream that do not receive metal nosing.

C. Butt transverse joints without gaps and coat joint with adhesive.

D. Fold and compress liner in corners of rectangular ducts or cut and fit to ensure butted-edge overlapping.

E. Do not apply liner in rectangular ducts with longitudinal joints, except at corners of ducts, unless duct size and standard liner product dimensions make longitudinal joints necessary.

F. Apply adhesive coating on longitudinal seams in ducts with air velocity of 2500 fpm.

G. Secure liner with mechanical fasteners 4 inches from corners and at intervals not exceeding 12 inches transversely; at 3 inches from transverse joints and at intervals not exceeding 18 inches longitudinally.

H. Secure transversely oriented liner edges facing the airstream with metal nosings that have either channel or "Z" profiles or are integrally formed from duct wall. Fabricate edge facings at the following locations:

1. Fan discharges.
2. Intervals of lined duct preceding unlined duct.
3. Upstream edges of transverse joints in ducts where air velocities are greater than 2500 fpm (12.7 m/s) or where indicated.

I. Terminate inner ducts with buildouts attached to fire-damper sleeves, dampers, turning vane assemblies, or other devices. Fabricated buildouts (metal hat sections) or other buildout means are optional; when used, secure buildouts to duct walls with bolts, screws, rivets, or welds.

2.8 ROUND DUCT AND FITTING FABRICATION

A. Diameter as applied to flat-oval ducts in this Article is the diameter of a round duct with a circumference equal to the perimeter of a given size of flat-oval duct.

B. Round, Spiral Lock-Seam Ducts: Fabricate supply ducts of galvanized steel according to SMACNA's "HVAC Duct Construction Standards--Metal and Flexible."

C. Duct Joints:

1. Ducts up to 20 Inches in Diameter: Interior, center-beaded slip coupling, sealed before and after fastening, attached with sheet metal screws.

D. 90-Degree Tees and Laterals and Conical Tees: Fabricate to comply with SMACNA's "HVAC Duct Construction Standards--Metal and Flexible," with metal thicknesses specified for longitudinal-seam straight ducts.

E. Diverging-Flow Fittings: Fabricate with reduced entrance to branch taps and with no excess material projecting from fitting onto branch tap entrance.

F. Fabricate elbows using die-formed, gored, pleated, or mitered construction. Bend radius of die-formed, gored, and pleated elbows shall be 1-1/2 times duct diameter. Unless elbow construction type is indicated, fabricate elbows as follows:

1. Mitered-Elbow Radius and Number of Pieces: Welded construction complying with SMACNA's "HVAC Duct Construction Standards--Metal and Flexible," unless otherwise indicated.
2. Round Mitered Elbows: Welded construction with the following metal thickness for pressure classes from minus 2- to plus 2-inch wg:

   a. Ducts 3 to 36 Inches in Diameter: 0.034 inch.

3. Round Mitered Elbows: Welded construction with the following metal thickness for pressure classes from 2- to 10-inch wg:

   a. Ducts 3 to 26 Inches in Diameter: 0.034 inch.

4. 90-Degree, 2-Piece, Mitered Elbows: Use only for supply systems or for material-handling Class A or B exhaust systems and only where space restrictions do not permit using radius elbows. Fabricate with single-thickness turning vanes.
5. Round Elbows 8 Inches and Less in Diameter: Fabricate die-formed elbows for 45- and 90-degree elbows and pleated elbows for 30, 45, 60, and 90 degrees only. Fabricate nonstandard bend-angle configurations or nonstandard diameter elbows with gored construction.
6. Round Elbows 9 through 14 Inches in Diameter: Fabricate gored or pleated elbows for 30, 45, 60, and 90 degrees unless space restrictions require mitered elbows. Fabricate nonstandard bend-angle configurations or nonstandard diameter elbows with gored construction.
7. Die-Formed Elbows for Sizes through 8 Inches in Diameter and All Pressures 0.040 inch thick with 2-piece welded construction.
8. Round Gored-Elbow Metal Thickness: Same as non-elbow fittings specified above.
9. Pleated Elbows for Sizes through 14 Inches in Diameter and Pressures through 10-Inch wg: 0.022 inch.

PART 3 - EXECUTION

3.1 DUCT APPLICATIONS

A. Static-Pressure Classes: Unless otherwise indicated, construct ducts according to the following:

1. Supply Ducts: 2-inch wg.
2. Supply Ducts (before Air Terminal Units): 2-inch wg.
3. Supply Ducts (after Air Terminal Units): 1-inch wg.
4. Supply Ducts (in Mechanical Equipment Rooms): 2-inch wg.
5. Return Ducts (Negative Pressure): 1-inch wg.
6. Exhaust Ducts (Negative Pressure): 1-inch wg.

B. All ducts shall be galvanized steel.

3.2 DUCT INSTALLATION

A. Construct and install ducts according to SMACNA's "HVAC Duct Construction Standards--Metal and Flexible," unless otherwise indicated.

B. Install round and flat-oval ducts in lengths not less than 12 feet unless interrupted by fittings.

C. Install ducts with fewest possible joints.

D. Install fabricated fittings for changes in directions, size, and shape and for connections.

E. Install couplings tight to duct wall surface with a minimum of projections into duct. Secure couplings with sheet metal screws. Install screws at intervals of 12 inches, with a minimum of 3 screws in each coupling.

F. Install ducts, unless otherwise indicated, vertically and horizontally and parallel and perpendicular to building lines; avoid diagonal runs.

G. Install ducts close to walls, overhead construction, columns, and other structural and permanent enclosure elements of building.

H. Install ducts with a clearance of 1 inch, plus allowance for insulation thickness.

I. Conceal ducts from view in finished spaces. Do not encase horizontal runs in solid partitions unless specifically indicated.

J. Coordinate layout with suspended ceiling, fire- and smoke-control dampers, lighting layouts, and similar finished work.

K. Seal all joints and seams. Apply sealant to male end connectors before insertion, and afterward to cover entire joint and sheet metal screws.

L. Electrical Equipment Spaces: Route ducts to avoid passing through transformer vaults and electrical equipment spaces and enclosures.

M. Protect duct interiors from the elements and foreign materials until building is enclosed. Follow SMACNA's "Duct Cleanliness for New Construction."

N. Paint interiors of metal ducts, that do not have duct liner, for 24 inches upstream of registers and grilles. Apply one coat of flat, black, latex finish coat over a compatible galvanized-steel primer. Paint materials and application requirements are specified in Division 9 painting Sections.

3.3 DUCT LINER INSTALLATION

A. Install duct liner in accordance with SMACNA "HVAC Duct Construction Standards".

B. Install lined ductwork 25 feet from inlet and outlet of return and supply fans. Fresh air ductwork shall be wrapped with insulation only and relief air ductwork shall not be lined if within 25 feet.

C. Install lined ductwork to all transfer air ducts and boots.

D. Install lined ductwork where shown on drawings.

3.4 SEAM AND JOINT SEALING

A. Seal duct seams and joints according to SMACNA's "HVAC Duct Construction Standards--Metal and Flexible" for duct pressure class indicated.

1. For pressure classes lower than 2-inch wg, seal transverse joints.

B. Seal ducts before external insulation is applied.

3.5 HANGING AND SUPPORTING

A. Support horizontal ducts within 24 inches of each elbow and within 48 inches of each branch intersection.

B. Support vertical ducts at maximum intervals of 16 feet and at each floor.

C. Install upper attachments to structures with an allowable load not exceeding one-fourth of failure (proof-test) load.

D. Install concrete inserts before placing concrete.

E. Install powder-actuated concrete fasteners after concrete is placed and completely cured.

1. Do not use powder-actuated concrete fasteners for lightweight-aggregate concretes or for slabs less than 4 inches thick.

3.6 CONNECTIONS

A. Make connections to equipment with flexible connectors according to Division 15 Section "Duct Accessories."

B. Comply with SMACNA's "HVAC Duct Construction Standards--Metal and Flexible" for branch, outlet and inlet, and terminal unit connections.

3.7 FIELD QUALITY CONTROL

A. Perform the following field tests and inspections according to SMACNA's "HVAC Air Duct Leakage Test Manual" and prepare test reports:

1. Disassemble, reassemble, and seal segments of systems to accommodate leakage testing and for compliance with test requirements.
2. Conduct tests at static pressures equal to maximum design pressure of system or section being tested. If pressure classes are not indicated, test entire system at maximum system design pressure. Do not pressurize systems above maximum design operating pressure. Give seven days' advance notice for testing.
3. Maximum Allowable Leakage: Comply with requirements for Leakage Class 3 for round and flat-oval ducts, Leakage Class 12 for rectangular ducts in pressure classes lower than and equal to 2-inch wg (both positive and negative pressures), and Leakage Class 6 for pressure classes from 2- to 10-inch wg.
4. Remake leaking joints and retest until leakage is equal to or less than maximum allowable.

3.8 CLEANING NEW SYSTEMS

A. Mark position of dampers and air-directional mechanical devices before cleaning, and perform cleaning before air balancing.

B. Use service openings, as required, for physical and mechanical entry and for inspection.

1. Create other openings to comply with duct standards.
2. Disconnect flexible ducts as needed for cleaning and inspection.
3. Remove and reinstall ceiling sections to gain access during the cleaning process.

C. Vent vacuuming system to the outside. Include filtration to contain debris removed from HVAC systems, and locate exhaust down wind and away from air intakes and other points of entry into building.

D. Clean the following metal duct systems by removing surface contaminants and deposits:

1. Air outlets and inlets (registers, grilles, and diffusers).
2. Supply, return, and exhaust fans including fan housings, plenums (except ceiling supply and return plenums), scrolls, blades or vanes, shafts, baffles, dampers, and drive assemblies.

3. Air-handling unit internal surfaces and components including mixing box, coil section, air wash systems, spray eliminators, condensate drain pans, humidifiers and dehumidifiers, filters and filter sections, and condensate collectors and drains.
4. Coils and related components.
5. Return-air ducts, dampers, and actuators except in ceiling plenums and mechanical equipment rooms.
6. Supply-air ducts, dampers, actuators, and turning vanes.

E. Mechanical Cleaning Methodology:

1. Clean metal duct systems using mechanical cleaning methods that extract contaminants from within duct systems and remove contaminants from building.
2. Use vacuum-collection devices that are operated continuously during cleaning. Connect vacuum device to downstream end of duct sections so areas being cleaned are under negative pressure.
3. Use mechanical agitation to dislodge debris adhered to interior duct surfaces without damaging integrity of metal ducts, duct liner, or duct accessories.
4. Clean fibrous-glass duct liner with HEPA vacuuming equipment; do not permit duct liner to get wet.
5. Clean coils and coil drain pans according to NADCA 1992. Keep drain pan operational. Rinse coils with clean water to remove latent residues and cleaning materials; comb and straighten fins.

F. Cleanliness Verification:

1. Visually inspect metal ducts for contaminants.
2. Where contaminants are discovered, re-clean and reinspect ducts.

END OF SECTION 15815

SECTION 15820
DUCT ACCESSORIES

PART 1 - GENERAL

1.1 RELATED DOCUMENTS

A. Drawings and general provisions of the Contract, including General and Supplementary Conditions and Division 1 Specification Sections, apply to this Section.

1.2 SUMMARY

A. This Section includes the following:

1. Volume dampers.
2. Fire dampers.
3. Combination fire and smoke dampers.
4. Duct silencers.
5. Turning vanes.
6. Duct-mounting access doors.
7. Flexible connectors.
8. Flexible ducts.
9. Duct accessory hardware.

B. Related Sections include the following:

1. Division 15 Section "HVAC Instrumentation and Controls" for electric and pneumatic damper actuators.

1.3 SUBMITTALS

A. Product Data: For the following:

1. Volume dampers.
2. Fire dampers.
3. Combination fire and smoke dampers.
4. Duct silencers.
5. Turning vanes.
6. Duct-mounting access doors.
7. Flexible connectors.
8. Flexible ducts.

1.4 QUALITY ASSURANCE

A. Comply with NFPA 90A, "Installation of Air Conditioning and Ventilating Systems," and NFPA 90B, "Installation of Warm Air Heating and Air Conditioning Systems."

PART 2 - PRODUCTS

2.1 MANUFACTURERS

A. In other Part 2 articles where titles below introduce lists, the following requirements apply to product selection:

1. Manufacturers: Subject to compliance with requirements, provide products by one of the manufacturers specified.

2.2 SHEET METAL MATERIALS

A. Comply with SMACNA's "HVAC Duct Construction Standards--Metal and Flexible" for acceptable materials, material thicknesses, and duct construction methods, unless otherwise indicated.

B. Galvanized Sheet Steel: Lock-forming quality; complying with ASTM A 653/A 653M and having G90 coating designation; ducts shall have mill-phosphatized finish for surfaces exposed to view.

C. Reinforcement Shapes and Plates: Galvanized-steel reinforcement where installed on galvanized sheet metal ducts; compatible materials for aluminum and stainless-steel ducts.

D. Tie Rods: Galvanized steel, 1/4-inch minimum diameter for lengths 36 inches or less; 3/8-inch minimum diameter for lengths longer than 36 inches.

2.3 VOLUME DAMPERS

A. Manufacturers:

1. Air Balance, Inc.
2. American Warming and Ventilating.
3. Flexmaster U.S.A., Inc.
4. McGill AirFlow Corporation.
5. METALAIRE, Inc.
6. Nailor Industries Inc.
7. Penn Ventilation Company, Inc.
8. Ruskin Company.
9. Vent Products Company, Inc.

B. General Description: Factory fabricated, with required hardware and accessories. Stiffen damper blades for stability. Include locking device to hold single-blade dampers in a fixed

position without vibration. Close duct penetrations for damper components to seal duct consistent with pressure class.

C. Standard Volume Dampers: Multiple- or single-blade, parallel- or opposed-blade design as indicated, standard leakage rating, with linkage outside airstream, and suitable for horizontal or vertical applications.

1. Steel Frames: Hat-shaped, galvanized sheet steel channels, minimum of 0.064 inch thick, with mitered and welded corners; frames with flanges where indicated for attaching to walls and flangeless frames where indicated for installing in ducts.
2. Roll-Formed Steel Blades: 0.064-inch- thick, galvanized sheet steel.
3. Aluminum Frames: Hat-shaped, 0.10-inch- thick, aluminum sheet channels; frames with flanges where indicated for attaching to walls; and flangeless frames where indicated for installing in ducts.
4. Roll-Formed Aluminum Blades: 0.10-inch- thick aluminum sheet.
5. Extruded-Aluminum Blades: 0.050-inch- thick extruded aluminum.
6. Blade Axles: Galvanized steel.
7. Bearings: Oil-impregnated bronze.
8. Tie Bars and Brackets: Aluminum.
9. Tie Bars and Brackets: Galvanized steel.

D. Low-Leakage Volume Dampers: Multiple- or single-blade, parallel- or opposed-blade design as indicated, low-leakage rating, with linkage outside airstream, and suitable for horizontal or vertical applications.

1. Steel Frames: Hat-shaped, galvanized sheet steel channels, minimum of 0.064 inch thick, with mitered and welded corners; frames with flanges where indicated for attaching to walls and flangeless frames where indicated for installing in ducts.
2. Roll-Formed Steel Blades: 0.064-inch- thick, galvanized sheet steel.
3. Aluminum Frames: Hat-shaped, 0.10-inch- thick, aluminum sheet channels; frames with flanges where indicated for attaching to walls and flangeless frames where indicated for installing in ducts.
4. Roll-Formed Aluminum Blades: 0.10-inch- thick aluminum sheet.
5. Extruded-Aluminum Blades: 0.050-inch- thick extruded aluminum.
6. Blade Axles: Galvanized steel.
7. Bearings: Oil-impregnated bronze thrust or ball.
8. Blade Seals: Vinyl or Neoprene.
9. Jamb Seals: Cambered stainless steel.
10. Tie Bars and Brackets: Galvanized steel.

E. Jackshaft: 1-inch- diameter, galvanized-steel pipe rotating within pipe-bearing assembly mounted on supports at each mullion and at each end of multiple-damper assemblies.

1. Length and Number of Mountings: Appropriate to connect linkage of each damper in multiple-damper assembly.

F. Damper Hardware: Zinc-plated, die-cast core with dial and handle made of 3/32-inch- thick zinc-plated steel, and a 3/4-inch hexagon locking nut. Include center hole to suit damper operating-rod size. Include elevated platform for insulated duct mounting.

2.4 FIRE DAMPERS

A. Manufacturers:

1. Air Balance, Inc.
2. CESCO Products.
3. Greenheck.
4. McGill AirFlow Corporation.
5. METALAIRE, Inc.
6. Nailor Industries Inc.
7. Penn Ventilation Company, Inc.
8. Prefco Products, Inc.
9. Ruskin Company.
10. Vent Products Company, Inc.
11. Ward Industries, Inc.

B. Fire dampers shall be labeled according to UL 555.

C. Fire Rating: 1-1/2 hours.

D. Frame: Curtain type with blades outside airstream; fabricated with roll-formed, 0.034-inch-thick galvanized steel; with mitered and interlocking corners.

E. Mounting Sleeve: Factory- or field-installed, galvanized sheet steel.

1. Minimum Thickness: 0.052 or 0.138 inch thick as indicated and of length to suit application.
2. Exceptions: Omit sleeve where damper frame width permits direct attachment of perimeter mounting angles on each side of wall or floor, and thickness of damper frame complies with sleeve requirements.

F. Mounting Orientation: Vertical or horizontal as indicated.

G. Blades: Roll-formed, interlocking, 0.034-inch- thick, galvanized sheet steel. In place of interlocking blades, use full-length, 0.034-inch- thick, galvanized-steel blade connectors.

H. Horizontal Dampers: Include blade lock and stainless-steel closure spring.

I. Fusible Links: Replaceable, 165 deg F rated.

2.5 COMBINATION FIRE AND SMOKE DAMPERS

A. Manufacturers:

1. Air Balance, Inc.
2. CESCO Products.
3. Greenheck.
4. Nailor Industries Inc.
5. Penn Ventilation Company, Inc.
6. Ruskin Company.

B. General Description: Labeled according to UL 555S. Combination fire and smoke dampers shall be labeled according to UL 555 for 1-1/2-hour rating.

C. Fusible Links: Replaceable, 165 deg F rated.

D. Frame and Blades: 0.064-inch- thick, galvanized sheet steel.

E. Mounting Sleeve: Factory-installed, 0.052-inch- thick, galvanized sheet steel; length to suit wall or floor application.

F. Damper Motors: Modulating and two-position action.

1. Comply with requirements in Division 15 Section "Motors."
2. Permanent-Split-Capacitor or Shaded-Pole Motors: With oil-immersed and sealed gear trains.
3. Spring-Return Motors: Equip with an integral spiral-spring mechanism where indicated. Enclose entire spring mechanism in a removable housing designed for service or adjustments. Size for running torque rating of 150 in. x lbf and breakaway torque rating of 150 in. x lbf.
4. Outdoor Motors and Motors in Outside-Air Intakes: Equip with O-ring gaskets designed to make motors weatherproof. Equip motors with internal heaters to permit normal operation at minus 40 deg F.
5. Nonspring-Return Motors: For dampers larger than 25 sq. ft., size motor for running torque rating of 150 in. x lbf and breakaway torque rating of 300 in. x lbf.
6. Electrical Connection: 115 V, single phase, 60 Hz.

2.6 DUCT SILENCERS

A. Manufacturers:

1. Industrial Noise Control, Inc.
2. McGill AirFlow Corporation.
3. Ruskin Company.
4. Vibro-Acoustics.

B. General Description: Factory-fabricated and -tested, round or rectangular silencers with performance characteristics and physical requirements as indicated.

C. Fire Performance: Adhesives, sealants, packing materials, and accessory materials shall have fire ratings not exceeding 25 for flame-spread index and 50 for smoke-developed index when tested according to ASTM E 84.

D. Rectangular Units: Fabricate casings with a minimum of 0.034-inch- thick, solid galvanized sheet metal for outer casing and 0.022-inch- thick, ASTM A 653/A 653M, G90, perforated galvanized sheet metal for inner casing.

E. Sheet Metal Perforations: 1/8-inch diameter for inner casing and baffle sheet metal.

F. Fill Material: Moisture-proof nonfibrous material.

1. Erosion Barrier: Polymer bag enclosing fill and heat-sealed before assembly.

G. Fabricate silencers to form rigid units that will not pulsate, vibrate, rattle, or otherwise react to system pressure variations.

1. Do not use nuts, bolts, or sheet metal screws for unit assemblies.
2. Lock form and seal or continuously weld joints.
3. Suspended Units: Factory-installed suspension hooks or lugs attached to frame in quantities and spaced to prevent deflection or distortion.
4. Reinforcement: Cross or trapeze angles for rigid suspension.

H. Source Quality Control:

1. Acoustic Performance: Test according to ASTM E 477.
2. Record acoustic ratings, including dynamic insertion loss and self-noise power levels with an airflow of at least 2000-fpm face velocity.
3. Leak Test: Test units for airtightness at 200 percent of associated fan static pressure or 6-inch wg static pressure, whichever is greater.

2.7 TURNING VANES

A. Fabricate to comply with SMACNA's "HVAC Duct Construction Standards--Metal and Flexible" for vanes and vane runners. Vane runners shall automatically align vanes.

B. Manufactured Turning Vanes: Fabricate 1-1/2-inch- wide, single or double-vane, curved blades of galvanized sheet steel set 3/4 inch o.c.; support with bars perpendicular to blades set 2 inches o.c.; and set into vane runners suitable for duct mounting.

1. Manufacturers:

a. Ductmate Industries, Inc.
b. Duro Dyne Corp.
c. METALAIRE, Inc.
d. Ward Industries, Inc.

C. Acoustic Turning Vanes: Fabricate airfoil-shaped aluminum extrusions with perforated faces and fibrous-glass fill.

2.8 DUCT-MOUNTING ACCESS DOORS

A. General Description: Fabricate doors airtight and suitable for duct pressure class.

B. Door: Double wall, duct mounting, and rectangular; fabricated of galvanized sheet metal with insulation fill and thickness as indicated for duct pressure class. Include vision panel where indicated. Include 1-by-1-inch butt or piano hinge and cam latches.

1. Manufacturers:

a. American Warming and Ventilating.
b. CESCO Products.

c. Ductmate Industries, Inc.
d. Flexmaster U.S.A., Inc.
e. Greenheck.
f. McGill AirFlow Corporation.
g. Nailor Industries Inc.
h. Ventfabrics, Inc.
i. Ward Industries, Inc.

2. Frame: Galvanized sheet steel, with bend-over tabs and foam gaskets.
3. Provide number of hinges and locks as follows:

a. Less Than 12 Inches Square: Secure with two sash locks.
b. Up to 18 Inches Square: Two hinges and two sash locks.
c. Up to 24 by 48 Inches: Three hinges and two compression latches with outside and inside handles.
d. Sizes 24 by 48 Inches and Larger: One additional hinge.

C. Seal around frame attachment to duct and door to frame with neoprene or foam rubber.

D. Insulation: 1-inch- thick, fibrous-glass or polystyrene-foam board.

2.9 FLEXIBLE CONNECTORS

A. Manufacturers:

1. Duro Dyne Corp.
2. Ventfabrics, Inc.
3. Ward Industries, Inc.

B. General Description: Flame-retardant or noncombustible fabrics, coatings, and adhesives complying with UL 181, Class 1.

C. Metal-Edged Connectors: Factory fabricated with a fabric strip 3-1/2 inches wide attached to two strips of 2-3/4-inch- wide, 0.028-inch- thick, galvanized sheet steel or 0.032-inch- thick aluminum sheets. Select metal compatible with ducts.

D. Indoor System, Flexible Connector Fabric: Glass fabric double coated with neoprene.

1. Minimum Weight: 26 oz./sq. yd..
2. Tensile Strength: 480 lbf/inch in the warp and 360 lbf/inch in the filling.
3. Service Temperature: Minus 40 to plus 200 deg F.

2.10 FLEXIBLE DUCTS

A. Manufacturers:

1. Flexmaster U.S.A., Inc.
2. Hart & Cooley, Inc.
3. McGill AirFlow Corporation.

B. Insulated-Duct Connectors: UL 181, Class 1, 2-ply vinyl film supported by helically wound, spring-steel wire; fibrous-glass insulation; polyethylene or aluminized vapor barrier film.

1. Pressure Rating: 10-inch wg positive and 1.0-inch wg negative.
2. Maximum Air Velocity: 4000 fpm.
3. Temperature Range: Minus 10 to plus 160 deg F.

C. Flexible Duct Clamps: Stainless-steel band with cadmium-plated hex screw to tighten band with a worm-gear action, in sizes 3 through 18 inches to suit duct size.

2.11 DUCT ACCESSORY HARDWARE

A. Instrument Test Holes: Cast iron or cast aluminum to suit duct material, including screw cap and gasket. Size to allow insertion of pitot tube and other testing instruments and of length to suit duct insulation thickness.

B. Adhesives: High strength, quick setting, neoprene based, waterproof, and resistant to gasoline and grease.

PART 3 - EXECUTION

3.1 APPLICATION AND INSTALLATION

A. Install duct accessories according to applicable details in SMACNA's "HVAC Duct Construction Standards--Metal and Flexible" for metal ducts and in NAIMA AH116, "Fibrous Glass Duct Construction Standards," for fibrous-glass ducts.

B. Provide duct accessories of materials suited to duct materials; use galvanized-steel accessories in galvanized-steel and fibrous-glass ducts, stainless-steel accessories in stainless-steel ducts, and aluminum accessories in aluminum ducts.

C. Install volume dampers in ducts with liner; avoid damage to and erosion of duct liner.

D. Provide balancing dampers at points on supply, return, and exhaust systems where branches lead from larger ducts as required for air balancing. Install at a minimum of two duct widths from branch takeoff.

E. Provide test holes at fan inlets and outlets and elsewhere as indicated.

F. Install fire and smoke dampers with fusible links, according to manufacturer's UL-approved written instructions.

G. Install duct silencers independent of ducts with flexible duct connectors, lagged with loaded vinyl sheet on inlets and outlets.

H. Install duct silencers independent of ducts with flexible duct connectors, lagged with loaded vinyl sheet on inlets and outlets.

I. Install duct access doors to allow for inspecting, adjusting, and maintaining accessories and terminal units as follows:

1. On both sides of duct coils.
2. Downstream from volume dampers, turning vanes, and equipment.
3. To interior of ducts for cleaning; before and after each change in direction, at maximum 50-foot spacing.
4. On sides of ducts where adequate clearance is available.

J. Install the following sizes for duct-mounting, rectangular access doors:

1. One-Hand or Inspection Access: 8 by 5 inches.
2. Two-Hand Access: 12 by 6 inches.
3. Head and Hand Access: 18 by 10 inches.
4. Head and Shoulders Access: 21 by 14 inches.
5. Body Access: 25 by 14 inches.
6. Body Plus Ladder Access: 25 by 17 inches.

K. Install the following sizes for duct-mounting, round access doors:

1. One-Hand or Inspection Access: 8 inches in diameter.
2. Two-Hand Access: 10 inches in diameter.
3. Head and Hand Access: 12 inches in diameter.
4. Head and Shoulders Access: 18 inches in diameter.
5. Body Access: 24 inches in diameter.

L. Label access doors according to Division 15 Section "Mechanical Identification."

M. Install flexible connectors immediately adjacent to equipment in ducts associated with fans and motorized equipment supported by vibration isolators.

N. For fans developing static pressures of 5-inch wg and higher, cover flexible connectors with loaded vinyl sheet held in place with metal straps.

O. Connect terminal units to supply ducts directly or with maximum 12-inch lengths of flexible duct. Do not use flexible ducts to change directions.

P. Connect diffusers or light troffer boots to low pressure ducts directly or with maximum 60-inch lengths of flexible duct clamped or strapped in place.

Q. Connect flexible ducts to metal ducts with adhesive plus sheet metal screws.

R. Install duct test holes where indicated and required for testing and balancing purposes.

3.2 ADJUSTING

A. Adjust duct accessories for proper settings.

B. Adjust fire and smoke dampers for proper action.

C. Final positioning of manual-volume dampers is specified in Division 15 Section "Testing, Adjusting, and Balancing."

END OF SECTION 15820

SECTION 15838
POWER VENTILATORS

PART 1 - GENERAL

1.1 RELATED DOCUMENTS

A. Drawings and general provisions of the Contract, including General and Supplementary Conditions and Division 1 Specification Sections, apply to this Section.

1.2 SUMMARY

A. This Section includes the following:

1. Centrifugal roof ventilators.

1.3 PERFORMANCE REQUIREMENTS

A. Project Altitude: Base fan-performance ratings on sea level.

B. Operating Limits: Classify according to AMCA 99.

1.4 SUBMITTALS

A. Product Data: Include rated capacities, furnished specialties, and accessories for each type of product indicated and include the following:

1. Certified fan performance curves with system operating conditions indicated.
2. Certified fan sound-power ratings.
3. Motor ratings and electrical characteristics, plus motor and electrical accessories.
4. Material thickness and finishes, including color charts.
5. Dampers, including housings, linkages, and operators.
6. Roof curbs.
7. Fan speed controllers.

B. Coordination Drawings: Reflected ceiling plans and other details, drawn to scale, on which the following items are shown and coordinated with each other, based on input from installers of the items involved:

1. Roof framing and support members relative to duct penetrations.
2. Ceiling suspension assembly members.

3. Size and location of initial access modules for acoustical tile.
4. Ceiling-mounted items including light fixtures, diffusers, grilles, speakers, sprinklers, access panels, and special moldings.

C. Field quality-control test reports.

D. Operation and Maintenance Data: For power ventilators to include in emergency, operation, and maintenance manuals.

1.5 QUALITY ASSURANCE

A. Electrical Components, Devices, and Accessories: Listed and labeled as defined in NFPA 70, Article 100, by a testing agency acceptable to authorities having jurisdiction, and marked for intended use.

B. AMCA Compliance: Products shall comply with performance requirements and shall be licensed to use the AMCA-Certified Ratings Seal.

C. NEMA Compliance: Motors and electrical accessories shall comply with NEMA standards.

D. UL Standard: Power ventilators shall comply with UL 705.

1.6 DELIVERY, STORAGE, AND HANDLING

A. Deliver fans as factory-assembled unit, to the extent allowable by shipping limitations, with protective crating and covering.

B. Disassemble and reassemble units, as required for moving to final location, according to manufacturer's written instructions.

C. Lift and support units with manufacturer's designated lifting or supporting points.

1.7 COORDINATION

A. Coordinate size and location of structural-steel support members.

B. Coordinate installation of roof curbs, equipment supports, and roof penetrations. These items are specified in Division 7 Section "Roof Accessories."

1.8 EXTRA MATERIALS

A. Furnish extra materials described below that match products installed and that are packaged with protective covering for storage and identified with labels describing contents.

1. Belts: One set for each belt-driven unit.

PART 2 - PRODUCTS

2.1 CENTRIFUGAL ROOF VENTILATORS

A. Manufacturers: Subject to compliance with requirements, provide products by one of the following:

1. Acme Engineering & Mfg. Corp.
2. Carnes Company HVAC.
3. Greenheck.
4. Loren Cook Company.
5. Penn Ventilation.

B. Description: Direct- or belt-driven centrifugal fans consisting of housing, wheel, fan shaft, bearings, motor and disconnect switch, drive assembly, curb base, and accessories.

C. Housing: Removable, spun-aluminum, dome top and outlet baffle; square, one-piece, aluminum base with venturi inlet cone.

D. Fan Wheels: Aluminum hub and wheel with backward-inclined blades.

E. Accessories:

1. Disconnect Switch: Nonfusible type, with thermal-overload protection mounted inside fan housing, factory wired through an internal aluminum conduit.
2. Bird Screens: Removable, 1/2-inch mesh, aluminum or brass wire.
3. Motorized Dampers: Parallel-blade dampers mounted in curb base with electric actuator; wired to close when fan stops.

F. Roof Curbs: Galvanized steel; mitered and welded corners; 1-1/2-inch- thick, rigid, fiberglass insulation adhered to inside walls; and 1-1/2-inch wood nailer. Size as required to suit roof opening and fan base.

1. Configuration: Self-flashing without a cant strip, with mounting flange.
2. Overall Height: 18 inches.

2.2 MOTORS

A. Comply with requirements in Division 15 Section "Motors."

B. Enclosure Type: Totally enclosed, fan cooled.

2.3 SOURCE QUALITY CONTROL

A. Sound-Power Level Ratings: Comply with AMCA 301, "Methods for Calculating Fan Sound Ratings from Laboratory Test Data." Factory test fans according to AMCA 300, "Reverberant Room Method for Sound Testing of Fans." Label fans with the AMCA-Certified Ratings Seal.

B. Fan Performance Ratings: Establish flow rate, pressure, power, air density, speed of rotation, and efficiency by factory tests and ratings according to AMCA 210, "Laboratory Methods of Testing Fans for Rating."

PART 3 - EXECUTION

3.1 INSTALLATION

A. Install power ventilators level and plumb.

B. Secure roof-mounting fans to roof curbs with cadmium-plated hardware. Refer to Division 7 Section "Roof Accessories" for installation of roof curbs.

C. Install units with clearances for service and maintenance.

D. Label units according to requirements specified in Division 15 Section "Mechanical Identification."

3.2 CONNECTIONS

A. Duct installation and connection requirements are specified in other Division 15 Sections. Drawings indicate general arrangement of ducts and duct accessories. Make final duct connections with flexible connectors. Flexible connectors are specified in Division 15 Section "Duct Accessories."

B. Install ducts adjacent to power ventilators to allow service and maintenance.

C. Ground equipment according to Division 16 Section "Grounding and Bonding."

D. Connect wiring according to Division 16 Section "Conductors and Cables."

3.3 FIELD QUALITY CONTROL

A. Perform the following field tests and inspections and prepare test reports:

1. Verify that shipping, blocking, and bracing are removed.
2. Verify that unit is secure on mountings and supporting devices and that connections to ducts and electrical components are complete. Verify that proper thermal-overload protection is installed in motors, starters, and disconnect switches.
3. Verify that cleaning and adjusting are complete.
4. Disconnect fan drive from motor, verify proper motor rotation direction, and verify fan wheel free rotation and smooth bearing operation. Reconnect fan drive system, align and adjust belts, and install belt guards.
5. Adjust damper linkages for proper damper operation.
6. Verify lubrication for bearings and other moving parts.
7. Disable automatic temperature-control operators, energize motor and adjust fan to indicated rpm, and measure and record motor voltage and amperage.
8. Shut unit down and reconnect automatic temperature-control operators.

9. Remove and replace malfunctioning units and retest as specified above.

B. Test and adjust controls and safeties. Replace damaged and malfunctioning controls and equipment.

3.4 ADJUSTING

A. Adjust damper linkages for proper damper operation.

B. Refer to Division 15 Section "Testing, Adjusting, and Balancing" for testing, adjusting, and balancing procedures.

C. Replace fan and motor pulleys as required to achieve design airflow.

D. Lubricate bearings.

END OF SECTION 15838

SECTION 15840
AIR TERMINAL UNITS

PART 1 - GENERAL

1.1 RELATED DOCUMENTS

A. Drawings and general provisions of the Contract, including General and Supplementary Conditions and Division 1 Specification Sections, apply to this Section.

1.2 SUMMARY

A. This Section includes the following:

1. Shutoff single-duct air terminal units.

1.3 SUBMITTALS

A. Product Data: For each type of product indicated, include rated capacities, furnished specialties, sound-power ratings, and accessories.

B. Operation and Maintenance Data: For air terminal units to include in emergency, operation, and maintenance manuals. In addition to items specified in Division 1 Section "Operation and Maintenance Data," include the following:

1. Instructions for resetting minimum and maximum air volumes.
2. Instructions for adjusting software set points.

1.4 QUALITY ASSURANCE

A. Product Options: Drawings indicate size, profiles, and dimensional requirements of air terminal units and are based on the specific system indicated. Refer to Division 1 Section "Product Requirements."

B. Electrical Components, Devices, and Accessories: Listed and labeled as defined in NFPA 70, Article 100, by a testing agency acceptable to authorities having jurisdiction, and marked for intended use.

C. NFPA Compliance: Install air terminal units according to NFPA 90A, "Standard for the Installation of Air Conditioning and Ventilating Systems."

1.5 COORDINATION

A. Coordinate layout and installation of air terminal units and suspension system with other construction that penetrates ceilings or is supported by them, including light fixtures, HVAC equipment, fire-suppression system, and partition assemblies.

PART 2 - PRODUCTS

2.1 MANUFACTURERS

A. In other Part 2 articles where titles below introduce lists, the following requirements apply to product selection:

1. Manufacturers: Subject to compliance with requirements, provide products by one of the manufacturers specified.

2.2 SHUTOFF SINGLE-DUCT AIR TERMINAL UNITS

A. Manufacturers:

1. Anemostat; a Mestek Company.
2. Carnes.
3. Environmental Technologies, Inc.; Enviro-Air Div.
4. Krueger.
5. METALAIRE, Inc.; Metal Industries Inc.
6. Nailor Industries of Texas Inc.
7. Price Industries.
8. Titus.

B. Configuration: Volume-damper assembly inside unit casing with control components located inside a protective metal shroud.

C. Casing: 0.034-inch steel.

1. Casing Lining: 1-inch- thick, coated, fibrous-glass duct liner complying with ASTM C 1071; secured with adhesive.
2. Casing Lining: Adhesive attached, 3/4-inch- thick, polyurethane foam insulation complying with UL 181 erosion requirements, and having a maximum flame-spread index of 25 and a maximum smoke-developed index of 50, for both insulation and adhesive, when tested according to ASTM E 84.
3. Air Inlet: Round stub connection or S-slip and drive connections for duct attachment.
4. Air Outlet: S-slip and drive connections.
5. Access: Removable panels for access to dampers and other parts requiring service, adjustment, or maintenance; with airtight gasket.

D. Regulator Assembly: Extruded-aluminum or galvanized-steel components; key damper blades onto shaft with nylon-fitted pivot points located inside unit casing.

1. Automatic Flow-Control Assembly: Combined spring rates shall be matched for each volume-regulator size with machined dashpot for stable operation.
2. Factory-calibrated and field-adjustable assembly with shaft extension for connection to externally mounted control actuator.

E. Volume Damper: Galvanized steel with peripheral gasket and self-lubricating bearings.

1. Maximum Damper Leakage: ARI 880 rated, 2 percent of nominal airflow at 3-inch wg inlet static pressure.

F. Hot-Water Heating Coil: Copper tube, mechanically expanded into aluminum-plate fins; leak tested underwater to 200 psig; and factory installed.

G. Electric Heating Coil: Slip-in-type, open-coil design with integral control box factory wired and installed. Include the following features:

1. Primary and secondary overtemperature protection.
2. Nickel chrome 80/20 heating elements.
3. Airflow switch.
4. Noninterlocking disconnect switch.
5. Mercury contactors.
6. Pneumatic-electric switches and relays.
7. Magnetic contactor for each step of control (for three-phase coils).

H. DDC Controls: Single-package unitary controller and actuator specified in Division 15 Section "HVAC Instrumentation and Controls." Controls provided by temperature controls contractor, factory installed.

2.3 SOURCE QUALITY CONTROL

A. Identification: Label each air terminal unit with plan number, nominal airflow, maximum and minimum factory-set airflows, coil type, and ARI certification seal.

B. Verification of Performance: Rate air terminal units according to ARI 880.

PART 3 - EXECUTION

3.1 INSTALLATION

A. Install air terminal units level and plumb. Maintain sufficient clearance for normal service and maintenance.

3.2 CONNECTIONS

A. Piping installation requirements are specified in other Division 15 Sections. Drawings indicate general arrangement of piping, fittings, and specialties.

B. Install piping adjacent to air terminal units to allow service and maintenance.

C. Hot-Water Piping: In addition to requirements in Division 15 Section "Hydronic Piping," connect heating coils to supply with shutoff valve, strainer, control valve, and union or flange; and to return with balancing valve and union or flange.

D. Connect ducts to air terminal units according to Division 15 Section "Metal Ducts."

E. Ground units with electric heating coils according to Division 16 Section "Grounding and Bonding".

F. Connect wiring according to Division 16 Section "Conductors and Cables".

G. Tighten electrical connectors and terminals according to manufacturer's published torque-tightening values. If manufacturer's torque values are not indicated, use those specified in UL 486A and UL 486B.

3.3 FIELD QUALITY CONTROL

A. Perform the following field tests and inspections and prepare test reports:

1. After installing air terminal units and after electrical circuitry has been energized, test for compliance with requirements.
2. Leak Test: After installation, fill water coils and test for leaks. Repair leaks and retest until no leaks exist.
3. Operational Test: After electrical circuitry has been energized, start units to confirm proper motor rotation and unit operation.
4. Test and adjust controls and safeties. Replace damaged and malfunctioning controls and equipment.

B. Remove and replace malfunctioning units and retest as specified above.

END OF SECTION 15840

SECTION 15855
DIFFUSERS, REGISTERS, AND GRILLES

PART 1 - GENERAL

1.1 RELATED DOCUMENTS

A. Drawings and general provisions of the Contract, including General and Supplementary Conditions and Division 1 Specification Sections, apply to this Section.

1.2 SUMMARY

A. This Section includes ceiling- and wall-mounted diffusers, registers, and grilles.

B. Related Sections include the following:

1. Division 10 Section "Louvers and Vents" for fixed and adjustable louvers and wall vents, whether or not they are connected to ducts.
2. Division 15 Section "Duct Accessories" for fire and smoke dampers and volume-control dampers not integral to diffusers, registers, and grilles.

1.3 SUBMITTALS

A. Product Data: For each product indicated, include the following:

1. Data Sheet: Indicate materials of construction, finish, and mounting details; and performance data including throw and drop, static-pressure drop, and noise ratings.
2. Diffuser, Register, and Grille Schedule: Indicate Drawing designation, room location, quantity, model number, size, and accessories furnished.

B. Samples for Verification: For diffusers, registers, and grilles, in manufacturer's standard sizes to verify color selected.

PART 2 - PRODUCTS

2.1 MANUFACTURERS

A. In other Part 2 articles where titles below introduce lists, the following requirements apply to product selection:

1. Manufacturers: Subject to compliance with requirements, provide products by one of the manufacturers specified.

2.2 GRILLES AND REGISTERS

A. Fixed Face:

1. Manufacturers:

   a. Anemostat; a Mestek Company.
   b. Carnes.
   c. Hart & Cooley, Inc.; Hart & Cooley Div.
   d. Krueger.
   e. Nailor Industries of Texas Inc.
   f. Price Industries.
   g. Titus.
   h. Tuttle & Bailey.

2. Material: Steel or Aluminum.
3. Finish: Baked enamel, white.
4. Face Arrangement: 1/2-by-1/2-by-1/2-inch grid core.

2.3 CEILING DIFFUSER OUTLETS

A. Square Ceiling Diffusers:

1. Manufacturers:

   a. Anemostat; a Mestek Company.
   b. Carnes.
   c. Hart & Cooley, Inc.; Hart & Cooley Div.
   d. Krueger.
   e. Nailor Industries of Texas Inc.
   f. Price Industries.
   g. Titus.
   h. Tuttle & Bailey.

2. Material: Steel.
3. Finish: Baked enamel, white.
4. Face Size: 24 by 24 inches or 12 by 12 inches.
5. Face Style: Four cone.

2.4 SOURCE QUALITY CONTROL

A. Verification of Performance: Rate diffusers, registers, and grilles according to ASHRAE 70, "Method of Testing for Rating the Performance of Air Outlets and Inlets."

PART 3 - EXECUTION

3.1 EXAMINATION

A. Examine areas where diffusers, registers, and grilles are to be installed for compliance with requirements for installation tolerances and other conditions affecting performance of equipment.

B. Proceed with installation only after unsatisfactory conditions have been corrected.

3.2 INSTALLATION

A. Install diffusers, registers, and grilles level and plumb.

B. Ceiling-Mounted Outlets and Inlets: Drawings indicate general arrangement of ducts, fittings, and accessories. Air outlet and inlet locations have been indicated to achieve design requirements for air volume, noise criteria, airflow pattern, throw, and pressure drop. Make final locations where indicated, as much as practicable. For units installed in lay-in ceiling panels, locate units in the center of panel. Where architectural features or other items conflict with installation, notify Architect for a determination of final location.

C. Install diffusers, registers, and grilles with airtight connections to ducts and to allow service and maintenance of dampers, air extractors, and fire dampers.

3.3 ADJUSTING

A. After installation, adjust diffusers, registers, and grilles to air patterns indicated, or as directed, before starting air balancing.

END OF SECTION 15855

SECTION 15900
HVAC INSTRUMENTATION AND CONTROLS

PART 1 - GENERAL

1.1 RELATED DOCUMENTS

A. Drawings and general provisions of the Contract, including General and Supplementary Conditions and Division 1 Specification Sections, apply to this Section.

1.2 SUMMARY

A. This Section includes control equipment for HVAC systems and components, including control components for terminal heating and cooling units not supplied with factory-wired controls.

B. Related Sections include the following:

1. Division 15 Section "Sequence of Operation" for requirements that relate to this Section.

1.3 DEFINITIONS

A. DDC: Direct digital control.

B. I/O: Input/output.

C. LonWorks: A control network technology platform for designing and implementing interoperable control devices and networks.

D. MS/TP: Master slave/token passing.

E. PC: Personal computer.

F. PID: Proportional plus integral plus derivative.

G. RTD: Resistance temperature detector.

1.4 SEQUENCE OF OPERATION See Section 15940 "Sequence of Operations.

1.5 SUBMITTALS

A. Shop Drawings: Detail equipment assemblies and indicate dimensions, weights, loads, required clearances, method of field assembly, components, and location and size of each field connection.

1. Bill of materials of equipment indicating quantity, manufacturer, and model number.
2. Schematic flow diagrams showing fans, pumps, coils, dampers, valves, and control devices.
3. Wiring Diagrams: Power, signal, and control wiring.
4. Details of control panel faces, including controls, instruments, and labeling.
5. Written description of sequence of operation.
6. Schedule of dampers including size, leakage, and flow characteristics.
7. Schedule of valves including flow characteristics.
8. Controlled Systems:

a. Schematic diagrams of each controlled system with control points labeled and control elements graphically shown, with wiring.
b. Written description of sequence of operation including schematic diagram.
c. Points list.

B. Field quality-control test reports.

C. Operation and Maintenance Data.

1.6 QUALITY ASSURANCE

A. Electrical Components, Devices, and Accessories: Listed and labeled as defined in NFPA 70, Article 100, by a testing agency acceptable to authorities having jurisdiction, and marked for intended use.

B. Comply with ASHRAE 135 for DDC system components.

1.7 DELIVERY, STORAGE, AND HANDLING

A. Factory-Mounted Components: Where control devices specified in this Section are indicated to be factory mounted on equipment, arrange for shipping of control devices to equipment manufacturer.

1.8 COORDINATION

A. Coordinate location of thermostats, humidistats, and other exposed control sensors with plans and room details before installation.

B. Coordinate supply of conditioned electrical branch circuits for control units and operator workstation.

C. Coordinate equipment with Division 16 Section "Electrical Power Monitoring and Control" to achieve compatibility of communication interfaces.

D. Coordinate equipment with Division 16 Section "Panelboards" to achieve compatibility with starter coils and annunciation devices.

E. Coordinate equipment with Division 16 Section "Motor-Control Centers" to achieve compatibility with motor starters and annunciation devices.

PART 2 - PRODUCTS

2.1 CONTROL SYSTEM

A. Manufacturers:

1. Andover Controls Corporation.

B. Control system shall consist of sensors, indicators, actuators, final control elements, interface equipment, other apparatus, and accessories to control mechanical systems.

2.2 UNITARY CONTROLLERS

A. Unitized, capable of stand-alone operation with sufficient memory to support its operating system, database, and programming requirements, and with sufficient I/O capacity for the application.

1. Configuration: Local keypad and display; diagnostic LEDs for power, communication, and processor; wiring termination to terminal strip or card connected with ribbon cable; memory with bios; and 72-hour battery backup.
2. Operating System: Manage I/O communication to allow distributed controllers to share real and virtual object information and allow central monitoring and alarms. Perform scheduling with real-time clock. Perform automatic system diagnostics; monitor system and report failures.
3. Enclosure: Dustproof rated for operation at 32 to 120 deg F.

2.3 ALARM PANELS

A. Unitized cabinet with suitable brackets for wall or floor mounting. Fabricate of 0.06-inch-thick, furniture-quality steel or extruded-aluminum alloy, totally enclosed, with hinged doors and keyed lock and with manufacturer's standard shop-painted finish. Provide common keying for all panels.

B. Indicating light for each alarm point, single horn, acknowledge switch, and test switch, mounted on hinged cover.

1. Alarm Condition: Indicating light flashes and horn sounds.
2. Acknowledge Switch: Horn is silent and indicating light is steady.
3. Second Alarm: Horn sounds and indicating light is steady.

4. Alarm Condition Cleared: System is reset and indicating light is extinguished.
5. Contacts in alarm panel allow remote monitoring by independent alarm company.

2.4 ELECTRONIC SENSORS

A. Description: Vibration and corrosion resistant; for wall, immersion, or duct mounting as required.

B. RTDs and Transmitters:

1. Accuracy: Plus or minus 0.2 percent at calibration point.
2. Wire: Twisted, shielded-pair cable.
3. Insertion Elements in Ducts: Single point, 8 inches long; use where not affected by temperature stratification or where ducts are smaller than 9 sq. ft.
4. Averaging Elements in Ducts: Use where prone to temperature stratification length as required.
5. Insertion Elements for Liquids: Brass socket with minimum insertion length of 2-1/2 inches.
6. Room Sensor Cover Construction: Manufacturer's standard locking covers.

    a. Set-Point Adjustment: Concealed.
    b. Set-Point Indication: Concealed.
    c. Thermometer: Concealed.
    d. Color: Match wall finish.
    e. Orientation: Vertical.

7. Room Security Sensors: Stainless-steel cover plate with insulated back and security screws.

C. Pressure Transmitters/Transducers:

1. Static-Pressure Transmitter: Nondirectional sensor with suitable range for expected input, and temperature compensated.

    a. Accuracy: 2 percent of full scale with repeatability of 0.5 percent.
    b. Output: 4 to 20 mA.
    c. Duct Static-Pressure Range: 0- to 5-inch wg.

2.5 PNEUMATIC SENSORS

A. Digital-to-Pneumatic Transducers: Convert plus or minus 12-V dc pulse-width-modulation outputs, or continuous proportional current or voltage to 0 to 20 psig (0 to 140 kPa).

1. Available Manufacturers:

    a. BEC Controls Corporation.
    b. MAMAC Systems, Inc.

2.6 THERMOSTATS

A. Line-Voltage, On-Off Thermostats: Bimetal-actuated, open contact or bellows-actuated, enclosed, snap-switch or equivalent solid-state type, with heat anticipator; listed for electrical rating; with concealed set-point adjustment, 55 to 85 deg F set-point range, and 2 deg F maximum differential.

1. Electric Heating Thermostats: Equip with off position on dial wired to break ungrounded conductors.
2. Selector Switch: Integral, manual on-off-auto.

2.7 ACTUATORS

A. Manufacturers:

1. Belimo Aircontrols (USA), Inc.
2. Seimen's

B. Electronic Actuators: Direct-coupled type designed for minimum 60,000 full-stroke cycles at rated torque.

1. Valves: Size for torque required for valve close off at maximum pump differential pressure.
2. Dampers: Size for running torque calculated as follows:

    a. Parallel-Blade Damper with Edge Seals: 7 inch-lb/sq. ft. of damper.
    b. Opposed-Blade Damper with Edge Seals: 5 inch-lb/sq. ft. of damper.
    c. Parallel-Blade Damper without Edge Seals: 4 inch-lb/sq. ft of damper.
    d. Opposed-Blade Damper without Edge Seals: 3 inch-lb/sq. ft. of damper.
    e. Dampers with 2- to 3-Inch wg of Pressure Drop or Face Velocities of 1000 to 2500 fpm: Increase running torque by 1.5.
    f. Dampers with 3- to 4-Inch wg of Pressure Drop or Face Velocities of 2500 to 3000 fpm: Increase running torque by 2.0.

3. Coupling: V-bolt and V-shaped, toothed cradle.
4. Overload Protection: Electronic overload or digital rotation-sensing circuitry.
5. Fail-Safe Operation: Mechanical, spring-return mechanism. Provide external, manual gear release on nonspring-return actuators.
6. Power Requirements (Two-Position Spring Return): 24-V ac.
7. Power Requirements (Modulating): Maximum 10 VA at 24-V ac or 8 W at 24-V dc.
8. Proportional Signal: 2- to 10-V dc or 4 to 20 mA, and 2- to 10-V dc position feedback signal.
9. Temperature Rating: 40 to 104 deg F.
10. Temperature Rating (Smoke Dampers): Minus 22 to plus 250 deg F.
11. Run Time: 12 seconds open, 5 seconds closed.

2.8 CONTROL VALVES

A. Manufacturers:

1. Belimo Aircontrols.
2. Seimen's

B. Control Valves: Factory fabricated, of type, body material, and pressure class based on maximum pressure and temperature rating of piping system, unless otherwise indicated.

C. Hydronic system globe valves shall have the following characteristics:

1. NPS 2 and Smaller: Class 125 bronze body, bronze trim, rising stem, renewable composition disc, and screwed ends with backseating capacity repackable under pressure.
2. NPS 2-1/2 and Larger: Class 125 iron body, bronze trim, rising stem, plug-type disc, flanged ends, and renewable seat and disc.
3. Internal Construction: Replaceable plugs and stainless-steel or brass seats.

    a. Single-Seated Valves: Cage trim provides seating and guiding surfaces for plug on top and bottom.
    b. Double-Seated Valves: Balanced plug; cage trim provides seating and guiding surfaces for plugs on top and bottom.

4. Sizing: 3-psig maximum pressure drop at design flow rate or the following:

    a. Two Position: Line size.
    b. Two-Way Modulating: Either the value specified above or twice the load pressure drop, whichever is more.
    c. Three-Way Modulating: Twice the load pressure drop, but not more than value specified above.

5. Flow Characteristics: Two-way valves shall have equal percentage characteristics; three-way valves shall have linear characteristics.
6. Close-Off (Differential) Pressure Rating: Combination of actuator and trim shall provide minimum close-off pressure rating of 150 percent of total system (pump) head for two-way valves and 100 percent of pressure differential across valve or 100 percent of total system (pump) head.

D. Terminal Unit Control Valves: Bronze body, bronze trim, two or three ports as indicated, replaceable plugs and seats, and union and threaded ends.

1. Rating: Class 125 for service at 125 psig and 250 deg F operating conditions.
2. Sizing: 3-psig maximum pressure drop at design flow rate, to close against pump shutoff head.
3. Flow Characteristics: Two-way valves shall have equal percentage characteristics; three-way valves shall have linear characteristics.

2.9 DAMPERS

A. Manufacturers:

1. Air Balance Inc.
2. Don Park Inc.; Autodamp Div.

3. TAMCO (T. A. Morrison & Co. Inc.).
4. United Enertech Corp.
5. Vent Products Company, Inc.

B. Dampers: AMCA-rated, parallel or opposed-blade design; 0.108-inch- minimum thick, galvanized-steel or 0.125-inch- minimum thick, extruded-aluminum frames with holes for duct mounting; damper blades shall not be less than 0.064-inch- thick galvanized steel with maximum blade width of 8 inches and length of 48 inches.

1. Secure blades to 1/2-inch- diameter, zinc-plated axles using zinc-plated hardware, with nylon blade bearings, blade-linkage hardware of zinc-plated steel and brass, ends sealed against spring-stainless-steel blade bearings, and thrust bearings at each end of every blade.
2. Operating Temperature Range: From minus 40 to plus 200 deg F.
3. Edge Seals, Standard Pressure Applications: Closed-cell neoprene.
4. Edge Seals, Low-Leakage Applications: Use inflatable blade edging or replaceable rubber blade seals and spring-loaded stainless-steel side seals, rated for leakage at less than 10 cfm per sq. ft. of damper area, at differential pressure of 4-inch wg when damper is held by torque of 50 in. x lbf; when tested according to AMCA 500D.

2.10 AIR SUPPLY

A. Available Manufacturers:

1. Champion – Gardner Denver
2. Quincy Air Compressors

B. Control and Instrumentation Tubing: Copper tubing complying with ASTM B 88, Type K or ASTM B 280 Type ACR.

1. Fittings: Cast-bronze solder fittings complying with ASME B16.18; or wrought-copper solder fittings complying with ASME B16.22, except forged-brass compression-type fittings at connections to equipment.
2. Joining Method: Soldered or brazed.

C. Tank: ASME storage tank with drain test cock, automatic moisture removal trap, tank relief valve, and rubber-cork vibration isolation mounting pads.

D. Duplex Air Compressor: Capacity to supply compressed air to temperature control system.

1. Pressure control with adjustable electric contacts, set to start and stop both compressors at different pressures.
2. Electrical alternation set with motor starters and disconnect to operate compressors alternately or on time schedule.

E. Compressor Type: Reciprocating.

F. Size compressor and tank to operate compressor not more than 20 minutes during a 60-minute period.

G. Compressor Accessories: Low-resistance intake-air filter, and belt guards.

H. System Accessories: Air filter rated for 97 percent efficiency at rated airflow, and combination filter/pressure-reducing station or separate filter and pressure-reducing station.

I. Refrigerated Air Dryer: Self-contained, refrigerated air dryer complete with heat exchangers, moisture separator, internal wiring and piping, and with manual bypass valve.

1. Heat Exchangers: Air-to-refrigerant coils with centrifugal-type moisture separator and automatic trap assembly.
2. Refrigeration Unit: Hermetically sealed, operating to maintain dew point of 13 deg F at 20 psig, housed in steel cabinet with access door and panel.
3. Accessories: Air-inlet temperature gage, air-inlet pressure gage, on-off switch, high-temperature light, power-on light, refrigerant gage on back, air-outlet temperature gage, air-outlet pressure gage, and with contacts for remote indication of power status and high-temperature alarm.

J. Pressure Gages: Black letters on white background, 2-1/2 inches in diameter, flush or surface mounting, with front calibration screw to match sensor, and having a graduated scale in psig.

K. Gage Cocks: Tee or level handle, bronze, rated for 125 psig.

L. Combination Filter/Regulators: Zinc or aluminum castings with elastomeric diaphragm, balanced construction to automatically prevent pressure buildup, and producing flat reduced-pressure curve; with threaded pipe connections, quick-disconnect service devices, and aluminum or plastic bowl with metal guard and manual drain cock.

M. Pressure Relief Valves: ASME rated and labeled.

1. High Pressure: Size for installed capacity.

2.11 CONTROL CABLE

A. Electronic and fiber-optic cables for control wiring are specified in Division 16 Section "Voice and Data Communication Cabling."

PART 3 - EXECUTION

3.1 EXAMINATION

A. Verify that power supply is available to control units and operator workstation.

3.2 INSTALLATION

A. Install software in control units and operator workstation(s). Implement all features of programs to specified requirements and as appropriate to sequence of operation.

B. Connect and configure equipment and software to achieve sequence of operation specified.

C. Verify location of thermostats, humidistats, and other exposed control sensors with Drawings and room details before installation. Install devices 60 inches above the floor.

1. Install averaging elements in ducts and plenums in crossing or zigzag pattern.

D. Install automatic dampers according to Division 15 Section "Duct Accessories."

E. Install damper motors on outside of duct in warm areas, not in locations exposed to outdoor temperatures.

F. Install labels and nameplates to identify control components according to Division 15 Section "Mechanical Identification."

G. Install hydronic instrument wells, valves, and other accessories according to Division 15 Section "Hydronic Piping."

H. Install refrigerant instrument wells, valves, and other accessories according to Division 15 Section "Refrigerant Piping."

I. Install duct volume-control dampers according to Division 15 Sections specifying air ducts.

J. Install electronic and fiber-optic cables according to Division 16 Section "Voice and Data Communication Cabling."

K. Mount compressor and tank unit on elastomeric mounts. Vibration isolators are specified in Division 15 Section "Mechanical Vibration and Seismic Controls." Isolate air supply with wire-braid-reinforced rubber hose. Secure and anchor according to manufacturer's written instructions and seismic-control requirements.

1. Pipe manual and automatic drains to nearest floor drain.
2. Supply instrument air from compressor units through filter, pressure-reducing valve, and pressure relief valve, with pressure gages and shutoff and bypass valves.

3.3 FIELD QUALITY CONTROL

A. Manufacturer's Field Service: Engage a factory-authorized service representative to inspect, test, and adjust field-assembled components and equipment installation, including connections, and to assist in field testing. Report results in writing.

B. Perform the following field tests and inspections and prepare test reports:

1. Operational Test: After electrical circuitry has been energized, start units to confirm proper unit operation. Remove and replace malfunctioning units and retest.
2. Test and adjust controls and safeties.
3. Test calibration of electronic controllers by disconnecting input sensors and stimulating operation with compatible signal generator.
4. Test each point through its full operating range to verify that safety and operating control set points are as required.
5. Test each control loop to verify stable mode of operation and compliance with sequence of operation. Adjust PID actions.

6. Test each system for compliance with sequence of operation.
7. Test software and hardware interlocks.

C. DDC Verification:

1. Verify that instruments are installed before calibration, testing, and loop or leak checks.
2. Check instruments for proper location and accessibility.
3. Check instrument installation for direction of flow, elevation, orientation, insertion depth, and other applicable considerations.
4. Check pressure instruments, piping slope, installation of valve manifold, and self-contained pressure regulators.
5. Check temperature instruments and material and length of sensing elements.
6. Check control valves. Verify that they are in correct direction.
7. Check DDC system as follows:

    a. Verify that DDC controller power supply is from emergency power supply, if applicable.
    b. Verify that wires at control panels are tagged with their service designation and approved tagging system.
    c. Verify that spare I/O capacity has been provided.
    d. Verify that DDC controllers are protected from power supply surges.

D. Replace damaged or malfunctioning controls and equipment and repeat testing procedures.

3.4 ADJUSTING

A. Calibrating and Adjusting:

1. Calibrate instruments.
2. Make three-point calibration test for both linearity and accuracy for each analog instrument.
3. Calibrate equipment and procedures using manufacturer's written recommendations and instruction manuals. Use test equipment with accuracy at least double that of instrument being calibrated.
4. Control System Inputs and Outputs:

    a. Check analog inputs at 0, 50, and 100 percent of span.
    b. Check analog outputs using milliampere meter at 0, 50, and 100 percent output.
    c. Check digital inputs using jumper wire.
    d. Check digital outputs using ohmmeter to test for contact making or breaking.
    e. Check resistance temperature inputs at 0, 50, and 100 percent of span using a precision-resistant source.

5. Pressure:

    a. Calibrate pressure transmitters at 0, 50, and 100 percent of span.
    b. Calibrate pressure switches to make or break contacts, with adjustable differential set at minimum.

6. Temperature:

   a. Calibrate resistance temperature transmitters at 0, 50, and 100 percent of span using a precision-resistance source.
   b. Calibrate temperature switches to make or break contacts.

7. Stroke and adjust control valves and dampers without positioners, following the manufacturer's recommended procedure, so that valve or damper is 100 percent open and closed.
8. Stroke and adjust control valves and dampers with positioners, following manufacturer's recommended procedure, so that valve and damper is 0, 50, and 100 percent closed.
9. Provide diagnostic and test instruments for calibration and adjustment of system.
10. Provide written description of procedures and equipment for calibrating each type of instrument. Submit procedures review and approval before initiating startup procedures.

B. Adjust initial temperature and humidity set points.

C. Occupancy Adjustments: When requested within 12 months of date of Substantial Completion, provide on-site assistance in adjusting system to suit actual occupied conditions. Provide up to three visits to Project during other than normal occupancy hours for this purpose.

3.5 PNEUMATIC PIPING INSTALLATION

A. Install piping in mechanical equipment rooms parallel to walls with supports on walls and/or from ceiling. Provide shut-off valve between receiver tank outlet and distribution piping.

B. Mount air dryer on wall near air compressor. Do not mount on air compressor.

C. Route receiver and air dryer water drains to nearest floor drain. Do not run piping on floor in egress aisles.

3.6 DEMONSTRATION

A. Engage a factory-authorized service representative to train Owner's maintenance personnel to adjust, operate, and maintain HVAC instrumentation and controls. Refer to Division 1 Section "Demonstration and Training."

END OF SECTION 15900

SECTION 15940
SEQUENCE OF OPERATION

PART 1 - GENERAL

1.1 RELATED DOCUMENTS

A. Drawings and general provisions of the Contract, including General and Supplementary Conditions and Division 1 Specification Sections, apply to this Section.

1.2 SUMMARY

A. This Section includes control sequences for HVAC systems, subsystems, and equipment.

B. Related Sections include the following:

1. Division 15 Section "HVAC Instrumentation and Controls" for control equipment and devices and for submittal requirements.

1.3 DEFINITIONS

A. DDC: Direct digital control.

B. VAV: Variable air volume.

1.4 AIR-HANDLING-UNIT AND ROOF TOP UNIT CONTROL SEQUENCES

A. Start and Stop Supply Fan(s):

1. Enable: Freeze Protection:

a. Input Device: Duct-mounted averaging element thermostat, located before supply fan.
b. Output Device: Hard wired through motor starter; DDC system alarm.
c. Action: Allow start if duct temperature is above 37 deg F; signal alarm if fan fails to start as commanded.

2. Enable: Smoke Control:

a. Input Device: Duct-mounted smoke detectors, located in supply or supply and return air.

b. Output Device: Hard wired through motor starter; DDC system alarm.
c. Action: Allow start if duct is free of products of combustion.

B. Supply Fan(s) Variable-Volume Control:

1. Occupied Time Schedule:

a. Input Device: DDC system time schedule.
b. Output Device: Binary output.
c. Action: Enable control.

2. Volume Control:

a. Input Device: Static-pressure transmitter sensing supply-duct static pressure referenced to conditioned-space static pressure.
b. Output Device: DDC system analog output to motor speed controller. Set variable-speed drive to minimum speed when fan is stopped.
c. Action: Maintain constant supply-duct static pressure.

3. High Pressure:

a. Input Device: Static-pressure transmitter sensing supply-duct static pressure referenced to static pressure outside the duct.
b. Output Device: DDC system binary output to alarm panel.
c. Action: Stop fan and signal alarm when static pressure rises above excessive-static-pressure set point.

C. Mixed-Air Control:

1. Occupied Time Schedule:

a. Input Device: DDC system time schedule.
b. Output Device: DDC system output.
c. Action: Enable control.

2. Minimum Position:

a. Input Device: DDC system time schedule.
b. Output Device: DDC system analog output to modulating damper actuator(s).
c. Action: Open outdoor-air dampers to minimum position.

3. Heating Reset:

a. Input Device: DDC system software.
b. Output Device: DDC system analog output to modulating damper actuator(s).
c. Action: Set outdoor-air dampers to minimum position.

4. Supply-Air Temperature:

a. Input Device: DDC Enthalpy Control Program.
b. Output Device: DDC system analog output to modulating outdoor air, return air and relief air damper actuators.

c. Action: Modulate outdoor-, return-, and relief-air dampers to maintain air temperature set point of 55 deg F.

5. Unoccupied Time Schedule:

a. Input Device: DDC system time schedule.
b. Output Device: DDC system analog output to modulating damper actuator(s).
c. Action: Position outdoor- and relief-air dampers closed and return-air dampers open.

D. Filters: During occupied periods, when fan is running, differential air-pressure transmitters exist.

1. Occupied Time Schedule:

a. Input Device: DDC system time schedule.
b. Output Device: DDC system output.
c. Action: Enable control.

2. Differential Pressure:

a. Input Device: Pressure transmitter.
b. Output Device: DDC system alarm.
c. Action: Signal alarm on high-pressure conditions.

E. Hydronic Heating Coil:

1. Occupied Time Schedule:

a. Input Device: DDC system time schedule.
b. Output Device: Binary output.
c. Action: Enable control.

2. Supply-Air Temperature:

a. Input Device: Electronic temperature sensor.
b. Output Device: Normally open modulating control valve.
c. Action: Reset supply-air temperature in response to greatest cooling demand.

3. Unoccupied Time Schedule:

a. Input Device: DDC system time schedule and output.
b. Output Device: DDC system binary output.
c. Action: Return valve to normal position when fan is cycled on.

F. Evaporative Cooling Coil:

1. Occupied Time Schedule:

a. Input Device: DDC System time schedule.
b. Output Device: Binary output.
c. Action: Enable control.

2. Supply-Air Temperature:

   a. Input Device: Electronic temperature sensor.
   b. Output Device: Binary output.
   c. Action: Energize mechanical cooling if mixed air temperature is above 70 deg. F. and a space sensor is calling for cooling.

3. Unoccupied Time Schedule:

   a. Input Device: DDC system time schedule and output.
   b. Output Device: DDC system binary output.
   c. Action: Enable mechanical cooling when fan is cycled on.

4. Display:

   a. Fan discharge air-temperature indication
   b. Mixed air air-temperature setpoint.
   c. Mechanical cooling on/off indication.

G. Coordination of Air-Handling Unit Sequences: Ensure that preheat, mixed-air, heating-coil, and cooling-coil controls have common inputs and do not overlap in function.

H. Operator Station Display: Indicate the following on operator workstation display terminal:

1. DDC system graphic.
2. DDC system on-off indication.
3. DDC system occupied/unoccupied mode.
4. Outdoor-air-temperature indication.
5. Supply-fan on-off indication.
6. Supply-fan-discharge static-pressure indication.
7. Supply-fan-discharge static pressure set point.
8. Supply-fan speed.
9. Building static-pressure indication.
10. Building static-pressure set point.
11. Mixed-air-temperature indication.
12. Mixed-air-temperature set point.
13. Mixed-air damper position.
14. Filter air-pressure-drop indication.
15. Filter high-air-pressure set point.
16. Supply air-temperature indication.
17. Supply air-temperature set point.
18. Heating-coil pump operation indication.
19. Heating-coil control-valve position.

1.5 TERMINAL UNIT OPERATING SEQUENCE

A. Unit Heater, Hydronic: Room thermostat cycles fan:

1. Pipe-mounted thermostat stops fan when return heating-water space temperature falls below set point.

B. Unit Ventilator: Unit mounted thermostat modulates heating control valves and cycles mechanical cooling; airstream thermostats modulate outdoor- and return-air dampers as follows:

1. Occupied Time Schedule:

   a. Input Device: Occupancy sensor.
   b. Output Device: Binary output.
   c. Action: Start and stop fan, move outdoor- and return-air dampers to minimum outdoor-air position, and enable control.

2. Room Temperature – Heating Valve and Mechanical Cooling:

   a. Input Device: Electronic temperature sensor.
   b. Output Device: Electronic control-valve operators.
   c. Action: Modulate heating-water supply control valve and cycle on and off mechanical cooling sequence to maintain temperature.

3. Room Temperature - Dampers:

   a. Input Device: Electronic temperature sensor in mixed air.
   b. Output Device: Electronic control damper actuators.
   c. Action: Modulate outdoor- and return-air dampers to maintain temperature.

4. Supply-Air Temperature Limit:

   a. Input Device: Electronic temperature sensor in discharge air.
   b. Output Device: Electronic control-valve operator and control damper actuators.
   c. Action: Override room thermostat to control valve and dampers to prevent discharge air from dropping below a minimum set point.

5. Warm-up Cycle:

   a. Input Device: DDC system time schedule.
   b. Output Device: DDC system binary output.
   c. Action: Open heating-water supply control valve, close outdoor-air damper, and open return-air damper.

6. Display:

   a. DDC system graphic.
   b. DDC system on-off indication.
   c. DDC system occupied/unoccupied mode.
   d. Room temperature indication.
   e. Room temperature set point.
   f. Control-valve position.
   g. Damper position.
   h. Mechanical cooling on-off indication.

1.6 VENTILATION SEQUENCES

A. Relief Hood: Relief air damper modulates with air handlers mixed-air damper position.

B. Exhaust Fan: Cycle fan on when in occupied periods and cycle fan off when in unoccupied periods.

1. Operator Workstation: Display the following data:

a. Start/Stop
b. Status from current sensor.
c. Flow failure alarm.

PART 2 - PRODUCTS (Not Applicable)

PART 3 - EXECUTION (Not Applicable)

END OF SECTION 15940

Kingscott Associates, Inc.
Architects/Engineers
Kalamazoo, Michigan

SECTION 15950
TESTING, ADJUSTING, AND BALANCING

PART 1 - GENERAL

1.1 RELATED DOCUMENTS

A. Drawings and general provisions of the Contract, including General and Supplementary Conditions and Division 1 Specification Sections, apply to this Section.

1.2 SUMMARY

A. This Section includes TAB to produce design objectives for the following:

1. Air Systems:

    a. Constant-volume air systems.
    b. Variable-air-volume systems.

2. Hydronic Piping Systems:

    a. Constant-flow systems.

3. HVAC equipment quantitative-performance settings.
4. Verifying that automatic control devices are functioning properly.

1.3 DEFINITIONS

A. Adjust: To regulate fluid flow rate and air patterns at the terminal equipment, such as to reduce fan speed or adjust a damper.

B. Balance: To proportion flows within the distribution system, including submains, branches, and terminals, according to indicated quantities.

C. Draft: A current of air, when referring to localized effect caused by one or more factors of high air velocity, low ambient temperature, or direction of airflow, whereby more heat is withdrawn from a person's skin than is normally dissipated.

D. Procedure: An approach to and execution of a sequence of work operations to yield repeatable results.

E. Report Forms: Test data sheets for recording test data in logical order.

F. Static Head: The pressure due to the weight of the fluid above the point of measurement. In a closed system, static head is equal on both sides of the pump.

G. Suction Head: The height of fluid surface above the centerline of the pump on the suction side.

H. TAB: Testing, adjusting, and balancing.

I. Terminal: A point where the controlled medium, such as fluid or energy, enters or leaves the distribution system.

J. Test: A procedure to determine quantitative performance of systems or equipment.

K. Testing, Adjusting, and Balancing (TAB) Firm: The entity responsible for performing and reporting TAB procedures.

1.4 SUBMITTALS

A. Qualification Data: Within 30 days from Contractor's Notice to Proceed, submit 4 copies of evidence that TAB firm and this Project's TAB team members meet the qualifications specified in "Quality Assurance" Article.

B. Contract Documents Examination Report: Within 30 days from Contractor's Notice to Proceed, submit 4 copies of the Contract Documents review report as specified in Part 3.

C. Strategies and Procedures Plan: Within 60 days from Contractor's Notice to Proceed, submit 4 copies of TAB strategies and step-by-step procedures as specified in Part 3 "Preparation" Article. Include a complete set of report forms intended for use on this Project.

D. Certified TAB Reports: Submit two copies of reports prepared, as specified in this Section, on approved forms certified by TAB firm.

E. Sample Report Forms: Submit two sets of sample TAB report forms.

1.5 QUALITY ASSURANCE

A. TAB Firm Qualifications: Engage a TAB firm certified by either AABC or NEBB.

B. TAB Conference: Meet with Owner's and Architect's representatives on approval of TAB strategies and procedures plan to develop a mutual understanding of the details. Ensure the participation of TAB team members, equipment manufacturers' authorized service representatives, HVAC controls installers, and other support personnel. Provide seven days' advance notice of scheduled meeting time and location.

1. Agenda Items: Include at least the following:

    a. Submittal distribution requirements.
    b. The Contract Documents examination report.
    c. TAB plan.
    d. Work schedule and Project-site access requirements.
    e. Coordination and cooperation of trades and subcontractors.

f. Coordination of documentation and communication flow.

C. Certification of TAB Reports: Certify TAB field data reports. This certification includes the following:

1. Review field data reports to validate accuracy of data and to prepare certified TAB reports.
2. Certify that TAB team complied with approved TAB plan and the procedures specified and referenced in this Specification.

D. TAB Report Forms: Use standard forms from SMACNA's "HVAC Systems - Testing, Adjusting, and Balancing." TAB firm's forms approved by Architect.

E. Instrumentation Type, Quantity, and Accuracy: As described in NEBB's "Procedural Standards for Testing, Adjusting, and Balancing of Environmental Systems," Section II, "Required Instrumentation for NEBB Certification."

F. Instrumentation Calibration: Calibrate instruments at least every six months or more frequently if required by instrument manufacturer.

1. Keep an updated record of instrument calibration that indicates date of calibration and the name of party performing instrument calibration.

1.6 PROJECT CONDITIONS

A. Partial Owner Occupancy: Owner may occupy completed areas of building before Substantial Completion. Cooperate with Owner during TAB operations to minimize conflicts with Owner's operations.

1.7 COORDINATION

A. Coordinate the efforts of factory-authorized service representatives for systems and equipment, HVAC controls installers, and other mechanics to operate HVAC systems and equipment to support and assist TAB activities.

B. Notice: Provide seven days' advance notice for each test. Include scheduled test dates and times.

C. Perform TAB after leakage and pressure tests on air and water distribution systems have been satisfactorily completed.

PART 2 - PRODUCTS (Not Applicable)

PART 3 - EXECUTION

3.1 EXAMINATION

A. Examine the Contract Documents to become familiar with Project requirements and to discover conditions in systems' designs that may preclude proper TAB of systems and equipment.

1. Contract Documents are defined in the General and Supplementary Conditions of Contract.
2. Verify that balancing devices, such as test ports, gage cocks, thermometer wells, flow-control devices, balancing valves and fittings, and manual volume dampers, are required by the Contract Documents. Verify that quantities and locations of these balancing devices are accessible and appropriate for effective balancing and for efficient system and equipment operation.

B. Examine approved submittal data of HVAC systems and equipment.

C. Examine Project Record Documents described in Division 1 Section "Project Record Documents."

D. Examine design data, including HVAC system descriptions, statements of design assumptions for environmental conditions and systems' output, and statements of philosophies and assumptions about HVAC system and equipment controls.

E. Examine equipment performance data including fan and pump curves. Relate performance data to Project conditions and requirements, including system effects that can create undesired or unpredicted conditions that cause reduced capacities in all or part of a system. Calculate system effect factors to reduce performance ratings of HVAC equipment when installed under conditions different from those presented when the equipment was performance tested at the factory. To calculate system effects for air systems, use tables and charts found in AMCA 201, "Fans and Systems," Sections 7 through 10; or in SMACNA's "HVAC Systems--Duct Design," Sections 5 and 6. Compare this data with the design data and installed conditions.

F. Examine system and equipment installations to verify that they are complete and that testing, cleaning, adjusting, and commissioning specified in individual Sections have been performed.

G. Examine system and equipment test reports.

H. Examine HVAC system and equipment installations to verify that indicated balancing devices, such as test ports, gage cocks, thermometer wells, flow-control devices, balancing valves and fittings, and manual volume dampers, are properly installed, and that their locations are accessible and appropriate for effective balancing and for efficient system and equipment operation.

I. Examine systems for functional deficiencies that cannot be corrected by adjusting and balancing.

J. Examine HVAC equipment to ensure that clean filters have been installed, bearings are greased, belts are aligned and tight, and equipment with functioning controls is ready for operation.

K. Examine terminal units, such as variable-air-volume boxes, to verify that they are accessible and their controls are connected and functioning.

L. Examine strainers for clean screens and proper perforations.

M. Examine three-way valves for proper installation for their intended function of diverting or mixing fluid flows.

N. Examine heat-transfer coils for correct piping connections and for clean and straight fins.

O. Examine system pumps to ensure absence of entrained air in the suction piping.

P. Examine equipment for installation and for properly operating safety interlocks and controls.

Q. Examine automatic temperature system components to verify the following:

1. Dampers, valves, and other controlled devices are operated by the intended controller.
2. Dampers and valves are in the position indicated by the controller.
3. Integrity of valves and dampers for free and full operation and for tightness of fully closed and fully open positions. This includes dampers in multizone units, mixing boxes, and variable-air-volume terminals.
4. Automatic modulating and shutoff valves, including two-way valves and three-way mixing and diverting valves, are properly connected.
5. Thermostats and humidistats are located to avoid adverse effects of sunlight, drafts, and cold walls.
6. Sensors are located to sense only the intended conditions.
7. Sequence of operation for control modes is according to the Contract Documents.
8. Controller set points are set at indicated values.
9. Interlocked systems are operating.
10. Changeover from heating to cooling mode occurs according to indicated values.

R. Report deficiencies discovered before and during performance of TAB procedures. Observe and record system reactions to changes in conditions. Record default set points if different from indicated values.

3.2 PREPARATION

A. Prepare a TAB plan that includes strategies and step-by-step procedures.

B. Complete system readiness checks and prepare system readiness reports. Verify the following:

1. Permanent electrical power wiring is complete.
2. Hydronic systems are filled, clean, and free of air.
3. Automatic temperature-control systems are operational.
4. Equipment and duct access doors are securely closed.
5. Balance, smoke, and fire dampers are open.
6. Isolating and balancing valves are open and control valves are operational.

7. Ceilings are installed in critical areas where air-pattern adjustments are required and access to balancing devices is provided.
8. Windows and doors can be closed so indicated conditions for system operations can be met.

3.3 GENERAL PROCEDURES FOR TESTING AND BALANCING

A. Perform testing and balancing procedures on each system according to the procedures contained in SMACNA's "HVAC Systems - Testing, Adjusting, and Balancing" and this Section.

B. Cut insulation, ducts, pipes, and equipment cabinets for installation of test probes to the minimum extent necessary to allow adequate performance of procedures. After testing and balancing, close probe holes and patch insulation with new materials identical to those removed. Restore vapor barrier and finish according to insulation Specifications for this Project.

C. Mark equipment and balancing device settings with paint or other suitable, permanent identification material, including damper-control positions, valve position indicators, fan-speed-control levers, and similar controls and devices, to show final settings.

D. Take and report testing and balancing measurements in inch-pound (IP) units.

3.4 GENERAL PROCEDURES FOR BALANCING AIR SYSTEMS

A. Prepare test reports for both fans and outlets. Obtain manufacturer's outlet factors and recommended testing procedures. Crosscheck the summation of required outlet volumes with required fan volumes.

B. Prepare schematic diagrams of systems' "as-built" duct layouts.

C. For variable-air-volume systems, develop a plan to simulate diversity.

D. Determine the best locations in main and branch ducts for accurate duct airflow measurements.

E. Check airflow patterns from the outside-air louvers and dampers and the return- and exhaust-air dampers, through the supply-fan discharge and mixing dampers.

F. Locate start-stop and disconnect switches, electrical interlocks, and motor starters.

G. Verify that motor starters are equipped with properly sized thermal protection.

H. Check dampers for proper position to achieve desired airflow path.

I. Check for airflow blockages.

J. Check condensate drains for proper connections and functioning.

K. Check for proper sealing of air-handling unit components.

L. Check for proper sealing of air duct system.

3.5 PROCEDURES FOR CONSTANT-VOLUME AIR SYSTEMS

A. Adjust fans to deliver total indicated airflows within the maximum allowable fan speed listed by fan manufacturer.

1. Measure fan static pressures to determine actual static pressure as follows:

    a. Measure outlet static pressure as far downstream from the fan as practicable and upstream from restrictions in ducts such as elbows and transitions.
    b. Measure static pressure directly at the fan outlet or through the flexible connection.
    c. Measure inlet static pressure of single-inlet fans in the inlet duct as near the fan as possible, upstream from flexible connection and downstream from duct restrictions.
    d. Measure inlet static pressure of double-inlet fans through the wall of the plenum that houses the fan.

2. Measure static pressure across each component that makes up an air-handling unit, rooftop unit, and other air-handling and -treating equipment.

    a. Simulate dirty filter operation and record the point at which maintenance personnel must change filters.

3. Measure static pressures entering and leaving other devices such as sound traps, heat recovery equipment, and air washers, under final balanced conditions.
4. Compare design data with installed conditions to determine variations in design static pressures versus actual static pressures. Compare actual system effect factors with calculated system effect factors to identify where variations occur. Recommend corrective action to align design and actual conditions.
5. Obtain approval from Architect for adjustment of fan speed higher or lower than indicated speed. Make required adjustments to pulley sizes, motor sizes, and electrical connections to accommodate fan-speed changes.
6. Do not make fan-speed adjustments that result in motor overload. Consult equipment manufacturers about fan-speed safety factors. Modulate dampers and measure fan-motor amperage to ensure that no overload will occur. Measure amperage in full cooling, full heating, economizer, and any other operating modes to determine the maximum required brake horsepower.

B. Adjust volume dampers for main duct, submain ducts, and major branch ducts to indicated airflows within specified tolerances.

1. Measure static pressure at a point downstream from the balancing damper and adjust volume dampers until the proper static pressure is achieved.

    a. Where sufficient space in submain and branch ducts is unavailable for Pitot-tube traverse measurements, measure airflow at terminal outlets and inlets and calculate the total airflow for that zone.

2. Remeasure each submain and branch duct after all have been adjusted. Continue to adjust submain and branch ducts to indicated airflows within specified tolerances.

C. Measure terminal outlets and inlets without making adjustments.

1. Measure terminal outlets using a direct-reading hood or outlet manufacturer's written instructions and calculating factors.

D. Adjust terminal outlets and inlets for each space to indicated airflows within specified tolerances of indicated values. Make adjustments using volume dampers rather than extractors and the dampers at air terminals.

1. Adjust each outlet in same room or space to within specified tolerances of indicated quantities without generating noise levels above the limitations prescribed by the Contract Documents.
2. Adjust patterns of adjustable outlets for proper distribution without drafts.

3.6 PROCEDURES FOR VARIABLE-AIR-VOLUME SYSTEMS

A. Compensating for Diversity: When the total airflow of all terminal units is more than the indicated airflow of the fan, place a selected number of terminal units at a maximum set-point airflow condition until the total airflow of the terminal units equals the indicated airflow of the fan. Select the reduced airflow terminal units so they are distributed evenly among the branch ducts.

B. Pressure-Independent, Variable-Air-Volume Systems: After the fan systems have been adjusted, adjust the variable-air-volume systems as follows:

1. Set outside-air dampers at minimum, and return- and exhaust-air dampers at a position that simulates full-cooling load.
2. Select the terminal unit that is most critical to the supply-fan airflow and static pressure. Measure static pressure. Adjust system static pressure so the entering static pressure for the critical terminal unit is not less than the sum of terminal-unit manufacturer's recommended minimum inlet static pressure plus the static pressure needed to overcome terminal-unit discharge system losses.
3. Measure total system airflow. Adjust to within indicated airflow.
4. Set terminal units at maximum airflow and adjust controller or regulator to deliver the designed maximum airflow. Use terminal-unit manufacturer's written instructions to make this adjustment. When total airflow is correct, balance the air outlets downstream from terminal units as described for constant-volume air systems.
5. Set terminal units at minimum airflow and adjust controller or regulator to deliver the designed minimum airflow. Check air outlets for a proportional reduction in airflow as described for constant-volume air systems.

    a. If air outlets are out of balance at minimum airflow, report the condition but leave outlets balanced for maximum airflow.

6. Remeasure the return airflow to the fan while operating at maximum return airflow and minimum outside airflow. Adjust the fan and balance the return-air ducts and inlets as described for constant-volume air systems.
7. Measure static pressure at the most critical terminal unit and adjust the static-pressure controller at the main supply-air sensing station to ensure that adequate static pressure is maintained at the most critical unit.
8. Record the final fan performance data.

3.7 GENERAL PROCEDURES FOR HYDRONIC SYSTEMS

A. Prepare test reports with pertinent design data and number in sequence starting at pump to end of system. Check the sum of branch-circuit flows against approved pump flow rate. Correct variations that exceed plus or minus 5 percent.

B. Prepare schematic diagrams of systems' "as-built" piping layouts.

C. Prepare hydronic systems for testing and balancing according to the following, in addition to the general preparation procedures specified above:

1. Open all manual valves for maximum flow.
2. Check flow-control valves for specified sequence of operation and set at indicated flow.
3. Check pump-motor load. If motor is overloaded, throttle main flow-balancing device so motor nameplate rating is not exceeded.
4. Check air vents for a forceful liquid flow exiting from vents when manually operated.

3.8 PROCEDURES FOR HYDRONIC SYSTEMS

A. Measure water flow at pumps. Use the following procedures, except for positive-displacement pumps:

1. Verify impeller size by operating the pump with the discharge valve closed. Read pressure differential across the pump. Convert pressure to head and correct for differences in gage heights. Note the point on manufacturer's pump curve at zero flow and verify that the pump has the intended impeller size.
2. Check system resistance. With all valves open, read pressure differential across the pump and mark pump manufacturer's head-capacity curve. Adjust pump discharge valve until indicated water flow is achieved.
3. Verify pump-motor brake horsepower. Calculate the intended brake horsepower for the system based on pump manufacturer's performance data. Compare calculated brake horsepower with nameplate data on the pump motor. Report conditions where actual amperage exceeds motor nameplate amperage.
4. Report flow rates that are not within plus or minus 5 percent of design.

B. Set calibrated balancing valves, if installed, at calculated presettings.

C. Measure flow at all stations and adjust, where necessary, to obtain first balance.

1. System components that have Cv rating or an accurately cataloged flow-pressure-drop relationship may be used as a flow-indicating device.

D. Measure flow at main balancing station and set main balancing device to achieve flow that is 5 percent greater than indicated flow.

E. Adjust balancing stations to within specified tolerances of indicated flow rate as follows:

1. Determine the balancing station with the highest percentage over indicated flow.

2. Adjust each station in turn, beginning with the station with the highest percentage over indicated flow and proceeding to the station with the lowest percentage over indicated flow.
3. Record settings and mark balancing devices.

F. Measure pump flow rate and make final measurements of pump amperage, voltage, rpm, pump heads, and systems' pressures and temperatures including outdoor-air temperature.

3.9 PROCEDURES FOR MOTORS

A. Motors, 1/2 HP and Larger: Test at final balanced conditions and record the following data:

1. Manufacturer, model, and serial numbers.
2. Motor horsepower rating.
3. Motor rpm.
4. Efficiency rating.
5. Nameplate and measured voltage, each phase.
6. Nameplate and measured amperage, each phase.
7. Starter thermal-protection-element rating.

B. Motors Driven by Variable-Frequency Controllers: Test for proper operation at speeds varying from minimum to maximum. Test the manual bypass for the controller to prove proper operation. Record observations, including controller manufacturer, model and serial numbers, and nameplate data.

3.10 PROCEDURES FOR HEAT-TRANSFER COILS

A. Water Coils: Measure the following data for each coil:

1. Entering- and leaving-water temperature.
2. Water flow rate.
3. Water pressure drop.
4. Dry-bulb temperature of entering and leaving air.
5. Wet-bulb temperature of entering and leaving air for cooling coils.
6. Airflow.
7. Air pressure drop.

3.11 PROCEDURES FOR TEMPERATURE MEASUREMENTS

A. During TAB, report the need for adjustment in temperature regulation within the automatic temperature-control system.

B. Measure indoor wet- and dry-bulb temperatures every other hour for a period of two successive eight-hour days, in each separately controlled zone, to prove correctness of final temperature settings. Measure when the building or zone is occupied.

C. Measure outside-air, wet- and dry-bulb temperatures.

3.12 TEMPERATURE-CONTROL VERIFICATION

A. Verify that controllers are calibrated and commissioned.

B. Check transmitter and controller locations and note conditions that would adversely affect control functions.

C. Record controller settings and note variances between set points and actual measurements.

D. Check the operation of limiting controllers (i.e., high- and low-temperature controllers).

E. Check free travel and proper operation of control devices such as damper and valve operators.

F. Check the sequence of operation of control devices. Note air pressures and device positions and correlate with airflow and water flow measurements. Note the speed of response to input changes.

G. Check the interaction of electrically operated switch transducers.

H. Check the interaction of interlock and lockout systems.

I. Check main control supply-air pressure and observe compressor and dryer operations.

J. Record voltages of power supply and controller output. Determine whether the system operates on a grounded or nongrounded power supply.

K. Note operation of electric actuators using spring return for proper fail-safe operations.

3.13 TOLERANCES

A. Set HVAC system airflow and water flow rates within the following tolerances:

1. Supply, Return, and Exhaust Fans and Equipment with Fans: Plus 5 to plus 10 percent.
2. Air Outlets and Inlets: 0 to minus 10 percent.
3. Heating-Water Flow Rate: 0 to minus 10 percent.
4. Cooling-Water Flow Rate: 0 to minus 5 percent.

3.14 REPORTING

A. Initial Construction-Phase Report: Based on examination of the Contract Documents as specified in "Examination" Article, prepare a report on the adequacy of design for systems' balancing devices. Recommend changes and additions to systems' balancing devices to facilitate proper performance measuring and balancing. Recommend changes and additions to HVAC systems and general construction to allow access for performance measuring and balancing devices.

B. Status Reports: As Work progresses, prepare reports to describe completed procedures, procedures in progress, and scheduled procedures. Include a list of deficiencies and problems found in systems being tested and balanced. Prepare a separate report for each system and each building floor for systems serving multiple floors.

3.15 FINAL REPORT

A. General: Typewritten, or computer printout in letter-quality font, on standard bond paper, in three-ring binder, tabulated and divided into sections by tested and balanced systems.

B. Include a certification sheet in front of binder signed and sealed by the certified testing and balancing engineer.

1. Include a list of instruments used for procedures, along with proof of calibration.

C. Final Report Contents: In addition to certified field report data, include the following:

1. Pump curves.
2. Fan curves.
3. Manufacturers' test data.
4. Field test reports prepared by system and equipment installers.
5. Other information relative to equipment performance, but do not include Shop Drawings and Product Data.

D. General Report Data: In addition to form titles and entries, include the following data in the final report, as applicable:

1. Title page.
2. Name and address of TAB firm.
3. Project name.
4. Project location.
5. Architect's name and address.
6. Engineer's name and address.
7. Contractor's name and address.
8. Report date.
9. Signature of TAB firm who certifies the report.
10. Table of Contents with the total number of pages defined for each section of the report. Number each page in the report.
11. Summary of contents including the following:

    a. Indicated versus final performance.
    b. Notable characteristics of systems.
    c. Description of system operation sequence if it varies from the Contract Documents.

12. Nomenclature sheets for each item of equipment.
13. Data for terminal units, including manufacturer, type size, and fittings.
14. Notes to explain why certain final data in the body of reports varies from indicated values.
15. Test conditions for fans and pump performance forms including the following:

    a. Settings for outside-, return-, and exhaust-air dampers.
    b. Conditions of filters.
    c. Cooling coil, wet- and dry-bulb conditions.
    d. Face and bypass damper settings at coils.
    e. Fan drive settings including settings and percentage of maximum pitch diameter.

f. Inlet vane settings for variable-air-volume systems.
g. Settings for supply-air, static-pressure controller.
h. Other system operating conditions that affect performance.

E. System Diagrams: Include schematic layouts of air and hydronic distribution systems. Present each system with single-line diagram and include the following:

1. Quantities of outside, supply, return, and exhaust airflows.
2. Water and steam flow rates.
3. Duct, outlet, and inlet sizes.
4. Pipe and valve sizes and locations.
5. Terminal units.
6. Balancing stations.
7. Position of balancing devices.

F. Air-Handling Unit Test Reports: For air-handling units with coils, include the following:

1. Unit Data: Include the following:

a. Unit identification.
b. Location.
c. Make and type.
d. Model number and unit size.
e. Manufacturer's serial number.
f. Unit arrangement and class.
g. Discharge arrangement.
h. Sheave make, size in inches, and bore.
i. Sheave dimensions, center-to-center, and amount of adjustments in inches.
j. Number of belts, make, and size.
k. Number of filters, type, and size.

2. Motor Data:

a. Make and frame type and size.
b. Horsepower and rpm.
c. Volts, phase, and hertz.
d. Full-load amperage and service factor.
e. Sheave make, size in inches, and bore.
f. Sheave dimensions, center-to-center, and amount of adjustments in inches.

3. Test Data (Indicated and Actual Values):

a. Total airflow rate in cfm.
b. Total system static pressure in inches wg.
c. Fan rpm.
d. Discharge static pressure in inches wg.
e. Filter static-pressure differential in inches wg.
f. Preheat coil static-pressure differential in inches wg.
g. Cooling coil static-pressure differential in inches wg.
h. Heating coil static-pressure differential in inches wg.
i. Outside airflow in cfm.

j. Return airflow in cfm.
k. Outside-air damper position.
l. Return-air damper position.
m. Vortex damper position.

G. Apparatus-Coil Test Reports:

1. Coil Data:

a. System identification.
b. Location.
c. Coil type.
d. Number of rows.
e. Fin spacing in fins per inch o.c.
f. Make and model number.
g. Face area in sq. ft..
h. Tube size in NPS.
i. Tube and fin materials.
j. Circuiting arrangement.

2. Test Data (Indicated and Actual Values):

a. Airflow rate in cfm.
b. Average face velocity in fpm.
c. Air pressure drop in inches wg.
d. Outside-air, wet- and dry-bulb temperatures in deg F.
e. Return-air, wet- and dry-bulb temperatures in deg F.
f. Entering-air, wet- and dry-bulb temperatures in deg F.
g. Leaving-air, wet- and dry-bulb temperatures in deg F.
h. Water flow rate in gpm.
i. Water pressure differential in feet of head or psig.
j. Entering-water temperature in deg F.
k. Leaving-water temperature in deg F.
l. Refrigerant expansion valve and refrigerant types.
m. Refrigerant suction pressure in psig.
n. Refrigerant suction temperature in deg F.
o. Inlet steam pressure in psig.

H. Fan Test Reports: For supply, return, and exhaust fans, include the following:

1. Fan Data:

a. System identification.
b. Location.
c. Make and type.
d. Model number and size.
e. Manufacturer's serial number.
f. Arrangement and class.
g. Sheave make, size in inches, and bore.
h. Sheave dimensions, center-to-center, and amount of adjustments in inches.

2. Motor Data:

    a. Make and frame type and size.
    b. Horsepower and rpm.
    c. Volts, phase, and hertz.
    d. Full-load amperage and service factor.
    e. Sheave make, size in inches, and bore.
    f. Sheave dimensions, center-to-center, and amount of adjustments in inches.
    g. Number of belts, make, and size.

3. Test Data (Indicated and Actual Values):

    a. Total airflow rate in cfm.
    b. Total system static pressure in inches wg.
    c. Fan rpm.
    d. Discharge static pressure in inches wg.
    e. Suction static pressure in inches wg.

I. Air-Terminal-Device Reports:

1. Unit Data:

    a. System and air-handling unit identification.
    b. Location and zone.
    c. Test apparatus used.
    d. Area served.
    e. Air-terminal-device make.
    f. Air-terminal-device number from system diagram.
    g. Air-terminal-device type and model number.
    h. Air-terminal-device size.
    i. Air-terminal-device effective area in sq. ft..

2. Test Data (Indicated and Actual Values):

    a. Airflow rate in cfm.
    b. Air velocity in fpm.
    c. Preliminary airflow rate as needed in cfm.
    d. Preliminary velocity as needed in fpm.
    e. Final airflow rate in cfm.
    f. Final velocity in fpm.
    g. Space temperature in deg F.

J. System-Coil Reports: For reheat coils and water coils of terminal units, include the following:

1. Unit Data:

    a. System and air-handling unit identification.
    b. Location and zone.
    c. Room or riser served.
    d. Coil make and size.
    e. Flowmeter type.

2. Test Data (Indicated and Actual Values):

a. Airflow rate in cfm.
b. Entering-water temperature in deg F.
c. Leaving-water temperature in deg F.
d. Water pressure drop in feet of head or psig.
e. Entering-air temperature in deg F.
f. Leaving-air temperature in deg F.

K. Pump Test Reports: Calculate impeller size by plotting the shutoff head on pump curves and include the following:

1. Unit Data:

a. Unit identification.
b. Location.
c. Service.
d. Make and size.
e. Model and serial numbers.
f. Water flow rate in gpm.
g. Water pressure differential in feet of head or psig.
h. Required net positive suction head in feet of head or psig.
i. Pump rpm.
j. Impeller diameter in inches.
k. Motor make and frame size.
l. Motor horsepower and rpm.
m. Voltage at each connection.
n. Amperage for each phase.
o. Full-load amperage and service factor.
p. Seal type.

2. Test Data (Indicated and Actual Values):

a. Static head in feet of head or psig.
b. Pump shutoff pressure in feet of head or psig.
c. Actual impeller size in inches.
d. Full-open flow rate in gpm.
e. Full-open pressure in feet of head or psig.
f. Final discharge pressure in feet of head or psig.
g. Final suction pressure in feet of head or psig.
h. Final total pressure in feet of head or psig.
i. Final water flow rate in gpm.
j. Voltage at each connection.
k. Amperage for each phase.

3.16 ADDITIONAL TESTS

A. Within 90 days of completing TAB, perform additional testing and balancing to verify that balanced conditions are being maintained throughout and to correct unusual conditions.

B. Seasonal Periods: If initial TAB procedures were not performed during near-peak summer and winter conditions, perform additional testing, inspecting, and adjusting during near-peak summer and winter conditions.

END OF SECTION 15950

SECTION 16050
BASIC ELECTRICAL MATERIALS AND METHODS

PART 1 - GENERAL

1.1 RELATED DOCUMENTS

A. Drawings and general provisions of the Contract, including General and Supplementary Conditions and Division 1 Specification Sections, apply to this Section.

1.2 SUMMARY

A. This Section includes the following:

1. Supporting devices for electrical components.
2. Concrete equipment bases.
3. Electrical demolition.
4. Cutting and patching for electrical construction.
5. Touchup painting.

1.3 SUBMITTALS

A. Field Test Reports: Indicate and interpret test results for compliance with performance requirements.

1.4 QUALITY ASSURANCE

A. Electrical Components, Devices, and Accessories: Listed and labeled as defined in NFPA 70, Article 100, by a testing agency acceptable to authorities having jurisdiction, and marked for intended use.

B. Comply with NFPA 70.

1.5 COORDINATION

A. Coordinate chases, slots, inserts, sleeves, and openings with general construction work and arrange in building structure during progress of construction to facilitate the electrical installations that follow.

1. Set inserts and sleeves in poured-in-place concrete, masonry work, and other structural components as they are constructed.

B. Sequence, coordinate, and integrate installing electrical materials and equipment for efficient flow of the Work. Coordinate installing large equipment requiring positioning before closing in the building.

C. Coordinate electrical service connections to components furnished by utility companies.

1. Coordinate installation and connection of exterior underground and overhead utilities and services, including provision for electricity-metering components.
2. Comply with requirements of authorities having jurisdiction and of utility company providing electrical power and other services.

D. Coordinate location of access panels and doors for electrical items that are concealed by finished surfaces. Access doors and panels are specified in Division 8 Section "Access Doors."

E. Where electrical identification devices are applied to field-finished surfaces, coordinate installation of identification devices with completion of finished surface.

F. Where electrical identification markings and devices will be concealed by acoustical ceilings and similar finishes, coordinate installation of these items before ceiling installation.

PART 2 - PRODUCTS

2.1 SUPPORTING DEVICES

A. Material: Cold-formed steel, with corrosion-resistant coating acceptable to authorities having jurisdiction.

B. Metal Items for Use Outdoors or in Damp Locations: Hot-dip galvanized steel.

C. Slotted-Steel Channel Supports: Flange edges turned toward web, and 9/16-inch- diameter slotted holes at a maximum of 2 inches o.c., in webs.

1. Channel Thickness: Selected to suit structural loading.
2. Fittings and Accessories: Products of the same manufacturer as channel supports.

D. Raceway and Cable Supports: Manufactured clevis hangers, riser clamps, straps, threaded C-clamps with retainers, ceiling trapeze hangers, wall brackets, and spring-steel clamps or click-type hangers.

E. Pipe Sleeves: ASTM A 53, Type E, Grade A, Schedule 40, galvanized steel, plain ends.

F. Cable Supports for Vertical Conduit: Factory-fabricated assembly consisting of threaded body and insulating wedging plug for nonarmored electrical cables in riser conduits. Plugs have number and size of conductor gripping holes as required to suit individual risers. Body constructed of malleable-iron casting with hot-dip galvanized finish.

G. Expansion Anchors: Carbon-steel wedge or sleeve type.

H. Toggle Bolts: All-steel springhead type.

2.2 CONCRETE BASES

A. Concrete Forms and Reinforcement Materials: As specified in Division 3 Section "Cast-in-Place Concrete."

B. Concrete: 3000-psi, 28-day compressive strength as specified in Division 3 Section "Cast-in-Place Concrete."

2.3 TOUCHUP PAINT

A. For Equipment: Equipment manufacturer's paint selected to match installed equipment finish.

B. Galvanized Surfaces: Zinc-rich paint recommended by item manufacturer.

PART 3 - EXECUTION

3.1 ELECTRICAL EQUIPMENT INSTALLATION

A. Headroom Maintenance: If mounting heights or other location criteria are not indicated, arrange and install components and equipment to provide the maximum possible headroom.

B. Materials and Components: Install level, plumb, and parallel and perpendicular to other building systems and components, unless otherwise indicated.

C. Equipment: Install to facilitate service, maintenance, and repair or replacement of components. Connect for ease of disconnecting, with minimum interference with other installations.

D. Right of Way: Give to raceways and piping systems installed at a required slope.

3.2 ELECTRICAL SUPPORTING DEVICE APPLICATION

A. Damp Locations and Outdoors: Hot-dip galvanized materials or nonmetallic, U-channel system components.

B. Dry Locations: Steel materials.

C. Support Clamps for PVC Raceways: Click-type clamp system.

D. Selection of Supports: Comply with manufacturer's written instructions.

E. Strength of Supports: Adequate to carry present and future loads, times a safety factor of at least four; minimum of 200-lb design load.

3.3 SUPPORT INSTALLATION

A. Install support devices to securely and permanently fasten and support electrical components.

B. Install individual and multiple raceway hangers and riser clamps to support raceways. Provide U-bolts, clamps, attachments, and other hardware necessary for hanger assemblies and for securing hanger rods and conduits.

C. Support parallel runs of horizontal raceways together on trapeze- or bracket-type hangers.

D. Size supports for multiple raceway installations so capacity can be increased by a 25 percent minimum in the future.

E. Support individual horizontal raceways with separate, malleable-iron pipe hangers or clamps.

F. Install 1/4-inch- diameter or larger threaded steel hanger rods, unless otherwise indicated.

G. Spring-steel fasteners specifically designed for supporting single conduits or tubing may be used instead of malleable-iron hangers for 1-1/2-inch and smaller raceways serving lighting and receptacle branch circuits above suspended ceilings and for fastening raceways to slotted channel and angle supports.

H. Arrange supports in vertical runs so the weight of raceways and enclosed conductors is carried entirely by raceway supports, with no weight load on raceway terminals.

I. Simultaneously install vertical conductor supports with conductors.

J. Separately support cast boxes that are threaded to raceways and used for fixture support. Support sheet-metal boxes directly from the building structure or by bar hangers. If bar hangers are used, attach bar to raceways on opposite sides of the box and support the raceway with an approved fastener not more than 24 inches from the box.

K. Install metal channel racks for mounting cabinets, panelboards, disconnect switches, control enclosures, pull and junction boxes, transformers, and other devices unless components are mounted directly to structural elements of adequate strength.

L. Install sleeves for cable and raceway penetrations of concrete slabs and walls unless core-drilled holes are used. Install sleeves for cable and raceway penetrations of masonry and fire-rated gypsum walls and of all other fire-rated floor and wall assemblies. Install sleeves during erection of concrete and masonry walls.

M. Securely fasten electrical items and their supports to the building structure, unless otherwise indicated. Perform fastening according to the following unless other fastening methods are indicated:

1. Wood: Fasten with wood screws or screw-type nails.
2. Masonry: Toggle bolts on hollow masonry units and expansion bolts on solid masonry units.
3. New Concrete: Concrete inserts with machine screws and bolts.
4. Existing Concrete: Expansion bolts.
5. Steel: Welded threaded studs or spring-tension clamps on steel.

a. Field Welding: Comply with AWS D1.1.

6. Welding to steel structure may be used only for threaded studs, not for conduits, pipe straps, or other items.
7. Light Steel: Sheet-metal screws.
8. Fasteners: Select so the load applied to each fastener does not exceed 25 percent of its proof-test load.

3.4 CONCRETE BASES

A. Construct concrete bases of dimensions indicated, but not less than 4 inches larger, in both directions, than supported unit. Follow supported equipment manufacturer's anchorage recommendations and setting templates for anchor-bolt and tie locations, unless otherwise indicated. Use 3000-psi, 28-day compressive-strength concrete and reinforcement as specified in Division 3 Section "Cast-in-Place Concrete."

3.5 DEMOLITION

A. Protect existing electrical equipment and installations indicated to remain. If damaged or disturbed in the course of the Work, remove damaged portions and install new products of equal capacity, quality, and functionality.

B. Accessible Work: Remove exposed electrical equipment and installations, indicated to be demolished, in their entirety.

C. Abandoned Work: Cut and remove buried raceway and wiring, indicated to be abandoned in place, 2 inches below the surface of adjacent construction. Cap raceways and patch surface to match existing finish.

D. Remove demolished material from Project site.

E. Remove, store, clean, reinstall, reconnect, and make operational components indicated for relocation.

3.6 CUTTING AND PATCHING

A. Cut, channel, chase, and drill floors, walls, partitions, ceilings, and other surfaces required to permit electrical installations. Perform cutting by skilled mechanics of trades involved.

B. Repair and refinish disturbed finish materials and other surfaces to match adjacent undisturbed surfaces. Install new fireproofing where existing firestopping has been disturbed. Repair and refinish materials and other surfaces by skilled mechanics of trades involved.

3.7 FIELD QUALITY CONTROL

A. Inspect installed components for damage and faulty work, including the following:

1. Supporting devices for electrical components.
2. Concrete bases.
3. Electrical demolition.
4. Cutting and patching for electrical construction.
5. Touchup painting.

3.8 REFINISHING AND TOUCHUP PAINTING

A. Refinish and touch up paint.

1. Clean damaged and disturbed areas and apply primer, intermediate, and finish coats to suit the degree of damage at each location.
2. Follow paint manufacturer's written instructions for surface preparation and for timing and application of successive coats.
3. Repair damage to galvanized finishes with zinc-rich paint recommended by manufacturer.
4. Repair damage to PVC or paint finishes with matching touchup coating recommended by manufacturer.

3.9 CLEANING AND PROTECTION

A. On completion of installation, including outlets, fittings, and devices, inspect exposed finish. Remove burrs, dirt, paint spots, and construction debris.

B. Protect equipment and installations and maintain conditions to ensure that coatings, finishes, and cabinets are without damage or deterioration at time of Substantial Completion.

END OF SECTION 16050

SECTION 16060
GROUNDING AND BONDING

PART 1 - GENERAL

1.1 RELATED DOCUMENTS

A. Drawings and general provisions of the Contract, including General and Supplementary Conditions and Division 1 Specification Sections, apply to this Section.

1.2 SUMMARY

A. This Section includes methods and materials for grounding systems and equipment, plus the following special applications:

1. Underground distribution grounding.

1.3 SUBMITTALS

A. Product Data: For each type of product indicated.

B. Other Informational Submittals: Plans showing dimensioned as-built locations of grounding features specified in Part 3 "Field Quality Control" Article, including the following:

1. Test wells.
2. Ground rods.
3. Grounding arrangements and connections for separately derived systems.

C. Qualification Data: For testing agency and testing agency's field supervisor.

D. Field quality-control test reports.

E. Operation and Maintenance Data: For grounding to include the following in emergency, operation, and maintenance manuals:

1. Instructions for periodic testing and inspection of grounding features at test wells, grounding connections for separately derived systems based on NETA MTS.

a. Tests shall be to determine if ground resistance or impedance values remain within specified maximums, and instructions shall recommend corrective action if they do not.
b. Include recommended testing intervals.

1.4 QUALITY ASSURANCE

A. Testing Agency Qualifications: An independent agency, with the experience and capability to conduct the testing indicated, that is a member company of the InterNational Electrical Testing Association or is a nationally recognized testing laboratory (NRTL) as defined by OSHA in 29 CFR 1910.7, and that is acceptable to authorities having jurisdiction.

1. Testing Agency's Field Supervisor: Person currently certified by the InterNational Electrical Testing Association to supervise on-site testing specified in Part 3.

B. Electrical Components, Devices, and Accessories: Listed and labeled as defined in NFPA 70, Article 100, by a testing agency acceptable to authorities having jurisdiction, and marked for intended use.

C. Comply with UL 467 for grounding and bonding materials and equipment.

PART 2 - PRODUCTS

2.1 CONDUCTORS

A. Insulated Conductors: Copper wire or cable insulated for 600 V unless otherwise required by applicable Code or authorities having jurisdiction.

B. Bare Copper Conductors:

1. Solid Conductors: ASTM B 3.
2. Stranded Conductors: ASTM B 8.
3. Tinned Conductors: ASTM B 33.
4. Bonding Cable: 28 kcmil, 14 strands of No. 17 AWG conductor, 1/4 inch in diameter.
5. Bonding Conductor: No. 4 or No. 6 AWG, stranded conductor.
6. Bonding Jumper: Copper tape, braided conductors, terminated with copper ferrules; 1-5/8 inches wide and 1/16 inch thick.
7. Tinned Bonding Jumper: Tinned-copper tape, braided conductors, terminated with copper ferrules; 1-5/8 inches wide and 1/16 inch thick.

C. Grounding Bus: Rectangular bars of annealed copper, 1/4 by 2 inches in cross section, unless otherwise indicated; with insulators.

2.2 CONNECTORS

A. Listed and labeled by a nationally recognized testing laboratory acceptable to authorities having jurisdiction for applications in which used, and for specific types, sizes, and combinations of conductors and other items connected.

B. Bolted Connectors for Conductors and Pipes: Copper or copper alloy, bolted pressure-type, with at least two bolts.

1. Pipe Connectors: Clamp type, sized for pipe.

C. Welded Connectors: Exothermic-welding kits of types recommended by kit manufacturer for materials being joined and installation conditions.

2.3 GROUNDING ELECTRODES

A. Ground Rods: Copper-clad steel, sectional type; 3/4 inch by10 feet in diameter.

PART 3 - EXECUTION

3.1 APPLICATIONS

A. Conductors: Install solid conductor for No. 8AWG and smaller, and stranded conductors for No. 6 AWG and larger, unless otherwise indicated.

B. Underground Grounding Conductors: Install bare tinned-copper conductor, No. 2/0AWG minimum.

1. Bury at least 24 inches below grade.

C. Grounding Bus: Install in electrical and telephone equipment rooms, in rooms housing service equipment, and elsewhere as indicated.

1. Install bus on insulated spacers 1 inch, minimum, from wall 6 inches above finished floor, unless otherwise indicated.
2. Where indicated on both sides of doorways, route bus up to top of door frame, across top of doorway, down to specified height above floor, and connect to horizontal bus.

D. Conductor Terminations and Connections:

1. Pipe and Equipment Grounding Conductor Terminations: Bolted connectors.
2. Underground Connections: Welded connectors, except at test wells and as otherwise indicated.
3. Connections to Ground Rods at Test Wells: Bolted connectors.
4. Connections to Structural Steel: Welded connectors.

3.2 GROUNDING UNDERGROUND DISTRIBUTION SYSTEM COMPONENTS

A. Comply with IEEE C2 grounding requirements.

B. Grounding Manholes and Handholes: Install a driven ground rod through manhole or handhole floor, close to wall, and set rod depth so 4 inches will extend above finished floor. If necessary, install ground rod before manhole is placed and provide No. 1/0 AWG bare, tinned-copper conductor from ground rod into manhole through a waterproof sleeve in manhole wall. Protect ground rods passing through concrete floor with a double wrapping of pressure-sensitive insulating tape or heat-shrunk insulating sleeve from 2 inches above to 6 inches below concrete. Seal floor opening with waterproof, nonshrink grout.

C. Grounding Connections to Manhole Components: Bond exposed-metal parts such as inserts, cable racks, pulling irons, ladders, and cable shields within each manhole or handhole, to ground rod or grounding conductor. Make connections with No. 4 AWG minimum, stranded, hard-drawn copper bonding conductor. Train conductors level or plumb around corners and fasten to manhole walls. Connect to cable armor and cable shields as recommended by manufacturer of splicing and termination kits.

D. Pad-Mounted Transformers and Switches: Install two ground rods and ground ring around the pad. Ground pad-mounted equipment and noncurrent-carrying metal items associated with substations by connecting them to underground cable and grounding electrodes. Install tinned-copper conductor not less than No. 2 AWG for ground ring and for taps to equipment grounding terminals. Bury ground ring not less than 6 inches from the foundation.

3.3 EQUIPMENT GROUNDING

A. Install insulated equipment grounding conductors with all feeders and branch circuits.

B. Install insulated equipment grounding conductors with the following items, in addition to those required by NFPA 70:

1. Feeders and branch circuits.
2. Lighting circuits.
3. Receptacle circuits.
4. Single-phase motor and appliance branch circuits.
5. Three-phase motor and appliance branch circuits.
6. Flexible raceway runs.
7. Armored and metal-clad cable runs.
8. Computer and Rack-Mounted Electronic Equipment Circuits: Install insulated equipment grounding conductor in branch-circuit runs from equipment-area power panels and power-distribution units.

C. Air-Duct Equipment Circuits: Install insulated equipment grounding conductor to duct-mounted electrical devices operating at 120 V and more, including air cleaners, heaters, dampers, humidifiers, and other duct electrical equipment. Bond conductor to each unit and to air duct and connected metallic piping.

D. Water Heater, Heat-Tracing, and Antifrost Heating Cables: Install a separate insulated equipment grounding conductor to each electric water heater and heat-tracing cable. Bond conductor to heater units, piping, connected equipment, and components.

E. Signal and Communication Equipment: For telephone, alarm, voice and data, and other communication equipment, provide No. 4 AWG minimum insulated grounding conductor in raceway from grounding electrode system to each service location, terminal cabinet, wiring closet, and central equipment location.

1. Service and Central Equipment Locations and Wiring Closets: Terminate grounding conductor on a 1/4-by-2-by-12-inch grounding bus.
2. Terminal Cabinets: Terminate grounding conductor on cabinet grounding terminal.

F. Metal Poles Supporting Outdoors Lighting Fixtures: Install grounding electrode and a separate insulated equipment-grounding conductor in addition to grounding conductor installed with branch-circuit conductors.

3.4 INSTALLATION

A. Grounding Conductors: Route along shortest and straightest paths possible, unless otherwise indicated or required by Code. Avoid obstructing access or placing conductors where they may be subjected to strain, impact, or damage.

B. Ground Rods: Drive rods until tops are 2 inches below finished floor or final grade, unless otherwise indicated.

1. Interconnect ground rods with grounding electrode conductor below grade and as otherwise indicated. Make connections without exposing steel or damaging coating, if any.
2. For grounding electrode system, install at least three rods spaced at least one-rod length from each other and located at least the same distance from other grounding electrodes, and connect to the service grounding electrode conductor.

C. Test Wells: Ground rod driven through drilled hole in bottom of handhole. Handholes are specified in Division 2 Section "Underground Ducts and Utility Structures," and shall be at least 12 inches deep, with cover.

1. Test Wells: Install at least one test well for each service, unless otherwise indicated. Install at the ground rod electrically closest to service entrance. Set top of test well flush with finished grade or floor.

D. Bonding Straps and Jumpers: Install in locations accessible for inspection and maintenance, except where routed through short lengths of conduit.

1. Bonding to Structure: Bond straps directly to basic structure, taking care not to penetrate any adjacent parts.
2. Bonding to Equipment Mounted on Vibration Isolation Hangers and Supports: Install so vibration is not transmitted to rigidly mounted equipment.
3. Use exothermic-welded connectors for outdoor locations, but if a disconnect-type connection is required, use a bolted clamp.

E. Grounding and Bonding for Piping:

1. Metal Water Service Pipe: Install insulated copper grounding conductors, in conduit, from building's main service equipment, or grounding bus, to main metal water service entrances to building. Connect grounding conductors to main metal water service pipes, using a bolted clamp connector or by bolting a lug-type connector to a pipe flange, using one of the lug bolts of the flange. Where a dielectric main water fitting is installed, connect grounding conductor on street side of fitting. Bond metal grounding conductor conduit or sleeve to conductor at each end.
2. Water Meter Piping: Use braided-type bonding jumpers to electrically bypass water meters. Connect to pipe with a bolted connector.

3. Bond each aboveground portion of gas piping system downstream from equipment shutoff valve.

F. Bonding Interior Metal Ducts: Bond metal air ducts to equipment grounding conductors of associated fans, blowers, electric heaters, and air cleaners. Install tinned bonding jumper to bond across flexible duct connections to achieve continuity.

G. Grounding for Steel Building Structure: Install a driven ground rod at base of each corner column and at intermediate exterior columns at distances not more than 60 feet apart.

3.5 FIELD QUALITY CONTROL

A. Testing Agency: Engage a qualified testing and inspecting agency to perform the following field tests and inspections and prepare test reports:

B. Perform the following tests and inspections and prepare test reports:

1. After installing grounding system but before permanent electrical circuits have been energized, test for compliance with requirements.
2. Test completed grounding system at each location where a maximum ground-resistance level is specified, at service disconnect enclosure grounding terminal, at ground test wells, and at individual ground rods. Make tests at ground rods before any conductors are connected.

    a. Measure ground resistance not less than two full days after last trace of precipitation and without soil being moistened by any means other than natural drainage or seepage and without chemical treatment or other artificial means of reducing natural ground resistance.
    b. Perform tests by fall-of-potential method according to IEEE 81.

3. Prepare dimensioned drawings locating each test well, ground rod and ground rod assembly, and other grounding electrodes. Identify each by letter in alphabetical order, and key to the record of tests and observations. Include the number of rods driven and their depth at each location, and include observations of weather and other phenomena that may affect test results. Describe measures taken to improve test results.

C. Report measured ground resistances that exceed the following values:

1. Power and Lighting Equipment or System with Capacity 500 kVA and less: 10 ohms.
2. Power and Lighting Equipment or System with Capacity 500 to 1000 kVA: 5 ohms.
3. Power Distribution Units or Panelboards Serving Electronic Equipment: 3 ohm(s).
4. Pad-Mounted Equipment: 5 ohms.
5. Manhole Grounds: 10 ohms.

D. Excessive Ground Resistance: If resistance to ground exceeds specified values, notify Architect promptly and include recommendations to reduce ground resistance.

END OF SECTION 16060

SECTION 16075
ELECTRICAL IDENTIFICATION

PART 1 - GENERAL

1.1 RELATED DOCUMENTS

A. Drawings and general provisions of the Contract, including General and Supplementary Conditions and Division 1 Specification Sections, apply to this Section.

1.2 SUMMARY

A. This Section includes electrical identification materials and devices required to comply with ANSI C2, NFPA 70, OSHA standards, and authorities having jurisdiction.

1.3 SUBMITTALS

A. Product Data: For each electrical identification product indicated.

1.4 QUALITY ASSURANCE

A. Comply with NFPA 70.

B. Comply with ANSI A13.1 and NFPA 70 for color-coding.

PART 2 - PRODUCTS

2.1 RACEWAY AND CABLE LABELS

A. Comply with ANSI A13.1, Table 3, for minimum size of letters for legend and for minimum length of color field for each raceway and cable size.

1. Color: Black letters on orange field.
2. Legend: Indicates voltage and service.

B. Adhesive Labels: Preprinted, flexible, self-adhesive vinyl with legend overlaminated with a clear, weather- and chemical-resistant coating.

C. Pretensioned, Wraparound Plastic Sleeves: Flexible, preprinted, color-coded, acrylic band sized to suit the diameter of the line it identifies and arranged to stay in place by pretensioned gripping action when placed in position.

D. Colored Adhesive Tape: Self-adhesive vinyl tape not less than 3 mils thick by 1 to 2 inches wide.

E. Underground-Line Warning Tape: Permanent, bright-colored, continuous-printed, vinyl tape.

1. Not less than 6 inches wide by 4 mils thick.
2. Compounded for permanent direct-burial service.
3. Embedded continuous metallic strip or core.
4. Printed legend indicating type of underground line.

F. Tape Markers: Vinyl or vinyl-cloth, self-adhesive, wraparound type with preprinted numbers and letters.

G. Aluminum, Wraparound Marker Bands: Bands cut from 0.014-inch- thick aluminum sheet, with stamped or embossed legend, and fitted with slots or ears for permanently securing around wire or cable jacket or around groups of conductors.

H. Plasticized Card-Stock Tags: Vinyl cloth with preprinted and field-printed legends. Orange background, unless otherwise indicated, with eyelet for fastener.

I. Aluminum-Faced, Card-Stock Tags: Weather-resistant, 18-point minimum card stock faced on both sides with embossable aluminum sheet, 0.002 inch thick, laminated with moisture-resistant acrylic adhesive, punched for fasteners, and preprinted with legends to suit each application.

J. Brass or Aluminum Tags: 2 by 2 by 0.05-inch metal tags with stamped legend, punched for fastener.

2.2 NAMEPLATES AND SIGNS

A. Safety Signs: Comply with 29 CFR, Chapter XVII, Part 1910.145.

B. Engraved Plastic Nameplates and Signs: Engraving stock, melamine plastic laminate, minimum 1/16 inch thick for signs up to 20 sq. in. and 1/8 inch thick for larger sizes.

1. Engraved legend with black letters on white face.
2. Punched or drilled for mechanical fasteners.

C. Baked-Enamel Signs for Interior Use: Preprinted aluminum signs, punched or drilled for fasteners, with colors, legend, and size required for the application. 1/4-inch grommets in corners for mounting.

D. Exterior, Metal-Backed, Butyrate Signs: Weather-resistant, nonfading, preprinted, cellulose-acetate butyrate signs with 0.0396-inch galvanized-steel backing; and with colors, legend, and size required for the application. 1/4-inch grommets in corners for mounting.

E. Fasteners for Nameplates and Signs: Self-tapping, stainless-steel screws or No. 10/32, stainless-steel machine screws with nuts and flat and lock washers.

2.3 MISCELLANEOUS IDENTIFICATION PRODUCTS

A. Cable Ties: Fungus-inert, self-extinguishing, one-piece, self-locking, Type 6/6 nylon cable ties.

1. Minimum Width: 3/16 inch.
2. Tensile Strength: 50 lb minimum.
3. Temperature Range: Minus 40 to plus 185 deg F.
4. Color: According to color-coding.

B. Paint: Formulated for the type of surface and intended use.

1. Primer for Galvanized Metal: Single-component acrylic vehicle formulated for galvanized surfaces.
2. Primer for Concrete Masonry Units: Heavy-duty-resin block filler.
3. Primer for Concrete: Clear, alkali-resistant, binder-type sealer.
4. Enamel: Silicone-alkyd or alkyd urethane as recommended by primer manufacturer.

PART 3 - EXECUTION

3.1 INSTALLATION

A. Identification Materials and Devices: Install at locations for most convenient viewing without interference with operation and maintenance of equipment.

B. Lettering, Colors, and Graphics: Coordinate names, abbreviations, colors, and other designations with corresponding designations in the Contract Documents or with those required by codes and standards. Use consistent designations throughout Project.

C. Sequence of Work: If identification is applied to surfaces that require finish, install identification after completing finish work.

D. Self-Adhesive Identification Products: Clean surfaces before applying.

E. Install painted identification according to manufacturer's written instructions and as follows:

1. Clean surfaces of dust, loose material, and oily films before painting.
2. Prime surfaces using type of primer specified for surface.
3. Apply one intermediate and one finish coat of enamel.

F. Color Banding Raceways and Exposed Cables: Band exposed and accessible raceways of the systems listed below:

1. Bands: Pretensioned, wraparound plastic sleeves; colored adhesive tape; or a combination of both. Make each color band 2 inches wide, completely encircling conduit, and place adjacent bands of two-color markings in contact, side by side.
2. Band Locations: At changes in direction, at penetrations of walls and floors, at 50-foot maximum intervals in straight runs, and at 25-foot maximum intervals in congested areas.
3. Apply the following colors to the systems listed below:

a. Fire Alarm System: Red.

b. Fire-Suppression Supervisory and Control System: Red and yellow.
c. Mechanical and Electrical Supervisory System: Green and blue.
d. Telecommunication System: Green and yellow.

G. Caution Labels for Indoor Boxes and Enclosures for Power and Lighting: Install pressure-sensitive, self-adhesive labels identifying system voltage with black letters on orange background. Install on exterior of door or cover.

H. Circuit Identification Labels on Boxes: Install labels externally.

1. Exposed Boxes: Pressure-sensitive, self-adhesive plastic label on cover.
2. Concealed Boxes: Plasticized card-stock tags.
3. Labeling Legend: Permanent, waterproof listing of panel and circuit number or equivalent.

I. Paths of Underground Electrical Lines: During trench backfilling, for exterior underground power, control, signal, and communication lines, install continuous underground plastic line marker located directly above line at 6 to 8 inches below finished grade. Where width of multiple lines installed in a common trench or concrete envelope does not exceed 16 inches overall, use a single line marker. Install line marker for underground wiring, both direct-buried cables and cables in raceway.

J. Color-Coding of Secondary Phase Conductors: Use the following colors for service, feeder and branch-circuit phase conductors:

1. 208/120-V Conductors:

a. Phase A: Black.
b. Phase B: Red.
c. Phase C: Blue.

2. 480/277-V Conductors:

a. Phase A: Yellow.
b. Phase B: Brown.
c. Phase C: Orange.

3. Factory apply color the entire length of conductors, except the following field-applied, color-coding methods may be used instead of factory-coded wire for sizes larger than No. 10 AWG:

a. Colored, pressure-sensitive plastic tape in half-lapped turns for a distance of 6 inches from terminal points and in boxes where splices or taps are made. Apply last two turns of tape with no tension to prevent possible unwinding. Use 1-inch-wide tape in colors specified. Adjust tape bands to avoid obscuring cable identification markings.
b. Colored cable ties applied in groups of three ties of specified color to each wire at each terminal or splice point starting 3 inches from the terminal and spaced 3 inches apart. Apply with a special tool or pliers, tighten to a snug fit, and cut off excess length.

K. Power-Circuit Identification: Metal tags or aluminum, wraparound marker bands for cables, feeders, and power circuits in vaults, pull and junction boxes, manholes, and switchboard rooms.

1. Legend: 1/4-inch- steel letter and number stamping or embossing with legend corresponding to indicated circuit designations.
2. Tag Fasteners: Nylon cable ties.
3. Band Fasteners: Integral ears.

L. Apply identification to conductors as follows:

1. Conductors to Be Extended in the Future: Indicate source and circuit numbers.
2. Multiple Power or Lighting Circuits in the Same Enclosure: Identify each conductor with source, voltage, circuit number, and phase. Use color-coding to identify circuits' voltage and phase.
3. Multiple Control and Communication Circuits in the Same Enclosure: Identify each conductor by its system and circuit designation. Use a consistent system of tags, color-coding, or cable marking tape.

M. Apply warning, caution, and instruction signs as follows:

1. Warnings, Cautions, and Instructions: Install to ensure safe operation and maintenance of electrical systems and of items to which they connect. Install engraved plastic-laminated instruction signs with approved legend where instructions are needed for system or equipment operation. Install metal-backed butyrate signs for outdoor items.
2. Emergency Operation: Install engraved laminated signs with white legend on red background with minimum 3/8-inch- high lettering for emergency instructions on power transfer, load shedding, and other emergency operations.

N. Equipment Identification Labels: Engraved plastic laminate. Install on each unit of equipment, including central or master unit of each system. This includes power, lighting, communication, signal, and alarm systems, unless units are specified with their own self-explanatory identification. Unless otherwise indicated, provide a single line of text with 1/2-inch- high lettering on 1-1/2-inch- high label; where two lines of text are required, use labels 2 inches high. Use white lettering on black field. Apply labels for each unit of the following categories of equipment using mechanical fasteners:

1. Panelboards, electrical cabinets, and enclosures.
2. Access doors and panels for concealed electrical items.
3. Electrical switchgear and switchboards.
4. Electrical substations.
5. Emergency system boxes and enclosures.
6. Motor-control centers.
7. Disconnect switches.
8. Enclosed circuit breakers.
9. Motor starters.
10. Push-button stations.
11. Power transfer equipment.
12. Contactors.
13. Remote-controlled switches.
14. Dimmers.

15. Control devices.
16. Transformers.
17. Fire alarm master station or control panel.

END OF SECTION 16075

SECTION 16080
ELECTRICAL TESTING

PART 1 - GENERAL

1.1 RELATED DOCUMENTS

A. Drawings and general provisions of the Contract, including General and Supplementary Conditions and Division 1 Specification Sections, apply to this Section.

1.2 SUMMARY

A. This Section includes general requirements for electrical field testing and inspecting. Detailed requirements are specified in each Section containing components that require testing. General requirements include the following:

1. Qualifications of testing agencies and their personnel.
2. Suitability of test equipment.
3. Calibration of test instruments.
4. Coordination requirements for testing and inspecting.
5. Reporting requirements for testing and inspecting.

1.3 QUALITY ASSURANCE

A. Testing Agency Qualifications: As specified in each Section containing electrical testing requirements and in subparagraph and associated subparagraph below.

1. Independent Testing Agencies: Independent of manufacturers, suppliers, and installers of components to be tested or inspected.

    a. Testing Agency's Field Supervisor for Power Component Testing: Person currently certified by the InterNational Electrical Testing Association or the National Institute for Certification in Engineering Technologies to supervise on-site testing specified in Division 16 power component Sections.

B. Test Equipment Suitability: Comply with NETA ATS, Section 5.2.

C. Test Equipment Calibration: Comply with NETA ATS, Section 5.3.

PART 2 - NOT USED

PART 3 - EXECUTION

3.1 GENERAL TESTS AND INSPECTIONS

A. If a group of tests are specified to be performed by an independent testing agency, prepare systems, equipment, and components for tests and inspections, and perform preliminary tests to ensure that systems, equipment, and components are ready for independent agency testing. Include the following minimum preparations as appropriate:

1. Perform insulation-resistance tests.
2. Perform continuity tests.
3. Perform rotation test (for motors to be tested).
4. Provide a stable source of single-phase, 208/120-V electrical power for test instrumentation at each test location.

B. Test and Inspection Reports: In addition to requirements specified elsewhere, report the following:

1. Manufacturer's written testing and inspecting instructions.
2. Calibration and adjustment settings of adjustable and interchangeable devices involved in tests.
3. Tabulation of expected measurement results made before measurements.
4. Tabulation of "as-found" and "as-left" measurement and observation results.

END OF SECTION 16080

SECTION 16120
CONDUCTORS AND CABLES

PART 1 - GENERAL

1.1 RELATED DOCUMENTS

A. Drawings and general provisions of the Contract, including General and Supplementary Conditions and Division 1 Specification Sections, apply to this Section.

1.2 SUMMARY

A. This Section includes building wires and cables and associated connectors, splices, and terminations for wiring systems rated 600 V and less.

B. Related Sections include the following:

1. Division 16 Section "Control/Signal Transmission Media" for transmission media used for control and signal circuits.

1.3 SUBMITTALS

A. Product Data: For each type of product indicated.

B. Qualification Data: For testing agency.

C. Field Quality-Control Test Reports: From a qualified testing and inspecting agency engaged by Contractor.

1.4 QUALITY ASSURANCE

A. Testing Agency Qualifications: Testing agency as defined by OSHA in 29 CFR 1910.7 or a member company of the InterNational Electrical Testing Association and that is acceptable to authorities having jurisdiction.

B. Electrical Components, Devices, and Accessories: Listed and labeled as defined in NFPA 70, Article 100, by a testing agency acceptable to authorities having jurisdiction, and marked for intended use.

C. Comply with NFPA 70.

PART 2 - PRODUCTS

2.1 MANUFACTURERS

A. In other Part 2 articles where subparagraph titles below introduce lists, the following requirements apply for product selection:

1. Manufacturers: Subject to compliance with requirements, provide products by the manufacturers specified.

2.2 CONDUCTORS AND CABLES

A. Manufacturers:

1. Alcan Aluminum Corporation; Alcan Cable Div.
2. American Insulated Wire Corp.; a Leviton Company.
3. General Cable Corporation.
4. Senator Wire & Cable Company.
5. Southwire Company.

B. Refer to Part 3 "Conductor and Insulation Applications" Article for insulation type, cable construction, and ratings.

C. Conductor Material: Copper complying with NEMA WC 5 or 7; stranded conductor.

D. Conductor Insulation Types: Type THW, THHN-THWN, UF and SO complying with NEMA WC 5 or 7.

E. Multiconductor Cable: Metal-clad cable, Type MC with ground wire – permitted use is limited to 6-foot long sections from junction box to light fixtures or within casework.

2.3 CONNECTORS AND SPLICES

A. Manufacturers:

1. AFC Cable Systems, Inc.
2. AMP Incorporated/Tyco International.
3. Hubbell/Anderson.
4. O-Z/Gedney; EGS Electrical Group LLC.
5. 3M Company; Electrical Products Division.

B. Description: Factory-fabricated connectors and splices of size, ampacity rating, material, type, and class for application and service indicated.

PART 3 - EXECUTION

3.1 CONDUCTOR AND INSULATION APPLICATIONS

A. Service Entrance: Type THHN-THWN, single conductors in raceway.

B. Exposed Feeders: Type THHN-THWN, single conductors in raceway.

C. Feeders Concealed in Ceilings, Walls, and Partitions: Type THHN-THWN, single conductors in raceway.

D. Feeders Concealed in Concrete, below Slabs-on-Grade, and in Crawlspaces: Type THHN-THWN, single conductors in raceway.

E. Exposed Branch Circuits, including in Crawlspaces: Type THHN-THWN, single conductors in raceway.

F. Branch Circuits Concealed in Ceilings, Walls, and Partitions: Type THHN-THWN, single conductors in raceway.

G. Branch Circuits Concealed in Concrete and below Slabs-on-Grade: Type THHN-THWN, single conductors in raceway.

H. Underground Feeders and Branch Circuits: Type THW in raceway.

I. Cord Drops and Portable Appliance Connections: Type SO, hard service cord.

J. Fire Alarm Circuits: Power-limited, fire-protective, signaling circuit cable.

K. Class 1 Control Circuits: Type THHN-THWN, in raceway.

L. Class 2 Control Circuits: Type THHN-THWN, in raceway.

3.2 INSTALLATION

A. Conceal cables in finished walls, ceilings, and floors, unless otherwise indicated.

B. Use manufacturer-approved pulling compound or lubricant where necessary; compound used must not deteriorate conductor or insulation. Do not exceed manufacturer's recommended maximum pulling tensions and sidewall pressure values.

C. Use pulling means, including fish tape, cable, rope, and basket-weave wire/cable grips, that will not damage cables or raceway.

D. Install exposed cables parallel and perpendicular to surfaces of exposed structural members, and follow surface contours where possible.

E. Support cables according to Division 16 Section "Basic Electrical Materials and Methods."

F. Seal around cables penetrating fire-rated elements according to Division 7 Section "Through-Penetration Firestop Systems."

G. Identify and color-code conductors and cables according to Division 16 Section "Electrical Identification."

3.3 CONNECTIONS

A. Tighten electrical connectors and terminals according to manufacturer's published torque-tightening values. If manufacturer's torque values are not indicated, use those specified in UL 486A and UL 486B.

B. Make splices and taps that are compatible with conductor material and that possess equivalent or better mechanical strength and insulation ratings than unspliced conductors.

C. Wiring at Outlets: Install conductor at each outlet, with at least 6 inches of slack.

3.4 FIELD QUALITY CONTROL

A. Testing: Engage a qualified testing agency to perform the following field quality-control testing:

B. Testing: Perform the following field quality-control testing:

1. After installing conductors and cables and before electrical circuitry has been energized, test for compliance with requirements.
2. Perform each electrical test and visual and mechanical inspection stated in NETA ATS, Section 7.3.1. Certify compliance with test parameters.

C. Test Reports: Prepare a written report to record the following:

1. Test procedures used.
2. Test results that comply with requirements.
3. Test results that do not comply with requirements and corrective action taken to achieve compliance with requirements.

END OF SECTION 16120

SECTION 16130
RACEWAYS AND BOXES

PART 1 - GENERAL

1.1 RELATED DOCUMENTS

A. Drawings and general provisions of the Contract, including General and Supplementary Conditions and Division 1 Specification Sections, apply to this Section.

1.2 SUMMARY

A. This Section includes raceways, fittings, boxes, enclosures, and cabinets for electrical wiring.

B. Related Sections include the following:

1. Division 7 Section "Through-Penetration Firestop Systems" for firestopping materials and installation at penetrations through walls, ceilings, and other fire-rated elements.
2. Division 16 Section "Basic Electrical Materials and Methods" for supports, anchors, and identification products.
3. Division 16 Section "Wiring Devices" for devices installed in boxes and for floor-box service fittings.

1.3 DEFINITIONS

A. EMT: Electrical metallic tubing.

B. ENT: Electrical nonmetallic tubing.

C. FMC: Flexible metal conduit.

D. IMC: Intermediate metal conduit.

E. LFMC: Liquidtight flexible metal conduit.

F. LFNC: Liquidtight flexible nonmetallic conduit.

G. RNC: Rigid nonmetallic conduit.

1.4 SUBMITTALS

A. Product Data: For surface raceways, wireways and fittings, floor boxes, hinged-cover enclosures, and cabinets.

1.5 QUALITY ASSURANCE

A. Electrical Components, Devices, and Accessories: Listed and labeled as defined in NFPA 70, Article 100, by a testing agency acceptable to authorities having jurisdiction, and marked for intended use.

B. Comply with NFPA 70.

1.6 COORDINATION

A. Coordinate layout and installation of raceways, boxes, enclosures, cabinets, and suspension system with other construction that penetrates ceilings or is supported by them, including light fixtures, HVAC equipment, fire-suppression system, and partition assemblies.

PART 2 - PRODUCTS

2.1 MANUFACTURERS

A. In other Part 2 articles where subparagraph titles below introduce lists, the following requirements apply for product selection:

1. Manufacturers: Subject to compliance with requirements, provide products by the manufacturers specified.

2.2 METAL CONDUIT AND TUBING

A. Manufacturers:

1. AFC Cable Systems, Inc.
2. Anamet Electrical, Inc.; Anaconda Metal Hose.
3. Electri-Flex Co.
4. Grinnell Co./Tyco International; Allied Tube and Conduit Div.
5. LTV Steel Tubular Products Company.
6. Manhattan/CDT/Cole-Flex.
7. O-Z Gedney; Unit of General Signal.

B. Rigid Steel Conduit: ANSI C80.1.

C. IMC: ANSI C80.6.

D. Plastic-Coated Steel Conduit and Fittings: NEMA RN 1.

E. Plastic-Coated IMC and Fittings: NEMA RN 1.

F. EMT and Fittings: ANSI C80.3.

1. Fittings: Set-screw type with ground conductor.

G. FMC: Zinc-coated steel.

H. LFMC: Flexible steel conduit with PVC jacket.

I. Fittings: NEMA FB 1; compatible with conduit and tubing materials.

2.3 NONMETALLIC CONDUIT AND TUBING

A. Manufacturers:

1. American International.
2. Anamet Electrical, Inc.; Anaconda Metal Hose.
3. Certainteed Corp.; Pipe & Plastics Group.
4. Condux International.
5. ElecSYS, Inc.
6. Electri-Flex Co.
7. Lamson & Sessions; Carlon Electrical Products.
8. RACO; Division of Hubbell, Inc.
9. Spiralduct, Inc./AFC Cable Systems, Inc.
10. Thomas & Betts Corporation.

B. ENT: NEMA TC 13.

C. RNC: NEMA TC 2, Schedule 40 and Schedule 80 PVC.

D. ENT and RNC Fittings: NEMA TC 3; match to conduit or tubing type and material.

E. LFNC: UL 1660.

2.4 METAL WIREWAYS

A. Manufacturers:

1. Hoffman.
2. Square D.
3. Rittal Inc.

B. Material and Construction: Sheet metal sized and shaped as indicated, NEMA **[1]** **[3R]**.

C. Fittings and Accessories: Include couplings, offsets, elbows, expansion joints, adapters, hold-down straps, end caps, and other fittings to match and mate with wireways as required for complete system.

D. Select features, unless otherwise indicated, as required to complete wiring system and to comply with NFPA 70.

E. Wireway Covers: Hinged type.

F. Finish: Manufacturer's standard enamel finish.

2.5 SURFACE RACEWAYS

A. Surface Metal Raceways: Galvanized steel with snap-on covers. Finish with manufacturer's standard prime coating and off-white finished paint.

1. Manufacturers:

a. Mono-Systems.
b. Thomas & Betts Corporation.
c. Wiremold Company (The); Electrical Sales Division.

B. Types, sizes, and channels as indicated and required for each application, with fittings that match and mate with raceways.

C. Raceways shall have following features based on Wiremold #V-4000 series or approved equal:

1. Dual compartment with snap-on cover.

2. Fittings for blank communications outlets and duplex receptacles–Wiremold #V4049/5507B/5507D.

3. Wire Clips.

4. All required fittings and accessories.

5. For new construction, provide concealed conduit as indicated from low voltage compartment and terminate in accessible ceiling plenum. Provide conduits with bushings.

6. Duplex receptacles with dedicated neutral and ground for each circuit back to panel. Alternate circuiting to every other duplex receptacle where multiple circuits are indicated.

2.6 BOXES, ENCLOSURES, AND CABINETS

A. Manufacturers:

1. Cooper Crouse-Hinds; Div. of Cooper Industries, Inc.
2. Emerson/General Signal; Appleton Electric Company.
3. Erickson Electrical Equipment Co.
4. Hoffman.
5. Hubbell, Inc.; Killark Electric Manufacturing Co.
6. O-Z/Gedney; Unit of General Signal.
7. RACO; Division of Hubbell, Inc.
8. Spring City Electrical Manufacturing Co.

9. Thomas & Betts Corporation.
10. Walker Systems, Inc.; Wiremold Company (The).
11. Woodhead, Daniel Company; Woodhead Industries, Inc. Subsidiary.

B. Sheet Metal Outlet and Device Boxes: NEMA OS 1.

C. Cast-Metal Outlet and Device Boxes: NEMA FB 1, Type FD, with gasketed cover.

D. Floor Boxes: Cast metal (for slab-on grade applications), fully adjustable, rectangular. Floor boxes with combination of duplex receptacles and communications outlets shall be Wiremold #RFB4 series with RAMKII cover with insert to match finished floor.

E. Small Sheet Metal Pull and Junction Boxes: NEMA OS 1.

F. Cast-Metal Pull and Junction Boxes: NEMA FB 1, cast aluminum with gasketed cover.

G. Hinged-Cover Enclosures: NEMA 250, Type 1, with continuous hinge cover and flush latch.

1. Metal Enclosures: Steel, finished inside and out with manufacturer's standard enamel.
2. Nonmetallic Enclosures: Plastic, finished inside with radio-frequency-resistant paint.

H. Cabinets: NEMA 250, Type 1, galvanized steel box with removable interior panel and removable front, finished inside and out with manufacturer's standard enamel. Hinged door in front cover with flush latch and concealed hinge. Key latch to match panelboards. Include metal barriers to separate wiring of different systems and voltage and include accessory feet where required for freestanding equipment.

2.7 FACTORY FINISHES

A. Finish: For enclosure, or cabinet components, provide manufacturer's standard prime-coat finish ready for field painting. For surface metal raceways provide off-white paint.

PART 3 - EXECUTION

3.1 RACEWAY APPLICATION

A. Outdoors:

1. Exposed: Rigid steel or IMC.
2. Concealed: Rigid steel or IMC.
3. Underground, Single Run: RNC.
4. Underground, Grouped: RNC.
5. Connection to Vibrating Equipment (Including Transformers and Hydraulic, Pneumatic, Electric Solenoid, or Motor-Driven Equipment): LFMC.
6. Boxes and Enclosures: NEMA 250, Type 4.

B. Indoors:

1. Exposed: EMT.
2. Concealed: EMT.
3. Connection to Vibrating Equipment (Including Transformers and Hydraulic, Pneumatic, Electric Solenoid, or Motor-Driven Equipment): FMC; except use LFMC in damp or wet locations.
4. Damp or Wet Locations: Rigid steel conduit.
5. Boxes and Enclosures: NEMA 250, Type 1, except as follows:

    a. Damp or Wet Locations: NEMA 250, Type 4, stainless steel.

C. Minimum Raceway Size: 1/2-inch trade size

D. Raceway Fittings: Compatible with raceways and suitable for use and location.

1. Intermediate Steel Conduit: Use threaded rigid steel conduit fittings, unless otherwise indicated.
2. PVC Externally Coated, Rigid Steel Conduits: Use only fittings approved for use with that material. Patch all nicks and scrapes in PVC coating after installing conduits.

3.2 INSTALLATION

A. Keep raceways at least 6 inches away from parallel runs of flues and steam or hot-water pipes. Install horizontal raceway runs above water and steam piping.

B. Complete raceway installation before starting conductor installation.

C. Support raceways as specified in Division 16 Section "Basic Electrical Materials and Methods."

D. Install temporary closures to prevent foreign matter from entering raceways.

E. Protect stub-ups from damage where conduits rise through floor slabs. Arrange so curved portions of bends are not visible above the finished slab.

F. Make bends and offsets so ID is not reduced. Keep legs of bends in the same plane and keep straight legs of offsets parallel, unless otherwise indicated.

G. Conceal conduit and EMT within finished walls, ceilings, and floors, unless otherwise indicated.

1. Install concealed raceways with a minimum of bends in the shortest practical distance, considering type of building construction and obstructions, unless otherwise indicated.

H. Raceways Embedded in Slabs: Install in middle 1/3 of slab thickness where practical and leave at least 2 inches of concrete cover.

1. Secure raceways to reinforcing rods to prevent sagging or shifting during concrete placement.
2. Space raceways laterally to prevent voids in concrete.

3. Run conduit larger than 1-inch trade size parallel or at right angles to main reinforcement. Where at right angles to reinforcement, place conduit close to slab support.
4. Change from nonmetallic tubing to Schedule 80 nonmetallic conduit, rigid steel conduit, or IMC before rising above the floor.

I. Install exposed raceways parallel or at right angles to nearby surfaces or structural members and follow surface contours as much as possible.

1. Run parallel or banked raceways together on common supports.
2. Make parallel bends in parallel or banked runs. Use factory elbows only where elbows can be installed parallel; otherwise, provide field bends for parallel raceways.

J. Join raceways with fittings designed and approved for that purpose and make joints tight.

1. Use insulating bushings to protect conductors.

K. Tighten set screws of threadless fittings with suitable tools.

L. Terminations:

1. Where raceways are terminated with locknuts and bushings, align raceways to enter squarely and install locknuts with dished part against box. Use two locknuts, one inside and one outside box.
2. Where raceways are terminated with threaded hubs, screw raceways or fittings tightly into hub so end bears against wire protection shoulder. Where chase nipples are used, align raceways so coupling is square to box; tighten chase nipple so no threads are exposed.

M. Install pull wires in empty raceways. Use polypropylene or monofilament plastic line with not less than 200-lb tensile strength. Leave at least 12 inches of slack at each end of pull wire.

N. Telephone and Signal System Raceways, 2-Inch Trade Size and Smaller: In addition to above requirements, install raceways in maximum lengths of 150 feet and with a maximum of two 90-degree bends or equivalent. Separate lengths with pull or junction boxes where necessary to comply with these requirements.

O. Install raceway sealing fittings at suitable, approved, and accessible locations and fill them with UL-listed sealing compound. For concealed raceways, install each fitting in a flush steel box with a blank cover plate having a finish similar to that of adjacent plates or surfaces. Install raceway sealing fittings at the following points:

1. Where conduits pass from warm to cold locations, such as boundaries of refrigerated spaces.
2. Where otherwise required by NFPA 70.

P. Stub-up Connections: Extend conduits through concrete floor for connection to freestanding equipment. Install with an adjustable top or coupling threaded inside for plugs set flush with finished floor. Extend conductors to equipment with rigid steel conduit; FMC may be used 6 inches above the floor. Install screwdriver-operated, threaded plugs flush with floor for future equipment connections.

Q. Flexible Connections: Use maximum of 72 inches of flexible conduit for recessed and semirecessed lighting fixtures; for equipment subject to vibration, noise transmission, or movement; and for all motors. Use LFMC in damp or wet locations. Install separate ground conductor across flexible connections.

R. Surface Raceways: Install a separate, green, ground conductor in raceways from junction box supplying raceways to receptacle or fixture ground terminals.

S. Set floor boxes level and flush with finished floor surface.

T. Install hinged-cover enclosures and cabinets plumb. Support at each corner.

3.3 PROTECTION

A. Provide final protection and maintain conditions that ensure coatings, finishes, and cabinets are without damage or deterioration at time of Substantial Completion.

1. Repair damage to galvanized finishes with zinc-rich paint recommended by manufacturer.
2. Repair damage to PVC or paint finishes with matching touchup coating recommended by manufacturer.

3.4 CLEANING

A. After completing installation of exposed, factory-finished raceways and boxes, inspect exposed finishes and repair damaged finishes.

END OF SECTION 16130

SECTION 16140
WIRING DEVICES

PART 1 - GENERAL

1.1 RELATED DOCUMENTS

A. Drawings and general provisions of the Contract, including General and Supplementary Conditions and Division 1 Specification Sections, apply to this Section.

1.2 SUMMARY

A. This Section includes the following:

1. Single and duplex receptacles, ground-fault circuit interrupters.
2. Single- and double-pole snap switches and dimmer switches.
3. Device wall plates.
4. Floor service outlets, and multioutlet assemblies.

1.3 DEFINITIONS

A. EMI: Electromagnetic interference.

B. GFCI: Ground-fault circuit interrupter.

C. PVC: Polyvinyl chloride.

D. RFI: Radio-frequency interference.

1.4 SUBMITTALS

A. Product Data: For each type of product indicated.

B. Shop Drawings: List of legends and description of materials and process used for premarking wall plates.

C. Field quality-control test reports.

1.5 QUALITY ASSURANCE

A. Source Limitations: Obtain each type of wiring device through one source from a single manufacturer.

B. Electrical Components, Devices, and Accessories: Listed and labeled as defined in NFPA 70, Article 100, by a testing agency acceptable to authorities having jurisdiction, and marked for intended use.

C. Comply with NFPA 70.

1.6 COORDINATION

A. Receptacles for Owner-Furnished Equipment: Match plug configurations.

1. Cord and Plug Sets: Match equipment requirements.

PART 2 - PRODUCTS

2.1 MANUFACTURERS

A. Manufacturers: Subject to compliance with requirements, provide products by one of the following:

1. Wiring Devices:

a. Hubbell Incorporated; Wiring Device-Kellems.
b. Leviton Mfg. Company Inc.
c. Pass & Seymour/Legrand; Wiring Devices Div.
d. Incandescent Dimmers: Lutron Nova-T series.

2. Wiring Devices for Hazardous (Classified) Locations:

a. Crouse-Hinds/Cooper Industries, Inc.; Arrow Hart Wiring Devices.
b. EGS/Appleton Electric Company.
c. Killark Electric Manufacturing Co./Hubbell Incorporated.

3. Multioutlet Assemblies:

a. Hubbell Incorporated; Wiring Device-Kellems.
b. Wiremold Company (The).

2.2 STRAIGHT BLADE RECEPTACLES

A. Convenience Receptacles, 125 V, 20 A: Comply with NEMA WD 1, NEMA WD 6 configuration 5-20R, and UL 498.

1. Products: Subject to compliance with requirements, provide one of the following:

a. Cooper; 5351 (single), 5352 (duplex).
b. Hubbell; HBL5351 (single), CR5352 (duplex).
c. Leviton; 5891 (single), 5352 (duplex).
d. Pass & Seymour; 5381 (single), 5352 (duplex).

2.3 GFCI RECEPTACLES

A. General Description: Straight blade, [non-feed]-through type. Comply with NEMA WD 1, NEMA WD 6, UL 498, and UL 943, Class A, and include indicator light that is lighted when device is tripped.

B. Duplex GFCI Convenience Receptacles, 125 V, 20 A:

1. Products: Subject to compliance with requirements, provide one of the following:

a. Cooper; GF20.
b. Pass & Seymour; 2084.
c. Hubbell
d. Leviton

2.4 SWITCHES

A. Single- and Double-Pole Switches: Comply with DSCC W-C-896F and UL 20.

B. Snap Switches: Heavy-Duty grade, quiet type.

C. Keyed Switches: Provide real-key type switches.

D. Combination Switch and Receptacle: Both devices in a single gang unit with plaster ears and removable tab connector that permit separate or common feed connection.

1. Switch: 20 A, 120/277-V ac.
2. Receptacle: NEMA WD 6, Configuration 5-20R.

2.5 WALL PLATES

A. Single and combination types to match corresponding wiring devices.

1. Plate-Securing Screws: Metal with head color to match plate finish.
2. Material for Finished Spaces: satin-finished stainless steel, 0.04-inch- thick.
3. Material for Unfinished Spaces: Galvanized steel.
4. Material for Wet Locations: Cast aluminum with spring-loaded lift cover, and listed and labeled for use in "wet locations."

2.6 MULTIOUTLET ASSEMBLIES

A. Components of Assemblies: Products from a single manufacturer designed for use as a complete, matching assembly of raceways and receptacles.

B. Raceway Material: Metal, with manufacturer's off-white standard finish.

C. Wire: No. 12 AWG.

2.7 FINISHES

A. Color:

1. Wiring Devices Connected to Normal Power System: White for new construction, unless otherwise indicated or required by NFPA 70.
2. Wiring Devices Connected to Normal Power System: Provide devices with color matching existing for renovated areas and for contiguous new additions, unless otherwise indicated or required by NFPA 70.

3. Wiring Devices Connected to Emergency Power System: Red.

PART 3 - EXECUTION

3.1 INSTALLATION

A. Install devices and assemblies level, plumb, and square with building lines.

B. Install wall dimmers to achieve indicated rating after derating for ganging according to manufacturer's written instructions.

C. Install unshared neutral conductors on line and load side of dimmers according to manufacturers' written instructions.

D. Arrangement of Devices: Unless otherwise indicated, mount flush, with long dimension vertical, and with grounding terminal of receptacles on bottom. Group adjacent switches under single, multigang wall plates.

E. Remove wall plates and protect devices and assemblies during painting.

F. Adjust locations of floor service outlets and service poles to suit arrangement of partitions and furnishings.

3.2 IDENTIFICATION

A. Comply with Division 16 Section Electrical Identification.

1. Receptacles: Identify panelboard and circuit number from which served. Use hot, stamped or engraved machine printing with black-filled lettering on face of plate, and durable wire markers or tags inside outlet boxes.

3.3 CONNECTIONS

A. Ground equipment according to Division 16 Section "Grounding and Bonding."

B. Connect wiring according to Division 16 Section "Conductors and Cables."

C. Tighten electrical connectors and terminals according to manufacturer's published torque-tightening values. If manufacturer's torque values are not indicated, use those specified in UL 486A and UL 486B.

3.4 FIELD QUALITY CONTROL

A. Perform the following field tests and inspections and prepare test reports:

1. After installing wiring devices and after electrical circuitry has been energized, test for proper polarity, ground continuity, and compliance with requirements.
2. Test GFCI operation with both local and remote fault simulations according to manufacturer's written instructions.

B. Remove malfunctioning units, replace with new units, and retest as specified above.

END OF SECTION 16140

SECTION 16145
LIGHTING CONTROL DEVICES

PART 1 - GENERAL

1.1 RELATED DOCUMENTS

A. Drawings and general provisions of the Contract, including General and Supplementary Conditions and Division 1 Specification Sections, apply to this Section.

1.2 SUMMARY

A. This Section includes the following lighting control devices:

1. Outdoor photoelectric switches.
2. Switch-box occupancy sensors.
3. Indoor occupancy sensors.
4. Multipole contactors.

B. Related Sections include the following:

1. Division 13 Section "Lighting Controls" for low-voltage, manual and programmable lighting control systems.
2. Division 16 Section "Wiring Devices" for wall-box dimmers and manual light switches.

1.3 DEFINITIONS

A. LED: Light-emitting diode.

B. PIR: Passive infrared.

1.4 SUBMITTALS

A. Product Data: For each type of product indicated.

B. Shop Drawings: Show installation details for occupancy and light-level sensors.

1. Lighting plan showing location, orientation, and coverage area of each sensor.
2. Interconnection diagrams showing field-installed wiring.

C. Field quality-control test reports.

D. Operation and Maintenance Data: For each type of product to include in emergency, operation, and maintenance manuals.

1.5 QUALITY ASSURANCE

A. Electrical Components, Devices, and Accessories: Listed and labeled as defined in NFPA 70, Article 100, by a testing agency acceptable to authorities having jurisdiction, and marked for intended use.

1.6 COORDINATION

A. Coordinate layout and installation of ceiling-mounted devices with other construction that penetrates ceilings or is supported by them, including light fixtures, HVAC equipment, fire-suppression system, and partition assemblies.

PART 2 - PRODUCTS

2.1 MANUFACTURERS

A. In other Part 2 articles where titles below introduce lists, the following requirements apply to product selection:

1. Manufacturers: Subject to compliance with requirements, provide products by one of the manufacturers specified.

2.2 GENERAL LIGHTING CONTROL DEVICE REQUIREMENTS

A. Line-Voltage Surge Protection: An integral part of the devices for 120- and 277-V solid-state equipment. For devices without integral line-voltage surge protection, field-mounting surge protection shall comply with IEEE C62.41 and with UL 1449.

2.3 OUTDOOR PHOTOELECTRIC SWITCHES

A. Manufacturers:

1. Intermatic, Inc.
2. Paragon Electric Co.
3. TORK.
4. Touchplate Technologies, Inc.
5. Watt Stopper (The).

B. Description: Solid state, with SPST dry contacts rated for 1800-VA tungsten or 1000-VA inductive, to operate connected relay, contactor coils, microprocessor input, and complying with UL 773A.

1. Light-Level Monitoring Range: 1.5 to 10 fc, with an adjustment for turn-on and turn-off levels within that range, and a directional lens in front of photocell to prevent fixed light sources from causing turn-off.
2. Time Delay: 15-second minimum, to prevent false operation.
3. Surge Protection: Metal-oxide varistor type, complying with IEEE C62.41 for Category A1 locations.
4. Mounting: Twist lock complying with IEEE C136.10, with base-and-stem mounting or stem-and-swivel mounting accessories as required to direct sensor to the North sky exposure.

2.4 SWITCH-BOX OCCUPANCY SENSORS

A. Manufacturers:

1. Leviton Mfg. Company Inc. (Base bid)
2. Watt Stopper (The). (Alternate bid)

B. Description: PIR type with integral power-switching contacts rated for 20A at 120-V ac, suitable for incandescent light fixtures, flourescent light fixtures with magnetic or electronic ballasts, or 1/6-hp motors; and rated for 20A at 277-V ac, suitable for incandescent light fixtures, flourescent light fixtures with magnetic or electronic ballasts, or 1/3-hp motors, minimum.

1. Include ground wire.
2. Automatic Light-Level Sensor: Adjustable from 2 to 200 fc; keeps lighting off when selected lighting level is present.

2.5 INDOOR OCCUPANCY SENSORS

A. Manufacturers:

1. Leviton Mfg. Company Inc. (Base bid)
2. Watt Stopper (The). (Alternate bid)

B. General Description: Wall- or ceiling-mounting, solid-state units with a separate relay unit.

1. Operation: Unless otherwise indicated, turn lights on when covered area is occupied and off when unoccupied; with a time delay for turning lights off, adjustable over a minimum range of 1 to 15 minutes.
2. Sensor Output: Contacts rated to operate the connected relay, complying with UL 773A. Sensor shall be powered from the relay unit.
3. Relay Unit: Dry contacts rated for 20-A ballast load at 120- and 277-V ac, for 13-A tungsten at 120-V ac, and for 1 hp at 120-V ac. Power supply to sensor shall be 24-V dc, 150-mA, Class 2 power source as defined by NFPA 70.
4. Mounting:

    a. Sensor: Suitable for mounting in any position on a standard outlet box.
    b. Relay: Externally mounted though a 1/2-inch knockout in a standard electrical enclosure.

c. Time-Delay and Sensitivity Adjustments: Recessed and concealed behind hinged door.

5. Indicator: LED, to show when motion is being detected during testing and normal operation of the sensor.
6. Bypass Switch: Override the on function in case of sensor failure.
7. Automatic Light-Level Sensor: Adjustable from 2 to 200 fc; keeps lighting off when selected lighting level is present.

C. PIR Type: Ceiling mounting; detect occupancy by sensing a combination of heat and movement in area of coverage.

1. Detector Sensitivity: Detect occurrences of 6-inch minimum movement of any portion of a human body that presents a target of at least 36 sq. in..
2. Detection Coverage (Room): Detect occupancy anywhere in a circular area of 1000 sq. ft. when mounted on a 112-inch- high ceiling.
3. Detection Coverage (Corridor): Detect occupancy within 90 feet when mounted on a 10-foot- high ceiling.

D. Ultrasonic Type: Ceiling mounting; detect occupancy by sensing a change in pattern of reflected ultrasonic energy in area of coverage.

1. Detector Sensitivity: Detect a person of average size and weight moving at least 12 inches in either a horizontal or a vertical manner at an approximate speed of 12 inches/s.
2. Detection Coverage (Small Room): Detect occupancy anywhere within a circular area of 600 sq. ft. when mounted on a 112-inch- high ceiling.
3. Detection Coverage (Standard Room): Detect occupancy anywhere within a circular area of 1000 sq. ft. when mounted on an 112-inch - high ceiling.
4. Detection Coverage (Large Room): Detect occupancy anywhere within a circular area of 2000 sq. ft. when mounted on a 112-inch - high ceiling.
5. Detection Coverage (Corridor): Detect occupancy anywhere within 90 feet when mounted on a 10-foot- high ceiling in a corridor not wider than 14 feet.

E. Dual-Technology Type: Ceiling mounting; detect occupancy by using a combination of PIR and ultrasonic detection methods in area of coverage. Particular technology or combination of technologies that controls on and off functions shall be selectable in the field by operating controls on unit.

1. Sensitivity Adjustment: Separate for each sensing technology.
2. Detector Sensitivity: Detect occurrences of 6-inch minimum movement of any portion of a human body that presents a target of at least 36 sq. in., and detect a person of average size and weight moving at least 12 inches in either a horizontal or a vertical manner at an approximate speed of 12 inches/s.
3. Detection Coverage (Standard Room): Detect occupancy anywhere within a circular area of 1000 sq. ft. when mounted on a 112-inch - high ceiling.

2.6 MULTIPOLE CONTACTORS

A. Manufacturers:

1. Allen-Bradley/Rockwell Automation.
2. ASCO Power Technologies, LP; a division of Emerson Electric Co.
3. Cutler-Hammer; Eaton Corporation.
4. GE Industrial Systems; Total Lighting Control.
5. Square-D.

B. Description: Electrically operated and mechanically or electrically held as indicated, complying with NEMA ICS 2 and UL 508.

1. Current Rating for Switching: Listing or rating consistent with type of load served, including tungsten filament, inductive, and high-inrush ballast (ballast with 15 percent or less total harmonic distortion of normal load current).
2. Control-Coil Voltage: Match control power source.

2.7 CONDUCTORS AND CABLES

A. Power Wiring to Supply Side of Remote-Control Power Sources: Not smaller than No. 12 AWG, complying with Division 16 "Section Conductors and Cables."

B. Classes 2 and 3 Control Cable: Multiconductor cable with stranded copper conductors not smaller than No. [18] AWG, complying with Division 16 Section "Conductors and Cables."

C. Class 1 Control Cable: Multiconductor cable with stranded copper conductors not smaller than No. [14] AWG, complying with Division 16 Section "Conductors and Cables."

D. Install unshielded, twisted-pair cable for control and signal transmission conductors, complying with Division 16 Section "Voice and Data Communication Cabling."

PART 3 - EXECUTION

3.1 SENSOR INSTALLATION

A. Install and aim sensors in locations to achieve at least 90 percent coverage of areas indicated. Do not exceed coverage limits specified in manufacturer's written instructions.

3.2 WIRING INSTALLATION

A. Wiring Method: Comply with Division 16 Section "Conductors and Cables." Minimum conduit size shall be 1/2 inch.

B. Wiring within Enclosures: Bundle, lace, and train conductors to terminal points. Separate power-limited and nonpower-limited conductors according to conductor manufacturer's written instructions.

C. Install field-mounting transient voltage suppressors for lighting control devices in Category A locations that do not have integral line-voltage surge protection.

D. Size conductors according to lighting control device manufacturer's written instructions, unless otherwise indicated.

E. Splices, Taps, and Terminations: Make connections only on numbered terminal strips in junction, pull, and outlet boxes; terminal cabinets; and equipment enclosures.

F. Tighten electrical connectors and terminals according to manufacturer's published torque-tightening values. If manufacturer's torque values are not indicated, use those specified in UL 486A and UL 486B.

3.3 IDENTIFICATION

A. Identify components and power and control wiring according to Division 16 Section "Electrical Identification."

B. Label time switches and contactors with a unique designation.

3.4 FIELD QUALITY CONTROL

A. Perform the following field tests and inspections and prepare test reports:

1. After installing time switches and sensors, and after electrical circuitry has been energized, adjust and test for compliance with requirements.
2. Operational Test: Verify actuation of each sensor and adjust time delays.

B. Remove and replace lighting control devices where test results indicate that they do not comply with specified requirements.

C. Additional testing and inspecting, at Contractor's expense, will be performed to determine compliance of replaced or additional work with specified requirements.

3.5 ADJUSTING

A. Occupancy Adjustments: When requested within 12 months of date of Substantial Completion, provide on-site assistance in adjusting sensors to suit actual occupied conditions. Provide up to two visits to site outside normal occupancy hours for this purpose.

END OF SECTION 16145

SECTION 16289
TRANSIENT VOLTAGE SUPPRESSION

PART 1 - GENERAL

1.1 RELATED DOCUMENTS

A. Drawings and general provisions of the Contract, including General and Supplementary Conditions and Division 1 Specification Sections, apply to this Section.

1.2 SUMMARY

A. This Section includes TVSSs for low-voltage power, control, and communication equipment.

B. Related Sections include the following:

1. Division 16 Section "Switchboards" for factory-installed TVSSs.
2. Division 16 Section "Panelboards" for factory-installed TVSSs.

1.3 DEFINITIONS

A. SVR: Suppressed voltage rating.

B. TVSS: Transient voltage surge suppressor.

1.4 SUBMITTALS

A. Product Data: For each type of product indicated. Include rated capacities, operating weights, operating characteristics, furnished specialties, and accessories.

B. Operation and Maintenance Data: For transient voltage suppression devices to include in emergency, operation, and maintenance manuals.

C. Warranties: Special warranties specified in this Section.

1.5 QUALITY ASSURANCE

A. Source Limitations: Obtain suppression devices and accessories through one source from a single manufacturer.

B. Product Options: Drawings indicate size, dimensional requirements, and electrical performance of suppressors and are based on the specific system indicated. Refer to Division 1 Section "Product Requirements."

C. Electrical Components, Devices, and Accessories: Listed and labeled as defined in NFPA 70, Article 100, by a testing agency acceptable to authorities having jurisdiction, and marked for intended use.

D. Comply with IEEE C62.41, "IEEE Guide for Surge Voltages in Low Voltage AC Power Circuits," and test devices according to IEEE C62.45, "IEEE Guide on Surge Testing for Equipment Connected to Low-Voltage AC Power Circuits."

E. Comply with NEMA LS 1, "Low Voltage Surge Protection Devices."

F. Comply with UL 1283, "Electromagnetic Interference Filters," and UL 1449, "Transient Voltage Surge Suppressors."

1.6 PROJECT CONDITIONS

A. Service Conditions: Rate surge protection devices for continuous operation under the following conditions, unless otherwise indicated:

1. Maximum Continuous Operating Voltage: Not less than 115 percent of nominal system operating voltage.
2. Operating Temperature: 30 to 120 deg F.
3. Humidity: 0 to 85 percent, noncondensing.
4. Altitude: Less than 20,000 feet above sea level.

1.7 WARRANTY

A. Special Warranty: Manufacturer's standard form in which manufacturer agrees to repair or replace components of surge suppressors that fail in materials or workmanship within five years from date of Substantial Completion.

PART 2 - PRODUCTS

2.1 MANUFACTURERS

A. Manufacturers: Subject to compliance with requirements, provide products by one of the following:

1. Cutler-Hammer, Inc.; Eaton Corporation.
2. General Electric Company.
3. Siemens Energy & Automation, Inc.
4. Square D; Schneider Electric.

2.2 SERVICE ENTRANCE SUPPRESSORS

A. Surge Protection Device Description: Modular design with field-replaceable modules, sine-wave-tracking type with the following features and accessories:

1. Fuses, rated at 200-kA interrupting capacity.
2. Fabrication using bolted compression lugs for internal wiring.
3. Integral disconnect switch.
4. Arrangement with copper bus bars and for bolted connections to phase buses, neutral bus, and ground bus.
5. LED indicator lights for power and protection status.
6. Audible alarm, with silencing switch, to indicate when protection has failed.
7. One set of dry contacts rated at 5 A and 250-V ac, for remote monitoring of protection status. Coordinate with building power monitoring and control system.
8. Surge-event operations counter.

B. Peak Single-Impulse Surge Current Rating: See panelboard schedules.

C. Connection Means: Permanently wired.

D. Protection modes and UL 1449 SVR for grounded wye circuits with voltages of 480Y/277 and 208Y/120, 3-phase, 4-wire circuits shall be as follows:

1. Line to Neutral: 800 V for 480Y/277 and 400 V for 208Y/120.
2. Line to Ground: 800 V for 480Y/277 and 400 V for 208Y/120.
3. Neutral to Ground: 800 V for 480Y/277 and 400 V for 208Y/120.

2.3 PANELBOARD SUPPRESSORS

A. Surge Protection Device Description: Modular design with field-replaceable modules, sign-wave-tracking type with the following features and accessories:

1. Fuses, rated at 200-kA interrupting capacity.
2. Fabrication using bolted compression lugs for internal wiring.
3. Integral disconnect switch.
4. Arrangement with wire connections to phase buses, neutral bus, and ground bus.
5. LED indicator lights for power and protection status.
6. Audible alarm, with silencing switch, to indicate when protection has failed.
7. One set of dry contacts rated at 5 A and 250-V, ac, for remote monitoring of protection status. Coordinate with building power monitoring and control system.
8. Surge-event operations counter.

B. Peak Single-Impulse Surge Current Rating: See panelboard schedules.

C. Protection modes and UL 1449 SVR for grounded wye circuits with voltages of 480Y/277 and 208Y/120, 3-phase, 4-wire circuits shall be as follows:

1. Line to Neutral: 800 V for 480Y/277 and 400 V for 208Y/120.
2. Line to Ground: 800 V for 480Y/277 and 400 V for 208Y/120.
3. Neutral to Ground: 800 V for 480Y/277 and 400 V for 208Y/120.

2.4 SUPPRESSORS FOR ELECTRONIC-GRADE PANELBOARDS

A. Surge Protection Device Description: Sine-wave-tracking type, panel-mounted design with the following features and accessories:

1. LED indicator lights for power and protection status.
2. Audible alarm, with silencing switch, to indicate when protection has failed.
3. One set of dry contacts rated at 5 A and 250-V ac, for remote monitoring of protection status.
4. Arrangement with wire connections to phase buses, neutral bus, and ground bus.

B. Peak Single-Impulse Surge Current Rating: See panelboard schedules.

C. Protection modes and UL 1449 SVR for grounded wye circuits with voltages of 480Y/277 and 208Y/120, 3-phase, 4-wire circuits shall be as follows:

1. Line to Neutral: 800 V for 480Y/277 and 400 V for 208Y/120.
2. Line to Ground: 800 V for 480Y/277 and 400 V for 208Y/120.
3. Neutral to Ground: 800 V for 480Y/277 and 400 V for 208Y/120.

2.5 ENCLOSURES

A. NEMA 250, with type matching the enclosure of panel or device being protected.

PART 3 - EXECUTION

3.1 INSTALLATION OF SURGE PROTECTION DEVICES

A. Install devices at service entrance on load side, with ground lead bonded to service entrance ground.

B. Install devices for panelboard and auxiliary panels with conductors or buses between suppressor and points of attachment as short and straight as possible. Do not exceed manufacturer's recommended lead length. Do not bond neutral and ground.

1. Provide multipole, 30, 60, 100-A circuit breaker as a dedicated disconnect for suppressor, unless otherwise indicated.

3.2 PLACING SYSTEM INTO SERVICE

A. Do not energize or connect service entrance equipment and panelboards to their sources until surge protection devices are installed and connected.

3.3 FIELD QUALITY CONTROL

A. Manufacturer's Field Service: Engage a factory-authorized service representative to inspect, test, and adjust equipment installation, including connections, and to assist in field testing. Report results in writing.

1. Verify that electrical wiring installation complies with manufacturer's written installation requirements.

3.4 DEMONSTRATION

A. Engage a factory-authorized service representative to train Owner's maintenance personnel to adjust, operate, and maintain transient voltage suppression devices. Refer to Division 1 Section "Closeout Procedures & Demonstration and Training."

END OF SECTION 16289

Kingscott Associates, Inc.
Architects/Engineers
Kalamazoo, Michigan

SECTION 16410
ENCLOSED SWITCHES AND CIRCUIT BREAKERS

PART 1 - GENERAL

1.1 RELATED DOCUMENTS

A. Drawings and general provisions of the Contract, including General and Supplementary Conditions and other Division 1 Specification Sections, apply to this Section.

1.2 SUMMARY

A. This Section includes the following individually mounted, enclosed switches and circuit breakers:

1. Fusible switches.
2. Nonfusible switches.
3. Molded-case circuit switches.
4. Molded-case switches.
5. Enclosures.

1.3 DEFINITIONS

A. GD: General duty.

B. GFCI: Ground-fault circuit interrupter.

C. HD: Heavy duty.

D. RMS: Root mean square.

E. SPDT: Single pole, double throw.

1.4 SUBMITTALS

A. Product Data: For each type of enclosed switch, circuit breaker, accessory, and component indicated. Include dimensioned elevations, sections, weights, and manufacturers' technical data on features, performance, electrical characteristics, ratings, and finishes.

1. Enclosure types and details for types other than NEMA 250, Type 1.
2. Current and voltage ratings.

3. Short-circuit current rating.
4. UL listing for series rating of installed devices.
5. Features, characteristics, ratings, and factory settings of individual overcurrent protective devices and auxiliary components.

B. Shop Drawings: Diagram power, signal, and control wiring.

C. Qualification Data: For testing agency.

D. Field quality-control test reports including the following:

1. Test procedures used.
2. Test results that comply with requirements.
3. Results of failed tests and corrective action taken to achieve test results that comply with requirements.

E. Operation and Maintenance Data: For enclosed switches and circuit breakers to include in emergency, operation, and maintenance manuals. In addition to items specified in Division 1 Section "Closeout Procedures," include the following:

1. Manufacturer's written instructions for testing and adjusting enclosed switches and circuit breakers.
2. Time-current curves, including selectable ranges for each type of circuit breaker.

1.5 QUALITY ASSURANCE

A. Testing Agency Qualifications: An independent agency, with the experience and capability to conduct the testing indicated, that is a member company of the InterNational Electrical Testing Association or is a nationally recognized testing laboratory (NRTL) as defined by OSHA in 29 CFR 1910.7, and that is acceptable to authorities having jurisdiction.

B. Electrical Components, Devices, and Accessories: Listed and labeled as defined in NFPA 70, Article 100, by a testing agency acceptable to authorities having jurisdiction, and marked for intended use.

C. Comply with NFPA 70.

D. Product Selection for Restricted Space: Drawings indicate maximum dimensions for enclosed switches and circuit breakers, including clearances between enclosures, and adjacent surfaces and other items. Comply with indicated maximum dimensions.

1.6 PROJECT CONDITIONS

A. Environmental Limitations: Rate equipment for continuous operation under the following conditions, unless otherwise indicated:

1. Ambient Temperature: Not less than minus 22 deg F and not exceeding 104 deg F.
2. Altitude: Not exceeding 6600 feet.

1.7 COORDINATION

A. Coordinate layout and installation of switches, circuit breakers, and components with other construction, including conduit, piping, equipment, and adjacent surfaces. Maintain required workspace clearances and required clearances for equipment access doors and panels.

PART 2 - PRODUCTS

2.1 MANUFACTURERS

A. In other Part 2 articles where titles below introduce lists, the following requirements apply to product selection:

1. Manufacturers: Subject to compliance with requirements, provide products by one of the manufacturers specified.

2.2 FUSIBLE AND NONFUSIBLE SWITCHES

A. Manufacturers:
1. General Electric Co.; Electrical Distribution & Control Division.
2. Square D/Group Schneider.

B. Fusible Switch, 1200 A and Smaller: NEMA KS 1, Type HD, with clips or bolt pads to accommodate specified fuses, lockable handle with capability to accept two padlocks, and interlocked with cover in closed position.

C. Nonfusible Switch, 1200 A and Smaller: NEMA KS 1, Type HD, lockable handle with capability to accept two padlocks, and interlocked with cover in closed position.

D. Accessories:

1. Equipment Ground Kit: Internally mounted and labeled for copper and aluminum ground conductors.
2. Neutral Kit: Internally mounted; insulated, capable of being grounded, and bonded; and labeled for copper and aluminum neutral conductors.

2.3 MOLDED-CASE CIRCUIT BREAKERS AND SWITCHES

A. Manufacturers:
1. General Electric Co.; Electrical Distribution & Control Division.
2. Square D/Group Schneider.

B. Molded-Case Circuit Breaker: NEMA AB 1, with interrupting capacity to meet available fault currents.

1. Thermal-Magnetic Circuit Breakers: Inverse time-current element for low-level overloads and instantaneous magnetic trip element for short circuits. Adjustable magnetic trip setting for circuit-breaker frame sizes 250 A and larger.

2. Adjustable Instantaneous-Trip Circuit Breakers: Magnetic trip element with front-mounted, field-adjustable trip setting.
3. Electronic Trip-Unit Circuit Breakers: RMS sensing; field-replaceable rating plug; with the following field-adjustable settings:

    a. Instantaneous trip.
    b. Long- and short-time pickup levels.
    c. Long- and short-time time adjustments.
    d. Ground-fault pickup level, time delay, and I^2t response.

4. Current-Limiting Circuit Breakers: Frame sizes 400 A and smaller and let-through ratings less than NEMA FU 1, RK-5.
5. Integrally Fused Circuit Breakers: Thermal-magnetic trip element with integral limiter-style fuse listed for use with circuit breaker and trip activation on fuse opening or on opening of fuse compartment door.
6. GFCI Circuit Breakers: Single- and two-pole configurations with **[5]** **[30]**-mA trip sensitivity.

C. Molded-Case Circuit-Breaker Features and Accessories:

1. Standard frame sizes, trip ratings, and number of poles.
2. Lugs: Mechanical style with compression lug kits suitable for number, size, trip ratings, and conductor material.
3. Application Listing: Type SWD for switching fluorescent lighting loads; Type HACR for heating, air-conditioning, and refrigerating equipment.
4. Communication Capability: Circuit-breaker.
5. Key Interlock Kit: Externally mounted to prohibit circuit-breaker operation; key shall be removable only when circuit breaker is in off position.

D. Molded-Case Switches: Molded-case circuit breaker with fixed, high-set instantaneous trip only, and short-circuit withstand rating equal to equivalent breaker frame size interrupting rating.

E. Molded-Case Switch Accessories:

1. Lugs: Mechanical style with compression lug kits suitable for number, size, trip ratings, and material of conductors.
2. Application Listing: Type HACR for heating, air-conditioning, and refrigerating equipment.
3. Key Interlock Kit: Externally mounted to prohibit operation; key shall be removable only when switch is in off position.

2.4 ENCLOSURES

A. NEMA AB 1 and NEMA KS 1 to meet environmental conditions of installed location.

1. Outdoor Locations: NEMA 250, Type 3R.
2. Kitchen Areas: NEMA 250, Type 4X, stainless steel.
3. Other Wet or Damp Indoor Locations: NEMA 250, Type 4.
4. Hazardous Areas Indicated on Drawings: NEMA 250, Type 7C.

PART 3 - EXECUTION

3.1 EXAMINATION

A. Examine elements and surfaces to receive enclosed switches and circuit breakers for compliance with installation tolerances and other conditions affecting performance.

B. Proceed with installation only after unsatisfactory conditions have been corrected.

3.2 INSTALLATION

A. Comply with applicable portions of NECA 1, NEMA PB 1.1, and NEMA PB 2.1 for installation of enclosed switches and circuit breakers.

B. Mount individual wall-mounting switches and circuit breakers with tops at uniform height, unless otherwise indicated. Anchor floor-mounting switches to concrete base.

C. Temporary Lifting Provisions: Remove temporary lifting eyes, channels, and brackets and temporary blocking of moving parts from enclosures and components.

3.3 IDENTIFICATION

A. Identify field-installed conductors, interconnecting wiring, and components; provide warning signs as specified in Division 16 Section Electrical Identification.

B. Enclosure Nameplates: Label each enclosure with engraved metal or laminated-plastic nameplate as specified in Division 16 Section Electrical Identification.

3.4 FIELD QUALITY CONTROL

A. Prepare for acceptance testing as follows:

1. Inspect mechanical and electrical connections.
2. Verify switch and relay type and labeling verification.
3. Verify rating of installed fuses.

B. Testing Agency: Engage a qualified testing and inspecting agency to perform the following field tests and inspections and prepare test reports:

C. Perform the following field tests and inspections and prepare test reports:

1. Perform each electrical test and visual and mechanical inspection stated in NETA ATS, Section 7.5 for switches and Section 7.6 for molded-case circuit breakers. Certify compliance with test parameters.
2. Correct malfunctioning units on-site, where possible, and retest to demonstrate compliance; otherwise, replace with new units and retest.
3. Infrared Scanning:

a. Initial Infrared Scanning: After Substantial Completion, but not more than 60 days after Final Acceptance, perform an infrared scan of each enclosed switch and circuit breaker. Open or remove doors or panels so connections are accessible to portable scanner.
b. Follow-Up Infrared Scanning: Perform an additional follow-up infrared scan of each unit 11 months after date of Substantial Completion.
c. Instruments, Equipment and Reports:

    1) Use an infrared scanning device designed to measure temperature or to detect significant deviations from normal values. Provide calibration record for device.
    2) Prepare a certified report that identifies enclosed switches and circuit breakers included and describes scanning results. Include notation of deficiencies detected, remedial action taken, and observations after remedial action.

3.5 ADJUSTING

A. Set field-adjustable switches and circuit-breaker trip ranges.

3.6 CLEANING

A. On completion of installation, vacuum dirt and debris from interiors; do not use compressed air to assist in cleaning.

B. Inspect exposed surfaces and repair damaged finishes.

END OF SECTION 16410

SECTION 16420
ENCLOSED CONTROLLERS

PART 1 - GENERAL

1.1 RELATED DOCUMENTS

A. Drawings and general provisions of the Contract, including General and Supplementary Conditions and Division 1 Specification Sections, apply to this Section.

1.2 SUMMARY

A. This Section includes ac, enclosed controllers rated 600 V and less, of the following types:

1. Across-the-line, manual and magnetic controllers.

B. Related Sections include the following:

1. Division 16 Section "Transient Voltage Suppression" for low-voltage power, control, and communication surge suppressors.

1.3 SUBMITTALS

A. Product Data: For each type of enclosed controller. Include dimensions and manufacturer's technical data on features, performance, electrical characteristics, ratings, and finishes.

B. Manufacturer Seismic Qualification Certification: Submit certification that enclosed controllers, accessories, and components will withstand seismic forces defined in Division 16 Section "Electrical Supports and Seismic Restraints." Include the following:

1. Basis for Certification: Indicate whether withstand certification is based on actual test of assembled components or on calculation.

a. The term "withstand" means "the unit will remain in place without separation of any parts from the device when subjected to the seismic forces specified."
b. The term "withstand" means "the unit will remain in place without separation of any parts from the device when subjected to the seismic forces specified and the unit will be fully operational after the seismic event."

2. Dimensioned Outline Drawings of Equipment Unit: Identify center of gravity and locate and describe mounting and anchorage provisions.

3. Detailed description of equipment anchorage devices on which the certification is based and their installation requirements.

C. Field quality-control test reports.

D. Operation and Maintenance Data: For enclosed controllers to include in emergency, operation, and maintenance manuals. In addition to items specified in Division 1 Section "Operation and Maintenance Data," include the following:

1. Routine maintenance requirements for enclosed controllers and all installed components.
2. Manufacturer's written instructions for testing and adjusting overcurrent protective devices.

E. Load-Current and List of Settings of Adjustable Overload Relays: Compile after motors have been installed and arrange to demonstrate that dip switch settings for motor running overload protection suit actual motor to be protected.

1.4 QUALITY ASSURANCE

A. Manufacturer Qualifications: A qualified manufacturer. Maintain, within 100 miles of Project site, a service center capable of providing training, parts, and emergency maintenance and repairs.

B. Source Limitations: Obtain enclosed controllers of a single type through one source from a single manufacturer.

C. Electrical Components, Devices, and Accessories: Listed and labeled as defined in NFPA 70, Article 100, by a testing agency acceptable to authorities having jurisdiction, and marked for intended use.

D. Comply with NFPA 70.

E. Product Selection for Restricted Space: Drawings indicate maximum dimensions for enclosed controllers, minimum clearances between enclosed controllers, and for adjacent surfaces and other items. Comply with indicated maximum dimensions and clearances.

1.5 DELIVERY, STORAGE, AND HANDLING

A. Store enclosed controllers indoors in clean, dry space with uniform temperature to prevent condensation. Protect enclosed controllers from exposure to dirt, fumes, water, corrosive substances, and physical damage.

B. If stored in areas subject to weather, cover enclosed controllers to protect them from weather, dirt, dust, corrosive substances, and physical damage. Remove loose packing and flammable materials from inside controllers; install electric heating of sufficient wattage to prevent condensation.

1.6 COORDINATION

A. Coordinate layout and installation of enclosed controllers with other construction including conduit, piping, equipment, and adjacent surfaces. Maintain required workspace clearances and required clearances for equipment access doors and panels.

B. Coordinate installation of roof curbs, equipment supports, and roof penetrations. These items are specified in Division 7 Section "Roof Accessories."

C. Coordinate features of enclosed controllers and accessory devices with pilot devices and control circuits to which they connect.

D. Coordinate features, accessories, and functions of each enclosed controller with ratings and characteristics of supply circuit, motor, required control sequence, and duty cycle of motor and load.

PART 2 - PRODUCTS

2.1 MANUFACTURERS

A. Manufacturers: Subject to compliance with requirements, provide products by one of the following:

1. General Electrical Company; GE Industrial Systems.
2. Square D.

2.2 ACROSS-THE-LINE ENCLOSED CONTROLLERS

A. Manual Controller: NEMA ICS 2, general purpose, Class A, with "quick-make, quick-break" toggle or pushbutton action, and marked to show whether unit is "OFF," "ON," or "TRIPPED."

1. Overload Relay: Ambient-compensated type with inverse-time-current characteristics and NEMA ICS 2, Class 10 tripping characteristics. Relays shall have heaters and sensors in each phase, matched to nameplate, full-load current of specific motor to which they connect and shall have appropriate adjustment for duty cycle.

B. Magnetic Controller: NEMA ICS 2, Class A, full voltage, nonreversing, across the line, unless otherwise indicated.

1. Control Circuit: 120 V; obtained from [integral control power transformer] <Insert source of control power> with a control power [transformer] [source] of sufficient capacity to operate connected pilot, indicating and control devices, plus 100 percent spare capacity.
2. Adjustable Overload Relay: Dip switch selectable for motor running overload protection with NEMA ICS 2, Class [10] tripping characteristic, and selected to protect motor against voltage and current unbalance and single phasing. Provide relay with Class II ground-fault protection, with start and run delays to prevent nuisance trip on starting.

C. Combination Magnetic Controller: Factory-assembled combination controller and disconnect switch.

1. Circuit-Breaker Disconnecting Means: NEMA AB 1, motor-circuit protector with field-adjustable, short-circuit trip coordinated with motor locked-rotor amperes.

2.3 ENCLOSURES

A. Description: Flush- or surface-mounting cabinets as indicated. NEMA 250, Type 1, unless otherwise indicated to comply with environmental conditions at installed location.

1. Other Wet or Damp Indoor Locations: NEMA 250, Type 4.

2.4 ACCESSORIES

A. Devices shall be factory installed in controller enclosure, unless otherwise indicated.

B. Push-Button Stations, Pilot Lights, and Selector Switches: NEMA ICS 2, heavy-duty type.

C. Stop and Lockout Push-Button Station: Momentary-break, push-button station with a factory-applied hasp arranged so padlock can be used to lock push button in depressed position with control circuit open.

D. Phase-Failure and Undervoltage Relays: Solid-state sensing circuit with isolated output contacts for hard-wired connection. Provide adjustable undervoltage setting.

2.5 FACTORY FINISHES

A. Finish: Manufacturer's standard paint applied to factory-assembled and -tested enclosed controllers before shipping.

PART 3 - EXECUTION

3.1 EXAMINATION

A. Examine areas and surfaces to receive enclosed controllers for compliance with requirements, installation tolerances, and other conditions affecting performance.

1. Proceed with installation only after unsatisfactory conditions have been corrected.

3.2 INSTALLATION

A. For control equipment at walls, bolt units to wall or mount on lightweight structural-steel channels bolted to wall. For controllers not at walls, provide freestanding racks complying with Division 16 Section "Electrical Supports and Seismic Restraints."

B. Comply with mounting and anchoring requirements specified in Division 16 Section "Electrical Supports and Seismic Restraints."

3.3 IDENTIFICATION

A. Identify enclosed controller, components, and control wiring according to Division 16 Section "Electrical Identification."

3.4 CONTROL WIRING INSTALLATION

A. Install wiring between enclosed controllers according to Division 16 Section "Conductors and Cables."

B. Bundle, train, and support wiring in enclosures.

C. Connect hand-off-automatic switch and other automatic-control devices where applicable.

1. Connect selector switches to bypass only manual- and automatic-control devices that have no safety functions when switch is in hand position.
2. Connect selector switches with enclosed controller circuit in both hand and automatic positions for safety-type control devices such as low- and high-pressure cutouts, high-temperature cutouts, and motor overload protectors.

3.5 CONNECTIONS

A. Conduit installation requirements are specified in other Division 16 Sections. Drawings indicate general arrangement of conduit, fittings, and specialties.

B. Ground equipment according to Division 16 Section "Grounding and Bonding."

3.6 FIELD QUALITY CONTROL

A. Prepare for acceptance tests as follows:

1. Test insulation resistance for each enclosed controller element, bus, component, connecting supply, feeder, and control circuit.
2. Test continuity of each circuit.

B. Perform the following field tests and inspections and prepare test reports:

1. Perform each electrical test and visual and mechanical inspection, except optional tests, stated in NETA ATS, "Motor Control - Motor Starters." Certify compliance with test parameters.
2. Correct malfunctioning units on-site, where possible, and retest to demonstrate compliance; otherwise, replace with new units and retest.

3.7 ADJUSTING

A. Set field-adjustable switches and circuit-breaker trip ranges.

3.8 DEMONSTRATION

A. Engage a factory-authorized service representative to train Owner's maintenance personnel to adjust, operate, and maintain enclosed controllers. Refer to Division 1 Section "Demonstration and Training."

END OF SECTION 16420

SECTION 16442
PANELBOARDS

PART 1 - GENERAL

1.1 RELATED DOCUMENTS

A. Drawings and general provisions of the Contract, including General and Supplementary Conditions and Division 1 Specification Sections, apply to this Section.

1.2 SUMMARY

A. This Section includes the following:

1. Distribution panelboards.
2. Lighting and appliance branch-circuit panelboards.
3. Transient voltage suppression panelboards.

1.3 SUBMITTALS

A. Product Data: For each type of panelboard, overcurrent protective device, transient voltage suppression device, accessory, and component indicated. Include dimensions and manufacturers' technical data on features, performance, electrical characteristics, ratings, and finishes.

B. Shop Drawings: For each panelboard and related equipment.

1. Dimensioned plans, elevations, sections, and details. Show tabulations of installed devices, equipment features, and ratings. Include the following:

a. Enclosure types and details for types other than NEMA 250, Type 1.
b. Bus configuration, current, and voltage ratings.
c. Short-circuit current rating of panelboards and overcurrent protective devices.
d. UL listing for series rating of installed devices.
e. Features, characteristics, ratings, and factory settings of individual overcurrent protective devices and auxiliary components.

2. Wiring Diagrams: Power, signal, and control wiring.

C. Qualification Data: For testing agency.

D. Field quality-control test reports including the following:

1. Test procedures used.
2. Test results that comply with requirements.
3. Results of failed tests and corrective action taken to achieve test results that comply with requirements.

E. Panelboard Schedules: For installation in panelboards. Submit final versions after load balancing.

F. Operation and Maintenance Data: For panelboards and components to include in emergency, operation, and maintenance manuals. In addition to items specified in Division 1 Section " Closeout Procedures & Operation and Maintenance Data," include the following:

1. Manufacturer's written instructions for testing and adjusting overcurrent protective devices.
2. Time-current curves, including selectable ranges for each type of overcurrent protective device.

1.4 QUALITY ASSURANCE

A. Testing Agency Qualifications: An independent agency, with the experience and capability to conduct the testing indicated, that is a nationally recognized testing laboratory (NRTL) as defined by OSHA in 29 CFR 1910.7.

B. Source Limitations: Obtain panelboards, overcurrent protective devices, components, and accessories through one source from a single manufacturer.

C. Product Options: Drawings indicate size, profiles, and dimensional requirements of panelboards and are based on the specific system indicated. Refer to Division 1 Section "Product Requirements."

D. Electrical Components, Devices, and Accessories: Listed and labeled as defined in NFPA 70, Article 100, by a testing agency acceptable to authorities having jurisdiction, and marked for intended use.

E. Comply with NEMA PB 1.

F. Comply with NFPA 70.

1.5 PROJECT CONDITIONS

A. Environmental Limitations: Rate equipment for continuous operation under the following conditions, unless otherwise indicated:

1. Ambient Temperature: Not exceeding 104 deg F.
2. Altitude: Not exceeding 6600 feet.

B. Service Conditions: NEMA PB 1, usual service conditions, as follows:

1. Ambient temperatures within limits specified.
2. Altitude not exceeding 6600 feet.

1.6 COORDINATION

A. Coordinate layout and installation of panelboards and components with other construction that penetrates walls or is supported by them, including electrical and other types of equipment, raceways, piping, and encumbrances to workspace clearance requirements.

B. Coordinate size and location of concrete bases. Cast anchor-bolt inserts into bases. Concrete, reinforcement, and formwork requirements are specified in Division 3.

PART 2 - PRODUCTS

2.1 MANUFACTURERS

A. Manufacturers: Subject to compliance with requirements, provide products by one of the following:

1. Panelboards, Overcurrent Protective Devices, Controllers, Contactors, and Accessories:

a. General Electric Co.; Electrical Distribution & Protection Div.
b. Square D.

2.2 MANUFACTURED UNITS

A. Enclosures: Flush- and surface-mounted cabinets. NEMA PB 1, Type 1.

1. Rated for environmental conditions at installed location.

a. Outdoor Locatns: NEMA 250, Type 3R.
b. Kitchen Areas: NEMA 250, Type 4X, siotainless steel.

2. Hinged Front Cover: Entire front trim hinged to box and with standard door within hinged trim cover.
3. Finish: Manufacturer's standard enamel finish over corrosion-resistant treatment or primer coat.
4. Directory Card: With transparent protective cover, mounted in metal frame, inside panelboard door.

B. Phase and Ground Buses:

1. Material: Hard-drawn copper, 98 percent conductivity.
2. Equipment Ground Bus: Adequate for feeder and branch-circuit equipment ground conductors; bonded to box.
3. Extra-Capacity Neutral Bus: Neutral bus rated 200 percent of phase bus and UL listed as suitable for nonlinear loads.

C. Conductor Connectors: Suitable for use with conductor material.

1. Main and Neutral Lugs: Compression type.
2. Ground Lugs and Bus Configured Terminators: Compression type.

3. Feed-Through Lugs: Compression type suitable for use with conductor material. Locate at opposite end of bus from incoming lugs or main device.
4. Extra-Capacity Neutral Lugs: Rated 200 percent of phase lugs mounted on extra-capacity neutral bus.

D. Future Devices: Mounting brackets, bus connections, and necessary appurtenances required for future installation of devices.

2.3 PANELBOARD SHORT-CIRCUIT RATING

A. UL label indicating series-connected rating with integral or remote upstream overcurrent protective devices. Include size and type of upstream device allowable, branch devices allowable, and UL series-connected short-circuit rating.

2.4 DISTRIBUTION PANELBOARDS

A. Doors: Secured with vault-type latch with tumbler lock; keyed alike. Omit for fused-switch panelboards.

B. Main Overcurrent Protective Devices: Circuit breaker.

C. Branch Overcurrent Protective Devices:

1. For Circuit-Breaker Frame Sizes 125 A and Smaller: Bolt-on circuit breakers.
2. For Circuit-Breaker Frame Sizes Larger Than 125 A: Bolt-on circuit breakers; plug-in circuit breakers where individual positive-locking device requires mechanical release for removal.

2.5 LIGHTING AND APPLIANCE BRANCH-CIRCUIT PANELBOARDS

A. Branch Overcurrent Protective Devices: Bolt-on circuit breakers, replaceable without disturbing adjacent units.

B. Doors: Concealed hinges; secured with flush latch with tumbler lock; keyed alike.

2.6 TRANSIENT VOLTAGE SUPPRESSION PANELBOARDS

A. Doors: Secured with vault-type latch with tumbler lock; keyed alike.

B. Main Overcurrent Devices: Thermal-magnetic circuit breaker.

C. Branch Overcurrent Protective Devices: Bolt-on circuit breakers.

D. Bus: Copper phase and neutral buses; 200 percent capacity neutral bus and lugs.

E. Transient Voltage Suppression Device: IEEE C62.41, integrally mounted, plug-in-style, solid-state, parallel-connected, sine-wave tracking suppression and filtering modules.

2.7 OVERCURRENT PROTECTIVE DEVICES

A. Molded-Case Circuit Breaker: UL 489, with series-connected rating to meet available fault currents.

1. Thermal-Magnetic Circuit Breakers: Inverse time-current element for low-level overloads, and instantaneous magnetic trip element for short circuits. Adjustable magnetic trip setting for circuit-breaker frame sizes 250 A and larger.

B. Molded-Case Circuit-Breaker Features and Accessories: Standard frame sizes, trip ratings, and number of poles.

1. Lugs: Compression style, suitable for number, size, trip ratings, and conductor materials.
2. Application Listing: Appropriate for application; Type SWD for switching fluorescent lighting loads; Type HACR for heating, air-conditioning, and refrigerating equipment.
3. Ground-Fault Protection: Integrally mounted relay and trip unit with adjustable pickup and time-delay settings, push-to-test feature, and ground-fault indicator.
4. Shunt Trip: 120-V trip coil energized from separate circuit, set to trip at [55] [75] percent of rated voltage.
5. Undervoltage Trip: Set to operate at 35 to 75 percent of rated voltage [without intentional] [with field-adjustable 0.1- to 0.6-second] time delay.
6. Multipole units enclosed in a single housing or factory-assembled to operate as a single unit.

PART 3 - EXECUTION

3.1 INSTALLATION

A. Install panelboards and accessories according to NEMA PB 1.1.

B. Mount top of trim 74 inches above finished floor, unless otherwise indicated.

C. Mount plumb and rigid without distortion of box. Mount recessed panelboards with fronts uniformly flush with wall finish.

D. Install overcurrent protective devices and controllers.

1. Set field-adjustable switches and circuit-breaker trip ranges.

E. Install filler plates in unused spaces.

F. Stub four 1-inch empty conduits from panelboard into accessible ceiling space or space designated to be ceiling space in the future. Stub four 1-inch empty conduits into raised floor space or below slab not on grade.

G. Arrange conductors in gutters into groups and bundle and wrap with wire ties after completing load balancing.

3.2 IDENTIFICATION

A. Identify field-installed conductors, interconnecting wiring, and components; provide warning signs as specified in Division 16 Section "Electrical Identification."

B. Create a directory to indicate installed circuit loads after balancing panelboard loads. Obtain approval before installing. Use a computer or typewriter to create directory; handwritten directories are not acceptable.

C. Panelboard Nameplates: Label each panelboard with engraved metal or laminated-plastic nameplate mounted with corrosion-resistant screws.

3.3 CONNECTIONS

A. Ground equipment according to Division 16 Section "Grounding and Bonding."

B. Connect wiring according to Division 16 Section "Conductors and Cables."

3.4 FIELD QUALITY CONTROL

A. Prepare for acceptance tests as follows:

1. Test insulation resistance for each panelboard bus, component, connecting supply, feeder, and control circuit.
2. Test continuity of each circuit.

B. Testing Agency: Engage a qualified testing and inspecting agency to perform the following field tests and inspections and prepare test reports:

1. Perform each electrical test and visual and mechanical inspection stated in NETA ATS, Section 7.5 for switches and Section 7.6 for molded-case circuit breakers. Certify compliance with test parameters.
2. Correct malfunctioning units on-site, where possible, and retest to demonstrate compliance; otherwise, replace with new units and retest.

C. Load Balancing: After Substantial Completion, but not more than 60 days after Final Acceptance, measure load balancing and make circuit changes.

1. Measure as directed during period of normal system loading.
2. Perform load-balancing circuit changes outside normal occupancy/working schedule of the facility and at time directed. Avoid disrupting critical 24-hour services such as fax machines and on-line data processing, computing, transmitting, and receiving equipment.
3. After circuit changes, recheck loads during normal load period. Record all load readings before and after changes and submit test records.
4. Tolerance: Difference exceeding 20 percent between phase loads, within a panelboard, is not acceptable. Rebalance and recheck as necessary to meet this minimum requirement.

D. Infrared Scanning: After Substantial Completion, but not more than 60 days after Final Acceptance, perform an infrared scanning of each panelboard. Remove panel fronts so joints and connections are accessible to portable scanner.

1. Instrument: Use an infrared scanning device designed to measure temperature or to detect significant deviations from normal values. Provide calibration record for device.
2. Record of Infrared Scanning: Prepare a certified report that identifies panelboards checked and describes scanning results. Include notation of deficiencies detected, remedial action taken, and observations after remedial action.

3.5 CLEANING

A. On completion of installation, inspect interior and exterior of panelboards. Remove paint splatters and other spots. Vacuum dirt and debris; do not use compressed air to assist in cleaning. Repair exposed surfaces to match original finish.

END OF SECTION 16442

SECTION 16491
FUSES

PART 1 - GENERAL

1.1 RELATED DOCUMENTS

A. Drawings and general provisions of the Contract, including General and Supplementary Conditions and Division 1 Specification Sections, apply to this Section.

1.2 SUMMARY

A. This Section includes the following:

1. Cartridge fuses rated 600 V and less for use in switches, switchboards and controllers.

1.3 SUBMITTALS

A. Product Data: Include the following for each fuse type indicated:

1. Dimensions and manufacturer's technical data on features, performance, electrical characteristics, and ratings.

B. Ambient Temperature Adjustment Information: If ratings of fuses have been adjusted to accommodate ambient temperatures, provide list of fuses with adjusted ratings.

1. For each fuse having adjusted ratings, include location of fuse, original fuse rating, local ambient temperature, and adjusted fuse rating.
2. Provide manufacturer's technical data on which ambient temperature adjustment calculations are based.

C. Operation and Maintenance Data: For fuses to include in emergency, operation, and maintenance manuals.

1. In addition to items specified in Division 1 Section "Closeout Procedures," include the following:

a. Let-through current curves for fuses with current-limiting characteristics.
b. Time-current curves, coordination charts and tables, and related data.
c. Ambient temperature adjustment information.

1.4 QUALITY ASSURANCE

A. Source Limitations: Obtain fuses from a single manufacturer.

B. Electrical Components, Devices, and Accessories: Listed and labeled as defined in NFPA 70, Article 100, by a testing agency acceptable to authorities having jurisdiction, and marked for intended use.

C. Comply with NEMA FU 1.

D. Comply with NFPA 70.

1.5 PROJECT CONDITIONS

A. Where ambient temperature to which fuses are directly exposed is less than 40 deg F or more than 100 deg F, apply manufacturer's ambient temperature adjustment factors to fuse ratings.

1.6 COORDINATION

A. Coordinate fuse ratings with utilization equipment nameplate limitations of maximum fuse size.

PART 2 - PRODUCTS

2.1 MANUFACTURERS

A. Manufacturers: Subject to compliance with requirements, provide products by one of the following:

1. Cooper Bussman, Inc.
2. Eagle Electric Mfg. Co., Inc.; Cooper Industries, Inc.
3. Ferraz Shawmut, Inc.
4. Tracor, Inc.; Littelfuse, Inc. Subsidiary.

2.2 CARTRIDGE FUSES

A. Characteristics: NEMA FU 1, nonrenewable cartridge fuse; class and current rating indicated; voltage rating consistent with circuit voltage.

PART 3 - EXECUTION

3.1 EXAMINATION

A. Examine utilization equipment nameplates and installation instructions. Install fuses of sizes and with characteristics appropriate for each piece of equipment.

B. Evaluate ambient temperatures to determine if fuse rating adjustment factors must be applied to fuse ratings.

C. Proceed with installation only after unsatisfactory conditions have been corrected.

3.2 FUSE APPLICATIONS

A. Service Entrance: Class L, time delay.

B. Feeders: Class RK5, time delay.

C. Motor Branch Circuits: Class RK5, time delay.

D. Other Branch Circuits: Class RK5, time delay.

3.3 INSTALLATION

A. Install fuses in fusible devices. Arrange fuses so rating information is readable without removing fuse.

B. Install spare-fuse cabinet(s).

3.4 IDENTIFICATION

A. Install labels indicating fuse replacement information on inside door of each fused switch.

END OF SECTION 16491

SECTION 16511
INTERIOR LIGHTING

PART 1 - GENERAL

1.1 RELATED DOCUMENTS

A. Drawings and general provisions of the Contract, including General and Supplementary Conditions and Division 1 Specification Sections, apply to this Section.

1.2 SUMMARY

A. This Section includes the following:

1. Interior lighting fixtures, lamps, and ballasts.
2. Lighting fixture supports.

B. Related Sections include the following:

1. Division 13 Section "Lighting Controls" for manual or programmable control systems with low-voltage control wiring or data communication circuits.
2. Division 16 Section "Wiring Devices" for manual wall-box dimmers for incandescent lamps.
3. Division 16 Section "Lighting Control Devices" for automatic control of lighting, including time switches, photoelectric relays, occupancy sensors, and multipole lighting relays and contactors.
4. Division 16 Section "Stage Lighting" for theatrical lighting fixtures and their controls.
5. Division 16 Section "Dimming Controls" for architectural dimming systems.

1.3 DEFINITIONS

A. BF: Ballast factor.

B. CRI: Color-rendering index.

C. HID: High-intensity discharge.

D. LER: Luminaire efficacy rating.

E. Luminaire: Complete lighting fixture, including ballast housing if provided.

1.4 SUBMITTALS

A. Product Data: For each type of lighting fixture, arranged in order of fixture designation. Include data on features, accessories, finishes, and the following:

1. Physical description of lighting fixture including dimensions.
2. Ballast.
3. Energy-efficiency data.
4. Life, output, and energy-efficiency data for lamps.
5. Photometric data, in IESNA format, based on laboratory tests of each lighting fixture type, outfitted with lamps, ballasts, and accessories identical to those indicated for the lighting fixture as applied in this Project.

    a. For indicated fixtures, photometric data shall be certified by a qualified independent testing agency. Photometric data for remaining fixtures shall be certified by the manufacturer.
    b. Photometric data shall be certified by a manufacturer's laboratory with a current accreditation under the National Voluntary Laboratory Accreditation Program (NVLAP) for Energy Efficient Lighting Products.

B. Shop Drawings: Show details of nonstandard or custom lighting fixtures. Indicate dimensions, weights, methods of field assembly, components, features, and accessories.

1. Wiring Diagrams: Power and control wiring.

C. Coordination Drawings: Reflected ceiling plan(s) and other details, drawn to scale, on which the following items are shown and coordinated with each other, based on input from installers of the items involved:

1. Lighting fixtures.
2. Suspended ceiling components.
3. Structural members to which suspension systems for lighting fixtures will be attached.
4. Other items in finished ceiling including the following:

    a. Air outlets and inlets.
    b. Speakers.
    c. Sprinklers.
    d. Smoke and fire detectors.
    e. Occupancy sensors.
    f. Access panels.

5. Perimeter moldings.

D. Product Certificates: For each type of ballast for bi-level and dimmer-controlled fixtures, signed by product manufacturer.

E. Qualification Data: For agencies providing photometric data for lighting fixtures.

F. Field quality-control test reports.

G. Operation and Maintenance Data: For lighting equipment and fixtures to include in emergency, operation, and maintenance manuals.

H. Warranties: Special warranties specified in this Section.

1.5 QUALITY ASSURANCE

A. Luminaire Photometric Data Testing Laboratory Qualifications: Provided by manufacturers' laboratories that are accredited under the National Volunteer Laboratory Accreditation Program for Energy Efficient Lighting Products.

B. Electrical Components, Devices, and Accessories: Listed and labeled as defined in NFPA 70, Article 100, by a testing agency acceptable to authorities having jurisdiction, and marked for intended use.

C. Comply with NFPA 70.

D. FMG Compliance: Lighting fixtures for hazardous locations shall be listed and labeled for indicated class and division of hazard by FMG.

1.6 COORDINATION

A. Coordinate layout and installation of lighting fixtures and suspension system with other construction that penetrates ceilings or is supported by them, including HVAC equipment, fire-suppression system, and partition assemblies.

1.7 WARRANTY

A. Special Warranty for Ballasts: Manufacturer's standard form in which ballast manufacturer agrees to repair or replace ballasts that fail in materials or workmanship within specified warranty period.

1. Warranty Period for Electronic Ballasts: Five years from date of Substantial Completion.
2. Warranty Period for Electromagnetic Ballasts: Three years from date of Substantial Completion.

B. Special Warranty for T8 Fluorescent Lamps: Manufacturer's standard form, made out to Owner and signed by lamp manufacturer agreeing to replace lamps that fail in materials or workmanship, f.o.b. the nearest shipping point to Project site, within specified warranty period indicated below.

1. Warranty Period: One year from date of Substantial Completion.

PART 2 - PRODUCTS

2.1 MANUFACTURERS

A. In Interior Lighting Fixture Schedule where titles below are column or row headings that introduce lists, the following requirements apply to product selection:

1. Manufacturers: Subject to compliance with requirements, provide products by one of the manufacturers specified.

2.2 LIGHTING FIXTURES AND COMPONENTS, GENERAL REQUIREMENTS

A. Recessed Fixtures: Comply with NEMA LE 4 for ceiling compatibility for recessed fixtures.

B. Incandescent Fixtures: Comply with UL 1598. Where LER is specified, test according to NEMA LE 5A.

C. Fluorescent Fixtures: Comply with UL 1598. Where LER is specified, test according to NEMA LE 5 and NEMA LE 5A as applicable.

D. HID Fixtures: Comply with UL 1598. Where LER is specified, test according to NEMA LE 5B.

E. Metal Parts: Free of burrs and sharp corners and edges.

F. Sheet Metal Components: Steel, unless otherwise indicated. Form and support to prevent warping and sagging.

G. Doors, Frames, and Other Internal Access: Smooth operating, free of light leakage under operating conditions, and designed to permit relamping without use of tools. Designed to prevent doors, frames, lenses, diffusers, and other components from falling accidentally during relamping and when secured in operating position.

H. Reflecting surfaces shall have minimum reflectance as follows, unless otherwise indicated:

1. White Surfaces: 85 percent.
2. Specular Surfaces: 83 percent.
3. Diffusing Specular Surfaces: 75 percent.
4. Laminated Silver Metallized Film: 90 percent.

I. Plastic Diffusers, Covers, and Globes:

1. Acrylic Lighting Diffusers: 100 percent virgin acrylic plastic. High resistance to yellowing and other changes due to aging, exposure to heat, and UV radiation.

a. Lens Thickness: At least 0.125 inch minimum unless different thickness is indicated.
b. UV stabilized.

2. Glass: Annealed crystal glass, unless otherwise indicated.

J. Electromagnetic-Interference Filters: Factory installed to suppress conducted electromagnetic-interference as required by MIL-STD-461E. Fabricate lighting fixtures with one filter on each ballast indicated to require a filter.

2.3 BALLASTS FOR LINEAR FLUORESCENT LAMPS

A. Electronic Ballasts: Comply with ANSI C82.11; programmed-start type, unless otherwise indicated, and designed for type and quantity of lamps served. Ballasts shall be designed for full light output unless dimmer or bi-level control is indicated.

1. Sound Rating: A.
2. Total Harmonic Distortion Rating: Less than 10 percent.
3. Transient Voltage Protection: IEEE C62.41, Category A or better.
4. Operating Frequency: 42 kHz or higher.
5. Lamp Current Crest Factor: 1.7 or less.
6. BF: 0.85 or higher.
7. Power Factor: 0.98 or higher.
8. Parallel Lamp Circuits: Multiple lamp ballasts shall comply with ANSI C 82.11 and shall be connected to maintain full light output on surviving lamps if one or more lamps fail.

B. Ballasts for Dimmer-Controlled Lighting Fixtures: Electronic type.

1. Dimming Range: 100 to 5 percent of rated lamp lumens.
2. Ballast Input Watts: Can be reduced to 20 percent of normal.
3. Compatibility: Certified by manufacturer for use with specific dimming control system and lamp type indicated.

C. Ballasts for Bi-Level Controlled Lighting Fixtures: Electronic type.

1. Operating Modes: Ballast circuit and leads provide for remote control of the light output of the associated lamp between high- and low-level and off.

    a. High-Level Operation: 100 percent of rated lamp lumens.
    b. Low-Level Operation: 50 percent of rated lamp lumens.

2. Ballast shall provide equal current to each lamp in each operating mode.
3. Compatibility: Certified by manufacturer for use with specific bi-level control system and lamp type indicated.

2.4 BALLASTS FOR COMPACT FLUORESCENT LAMPS

A. Description: Electronic programmed rapid-start type, complying with ANSI C 82.11, designed for type and quantity of lamps indicated. Ballast shall be designed for full light output unless dimmer or bi-level control is indicated:

1. Lamp end-of-life detection and shutdown circuit.
2. Automatic lamp starting after lamp replacement.
3. Sound Rating: A.

4. Total Harmonic Distortion Rating: Less than 20 percent.
5. Transient Voltage Protection: IEEE C62.41, Category A or better.
6. Operating Frequency: 20 kHz or higher.
7. Lamp Current Crest Factor: 1.7 or less.
8. BF: 0.95 or higher, unless otherwise indicated.
9. Power Factor: 0.98 or higher.
10. Interference: Comply with 47 CFR, Chapter 1, Part 18, Subpart C, for limitations on electromagnetic and radio-frequency interference for nonconsumer equipment.
11. Ballast Case Temperature: 75 deg C, maximum.

2.5 BALLASTS FOR HID LAMPS

A. Electromagnetic Ballast for Metal-Halide Lamps: Comply with ANSI C82.4 and UL 1029. Include the following features, unless otherwise indicated:

1. Ballast Circuit: Constant-wattage autotransformer or regulating high-power-factor type.
2. Minimum Starting Temperature: Minus 22 deg F for single-lamp ballasts.
3. Normal Ambient Operating Temperature: 104 deg F.
4. Open-circuit operation that will not reduce average life.
5. Low-Noise Ballasts: Manufacturers' standard epoxy-encapsulated models designed to minimize audible fixture noise.

B. Electronic Ballast for Metal-Halide Lamps: Include the following features unless otherwise indicated:

1. Lamp end-of-life detection and shutdown circuit.
2. Sound Rating: A.
3. Total Harmonic Distortion Rating: Less than 15 percent.
4. Transient Voltage Protection: IEEE C62.41, Category A or better.
5. Lamp Current Crest Factor: 1.5 or less.
6. Power Factor: .90 or higher.
7. Interference: Comply with 47 CFR, Chapter 1, Part 18, Subpart C, for limitations on electromagnetic and radio-frequency interference for nonconsumer equipment.
8. Protection: Class P thermal cutout.
9. Retain subparagraph and associated subparagraphs below for bi-level ballasts.
10. Bi-Level Dimming Ballast: Ballast circuit and leads provide for remote control of the light output of the associated fixture between high- and low-level and off.

    a. High-Level Operation: 100 percent of rated lamp lumens.
    b. Low-Level Operation: 50 percent of rated lamp lumens.
    c. Compatibility: Certified by ballast manufacturer for use with specific bi-level control system and lamp type indicated. Certified by lamp manufacturer that ballast operating modes are free from negative effect on lamp life and color-rendering capability.

C. Auxiliary Instant-On Quartz System: Factory-installed feature automatically switches quartz lamp on when fixture is initially energized and when power outages occur. System automatically turns quartz lamp off when HID lamp reaches approximately 60 percent light output.

2.6 EXIT SIGNS

A. Description: Comply with UL 924; for sign colors, visibility, luminance, and lettering size, comply with authorities having jurisdiction.

B. Internally Lighted Signs:

1. Lamps for AC Operation: LEDs, 70,000 hours minimum rated lamp life.

2.7 FLUORESCENT LAMPS

A. LAMPS MANUFACTURERS:

1. General Electric (Base bid)
2. Philips (Alternate bid)
3. Sylvania (Alternate bid)

B. T8 rapid-startlamps, rated 32 W maximum, nominal length of 48 inches, 2800 initial lumens (minimum), CRI 82 (minimum), color temperature 4100 K, and average rated life 24,000 hours, unless otherwise indicated. T8 rapid-start

C. Compact Fluorescent Lamps: 4-Pin, CRI 80 (minimum), color temperature 4100 K, average rated life of 10,000 hours at 3 hours operation per start, unless otherwise indicated.

1. 32 W: T4, triple tube, rated 2400 initial lumens (minimum).
2. 42 W: T4, triple tube, rated 3200 initial lumens (minimum).

2.8 HID LAMPS

A. LAMPS MANUFACTURERS:

1. Philips.
2. Sylvania.
3. General Electric

B. Metal-Halide Lamps: ANSI C78.1372, with a minimum CRI 65, and color temperature 4000 K.

C. Pulse-Start, Metal-Halide Lamps: Minimum CRI 65, and color temperature 4000 K.

D. Ceramic, Pulse-Start, Metal-Halide Lamps: Minimum CRI 80, and color temperature 4000 K.

2.9 LIGHTING FIXTURE SUPPORT COMPONENTS

A. Comply with Division 16 Section "Electrical Supports and Seismic Restraints" for channel- and angle-iron supports and nonmetallic channel and angle supports.

B. Single-Stem Hangers: 1/2-inch steel tubing with swivel ball fittings and ceiling canopy. Finish same as fixture.

C. Twin-Stem Hangers: Two, 1/2-inch steel tubes with single canopy designed to mount a single fixture. Finish same as fixture.

D. Wires: ASTM A 641/A 641M, Class 3, soft temper, zinc-coated steel, 12 gage.

E. Wires for Humid Spaces: ASTM A 580/A 580M, Composition 302 or 304, annealed stainless steel, 12 gage.

F. Rod Hangers: 3/16-inch minimum diameter, cadmium-plated, threaded steel rod.

G. Hook Hangers: Integrated assembly matched to fixture and line voltage and equipped with threaded attachment, cord, and locking-type plug.

PART 3 - EXECUTION

3.1 INSTALLATION

A. Lighting fixtures: Set level, plumb, and square with ceilings and walls. Install lamps in each fixture.

B. Support for Lighting Fixtures in or on Grid-Type Suspended Ceilings: Use grid as a support element.

1. Install a minimum of four ceiling support system rods or wires for each fixture. Locate not more than 6 inches from lighting fixture corners.
2. Support Clips: Fasten to lighting fixtures and to ceiling grid members at or near each fixture corner with clips that are UL listed for the application.
3. Fixtures of Sizes Less Than Ceiling Grid: Install as indicated on reflected ceiling plans or center in acoustical panel, and support fixtures independently with at least two 3/4-inch metal channels spanning and secured to ceiling tees.

C. Suspended Lighting Fixture Support:

1. Pendants and Rods: Where longer than 48 inches, brace to limit swinging.
2. Stem-Mounted, Single-Unit Fixtures: Suspend with twin-stem hangers.
3. Continuous Rows: Use tubing or stem for wiring at one point and tubing or rod for suspension for each unit length of fixture chassis, including one at each end.

D. Adjust aimable lighting fixtures to provide required light intensities.

E. Connect wiring according to Division 16 Section "Conductors and Cables."

3.2 FIELD QUALITY CONTROL

A. Test for Emergency Lighting: Interrupt power supply to demonstrate proper operation. Verify transfer from normal power to battery and retransfer to normal.

B. Prepare a written report of tests, inspections, observations, and verifications indicating and interpreting results. If adjustments are made to lighting system, retest to demonstrate compliance with standards.

END OF SECTION 16511

Barton Malow

Design/Construction Services

Troy School District
2004 Bond Program
Troy, MI

Phase I – Three Middle Schools Remodeling & Addition
(Boulan Park, Larson & Smith)
Bid Package # 9361

Addendum #1

Issue Date: December 11, 2006

Bid Due Date: December 19, 2006 @ 3PM

Barton Malow
Design/Construction Services

Client:	Troy School District
Project Name:	Three Middle Schools Remodeling & Addition (Boulan Park, Larson & Smith) Bid Pack No. 9361
Location	Troy, Michigan
Project Number:	041049
Issue Date:	December 11, 2006

Construction / Services

ADDENDUM No. 1

BID DATE: December 19, 2006 **BID TIME: 3:00 PM - Local Time**
Location: Troy School District
1140 Rankin
Troy, MI 48083

This Addendum is required to inform Bidders of revisions to the Contract Documents.

All requirements contained in the Contract Documents shall apply to this Addendum and the general character of the work called for in this Addendum shall be the same as originally set forth in the applicable portions of the contract.

This Addendum is hereby made a part of the Contract Documents and shall assume its position of relevance in the Contract Documents.

Drawings **Are** issued with this Addendum. Corrections are *italicized and in Arial font.*

The following are included as part of this Addendum:

1. Kingscott Architect Inc. portion of the Addendum (35 pages)
   a. Specification Section 02751, Paragraph 2.5, page 02751-3 – Add the following paragraph:
      B. *Tactile Warning Strips - Provide and install per manufacturer's recommendation Armor Tile Cast In Place Tactile Warning Systems, color: yellow, size: 24" X 36" (2 req./ramp), or approved substitute, at all barrier free ramps as detailed.*
2. Pre-Bid Meeting Minutes (5 pages)
3. Pre-Bid Meeting "Sign in Sheet" (1 page)

4. Project Manual Section 00015 List of Drawings
    a. Boulan Park Middle School
        i. Add the following sheets:
            1. *SHEET 3 of 3 - Metco Land Sea Survey* (shows logistic plan, contractor parking, temp fencing and temp roadway).
            2. *M4.1 – Mechanical Enlargement Plans*
            3. *M4.2 – Mechanical Enlargement Plans*
    b. Larson Middle School
        i. Add the following sheet:
            1. *SHEET 1 of 2 - Metco Land Sea Survey* (shows logistic plan, contractor parking, temp fencing and temp roadway).
    c. Smith Middle School
        i. Add the following sheets:
            1. *SHEET 1 of 1 – Metco Land Sea Survey* (shows logistic plan, contractor parking, temp fencing and temp roadway).
            2. *A2.5 – Partition Sections*
5. Project Manual Section 00220 Work Scopes – **ALL REISSUED** (49 pages)
6. Project Manual Section 00230 Schedule and Phasing – REISSUED (16 pages)
7. Project Manual Section 00400 Bid Proposal Form – REISSUED (9 pages)
8. Project Manual Section 00430 Bid Form Supplements - Clarification
    a. Affidavit of Bidder (Compliance with School Safety Initiative) is NOT required with bid.
9. Project Manual Section 01210 Allowances – REISSUED (2 pages)
10. Project Manual Section 01330 Submittals – REISSUED (9 pages)
11. Project Manual Section 01600 Forms
    a. Contractor's Guarantee (CLO 7.3) – REISSUED (1 page)
12. RFI's - 46 Questions (132 pages)
    a. Substitution Requests are located in this section.
    b. Please note the spreadsheet at the front of this section is a compilation of the pages that follow.
13. Planholders Listing (4 pages)

Kingscott Associates, Inc.
Architects/Engineers
Kalamazoo, Michigan
December 7, 2006

Troy School District
Troy Elementary Schools
Additions and Remodeling
Boulan Park, Larson, and Smith
Middle Schools
A/E 2643-10 DF

ADDENDUM NO. 1

SPECIAL NOTE:

The Notice to Bidders, Instructions to Bidders, General Conditions of the Contract for Construction, Supplementary Conditions of the Contract for Construction, and all modifications and previously issued Contract Documentation are a part of this Addendum.

SCOPE OF WORK:

The following items are changes, additions, deletions, clarifications and/or errors and omissions in plans and specifications, and shall be considered by each Bidder in making up and submitting his proposal. All of these items shall be considered a part of the Contract Documents.

NOTICE TO ALL BIDDERS:

All Bidders shall take note of all items covered by this Addendum. Each Bidder shall review the total scope of his responsibilities will respect to his contract work and his interface with the work of others, as well as his required interface with their work.

ATTACHMENTS:

Boulan Park Middle School

Full size drawings M4.1 and M4.2 Enlarged mechanical demo and mechanical plan.
11x17 sketch M1
8.5x11 sketches M2-M5

Larson Middle School

11x17 sketch M6
8.5x11 sketches M7-M10

Smith Middle School

A2.5 Partition Details, full size drawing
M4.2x, full size drawing
8.5x11 sketches A1-A5, and M11-M18

SPECIFICATIONS:

Item #01
12355 - INSTITUTIONAL CASEWORK: Polyvision Corp. and Wood-Metal Industries have been accepted as approved manufacturers subject to full compliance with the specification and construction drawing requirements.

Item #02
01230 - Alternates: Add the following alternates to the alternate list:

1. Add Alternate No. B-E3: Provide one additional lighting switch for each space listed below to allow separate control of lighting fixtures at the teaching wall. All lighting in each space shall be controlled through toggle switches and occupancy sensors. Final lighting switching arrangement shall be confirmed and approved by the Owner.
2. Add Alternate No. B-M1: Provide lined ductwork per specifications and duct silencers per sound attenuator schedule and per specifications. Location of duct silencers shall be as shown on drawings.
3. Add Alternate No. L-E3: Provide one additional lighting switch for each space listed below to allow separate control of lighting fixtures at the teaching wall. All lighting in each space shall be controlled through toggle switches and occupancy sensors. Final lighting switching arrangement shall be confirmed and approved by the Owner.
4. Add Alternate No. L-M1: Provide lined ductwork per specifications and duct silencers per sound attenuator schedule and per specifications. Location of duct silencers shall be as shown on drawings.
5. Deduct Alternate No. S-2: Provide a deduct alternate to eliminate the demolition work for the existing stone aggregate fascia panels identified for demolition by demolition notes #15-#18. The owner shall provide abatement services if asbestos material is found in the existing stone aggregate panels.

Item #03
08710 – Door Hardware: Add the following door to the door hardware group list: Smith door #407 shall be hardware group A02.

Item #04:
Section TOC, Division 13, Page TOC-2 – Add **Section 13915 – Fire Suppression Piping** to the Table of Contents.

Item #05:
Section 15080, Paragraph 3.15, Page 15080-23 – Add the following Paragraphs:

"G. Condensate and Equipment Drain Water below 60 °F:
1. All Pipe sizes: Insulation shall be the following:
a. Mineral-Fiber, Preformed Pipe Insulation, Type 1: 1-inch thick with Vapor Barrier."
H. Chilled Water, above 40 °F:
1. All Pipe sizes: Insulation shall be the following:
a. Mineral-Fiber, Preformed Pipe Insulation, Type 1: 1 1/2-inch thick with Vapor Barrier."

Item #06:

Section 15768, Paragraph 1,2, A., Page 15768-1 – Revise this Paragraph to read as follows:

"A. This Section includes **the following:**

1. NEW unit ventilators and accessories with a Hydronic Heating Coil and Direct Expansion Cooling Coil with remote mounted Air Cooled Condenser.

2. New Exterior Wall Louvers for existing Unit Ventilators."

Section 15768, Paragraph 2,2, Page 15768-2 – Revise this Paragraph to read as follows:

"A. Description: **New** Factory-packaged and –tested units rated according to ARI 840, ASHRAE 33, and UL 1995, including finished cabinet, filter, **DX Cooling Coil,** drain pan, supply-air fan and motor in blow-through configuration, and Hydronic ~~cooling~~ **heating** coil."

Section 15768, Paragraph 2,3, Page 15768-3 - Add the following Paragraph:

"**G. Electrical Connection: Single electrical connection with Non-Fused Disconnect switch."**

Section 15768, Paragraph 2,6, A., Page 15768-3 – Revise this Paragraph to read as follows:

"A. Mixing Dampers: Galvanized-steel blades with edge and end seals and nylon bearings; with **Factory mounted** electric actuator."

Section 15768, Paragraph 2,7, C., Page 15768-4 – ~~Delete~~ this Paragraph in its entirety.

Section 15768, Paragraph 2,7, E., Page 15768-4 – Change the Louver Manufacturer to **"Curbs and Damper Products, Inc.".**

Section 15768, Paragraph 2,7, Page 15768-4 – Add the following Paragraphs:

"**F. Filler Section to match Unit Ventilator color.**

G. Laminate Back splash and Window filler. Match UV color.

H. Insulated Cross-Over pipe chase."

Section 15768, Paragraph 2,8, C., Page 15768-4 – Revise this Paragraph to read as follows:

"C. Compressor: Hermetic, scroll type; internally isolated for vibration with factory-installed ~~safety devices~~ **electro-mechanical safeties** as follows:

1. Antirecycle timer:
2. High-pressure cutout.
3. Low-pressure cutout or loss-of-charge switch.
4. Internal thermal-overload protection
5. Current and voltage sensitive safety devices."

Section 15768, Paragraph 2,9, Page 15768-5 – Revise this Paragraph to read as follows:

"A. Control devices **are specified in Division 15 Section "HVAC Instrumentation and Controls". Controls are to be provided by Temperature Controls Contractor, Factory installed and wired by UV Manufacturer.**

B. Refer to Drawings for "Sequence of Operation" and "UV Wiring diagram."

Section 15768, Paragraph 2,10, Page 15768-5 – Add the following Paragraph:

"**2.10 HORIZONTAL BLADE ALUMINUM LOUVER – EXISTING UNIT VENTILATORS**

A. Aluminum masonry louver shall be constructed with horizontal chevron-type, heavy gauge aluminum blades and aluminum frame as manufactured by Curbs and Damper Products Inc. – Model L-200. The louver frame shall be heavy-gauge aluminum, 2-1/2 inch deep in direction of airflow, and have weep holes along face of bottom edge. A ½-inch square mesh screen shall be provided on the interior side of the louver.

1. **Louver shall come as a preassembled unit complete with Air Flow splitters and a heavy gauge aluminum intake grille with square holes to match the louver opening.**
2. **Louver Color: Dark bronze.**

Item #07
Section 15900, Paragraph 1.4, Page 15900-2 – Change this Paragraph to read as follows:
"SEQUENCE OF OPERATION **Refer to Sequence of Operation on Drawings.**"

Item #08:
Section 15940 – Sequence of Operations - ~~Delete~~ this Section in its entirety.

DRAWINGS:

All Buildings:

Item #01
All Buildings
See title sheet for partition sheet number. Disregard notes on ceiling plans for partition sheet number.

Item #02:
ALL Buildings AND all Mechanical Demolition Drawings:
Provide "**GENERAL DEMOLITION NOTE: PROVIDE CAPS FOR ALL OPEN PNEUMATIC PIPING.**"

Boulan Park Middle School

Item #01
All Demolition and Floor Plans: In all classrooms with ceilings lowered to 8'-6" remove and reinstall the projection screen. Provide removal and replacement of 35 screens for the base bid. Provide an add and or deduct unit cost to remove and replace a screen for adjustment of final screen count.

Item #02
C 1.2 Site Grading Plan: The storm pipe run between CB#2 and CB#3 should be 115 lft 12" hdpe @ 0.39% instead of 90 lft at 0.5%.

Item #03
D1.2 Demolition Plan:
1. Principal #243 – Change demo note from 19 to 4.
2. Assistant Principal #238 – Change demo note from 19 to 4.

Item #04
All Ceiling Plans: In all classrooms with ceilings lowered to 8'-6" provide foam gasket material between the wall angle and the glass in the door sidelights and other glazing extending to the ceiling.

Item #05
A1.3 and A1.3 Ceiling Plans: On operable partition walls provide wall angel trim notched out to fit around vertical metal trim strips on wall. Wall angels may be cut and spliced at trim strip locations to facilitate notching. See ceiling plans for locations shown with stacked panels or see demolition plans for operable wall panel locations. This will be required on one wall of approximately 20 classrooms.

Item #06
A2.1 Ceiling Plan:
1. Corridor #132 – Add ceiling note #3.
2. Lockers #120 – The ceiling note covered by the diffuser is #3.

Item #07
A2.2 Ceiling Plan:
1. Reading #201 – Add ceiling elevation note 8'-6"/2x4.
2. Craft's #202 – Change note #7 to note #9. Add 8'-6" ceiling height marker.
3. Industrial Arts #203 – Ceiling is existing 2x4 as noted.
4. Storage #214 – Ceiling shall be 2x4 grid and tile.
5. Women's #242 – Add ceiling note #9.
6. Corridor #298 – Add ceiling note #3. Delete "EX" from 2x2 ceiling height marker.
7. Principal #243 – Change ceiling note #9 to #3. Change ceiling height to 9'-0"
8. Assistant Principal #238 – Change ceiling note #9 to #3. Change ceiling height to 9'-0"

Item #08
A2.3 Ceiling Plan:
1. Science #313 – The ceiling note covered by the diffuser is #3.
2. Corridor #344 – Add ceiling note #7.
3. Science #351 – The ceiling note covered by the diffuser is #9.

Item #09
A2.3a Ceiling Plan:
1. Corridor #343 – Add ceiling note #7.
2. Conf. #331 – Add ceiling note #9.
3. Conf. #339 – Add ceiling note #9. The ceiling is 2x4 at 8'-6".

Item #10
E1.2, E1.3 and E1.3a Lighting and Power Plans-Pricing for add Alternate B-E3: Provide one additional lighting switch for each space listed below to allow separate control of lighting fixtures at the teaching wall. All lighting in each space shall be controlled through toggle switches and occupancy sensors. Final lighting switching arrangement shall be confirmed and approved by the Owner:
1. E1.2: Special Ed 201, Drafting 202, Art 205, Fabrics 218, Home Living 220.
2. E1.3: Classroom 300, 302, 303, 304, 310, 311, 312, 314, and 315, Science 301, 313 and 351.
3. E1.3a: Classroom 326, 327, 329, 330, 334, 335, 337, 338, and 353, Science 328, 336 and 340.

Item #11:
M2.1 and M2.1a Hydronic Plan – Unit 100
1. Add "**AHU Sequence of Operation**" as shown on sketch M1.
2. Branch Piping shown on Drawings is Branch piping from existing HS & HR piping. There is no Branch piping from the New CHS & CHR piping (See Sketch M2).

Item #12:
M0.1 HVAC Demolition Plan – Unit 100
1. Existing Kitchen Supply Air ductwork drops are as shown on sketch M3.
2. ALTERNATE M1: Remove existing ductwork as shown on sketch M3.

Item #13:
M3.1 HVAC Plan – Unit 100
1. Existing Kitchen Supply Air ductwork drops are as shown on sketch M4.
2. Remove Note "~~(TYP OF 4)~~" as shown on sketch M4.
3. ALTERNATE M1: Provide and install new ductwork and Sound Attenuators as shown on sketch M4.

Item #14:
ME1.1 Mechanical/Electrical Schedules and Details: ADD "**Sound Attenuator Schedule**" as shown on sketch M5.

Item #15:
M4.1 and M4.2 Mechanical Enlargement Plans: Add Drawings M4.1 and M4.2 to the Contract Documents.

Larson Middle School

Item #01
All Demolition and Floor Plans: In all classrooms with ceilings lowered to 8'-6" remove and reinstall the projection screen. Provide removal and replacement of 35 screens for the base bid. Provide an add and or deduct unit cost to remove and replace a screen for adjustment of final screen count.

Item #02
D1.2 Demolition Plan:
1. Principal #243 – Change demo note from 19 to 4.
2. Assistant Principal #238 – Change demo note from 19 to 4.
3. Hall #292 – Change demo note #4 to #19.

Item #03
All Ceiling Plans: In all classrooms with ceilings lowered to 8'-6" provide foam gasket material between the wall angle and the glass in the door sidelights and other glazing extending to the ceiling.

Item #04
A2.1 Ceiling Plan:
1. Corridor #132 – Add ceiling note #3.
2. Lockers #120 – The ceiling note covered by the diffuser is #3.
3. Toilet #119 – The ceiling note covered by the diffuser is #5.
4. Practice 104 – Ceiling is 1x1 not gyp. as noted on ceiling height marker.

Item #05
A2.2 Ceiling Plan:

1. Spec. Ed #201 – Add ceiling note #9 and 8'-6"/2x4 notes.
2. Drafting #202 – Add note #9.
3. Tech #203 – add exist. 2x4 to existing 9'-0" ceiling height tag. The existing grid and tile is 2x4 to remain.
4. Applied technology #216 – disregard 9'-0"/exist. 2x4 note in north end of room.
5. Fabrics 218, Home living #220 and Food #221 are all new 2x4 tile and grid at 8'-6". Disregard 2x2 notes.
6. Storage #229 - Add 8'-6"/gyp. marker.
7. General office #231 – Add 9'-0"/2x2 marker
8. Storage #241 – Add 8'-6"/2x2 marker.
9. Women's #242 – Add ceiling note #9.
10. Principal #243 – Change ceiling not #9 to #3. Change ceiling height to 9'-0".
11. Assistant Principal #238 – Change ceiling not #9 to #3. Change ceiling height to 9'-0".
12. Corridor #289 – Add ceiling note #3 and bulkhead detail #4.

Item #06
A2.3 Ceiling Plan:

1. Corridor #345 - Add ceiling note #7.

Item #07
A2.3a Ceiling Plan:

1. Conf. #333 - Ceiling note partly covered by diffuser is #9.
2. Conf. #335 - Ceiling note partly covered by diffuser is #9.

Item #08
A1.3 and A1.3 Ceiling Plans: On operable partition walls provide wall angel trim notched out to fit around vertical metal trim strips on wall. Wall angels may be cut and spliced at trim strip locations to facilitate notching. See ceiling plans for locations shown with stacked panels or see demolition plans for operable wall panel locations. This will be required on one wall of approximately 20 classrooms.

Item #09:
M2.1a Hydronic Plan – Unit 100a: Add "AHU Sequence of Operation" as shown on sketch M6.

Item #10:
M0.1 HVAC Demolition Plan – Unit 100

1. Existing Kitchen Supply Air ductwork drops are as shown on sketch M7.
2. ALTERNATE M1: Remove existing ductwork as shown on sketch M7.

Item #11:
M3.1 HVAC Plan – Unit 100

1. Existing Kitchen Supply Air ductwork drops are as shown on sketch M8.
2. Remove Note "(TYP OF 4)" as shown on sketch M8.
3. ALTERNATE M1: Provide and install new ductwork and Sound Attenuators as shown on sketch M8.

Item #12:
ME1.1 Mechanical/Electrical Schedules and Details: ADD "**Sound Attenuator Schedule**" as shown on sketch M9.

Item #13:
3/M4.1 Mechanical Enlargement Plans

1. Change Plan Title to read as follows: "**ENLARGED PENTHOUSE 9 (GYM)**".
2. ADD removal of AH-4 Motor as shown on sketch M10.
3. ADD HVAC Demolition Notes #5 to read as follows:
   "**5. REMOVE EXISTING 5 HP SUPPLY FAN MOTOR INCLUDING MOTOR, SUPPORT, PULLEY AND BELT GUARD. RETAIN SUPPORT, PULLEY AND BELT GUARD FOR REINSTALLATION. IF POSSIBLE, PREPARE MOTOR SUPPORT FRAME FOR NEW MOTOR INSTALLATION.**"

Item #14:
4/M4.1 Mechanical Enlargement Plans: Change Plan Title to read as follows: "**ENLARGED PENTHOUSE 8**".

Item #15:
3/M4.2 Mechanical Enlargement Plans

1. Change Plan Title to read as follows: "**ENLARGED PENTHOUSE 9 (GYM)**".
2. ADD Installation of New AH-4 Motor as shown on sketch M10.
3. ADD HVAC NOTES #4 to read as follows:
   "**4. INSTALL NEW 7.5 HP SUPPLY FAN MOTOR IN SAME LOCATION AS EXISTING. PROVIDE MOTOR SUPPORT, PULLEY AND BELT GUARD. IF POSSIBLE, REUSE EXISTING MOTOR SUPPORT, PULLEY AND BELT GUARD. WHERE NECESSARY, PROVIDE NEW ANCILLARY EQUIPMENT FOR NEW MOTOR INSTALLATION.**"

Item #16:
4/M4.2 Mechanical Enlargement Plans: Change Plan Title to read as follows: "**ENLARGED PENTHOUSE 8**".

Smith Middle School

Item #01
D1.3 Demo Plan: Remove and relocate UV as shown on attachment A1. Remove additional wall as required to relocate UV sleeve and louver opening. Remove floor finish and base as require.

Item #02
A1.3 Floor Plan:

1. Remove and relocate UV as shown on attachment A2.
2. Cut and patch CMU and brick as req. for new UV location and new larger louver opening.
3. Note revised detail references.
4. Provide new VCT flooring and base to patch floor at old location of UV. Colors to be selected by Architect from manufacturer's standard colors.

Item #03
A3.1 Exterior Elevations: Where large metal panels are shown in details 12, 13, 14, and 15 and size is larger than one panel can cover provide two equal size panels with vertical joint between panels.

Item #04
A 5.3 Building Details: See attachments A3, A4 and A5 for new and revised louver details 7, 8 and 9 on A5.1.

Item #05
A 6.1 Door Schedule: Doors 200-202 and 204-209 are not fire rated. Glass in door can be ¼" tempered.

Item #06:
P0.2 Plumbing Demolition Plan – Unit 200

1. PLUMBING DEMOLITION NOTES: Revise Note #9 to read as follows:
   "9 REMOVE EXISTING YARD CLEANOUT AND CONNECTING PIPING TO ACCOMMODATE FOR ADDITION. **FIELD VERIFY INVERT ELEVATIONS.**"
2. PLUMBING DEMOLITION NOTES: Revise Note #10 to read as follows:
   "10 REMOVE PORTION OF 6" SANITARY TO ACCOMMODATE FOR ADDITION. **FIELD VERIFY INVERT ELEVATIONS.**"

Item #07:
P1.2 Plumbing Plan – Unit 200

1. PLUMBING NOTES: Revise Note #3 to read as follows:
   "3 **ROUTE 6" STORM PIPING AS SHOWN. PROVIDE WCO IN NORTH EAST CORNER (EAST WALL) IN OFFICE #206.**

Item #08:
M0.2 HVAC Demolition Plan – Unit 200

1. Remove existing CH where shown on sketch M12.
2. HVAC DEMOLITION NOTES: Revise Note #10 to read as follows:
   "10 **REMOVE EXISTING FT INCLUDING PIPING, VALVES, HANGERS, INSULATION, ENCLOSURE AND CONTROLS. PROVIDE TEMPORARY CAPS FOR ALL OPEN HS & HR PIPING.**"
3. Change Demolition Note ~~#12~~ to **#2** as shown on sketch M12.
4. Move Demolition Notes where shown on sketch M12.

Item #09:
M0.3 HVAC Demolition Plan – Unit 300

1. HVAC DEMOLITION NOTES: Revise Note #9 to read as follows:
   "9 **REMOVE EXISTING HV INCLUDING DUCTWORK, STEEL SUPPORT FRAME AND CONTROLS. DISCONNECT EXISTING POWER WIRING BACK TO DISCONNECT. REMOVE HS & HR PIPING, VALVES, HANGERS, SUPPORTS AND CONTROLS. PROVIDE TEMPORARY CAPS FOR OPEN HS & HR PIPING. REMOVE OA DUCTWORK UP TO 60/32 DROP THROUGH ROOF.**"
2. Change Demolition Note ~~#16~~ to **#9** as shown on sketch M13.

Item #10:
M1.1 HVAC Plan – Unit 100: Locate RTU-101 VFD in Electrical Closet #116A.

Item #11:
M1.2 HVAC Plan – Unit 200
1. Remove NOTE #4 associated with EF-201. New EF-201 is to be located where shown including a **NEW Roof Opening** as shown on sketch M17.
2. Provide new ¾-inch HS & HR piping as shown on sketch M17. Piping shall be above new ceiling with a drop in Room #207 to connect to existing HS & HR piping.

Item #12:
M1.3 HVAC Plan – Unit 300
1. Provide and install a Wall mounted Sensor as shown on sketch M18.
2. HVAC NOTES: Add Note #10 to read as follows (See sketch M18):
   "10 EXTENT EXISTING HS & HR PIPING TO NEW UV LOCATION. MATCH EXISTING PIPE SIZE. PROVIDE NEW SHEET METAL ENCLOSURE TO COVER NEW PIPING. MATCH EXISTING SIZE, SHALE AND STYLE OF ENCLOSURE. FINISH TO MATCH EXISTING ENCLOSURE FINISH."

Item #13:
M3.2 Mechanical Details: Modify "DIRECT VENTING DETAIL" as shown on sketch M11.

Item #14:
M4.1 Sequence of Operation
1. HEATING HOT WATER SYSTEM SEQUENCE OF OPERATION Modify Sequence #11, G. to read as follows:
   "G. LOW HEATING **HOT** WATER SUPPLY TEMPERATURE ALARM."
2. VARIABLE AIR VOLUME BOX CONTROL Revise Sequence to read as follows:
   "1. IF THE ROOM TEMPERATURE DROPS BELOW ITS SET POINT, AS MEASURED BY THE ROOM SENSOR, THE BMS SHALL MODULATE THE VAV BOX DAMPER TOWARD THE CLOSED POSITION. THE BMS SHALL FURTHER CLOSE THE DAMPER TO A PREDETERMINED, FULLY ADJUSTABLE, MINIMUM POSITION AS THE SPACE TEMPERATURE CONTINUES TO DROP. ONCE THE MINIMUM DAMPER POSITION HAS BEEN REACHED, THE BMS SHALL CONTROL SPACE TEMPERATURE BY MODULATING A NORMALLY OPEN (50% OPEN) CONTROL VALVE (ROOM #213 – ENERGIZE AN ELECTRIC REHEAT COIL). THE REVERSE OPERATING SEQUENCE OCCURS UPON A RISE IN SPACE TEMPERATURE ABOVE THE ROOM SENSOR SET POINT."
   "2. A TEMPERATURE SENSOR. LOCATED IN THE VAV MAIN SUPPLY AIR DUCT, SHALL PROVIDE VAV BOX DISCHARGE AIR TEMPERATURE MONITORING CAPABILITIES."
3. AHU SEQUENCE OF OPERATION Delete this ~~Sequence~~ in its entirety and replace with the Sequence shown on sketch M14.

Item #15:
M4.2 Sequence of Operation: Remove this Drawing in its entirety and replace with attached M4.2.

Item #16:
ME1.1 Mechanical/Electrical Schedules: Remove "~~Cabinet Heater Schedule (Hot Water)~~" and replace with "**Cabinet Heater Schedule (Hot Water)**" as shown on sketch M15.

Item #17:
ME1.2 Mechanical/Electrical Schedules: Remove "~~Louver Schedule~~" and replace with "**Louver Schedule**" as shown on sketch M16.

Item #18
E1.1a Lighting and Power Plan: Disconnect power of AH-4 to allow replacement of motor of air handling unit AH-4. Replace associated overload protection heaters and fuses to match new motor (7.5HP) requirements and connect to existing power circuit.

Item #19
E1.2, E1.3 and E1.3a Lighting and Power Plans-Pricing for add Alternate L-E3: Provide one additional lighting switch for each space listed below to allow separate control of lighting fixtures at the teaching wall. All lighting in each space shall be controlled through toggle switches and occupancy sensors. Final lighting switching arrangement shall be confirmed and approved by the Owner:

1. E1.2: Special Ed 201, Drafting 202, Art 205, Fabrics 218, Home Living 220.
2. E1.3: Classroom 300, 302, 303, 304, 310, 311, 312, 314, and 315, Science 301, 313 and 351.
3. E1.3a: Classroom 326, 327, 329, 330, 334, 335, 337, 338, and 353, Science 328, 336 and 340.

Barton Malow
Design/Construction Services

Pre-Bid Meeting Minutes

Phase 1 Middle Schools (Boulan Park, Larson & Smith)

Troy Schools 2004 Bond Program
1301 Boyd
Troy, MI 48083

Project # 041049
Tel: 248-823-4631 Fax: 248-823-4672

Barton Malow Company

Phase 1 Middle Schools Pre-Bid Meeting 1

Date	Start	End	Next Meeting	Next Time	Prepared By	Company
2/23/2006	03:30 PM	05:00 PM			Kelly Stahley	Barton Malow Company

Purpose	Location	General Notes
Pre-Bid Meeting The purpose of this meeting is to discuss and review the project, scheduling, bidding documents, and answer questions before the bid due date for the Phase 1 - Three Middle Schools Remodeling & Addition (Boulan Park, Larson & Smith) BP #9361 project.	Boulan Park Middle School 3570 Northfield Parkway Troy, MI 48084	BID OPENING Tuesday, December 19, 2006 @ 3:00PM

Attended By	Non-Attendees
Barton Malow Company - Ian Morris	
Barton Malow Company - Leah Bossert	
Barton Malow Company - Kelly Stahley	

Item	Meeting Item Description	Resp	Cls'd
New Business			
1-1	Introduction of Barton Malow and Kingscott personnel. 2007 Superintendent - TBA 2008 Superintendent - Ian Morris	Leah Bossert (BMC)	Yes
1-10	Instruction to Bidders, Section 00200 in the Project Manual was reviewed. Bidders were reminded to take into account all portions of Instruction to Bidders and not just the areas highlighted herein. *If adequate time is not available to clarify the bid documents, bidders may present their interpretation/clarification of the bidding documents on the bid or in an attached letter. *Bidders should include the cost of any necessary permits. *Bidders must comply with the prevailing wage rate schedule issued in the Project Manual. *If a conflict exists regarding assignment of work between drawing notes and work scopes, the work scopes will take precedence. *All bidders were directed to review, in detail, coordination requirements. **THE LAST PRE-BID RFI WILL BE TAKEN ON WEDNESDAY, DECEMBER 6TH, 2006. NO EXCEPTIONS!!		Yes
1-13	Bid security in the form of a bond from a qualified surety, certified check or cashiers check in the amount of 5% of the bid amount will be required at the time of bid. This is described in the Project Manual, Section 00200.		Yes
1-14	This project IS NOT exempt from state sale tax and/or		Yes

Item	Meeting Item Description	Resp	Cls'd
New Business			
	use tax per Project Manual Section 00200.		
1-15	Description of the Work, Section 00210 was reviewed. The following items were highlighted: *If a conflict exists regarding assignment of work between drawing notes and work scopes, the work scopes will take precedence. *All bidders were directed to review, in detail, coordination requirements. **PLEASE REVIEW SECTION 00210 OF THE PROJECT MANUAL IN DETAIL. THERE HAVE BEEN MANY ADDITIONS TO SECTION 00210-1.05 REQUIREMENTS. ALSO REVIEW THE THREE PAGES FOLLOWING THIS SECTION FOR ADDITIONAL ITEMS TO BE INCLUDED IN WORK SCOPES.		Yes
1-16	Section 00230, Schedule and Phasing in the Project Manual was reviewed. A. Smith Computer Lab and Office Additions to begin on April 6, 2007 and end on December 3, 2007. B. Smith Building Renovations to begin June 25, 2007 and end on August 31, 2007. Summer work will happen throughout the building. C. Boulan Park & Larson Renovation Work (Units 200, 300 and 300a) to begin on June 25, 2007 and substantially complete on dates as noted in the construction schedule behind section 00230. D. Smith Existing Office Remodel to begin on December 21, 2007 and end on February 25, 2008. E. Boulan Park & Larson Renovation Work (Units 100, 100a and 200a) to begin on June 23, 2008 and end on August 22, 2008.		Yes
1-17	The Bid Form located in the Project Manual, Section 00400 was reviewed. Bidders were reminded to fill out COMPLETELY, use original signatures, and submit in triplicate. Pay special attention to the Familial Disclosure Statement. This MUST be included with the bid form. Please note section 00430 - Affidavit of Bidder. The school safety initiative should not be included in bid. This will be clarified in the Addendum.		Yes
1-18	Successful contractor will enter in a contract agreement with Troy School District. The contractual documents used shall be the AIA A101/CMA 1992 Edition.		No
1-19	If awarded contract, bidders insurance coverage will be as required by the Project Manual, Section 00620.		Yes
1-2	Leah chaired the Pre-Bid meeting. Bidding requirements and contract information was discussed in general. Emphasis was placed on administrative requirements, scope of work, and schedule. Questions generated during the meeting are responded to on sheets attached to these minutes. These minutes are distributed under cover of an addendum and become part of the contract documents. Work Scope Clarifications are also issued as an attachment to these minutes.		Yes
1-20	Troy School District will carry Builder's Risk Insurance. Any contractor making a claim against this insurance will be responsible for the $1,000 deductible.		No
1-21	Bidders were reminded to pay attention to Article 3.9		Yes

Item	Meeting Item Description	Resp	-	-	-	Cls'd

New Business

Superintendent and the qualifications therein.

1-22 Project Manual, Section 00810, On-Site Project Safety and Loss Control Program should be reviewed. The successful contractor will be required to submit the BMC Trade Contractor Safety Certificate upon entering into contract with Troy School District. Your EMR rating must be listed in your bid form. — Yes

1-23 Please review and understand Section 01140 of the Project Manual. Contractors must pay special attention to work around students/staff. After school hours = 3:30pm. Renovations throughout Smith OR noisy construction in the additions should be planned AFTER 3:30pm. — Yes

1-24 Section 01140 of the Project Manual. All contractors must obey the City of Troy Noise Ordinance. — Yes

1-25 Section 01250, Changes in the Work, was reviewed. The type of documents issued by the Architect include Addendum, Architect Supplemental Instructions (ASI), and Construction Change Directives (CCD) and will be issued by Barton Malow via Construction Change Directive-Notice to Proceed or Construction Change Directive-For Quotation Only and Subcontract Change Orders. — Yes

1-26 Pay application process, Section 01290 of the Project Manual. Pencil draft is due the 20th of each month and must be submitted prior to submission of final copies. Final copies (4) are due in the office by the 25th of every month. BMC will fax or call each contractor with comments or approval by noon on the 22nd of the month. In the event a Barton Malow Company (BMCO) team member does not comment on the pencil draft, final copies are still due on the 25th. Any changes necessary will be the responsibility of BMCO.
*The billing cycle ends on the 20th of the month. Please note: contractors are not to forecast billing through the end of the month.
*Please review Construction Payment Schedule included in Project Manual Section 01600 Forms for further clarification of billing cycle dates.
*A bond rider may be required if the contract increases by 25% of the original contract value. — Yes

1-27 All communication should happen via Barton Malow. As Construction Manager, BMCO will communicate with the Owner, Architect, Engineer and Contractors. — Yes

1-28 Section 01330 of the Project Manual was reviewed. A submittal schedule will be issued at the contractor Kick-Off Meeting. Material Compliance Certificates can be used for some specification sections. Refer to Section 01330 in the Project Manual. — Yes

1-29 If a contractor requires CAD backgrounds from the Architect, a cost will be incurred. A description of the calculation of costs can be found in Section 01330 (5.03-E) of the Project Manual. The contractor will need to contact Penny Mitchell at Kingscott for description of costs associated with CAD backgrounds.
*Please route the request form through the BMC office, attn: Kelly Stahley. — Yes

Item	Meeting Item Description	Resp	Cls'd
New Business			
1-3	All Bidders should possess the following bid documents: *Barton Malow Company Project Manual, dated November 20, 2006. *Conditions of the Contract and Specifications, dated November 8, 2006. *Construction Documents for Boulan Park Middle School (BP#9361) prepared by Kingscott Associates, Inc., dated November 8, 2006. *Construction Documents for Larson Middle School (BP#9361) prepared by Kingscott Associates, Inc., dated November 8, 2006. *Construction Documents for Smith Middle School (BP#9361) prepared by Kingscott Associates, Inc., dated November 8, 2006.		Yes
1-30	Section 01450, Testing and Inspection Services will generally be provided by Troy School District (through the services of TEC). Independent testing is required in some work scopes and must be included in the bid.		Yes
1-31	Section 01520, Temporary Construction Facilities and Controls of the Project Manual. All materials, debris, trash, soil, concrete, etc. generated due to construction, and not required, must be removed offsite and disposed of properly by the contractor.		Yes
1-32	Section 01530, Layout, in the Project Manual. Contractors are responsible for their work scope layout. BMCO will provide building corners at the Smith MS additions.		Yes
1-33	The following items were reviewed from section 01550, Clean Up and Final Cleaning, from the Project Manual. *Each contractor shall be responsible for direct, daily, weekly, and final cleanup of their work and the work of their subcontractors. *Each contractor must participate in weekly cleaning as detailed. *Each contractor must perform their final cleaning only after approval from the job superintendent.		Yes
1-34	Section 01600, Forms, of the Project Manual. Contractors were reminded to use the BMCO RFI form. Copies of the forms are included in the Project Manual. RFIs must be submitted to BMCO (via fax) at 248-823-4672 by the end of day on Wednesday, December 6th, 2006. All RFIs will be included in the Addendum. The addendum will be mailed on December 11, 2006 and should be received by each contractor by December 12, 2006. *Bids are due DECEMBER 19, 2006.		Yes
1-35	Prior to award of contract, each bidder will be required to be submit labor, equipment, and tool rates for all trades involved in their scope of work.		Yes
1-4	Description of the overall scope of the project which includes: A. Troy School District, Phase I - Three Middle Schools Remodeling & Addition (Boulan Park, Larson & Smith). The remodeling work (approx. 110,250 total building sq. ft. at each school) at all three middle schools consists of extensive duct rework and replacement, grid ceiling rework and replacement, as well as various classroom renovations and other system components throughout.		Yes

Item	Meeting Item Description	Resp	-	-	-	Cls'd

New Business

Both Boulan Park and Smith Middle Schools have site work, including demolition, new asphalt drives, curb, gutter, sidewalks and minimal landscaping. The two (2) Smith Middle School additions consist of a 1,761 sq. ft. office addition and a 990 sq. ft. computer lab addition.
B. Remodel work at Boulan Park and Larson will happen over the summers of 2007 and 2008 - ½ of each building, each summer. The Smith additions will begin in spring of 2007 and continue through the summer, to finish in December of 2007. Smith remodel will happen in the summer of 2007 and continue through February 2008. Sitework at Boulan Park and Smith will happen in the summer of 2007, but restoration around the Smith additions will complete in June 2008.
C. Note: ALL three (3) middle schools have simultaneous schedules. Contractors will be responsible for completing ALL 3 middle schools by the completion dates listed above and stated in the construction schedule behind the Section 00230.

1-6	Receipt of Bids - Sealed bids will be received by Troy School District on Tuesday, December 19, 2006 at 3:00pm, local time. Local time will be established by the clock located in the Rankin Building. Bids will be publicly opened and read aloud promptly at 3:00pm in the Rankin Building.		Yes
1-7	Bids will be received at 1140 Rankin Dr. in Troy, MI.		Yes
1-8	Troy School District will provide and maintain temporary toilet facilities for the construction of the project and dumpsters for those work scopes as stated. Please review work scopes. The Smith Middle School additions shall be enclosed prior to November 1, 2007, using heat system as designated.		Yes

These minutes constitute our understanding of the proceedings of the meeting, and it will be considered correct unless the writer is notified within ten (10) days of the date of distribution.

Sincerely,

Leah Bossert
Project Manager

cc: All Attendees, File

Meeting Sign In Sheet

by Meeting

041049 - Troy Schools 2004 Bond Program
1301 Boyd
Troy, MI 48083

Tel: 248-823-4631 Fax: 248-823-4672

Phase 1 Middle Schools Pre-Bid Meeting 1

Date	Start	End	Next Meeting	Next Time	Prepared By	Company
2/23/2006	03:30 PM	05:00 PM			Kelly Stahley	Barton Malow Company

Purpose	Location	General Notes
Pre-Bid Meeting The purpose of this meeting iss to discuss and review the project, scheduling, bidding documents, and answer questions before the bid due date for the Phase 1 - Three Middle Schools Remodeling & Addition (Boulan PArk, Larson & Smith) BP #9361 project.	Boulan Park Middle School 3570 Northfield Parkway Troy, MI 48084	BID OPENING Tuesday, December 19, 2006 @ 3:00PM

Attended By

Initials	Company - Contact Name	e-Mail Address	Telephone
KS	Barton Malow Company - Kelly Stahley	kelly.stahley@bartonmalow.com	248 823-4631
LSB	Barton Malow Company - Leah Bossert	leah.bossert@bartonmalow.com	248 823-4631

ABC Paving	Tony Dobeck		734.671.2120
Kingscott Assoc	John Notewarze		
Hatzel & Buehler	Chris Kolito		734-466-8700
Pontiac Ceiling & Partition	Jeff Willenbrock		248-332-0252
John E Green Co	Don Sutton	donsutton@johnegreen.com	313-852-3397
[redacted]			
Conventional Cpt.	Howard Shock		586-739-6090 739-5466
BMC	Ian C Morris		248-~~563-9059~~ 640-0157
Heights Heating	Bob Gallant		248-373-5431 FAX -4175
Andrew Elect. Co.	Andrew An		248-362-1868
Bob Culver	Dee Cramer	(bobc@deecramer.com)	(810) 579-5000
Nick Keeler	Dee Cramer	(Nickk@deecramer.com)	(P) 810 579-5000 (C) (810) 579-2667
Joe Hampton	Union Const Services		313-824-3330 313-824-6900
Steve Hall	Johnson + Wood		810 715 0700

SECTION 00220
WORK SCOPE

BID CATEGORY – Site Construction 2.1

The Work of this Bid Category includes but is not limited to providing all labor, equipment, materials, scaffolding, hoisting and incidentals to complete all in accordance with the Contract Documents and applicable codes. All Work is to be performed as shown on the plans and specified in the following technical Specification sections:

Section	Name
01732	*Selective Demolition*
02230	Site Clearing
02300	Earthwork
	Geotechnical Soils Report
02630	Storm Drainage
02741	Hot Mix Asphalt Paving
02751	Cement Concrete Pavement
02840	Walk, Road and Parking Appurtenances
02920	Lawns and Grasses
02930	Exterior Plants

In addition to the above, this Bid Category requires adherence to but not limited to the Bidding Documents, the Bidding and Contract requirements and Division 1 General Requirements of the Project Manual and coordination with various other technical Specifications interfacing with this Work. The Bidder is advised to review the Work descriptions of the other Bid Categories as set forth in Section 00210 of the Project Manual so as to not misunderstand scope responsibilities.

THE SCOPE OF WORK IS TO INCLUDE, but is not limited to, the following items:

1. Reference work scope assignments designated to the Architectural Demolition Notes, which can be found behind Project Manual section 00210 – Description of the Work/Special Provisions. These work scope assignments are to be included in your base bid.

2. Furnish and install temporary construction road at Smith Middle School, for both additions. This includes stripping the ground surface at location of road. Temporary road is to consist of 6" 1x3 stone aggregate on geo-textile fabric 16'-0" wide. Remove temporary construction road prior to final restoration and restore site to original condition. This includes removal and replacement of concrete sidewalks and asphalt paving where temporary roads cross existing walks or drives.

3. This contractor is responsible to maintain and keep all site utilities/systems in working order that are within the work limits. Site utilities should be identified and marked by this contractor to proactively prevent interruptions in service. Employ the service of an independent contractor (such as **Power Plus – 248-344-0200**) to identify and mark underground services. Provide as-built drawings to BMC for distribution to other trades.

4. Perform all layouts as required to complete the work of this contract.

5. This contractor is responsible to have on-site supervision by this contractor for all sub-contractors for any work occurring within this work scope.

6. Temporary fencing is not the responsibility of this contractor. Permanent fencing is the responsibility of this contractor.

7. This contractor is responsible for all site demolition, clearing, grubbing and removal of existing pavement. Remove all spoils generated from this contractor's work.

8. New drive throats must be *constructed* per City of Troy requirements. It is this contractor's responsibility to ensure drive throats are installed correctly and per City of Troy specifications.

9. ADA Tactile Detectable Warning Strips are the responsibility of this contractor.

10. Perform all rough and finish grading. Establish sub-grade for building pad at both additions (2). Place topsoil and seed where shown on drawings.

11. Furnish and install all landscaping as specified and shown.

12. Re-grade and establish building pad elevations following completion of foundation work.

13. This contractor is responsible to have all necessary equipment on site for proof roll(s).

14. Furnish and install all asphalt paving, concrete paving, concrete sidewalks, concrete curbs and gutters. Re-grade and dress all existing areas of stone base and sub base prior to placement of wearing course and curbs.

15. Control dust, created due to the execution of work in this contract, and maintain clean roadways entering into the campus where all contractors, suppliers, and deliveries will travel.

16. Perform all dewatering necessary by any contractor to maintain the project schedule.

17. Furnish and install all necessary site signage per *plans and specifications.*

18. Provide 48-hour notice to the Construction Manager prior to placement of backfill, concrete and asphalt so the testing laboratory can be scheduled to test these materials. This contractor will be responsible for the cost of emergency testing services if the 48-hour notice is not given. The contractor's on-site foreman shall be present during testing and field reviews conducted by various inspection agencies.

19. Coordinate with the site superintendent regarding a designated wash out area. It will be this contractor's responsibility to remove their spoils at the appropriate time.

20. This contractor will be responsible to install, maintain, and remove a firm, properly graded, and drained area for the steel erector. This area must be readily accessible to the work and have adequate space for the *safe* storage of material and the safe operation of construction activities. The area shall be stripped of topsoil, and cut to a level suitable to install geo textile fabric, a large aggregate base, and a topping of 21AA. Coordinate exact location with Barton Malow. Total

area shall equal 50,000 sq. ft. This contractor will remove all temporary materials from site and restore area to existing grades utilizing suitable backfill, topsoil, and seeding.

21. Furnish and install all underground piping and structures. It is this contractor's responsibility to bring all underground piping within 5'-0" of the building.

22. Furnish, install, maintain and replace if needed, all erosion control measures and protection barriers, tree protection and drainage structure protection that is in place and is required by authorities having jurisdiction, until City of Troy acceptance is granted, erosion control measures are this contractor's responsibility.

23. Reference Geo Tech report and notes on S1.1 pertaining to soil conditions. Imported engineered fill shall be furnished and placed beneath building additions and parking lots.

24. This contractor shall provide a soil erosion operator and comply with the Environmental Protection Agency's storm water regulations and the Michigan Department of Environmental Quality's National Pollutant Elimination System. This includes, but is not limited to, inspection of the soil erosion and sedimentation control practices once a week and within 24 hours of a rainfall. A written report including photographs of the inspection and the maintenance of a log of written reports is requested. The inspections must start with the commencement of the construction schedule and continue until the site is completely stabilized and a Notice of Termination is filed with the M.D.E.Q. Copies of the reports must be forwarded monthly to BMC.

25. Dumpsters will NOT be provided by the owner for this category. Include use and disposal of dumpsters in this bid.

26. *Control dust, created due to the execution of work in this contract, and maintain clean roadways entering into the campus where all contractor's suppliers deliveries will travel. Include weekly sweeping company (such as **Rolar** in Troy) to mechanically sweep Donaldson Street. Include entire Smith, Boulan Park, and Larson parking lot sweep on or about August 27, 2007.*

27. Final cleaning and/or brooming of surfaces must be performed prior to owner turnover.

28. Include an allowance of $15,000, for maintenance of stone paths at Smith Middle School, to be used at Barton Malow's discretion. Any and all time tickets pertaining to this allowance are to be signed by Barton Malow and submitted on a daily basis. No time tickets will be accepted unendorsed. Allowance when billed shall be exclusive of *mark-ups* and fees. Include these costs in your base bid.

29. *Include an allowance of $3,000 to cover the cost of permit fees.*

EXCLUDED FROM THIS CONTRACTOR'S WORK is:

1. **N/A**

SPECIAL CONSIDERATIONS:

1. This Bidder is required to submit unit prices identified in the Bidding Documents which pertain to their work. These prices must be separate from their base bid on the Bid Proposal Form as described in Section 0200 Instructions to Bidders.

2. All work under this scope shall comply with proper trade jurisdictions, even if it is necessary to assemble composite crews or subcontract to appropriate trades.

3. The special provisions outlined in **Section 00210 Description of the Work** form a part of this bid category work description and apply to this Bidder's scope of work.

4. Take special precautions when working near occupied spaces with regards to fumes, noise and pollution levels. Some work may be necessary to be performed after the school day is over at this contractor expense.

5. Any in-place temporary protection that requires any disassembly to perform work, etc. must be replaced by contractor installing new work. Temporary protection must be restored to condition intended.

6. Section **00410, Familial Disclosure Statement, must** be filled out and included with your Bid for your Bid to be accepted.

END OF SECTION 00220 – SITE CONSTRUCTION 2.1

SECTION 00220
WORK SCOPE

BID CATEGORY – Concrete 3.1

The work of this bid category includes but is not limited to providing all labor, equipment, materials, scaffolding, hoisting and incidentals to complete all concrete in accordance with the specifications, drawings and applicable codes. All work is to be performed as shown on the plans and specified in the following technical specification sections:

Section	Name
01731	Cutting and Patching
01732	Selective Demolition
03300	Cast in place concrete
03542	Hydraulic-Cement-Based Underlayment
07210	Building Insulation
07920	Joint Sealants

In addition to the above, this bid category includes but is not limited to the Bidding Documents, the Bidding and Contract requirements and Division 1 General Requirements of the Project Manual and various other Technical Specifications interfacing with this work. The bidder is advised to review the work descriptions of the other categories so as to not misunderstand scope responsibilities.

THE SCOPE OF WORK IS TO INCLUDE, but is not limited to, the following items:

1. Reference work scope assignments designated to the Architectural Demolition Notes, which can be found behind Project Manual section 00210 – Description of the Work/Special Provisions. These work scope assignments are to be included in your base bid.

2. Perform all layout necessary to complete this contractor's work. It is this contractors responsibility to identify and locate site utilities prior to excavation of footings.

3. *Excavate for and place concrete including but not limited to floor slabs, foundations, footings, entry stoops, stairs and equipment pads as shown on drawings. Replace backfill at excavations and remove spoils off site.*

4. Patch floors where existing walls are shown to be removed.

5. Install exterior perimeter insulation at foundations.

6. Furnish and install all reinforcement steel as detailed in this contractors work.

7. Sub-grade will be established inside the building footprint + or – 4". Re grade below slabs, and re-establish sub-grade elevation. Furnish and install compacted granular base material.

8. Provide 48-hour notice to the Construction Manager prior to the placement of backfill or concrete so the testing laboratory can be scheduled to test these materials. This contractor will be responsible for the cost of emergency testing services if the 48-hour notice is not given. The contractor's on-site foreman shall be present during testing and field reviews conducted by various inspection agencies.

9. Install all anchor bolts, leveling/anchor plates, and mechanical/electrical sleeves in your work. These items are to be provided by 5.1 – Steel and 15.1/16.1 – Mechanical/Electrical contractors respectively. Coordinate with necessary trades for placement of such items.

10. *This contractor is required to provide written verification of correct anchor bolt placement to BMC with in 3 days of foundations being complete. This verification shall be performed and certified by a reputable and licensed surveyor.*

11. Coordinate with the site Superintendent regarding a designated wash out area. It will be this contractor's responsibility to remove their spoils at the appropriate time.

12. Re-grade areas disturbed by work activities of this category within the building footprint.

13. Dumpsters indicated to be provided by the Owner in the General Requirements and Supplementary Conditions WILL NOT be provided for this category.

14. Provide daily clean-up, according to Barton Malow standards, including daily removal of all materials and debris related to this category. If daily clean-up is not performed, the Construction Manager will provide his labor to complete the clean-up and the appropriate contractor will be back-charged.

15. Final cleaning must be included as part of this base bid.

16. *Include an allowance of $3,000 to be used at Barton Malow's discretion. Any and all time tickets pertaining to this allowance are to be signed by Barton Malow and submitted on a daily basis. No time tickets will be accepted unendorsed. Allowance when billed shall be exclusive of mark-ups and fees. Include these costs in your base bid.*

EXCLUDED FROM THIS CONTRACTOR'S WORK is:

1. **N/A**

SPECIAL CONSIDERATIONS:

1. The special provisions outlined in **Section 00210 Description of the Work** form a part of this bid category work description and apply to this Bidder's scope of work.

2. All work under this scope shall comply with proper trade jurisdictions, even if it is necessary to assemble composite crews or subcontract to appropriate trades.

3. This Bidder is required to submit alternate prices identified in the Bidding Documents which pertain to their work. These alternate prices must be separate from their base bid on the Bid Proposal Form as described in Section 00200 Instructions to Bidders.

4. Take special precautions when working near occupied spaces with regards to fumes, noise and pollution levels. Some work may be necessary to be performed after the school day is over at this contractor's expense.

5. Any in-place temporary protection that requires any disassembly to perform work, etc. must be replaced by contractor installing new work. Temporary protection must be restored to condition intended.

6. Section **00410, Familial Disclosure Statement**, **must** be filled out and included with your Bid for your Bid to be accepted.

END OF SECTION 00220 – CONCRETE 3.1

SECTION 00220
WORK SCOPE

BID CATEGORY – Masonry 4.1

The Work of this Bid Category includes but is not limited to providing all labor, equipment, materials, scaffolding, hoisting and incidentals to complete all in accordance with the Contract Documents and applicable codes. All Work is to be performed as shown on the plans and specified in the following technical Specification sections:

Section	Name
01731	Cutting and Patching
01732	Selective Demolition
04720	Cast Stone
04810	Unit Masonry Assemblies
07210	Building Insulation
07841	Through-Penetration Firestop Systems
07842	Fire-Resistive Joint Systems
07920	Joint Sealants

In addition to the above, this Bid Category requires adherence to but not limited to the Bidding Documents, the Bidding and Contract requirements and Division 1 General Requirements of the Project Manual and coordination with various other technical Specifications interfacing with this Work. The Bidder is advised to review the Work descriptions of the other Bid Categories as set forth in Section 00210 of the Project Manual so as to not misunderstand scope responsibilities.

THE SCOPE OF WORK IS TO INCLUDE, but is not limited to, the following items:

1. Reference work scope assignments designated to the Architectural Demolition Notes, which can be found behind Project Manual section 00210 – Description of the Work/Special Provisions. These work scope assignments are to be included in your base bid.
2. Perform all layout and engineering associated with this work necessary to perform a complete job using established building lines, control points, and elevations. It is this contractor's responsibility to field verify the accuracy of survey points provided, prior to job startup/mobilization.
3. Tooth in any areas necessary pertaining to the tie in of the addition(s) to the existing building or for new and/or larger openings necessary in the existing building.
4. Patch existing masonry surfaces to match existing where affected by demolition and / or shown on demolition drawings.
5. Provide CMU infill where existing windows, doors, louvers, etc. have been removed. Tooth in brick to match existing.

6. Unload, store, protect, and install metal fabrications provided by 5.1 - Steel and 6.1 - Carpentry contractors. Coordinate placement of steel plates with 5.1 - Steel contractor.

7. Furnish and install all building damproofing shown on masonry walls.

8. Furnish and install building insulation including all spray foam insulation, at masonry walls. Category 6.1 – Carpentry is responsible for all insulation behind metal wall panels.

9. Install all miscellaneous structural steel beams and lintels, plates, steel reinforcement miscellaneous steel supports and bond beams required to support masonry. Include all welding, bolting, anchorages etc.

10. This contractor is responsible for all firestopping on existing and new CMU walls called out on plans, per UL listing standards in the specifications. See code compliance sheets in the drawings for further clarification.

11. Furnish and install all rebar (including horizontal, vertical, and positioning accessories) necessary for CMU walls.

12. Install hollow metal door and window frames and associated anchors in all masonry walls.

13. Install sleeves furnished by other trades.

14. Furnish and install bond breaker strips.

15. Furnish and install sealant within exterior and interior masonry wall construction and when masonry abuts an existing dissimilar surface.

16. Provide all necessary barricades, safety and warning devices until this work is safe and complete.

17. Provide hoisting, scaffolding, and lifting equipment necessary for the execution of this work.

18. Perform brick washing in accordance with specifications and protect adjacent materials to prevent damage to finishes from the cleaning process. Clean block-walls to provide a smooth surface suitable for paint. Condition of interior block must be left in a condition suitable for painting.

19. 15.1 - Mechanical will provide layout drawings for through wall penetrations of mechanical systems to 4.1 - Masonry at least two weeks prior to block installation in that unit. Any layout drawings not provided in this time frame may result in a back charge to the Mechanical contractor.

20. Cutting of walls for installation of electrical / technology boxes provided by others are this contractor's responsibility within masonry walls. The masonry, electrical and carpentry contractors will share the responsibility and any cost incurred for adjustment to ensure a square/plumb quality finished product.

21. Coordinate with the site Superintendent regarding a designated wash out area. It will be this contractor's responsibility to remove their spoils at the appropriate time.

22. Cutting and welding operations shall cease 2 hours prior to the close of construction each day to minimize the risk of undetected smoldering fire. Contractors performing such operations shall have within their immediate work area, ABC-type fire extinguisher(s). Only wet cutting will be permitted.

23. Furnish and install all joint systems within masonry walls and where masonry walls meet existing surfaces.

24. Dumpsters indicated to be provided by the Owner in the General Requirements and Supplementary Conditions WILL NOT be provided for this category.

25. Provide daily clean-up according to Barton Malow standards, including daily removal of all materials and debris related to this category. If daily clean-up is not performed the Construction Manager will provide labor to perform the clean-up and the appropriate contractor will be back-charged.

26. Final cleaning and/or brooming must be included in base bid.

27. Include $3,000 allowance to be used as directed by BMC. Any and all time tickets pertaining to this allowance are to be signed by Barton Malow and submitted on a daily basis. No time tickets will be accepted unendorsed. Allowance when billed shall be exclusive of *mark-ups* and fees. Include these costs in your base bid.

EXCLUDED FROM THIS CONTRACTOR'S WORK is:

1. **N/A**

SPECIAL CONSIDERATIONS:

1. All work under this scope shall comply with proper trade jurisdictions, even if it is necessary to assemble composite crews or subcontract to appropriate trades.

2. The special provisions outlined in **Section 00210 Description of the Work** form a part of this bid category work description and apply to this bidder's scope of work.

3. This Bidder is required to submit alternate prices identified in the Bidding Documents which pertain to their work. These alternate prices must be separate from their base bid on the Bid Proposal Form as described in Section 00200 Instructions to Bidders.

4. Take special precautions when working near occupied spaces with regards to fumes, noise and pollution levels. Some work may be necessary to be performed after the school day is over at this contractor expense.

5. Any in-place temporary protection that requires any disassembly to perform work, etc. must be replaced by contractor installing new work. Temporary protection must be restored to condition intended.

6. Section **00410, Familial Disclosure Statement, must** be filled out and included with your Bid for your Bid to be accepted.

END OF SECTION 00220 – MASONRY 4.1

SECTION 00220
WORK SCOPE

BID CATEGORY – Structural Steel 5.1

The Work of this Bid Category includes but is not limited to providing all labor, equipment, materials, scaffolding, hoisting and incidentals to complete all in accordance with the Contract Documents and applicable codes. All Work is to be performed as shown on the plans and specified in the following technical Specification sections:

Section	Name
01731	Cutting and Patching
05120	Structural Steel
05210	Steel Joists
05310	Steel Deck

In addition to the above, this Bid Category requires adherence to but not limited to the Bidding Documents, the Bidding and Contract requirements and Division 1 General Requirements of the Project Manual and coordination with various other technical Specifications interfacing with this Work. The Bidder is advised to review the Work descriptions of other Bid Categories as set forth in Section 00210 of the Project Manual so as to not misunderstand scope responsibilities.

THE SCOPE OF WORK IS TO INCLUDE, but is not limited to, the following items:

1. Reference work scope assignments designated to the Architectural Demolition Notes, which can be found behind Project Manual section 00210 – Description of the Work/Special Provisions. These work scope assignments are to be included in your base bid.

2. Perform all lay-out and supply all materials as shown and required by the drawings, specifications and job conditions as required to complete the work of this contract.

3. This contractor will cut all roof penetrations in steel decking as laid out by the carpentry, mechanical, and/or electrical contractor.

4. Provide on site supervision by this trade for all subcontractors of this trade.

5. Provide and maintain ladders necessary for this contractors work. It is this contractor's responsibility to relocate ladders if necessary.

6. Furnish and install roof drain pans and associated framing.

7. Furnish anchor bolts to *3.1 - Concrete* contractor. Before steel erection obtain test reports*/survey* on anchor bolts from *3.1 - Concrete* contractor to verify that test results meet ASTM standards.

8. Furnish anchor/leveling plates to 3.1 – Concrete contractor for installation by 3.1 – Concrete contractor.

9. Prime paint, including touch-up, on scratched or blemished spots after erection is complete. This includes touch-up of field welds and bolting.

10. Any utility disturbed by this contractor shall be repaired and placed in service immediately and the cost associated to do so will be this contractor's responsibility.

11. This project will enforce the use of 100% fall protection for all exposures 6 feet or greater for all workers (including connecting, detailing, and decking).

12. Cutting and welding operations shall cease 2 hours prior to the close of construction each day to minimize the risk of undetected smoldering fire. Contractors performing such operations shall have within their immediate work area, ABC-type fire extinguisher(s).

13. Furnish and install ladders at each roof hatch. Ladders must conform to building codes. Furnish and install roof opening framing as shown and for roof hatch as necessary.

14. Provide all necessary barricades, safety, and warning devices for this work. Including all welded metal fabrications with metal cables.

15. This contractor shall plan on timely installation and removal of debris from lay-down area and site.

16. Contractor is responsible for de-mudding of vehicles prior to leaving the construction site.

17. All stored materials must be kept on dunnage and off the ground.

18. *Provide and maintain, while on site, MIOSHA approved temporary guardrails and perimeter cables.* Plan to return to the site on 2 separate occasions for repairs to in-place guardrails and/or perimeter cables. Include in this bid and plan to remove temporary guardrails and perimeter cables on different days, on each unit, as directed by BMC.

19. Provide daily clean-up, according to Barton Malow standards, including daily removal of all materials and debris related to this category. If daily clean-up is not performed, the Construction Manager will provide his labor to complete the clean-up and the appropriate contractor will be back-charged.

20. Final cleaning of finish installations must be included within this bid.

21. Include a $1,000 allowance to be used for miscellaneous steel as directed by BMC. Any and all time tickets pertaining to this allowance are to be signed by Barton Malow and submitted on a daily basis. No time tickets will be accepted unendorsed. Allowance when billed shall be exclusive of mar-ups and fees. Include these costs in your base bid.

EXCLUDED FROM THIS CONTRACTOR'S WORK is:

1. **N/A**

SPECIAL CONSIDERATIONS:

1. All work under this scope shall comply with proper trade jurisdictions, even if it is necessary to assemble composite crews or subcontract to appropriate trades.

2. The special provisions outlined in **Section 00210 Description of the Work** form a part of this bid category work description and apply to this bidder's scope of work.

3. This Bidder is required to submit alternate prices identified in the Bidding Documents which pertain to their work. These alternate prices must be separate from their base bid on the Bid Proposal Form as described in Section 00200 Instructions to Bidders.

4. Take special precautions when working near occupied spaces with regards to fumes, noise and pollution levels. Some work may be necessary to be performed after the school day is over at this contractor expense.

5. Any in-place temporary protection that requires any disassembly to perform work, etc. must be replaced by contractor installing new work. Temporary protection must be restored to condition intended.

6. Section **00410, Familial Disclosure Statement, must** be filled out and included with your Bid for your Bid to be accepted.

END OF SECTION 00220 – STRUCTURAL STEEL 5.1

SECTION 00220
WORK SCOPE

BID CATEGORY – Carpentry and Acoustical Ceilings 6.1

The Work of this Bid Category includes but is not limited to providing all labor, equipment, materials, scaffolding, hoisting and incidentals to complete all **carpentry, doors and hardware, drywall, ceilings and miscellaneous as noted** in accordance with the Contract Documents and applicable codes. All Work is to be performed as shown on the plans and specified in the following technical Specification sections:

Section	Name
01230	Alternate
01731	Cutting and Patching
01732	Selective Demolition
05400	Cold-Formed Metal Framing
06105	Miscellaneous Carpentry
07210	Building Insulation
07720	Roof Accessories
07841	Through-penetration Firestop Systems
07842	Fire-Resistive Joint Systems
07920	Joint Sealants
08111	Standard Steel Doors and Frames
08211	Flush Wood Doors
08311	Access Doors and Frames
08710	Door Hardware
09111	Non-Load Bearing Steel Framing
09250	Gypsum Board
09511	Acoustical Panel Ceilings
10101	Visual Display Surfaces
10155	Toilet Compartments
10505	Metal Lockers
10520	Fire-Protection Specialties
11132	Projection Screens
12355	Institutional Casework

In addition to the above, this Bid Category requires adherence to but not limited to the Bidding Documents, the Bidding and Contract requirements and Division 1 General Requirements of the Project Manual and coordination with various other technical Specifications interfacing with this Work. The Bidder is advised to review the Work descriptions of the other Bid Categories as set forth in Section 00210 of the Project Manual so as to not misunderstand scope responsibilities.

THE SCOPE OF WORK IS TO INCLUDE, but is not limited to, the following items:

1. Reference work scope assignments designated to the Architectural Demolition Notes, which can be found behind Project Manual section 00210 – Description of the Work/Special Provisions. These work scope assignments are to be included in your base bid.
2. Furnish and install items listed in specification sections above.

3. Furnish and install all rough carpentry, finish carpentry, wood treatments, wood blocking, sleepers, nailers, curbs, framing, and plywood indicated on the drawings. Include all window blocking and roof blocking. Include casework/equipment blocking. Coordinate with appropriate supplier/installer.
4. Furnish and receive all wood doors, hollow metal frames, and door hardware. Store doors and frames prior to installation including insulated panels and louvers in doors. Doors and frames are to be free of rust and debris upon installation. Contractor will be responsible for removing any rust that may appear on the steel doors and frames. Perform all trouble-shooting and correction of hardware problems after owner occupancy for the duration of the warranty period. *Shake out and place material in respective unit upon delivery.*
5. This contractor is responsible for installation of all new and re-used ceiling tiles. Coordinate with 15.1 – Mechanical contractor.
6. Furnish and install all access panels in gypsum walls and/or ceilings as shown on plans. Install access panels provided by mechanical and electrical trades.
7. *Plan to lower one (1) projection screen in each classroom.*
8. *This contractor is responsible to increase wall support of all frames (door and window) if existing framing is not adequate.*
9. Lock cylinders for demolished doors that are to be replaced are to be salvaged, labeled, and turned over to the Owner.
10. Specification section 08710-1.4-D shall be superseded by the following: Keyway for all cylinders shall be provided per the Owner's schedule. Keying shall be by contractor, per the direction of the Owner.
11. Furnish and install all institutional casework required for a complete installation. All final adjustments will be the responsibility of this contractor.
12. Casework cannot be stored on site. Must be stored at a bonded warehouse or trailer until needed, *per the schedule.*
13. This contractor is responsible for the covering of casework and countertops for protection against damage. Protection shall be cardboard or masonite.
14. *Coordinate the installation of all mechanical and electrical fixtures and devices, associated with casework, with the appropriate trades. Provide detailed rough-in drawings within twenty (20) calendar days of contract award.*
15. Layout of piping to be reviewed by the casework contractor to avoid unnecessary cutting of casework. Piping layout on drawings is diagrammatic only.
16. The electrical and carpentry contractor will share the responsibility for a square/plumb installation of all electrical and technology boxes in gypsum wall assemblies. Any cost incurred to adjust boxes to ensure a quality finished product will be shared by these contractors
17. Z-girts and wall angle necessary for panel installation must be installed before spray foam insulation installation. Coordinate with 8.1 – Glazing & Metal Wall Panel contractor.

18. Furnish and maintain all necessary barricades, safety and warning devices for this work.

19. Furnish and install gypsum ceiling and soffit assemblies complete.

20. Furnish and install toilet compartments and provide all final adjustments. Field verify dimensions, before ordering, to ensure proper fit. It is the intent of the Architect, and the responsibility of this contractor, to reuse or cover/patch existing anchor holes.

21. Furnish and install building insulation as it relates to this contractors work. 4.1 - Masonry is responsible for building insulation at masonry walls, including spray foam insulation at masonry walls. 6.1 - Carpentry is responsible to replace all insulation behind existing wall panels.

22. Protect existing surfaces in rooms, while performing this contractor's work. Provide protection of this contractors installed work until Owner turnover. If any adjacent surfaces are damaged it will be the sole responsibility of the contractor at fault to completely repair and replace all damaged construction to the satisfaction of the owner, construction manager and architect.

23. Furnish and install all acoustical lay-in assembly materials.

24. Refer to code compliance plans (A0.0). Furnish and install firestopping assemblies at top of all drywall assembled walls. Ratings of assemblies shall meet UL #U905 standards.

25. Furnish and install all joint systems where this work abuts existing surfaces as shown. Caulk all products installed by this contractor where required for work of this work category.

26. Furnish and install one hour temporary walls with frame and locking door between existing building and new construction in two locations as directed by OFS and/or BMC. Patch and repair existing surfaces as needed upon temporary wall removal; *at Smith MS only.*

27. Field verify all openings, provide and install all trim, spaces and blanks necessary to properly install a complete locker system.

28. This project will enforce the use of 100% fall protection for all exposures 6 feet or greater for all workers.

29. Furnish and maintain dust mats at all construction area entrances and exits on both sides of doors. Clean as needed.

30. Final cleaning must be included as part of this base bid.

31. *Furnish and install temporary floor protection (either Masonite or Luan) at all carpeted work areas at each school.*

32. *Furnish and install 2,000 lineal feet of 3" X 3" aluminum break metal. Gage and finish to match new grid.*

33. *Include a $12,000 allowance to be used on a time and material basis as directed by BMC. Unused portions will be deducted from contract. Any and all time tickets pertaining to this allowance are to be signed by Barton Malow and submitted on a daily basis. No time tickets will be accepted unendorsed. Allowance when billed shall be exclusive of mar-ups and fees. Include these costs in your base bid.*

EXCLUDED FROM THIS CONTRACTOR'S WORK is:

1. **N/A**

SPECIAL CONSIDERATIONS:

1. All work under this scope shall comply with proper trade jurisdictions, even if it is necessary to assemble composite crews or subcontract to appropriate trades.

2. The special provisions outlined in **Section 00210 Description of the Work** form a part of this bid category work description and apply to this bidder's scope of work.

3. This Bidder is required to submit alternate prices identified in the Bidding Documents which pertain to their work. These alternate prices must be separate from their base bid on the Bid Proposal Form as described in Section 00200 Instructions to Bidders.

4. Take special precautions when working near occupied spaces with regards to fumes, noise and pollution levels. Some work may be necessary to be performed after the school day is over at this contractor expense.

5. Any in-place temporary protection that requires any disassembly to perform work, etc. must be replaced by contractor installing new work. Temporary protection must be restored to condition intended.

6. Section **00410, Familial Disclosure Statement, must** be filled out and included with your Bid for your Bid to be accepted.

END OF SECTION 00220 – CARPENTRY AND ACOUSTICAL CEILINGS 6.1

SECTION 00220
WORK SCOPE

BID CATEGORY – Roofing 7.1

The Work of this Bid Category includes but is not limited to providing all labor, equipment, materials, scaffolding, hoisting and incidentals to complete all in accordance with the Contract Documents and applicable codes. All Work is to be performed as shown on the plans and specified in the following technical Specification sections:

Section	Name
01731	Cutting and Patching
01732	Selective Demolition
07210	Building Insulation
07552	Modified Bituminous Membrane Roofing
07710	Manufactured Roof Specialties
07720	Roof Accessories
07841	Through Penetration Firestop Systems
07842	Fire-Resistive Joint Systems

In addition to the above, this Bid Category requires adherence to but not limited to the Bidding Documents, the Bidding and Contract requirements and Division 1 General Requirements of the Project Manual and coordination with various other technical Specifications interfacing with this Work. The Bidder is advised to review the Work descriptions of the other Bid Categories as set forth in Section 00210 of the Project Manual so as to not misunderstand scope responsibilities.

THE SCOPE OF WORK IS TO INCLUDE, but is not limited to, the following items:

1. Reference work scope assignments designated to the Architectural Demolition Notes, which can be found behind Project Manual section 00210 – Description of the Work/Special Provisions. These work scope assignments are to be included in your base bid.

2. Furnish and install a complete roofing system as specified. Furnish and install any insulation and/or components as detailed or required for a complete positive draining roof system.

3. Install and level all roof mounted curbs. Layout is done by 15.1 – Mechanical and/or 16.1 - Electrical trades if the curb is for their equipment.

4. Furnish and install flashing around curbs, pipe sleeves, roof sumps, roof hatches, and any penetrations and/or ladders as shown on plans. Coordinate with mechanical/electrical contractor(s) for proper adjustments.

5. Perform all demolition and removal of existing roofing systems, coping and flashing associated *at new tie-in locations*. Provide a water tight patch until final roofing activities can be completed.

6. Furnish and install all waterproof underlayment that will be covered by roofing, flashing, or siding.

7. Furnish metal flashing, which form part of the roof system, to masonry contractor and coordinate installation.

8. This project will enforce the use of 100% fall protection for all exposures 6 feet or greater for all workers.

9. Remove any fall protection *anchors* installed by the steel contractor for fall protection prior to roof installation.

10. If this contractor chooses to have a roof monitor, it does not relieve the contractor from following MIOSHA and BMC tie-off rules.

11. Coordinate all penetrations necessary with the mechanical and electrical contractors. Cut roofing where required by other trades. It is this contractor's responsibility to remobilize if necessary for additional penetrations created after the initial roof is completed.

12. Witness installation of exhaust fans and all other roof mounted equipment and provide instruction when necessary to ensure that the roofing system is not compromised. Provide written report immediately following installation stating the condition of the roof prior to and subsequent installation of the new equipment.

13. Provide and maintain all necessary barricades, safety and warning devices for this work. *Job Safety Hazard Precon meetings will be held at Barton Malow's designation.*

14. Provide protection of existing roof systems during installation of new roof until system is complete. *Provide protection that will not compromise the existing roof. Plan two (2) mobilizations.*

15. Do not throw materials off of the roof. All waste generated by the work in this category shall be removed off site.

16. Provide daily clean-up, according to Barton Malow standards, including daily removal of all materials and debris related to this category. If daily clean-up is not performed, the Construction Manager will provide his labor to complete the clean-up and the appropriate contractor will be back-charged.

17. Final cleaning of the finished roof system, prior to manufacturer's inspection, is this contractors responsibility.

EXCLUDED FROM THIS CONTRACTOR'S WORK is:

1. **N/A**

SPECIAL CONSIDERATIONS:

1. All work under this scope shall comply with proper trade jurisdictions, even if it is necessary to assemble composite crews or subcontract to appropriate trades.

2. The special provisions outlined in **Section 00210 Description of the Work** form a part of this bid category work description and apply to this bidder's scope of work.

3. This Bidder is required to submit alternate prices identified in the Bidding Documents which pertain to their work. These alternate prices must be separate from their base bid on the Bid Proposal Form as described in Section 00200 Instructions to Bidders.

4. Take special precautions when working near occupied spaces with regards to fumes, noise and pollution levels. Some work may be necessary to be performed after the school day is over at this contractor expense.

5. Any in-place temporary protection that requires any disassembly to perform work, etc. must be replaced by contractor installing new work. Temporary protection must be restored to condition intended.

6. Section **00410, Familial Disclosure Statement**, **must** be filled out and included with your Bid for your Bid to be accepted.

END OF SECTION 00220 - ROOFING 7.1

SECTION 00220
WORK SCOPE

BID CATEGORY – Glazing & Metal Wall Panels 8.1

The Work of this Bid Category includes but is not limited to providing all labor, equipment, materials, scaffolding, hoisting and incidentals to complete all in accordance with the Contract Documents and applicable codes. All Work is to be performed as shown on the plans and specified in the following technical Specification sections:

Section	Name
01731	Cutting and Patching
01732	Selective Demolition
07210	Building Insulation
07412	Metal Wall Panels
07920	Joint Sealants
08411	Aluminum-Framed Entrances & Storefronts
08520	Aluminum Windows
08710	Door Hardware
08800	Glazing

In addition to the above, this Bid Category requires adherence to but not limited to the Bidding Documents, the Bidding and Contract requirements and Division 1 General Requirements of the Project Manual and coordination with various other technical Specifications interfacing with this Work. The Bidder is advised to review the Work descriptions of the other Bid Categories as set forth in Section 00210 of the Project Manual so as to not misunderstand scope responsibilities.

THE SCOPE OF WORK IS TO INCLUDE, but is not limited to, the following items:

1. Reference work scope assignments designated to the Architectural Demolition Notes, which can be found behind Project Manual section 00210 – Description of the Work/Special Provisions. These work scope assignments are to be included in your base bid.

2. Establish hold dimensions for all openings and provide written documentation required for hold open dimensions to 4.1 – Masonry and to the Construction Manger to distribute as necessary at least 2 weeks prior to block installation. Any layout drawings not provided in this time frame may result in a back charge to the 8.1 – Glazing & Metal Wall Panels contractor.

3. Demolition of all exterior doors, to be replaced, are the responsibility of this contractor. Where replacing doors and/or existing frames, include the removal and disposal of the existing door and frame. Hardware shall be salvaged and turned over to the Owner. Install temporary closure if new door cannot be installed within the work day.

4. If this contractor removes a window, it is this contractor's responsibility to install and maintain temporary protection in this opening. *Assemblies shall be wood framed reinforced visqueen.*

5. Furnish and install aluminum framed entrances and storefronts, FRP doors, aluminum windows, screens, window hardware, and glazing and trim metal within or around these systems. This

should also include glazing in doors, borrowed lite windows, insulated panels and louvers and other glazed openings.

6. Furnish and install all hardware for the above specified assemblies, including door hardware. Perform all adjustments necessary for hardware to operate satisfactorily.

7. Specification section 08710-1.4-D shall be superseded by the following: Keyway for all cylinders shall be provided per the Owner's schedule. Keying shall be by contractor, per the direction of the Owner.

8. It is this contractor's responsibility to coordinate with 6.1 – Carpentry to obtain fire-lite glazing sizes in all interior doors, side lites, and transoms. Installation must be coordinated with 6.1 – Carpentry to meet project schedule.

9. Furnish and install all metal wall panels as noted in plans and specifications under 07412 and furnish and install all metal wall panels noted on details. This is the contractor's responsibility to verify substrate and any problems thereof prior to installation of metal panels and metal wall panels.

10. Joint sealants must be installed on the perimeter of this contractors installed assemblies. Architectural joint sealants and/or weather sealant must be installed by this contractor on the exterior and interior of each window and storefront system.

11. Furnish and install all joint sealants where the work of this contractor meets adjacent surfaces.

12. Work must be furnished and installed per the project schedule.

13. Dispose of all unusable material in dumpster daily. Dumpsters will be provided by BMC for unidentifiable debris only.

14. Provide daily clean-up, according to Barton Malow standards, including daily removal of all materials and debris related to this category. If daily clean-up is not performed, the Construction Manager will provide his labor to complete the clean-up and the appropriate contractor will be back-charged.

15. Final cleaning must be included in this base bid and performance of will be directed by BMC when appropriate and logical.

EXCLUDED FROM THIS CONTRACTOR'S WORK is:

1. **N/A**

SPECIAL CONSIDERATIONS:

1. All work under this scope shall comply with proper trade jurisdictions, even if it is necessary to assemble composite crews or subcontract to appropriate trades.

2. The special provisions outlined in **Section 00210 Description of the Work** form a part of this bid category work description and apply to this bidder's scope of work.

3. This Bidder is required to submit alternate prices identified in the Bidding Documents which pertain to their work. These alternate prices must be separate from their base bid on the Bid Proposal Form as described in Section 00200 Instructions to Bidders.

4. Take special precautions when working near occupied spaces with regards to fumes, noise and pollution levels. Some work may be necessary to be performed after the school day is over at this contractor expense.

5. Any in-place temporary protection that requires any disassembly to perform work, etc. must be replaced by contractor installing new work. Temporary protection must be restored to condition intended.

6. Section **00410, Familial Disclosure Statement, must** be filled out and included with your Bid for your Bid to be accepted.

END OF SECTION 00220 – GLAZING & METAL WALL PANELS 8.1

SECTION 00220
WORK SCOPE

BID CATEGORY – Painting 9.1

The Work of this Bid Category includes but is not limited to providing all labor, equipment, materials, scaffolding, hoisting and incidentals to complete all in accordance with the Contract Documents and applicable codes. All Work is to be performed as shown on the plans and specified in the following technical Specification sections:

Section	Name
01731	Cutting and Patching
01732	Selective Demolition
07920	Joint Sealants
09911	Exterior Painting
09912	Interior Painting

In addition to the above, this Bid Category requires adherence to but not limited to the Bidding Documents, the Bidding and Contract requirements and Division 1 General Requirements of the Project Manual and coordination with various other technical Specifications interfacing with this Work. The Bidder is advised to review the Work descriptions of the other Bid Categories as set forth in Section 00210 of the Project Manual so as to not misunderstand scope responsibilities.

THE SCOPE OF WORK IS TO INCLUDE, but is not limited to, the following items:

1. Reference work scope assignments designated to the Architectural Demolition Notes, which can be found behind Project Manual section 00210 – Description of the Work/Special Provisions. These work scope assignments are to be included in your base bid.

2. Furnish and install all items listed or described in assigned Specification Sections and as indicated on the drawings and/or listed on the color plan layout.

3. Clean and prepare all walls, hollow metal doors and frames, and surfaces for finishing, including all required caulking, patching, sanding and minor repairs. Joint sealer is to be used at all interior finishes or all dissimilar metals and/or surfaces. If walls need more than minor prep notify job superintendent.

4. This contractor is responsible for removing or covering all cover plates, trim pieces and other pre-finished surfaces necessary for the performance of this work and replacing same at the conclusion of this Contractor's work. Cover and protect new work to avoid damage.

5. Provide finish painting for walls, ceilings, soffits and underside of deck where ceiling is exposed.

6. Provide finish painting of all hollow metal doors and frames as shown on drawings. Install joint sealant at perimeter of frames prior to painting.

7. Provide minor prep and paint existing wall surfaces where existing casework, shelving, toilet partitions and accessories are to be removed.

8. Provide finish painting of exposed pipes, conduit and ducts, hangers and exposed steel and ironwork as indicated on drawings. This includes hand railings and stringers.

9. If any adjacent surfaces are damaged it will be the sole responsibility of the contractor at fault to completely repair and replace all damaged construction to the satisfaction of the owner, construction manager and architect.

10. Provide daily clean-up, according to Barton Malow standards, including daily removal of all materials and debris related to this category. If daily clean-up is not performed, the Construction Manager will provide his labor to complete the clean-up and the appropriate contractor will be back-charged.

11. Final cleaning may not be excluded from this contract.

12. Provide an allowance of $3,000.00 in the base bid to cover the cost of touch-up painting needed following owner move in, or as directed by BMC. Any and all time tickets pertaining to this allowance are to be signed by Barton Malow and submitted on a daily basis. No time tickets will be accepted unendorsed. Allowance when billed shall be exclusive of mar-ups and fees. Include these costs in your base bid.

EXCLUDED FROM THIS CONTRACTOR'S WORK is:

1. **N/A**

SPECIAL CONSIDERATIONS:

1. All work under this scope shall comply with proper trade jurisdictions, even if it is necessary to assemble composite crews or subcontract to appropriate trades.

2. The special provisions outlined in **Section 00210 Description of the Work** form a part of this bid category work description and apply to this bidder's scope of work.

3. This Bidder is required to submit alternate prices identified in the Bidding Documents which pertain to their work. These alternate prices must be separate from their base bid on the Bid Proposal Form as described in Section 00200 Instructions to Bidders.

4. Take special precautions when working near occupied spaces with regards to fumes, noise and pollution levels. Some work may be necessary to be performed after the school day is over at this contractor expense.

5. Any in-place temporary protection that requires any disassembly to perform work, etc. must be replaced by contractor installing new work. Temporary protection must be restored to condition intended.

6. Section **00410, Familial Disclosure Statement, must** be filled out and included with your Bid for your Bid to be accepted.

END OF SECTION 00220 - PAINTING 9.1

SECTION 00220
WORK SCOPE

BID CATEGORY –Ceramic Tile 9.2

The Work of this Bid Category includes but is not limited to providing all labor, equipment, materials, scaffolding, hoisting and incidentals to complete all in accordance with the Contract Documents and applicable codes. All Work is to be performed as shown on the plans and specified in the following technical Specification sections:

Section	Name
01731	Cutting and Patching
01732	Selective Demolition
07920	Joint Sealants
09310	Ceramic Tile

In addition to the above, this Bid Category requires adherence to but not limited to the Bidding Documents, the Bidding and Contract requirements and Division 1 General Requirements of the Project Manual and coordination with various other technical Specifications interfacing with this Work. The Bidder is advised to review the Work descriptions of the other Bid Categories as set forth in Section 00210 of the Project Manual so as to not misunderstand scope responsibilities.

THE SCOPE OF WORK IS TO INCLUDE, but is not limited to, the following items:

1. Reference work scope assignments designated to the Architectural Demolition Notes, which can be found behind Project Manual section 00210 – Description of the Work/Special Provisions. These work scope assignments are to be included in your base bid.

2. Perform all layout as required to complete the work of this contract.

3. Control dust created by the execution of this contract.

4. Base bid shall include all necessary floor/wall prep including, but not limited to scarification, wall leveling, and insuring a substrate that is plumb and level. Coordinate all required depressions in new concrete with flat work contractor.

5. Furnish and install all ceramic tile flooring, ceramic tile base, beveled thresholds and all other accessory items required for a complete flooring installation.

6. Furnish and install all sealant joints where the work in this category abuts adjacent surfaces.

7. It is this contractor's responsibility to cover his work with temporary protection. This protection must be masonite, a minimum of 3/16" thickness.

8. Protect adjacent surfaces and finishes during installation of new work by this contractor.

9. If any adjacent surfaces are damaged it will be the sole responsibility of the contractor at fault to completely repair and replace all damaged construction to the satisfaction of the owner, construction manager and architect.

10. Cover, seal and protect new work in place to avoid damage until building is turned over to owner.

11. Provide daily clean-up, according to Barton Malow standards, including daily removal of all materials and debris related to this category. If daily clean-up is not performed, the Construction Manager will provide his labor to complete the clean-up and the appropriate contractor will be back-charged.

12. Final cleaning of this contractor's installed material must be included in base bid.

13. Include an allowance of $2,000 to be used at Barton Malow's discretion. Any and all time tickets pertaining to this allowance are to be signed by Barton Malow and submitted on a daily basis. No time tickets will be accepted unendorsed. Allowance when billed shall be exclusive of mar-ups and fees. Include these costs in your base bid.

EXCLUDED FROM THIS CONTRACTOR'S WORK is:

1. **N/A**

SPECIAL CONSIDERATIONS:

1. All work under this scope shall comply with proper trade jurisdictions, even if it is necessary to assemble composite crews or subcontract to appropriate trades.

2. The special provisions outlined in **Section 00210 Description of the Work** form a part of this bid category work description and apply to this bidder's scope of work.

3. This Bidder is required to submit alternate prices identified in the Bidding Documents which pertain to their work. These alternate prices must be separate from their base bid on the Bid Proposal Form as described in Section 00200 Instructions to Bidders.

4. Take special precautions when working near occupied spaces with regards to fumes, noise and pollution levels. Some work may be necessary to be performed after the school day is over at this contractor expense.

5. Any in-place temporary protection that requires any disassembly to perform work, etc. must be replaced by contractor installing new work. Temporary protection must be restored to condition intended.

6. Section **00410, Familial Disclosure Statement, must** be filled out and included with your Bid for your Bid to be accepted.

END OF SECTION 00220 – CERAMIC TILE 9.2

SECTION 00220
WORK SCOPE

BID CATEGORY – Carpet, Resilient Tile and Base 9.3

The Work of this Bid Category includes but is not limited to providing all labor, equipment, materials, scaffolding, hoisting and incidentals to complete all in accordance with the Contract Documents and applicable codes. All Work is to be performed as shown on the plans and specified in the following technical Specification sections:

Section	Name
01731	Cutting and Patching
01732	Selective Demolition
09651	Resilient Floor Tile
09653	Resilient Wall Base and Accessories
09681	Carpet Tile

In addition to the above, this Bid Category requires adherence to but not limited to the Bidding Documents, the Bidding and Contract requirements and Division 1 General Requirements of the Project Manual and coordination with various other technical Specifications interfacing with this Work. The Bidder is advised to review the Work descriptions of the other Bid Categories as set forth in Section 00210 of the Project Manual so as to not misunderstand scope responsibilities.

THE SCOPE OF WORK IS TO INCLUDE, but is not limited to, the following items:

1. Reference work scope assignments designated to the Architectural Demolition Notes, which can be found behind Project Manual section 00210 – Description of the Work/Special Provisions. These work scope assignments are to be included in your base bid.

2. Perform all layouts as required to complete the work of this contract.

3. Provide on-site supervision by this trade for all subcontractors of this trade.

4. Control dust created by the execution of this contract.

5. Base bid shall include all necessary floor prep (per manufacturer's thickness recommendation). Coordinate all required depressions in new concrete with flat work contractor. Include preparations for patching and repairing of flooring to match existing.

6. Furnish and install all resilient tile flooring, rubber base, and all other accessory items required for a complete flooring installation. Refer to any specific patterns indicated on drawings.

7. Furnish and install all sills, metal thresholds, doorsills and required transitions at all dissimilar floor materials.

8. Furnish and install rubber base at casework.

9. Furnish all carpet and VCT out of one dye lot to provide color unity.

10. Contractor is responsible to incur all costs for moisture testing and sealer, as required by flooring manufacturer's recommendation prior to installation of any flooring. Provide Barton Malow with written documentation one week prior to floor installation.

11. Protect adjacent surfaces while installing the new work of this contract.

12. If any adjacent surfaces are damaged it will be the sole responsibility of the contractor at fault to completely repair and replace all damaged construction to the satisfaction of the owner, construction manager and architect.

13. Provide and maintain a minimum of 3 ft. of adhesive floor protection as pathways on newly installed flooring surfaces provided by this contractor.

14. Clean existing walls of adhesive prior to installing new base material.

15. Provide daily clean-up, according to Barton Malow standards, including daily removal of all materials and debris related to this category. If daily clean-up is not performed, the Construction Manager will provide his labor to complete the clean-up and the appropriate contractor will be back-charged.

16. Final cleaning of this contractor's installed material must be included in base bid.

17. Include a $4,000 allowance to be used as directed by BMC. Any and all time tickets pertaining to this allowance are to be signed by Barton Malow and submitted on a daily basis. No time tickets will be accepted unendorsed. Allowance when billed shall be exclusive of mar-ups and fees. Include these costs in your base bid.

EXCLUDED FROM THIS CONTRACTOR'S WORK is:

1. **N/A**

SPECIAL CONSIDERATIONS:

1. All work under this scope shall comply with proper trade jurisdictions, even if it is necessary to assemble composite crews or subcontract to appropriate trades.

2. The special provisions outlined in **Section 00210 Description of the Work** form a part of this bid category work description and apply to this bidder's scope of work.

3. This Bidder is required to submit alternate prices identified in the Bidding Documents which pertain to their work. These alternate prices must be separate from their base bid on the Bid Proposal Form as described in Section 00200 Instructions to Bidders.

4. Take special precautions when working near occupied spaces with regards to fumes, noise and pollution levels. Some work may be necessary to be performed after the school day is over at this contractor expense.

5. Any in-place temporary protection that requires any disassembly to perform work, etc. must be replaced by contractor installing new work. Temporary protection must be restored to condition intended.

6. Section **00410, Familial Disclosure Statement**, **must** be filled out and included with your Bid for your Bid to be accepted.

END OF SECTION 00220 – CARPET, RESILIENT TILE AND BASE 9.3

SECTION 00220
WORK SCOPE

BID CATEGORY – Telescoping Stands 12.1

The Work of this Bid Category includes but is not limited to providing all labor, equipment, materials, scaffolding, hoisting and incidentals to complete all in accordance with the Contract Documents and applicable codes. All Work is to be performed as shown on the plans and specified in the following technical Specification sections:

Section	Name
12660	Telescoping Stands

In addition to the above, this Bid Category requires adherence to but not limited to the Bidding Documents, the Bidding and Contract requirements and Division 1 General Requirements of the Project Manual and coordination with various other technical Specifications interfacing with this Work. The Bidder is advised to review the Work descriptions of the other Bid Categories as set forth in Section 00210 of the Project Manual so as to not misunderstand scope responsibilities.

THE SCOPE OF WORK IS TO INCLUDE, but is not limited to, the following items:

1. Furnish and install all telescoping stands including all associated accessories for complete installation.
2. This contractor is responsible for field measurements and layout of their work.
3. This contractor is responsible to visit the site to determine the extent of the work required to provide a complete installation of the equipment. Include all necessary work in base bid.
4. Provide and install all support framing required to install telescoping stands. Only steel shown in plans will be provided and installed by 05000, steel contractor.
5. Caulk all products installed by this contractor where required for work of this work category.
6. Protection of adjacent work already in place is the responsibility of this contractor.
7. Provide daily clean-up, according to Barton Malow standards, including daily removal of all materials and debris related to this category. If daily clean-up is not performed, the Construction Manager will provide his labor to complete the clean-up and the appropriate contractor will be back-charged.
8. Final cleaning must be included within this bid. Performance of cleaning will be directed by BMC when appropriate and logical.

EXCLUDED FROM THIS CONTRACTOR'S WORK is:

1. **N/A**

SPECIAL CONSIDERATIONS:

1. All work under this scope shall comply with proper trade jurisdictions, even if it is necessary to assemble composite crews or subcontract to appropriate trades.

2. The special provisions outlined in **Section 00210 Description of the Work** form a part of this bid category work description and apply to this bidder's scope of work.

3. This Bidder is required to submit alternate prices identified in the Bidding Documents which pertain to their work. These alternate prices must be separate from their base bid on the Bid Proposal Form as described in Section 00200 Instructions to Bidders.

4. Take special precautions when working near occupied spaces with regards to fumes, noise and pollution levels. Some work may be necessary to be performed after the school day is over at this contractor expense.

5. Any in-place temporary protection that requires any disassembly to perform work, etc. must be replaced by contractor installing new work. Temporary protection must be restored to condition intended.

6. Section **00410, Familial Disclosure Statement**, **must** be filled out and included with your Bid for your Bid to be accepted.

END OF SECTION 00220 – TELESCOPING STANDS 12.1

SECTION 00220
WORK SCOPE

BID CATEGORY – Gym Equipment 12.2

The Work of this Bid Category includes but is not limited to providing all labor, equipment, materials, scaffolding, hoisting and incidentals to complete all in accordance with the Contract Documents and applicable codes. All Work is to be performed as shown on the plans and specified in the following technical Specification sections:

Section	Name
11490	Gymnasium Equipment

In addition to the above, this Bid Category requires adherence to but not limited to the Bidding Documents, the Bidding and Contract requirements and Division 1 General Requirements of the Project Manual and coordination with various other technical Specifications interfacing with this Work. The Bidder is advised to review the Work descriptions of the other Bid Categories as set forth in Section 00210 of the Project Manual so as to not misunderstand scope responsibilities.

THE SCOPE OF WORK IS TO INCLUDE, but is not limited to, the following items:

1. Furnish and install all gym equipment noted on plans and in specifications. Provide and install all blocking and support framing, anchoring necessary.

2. This contractor is responsible for field measurements and layout of their work.

3. This contractor is responsible to visit the site to determine the extent of the work required to provide a complete installation of the equipment. Include all necessary work in base bid.

4. Provide and install all support framing required *for* gym equipment. Only steel shown in plans will be provided and installed by 5.1 - Steel contractor.

5. *Patch existing surfaces where equipment is being removed and new equipment is being installed by this contractor.*

6. Protection of adjacent work already in place is the responsibility of this contractor.

7. Final cleaning must be included within this bid. Performance of cleaning will be directed by BMC when appropriate and logical.

EXCLUDED FROM THIS CONTRACTOR'S WORK is:

1. **N/A**

SPECIAL CONSIDERATIONS:

1. All work under this scope shall comply with proper trade jurisdictions, even if it is necessary to assemble composite crews or subcontract to appropriate trades.

2. The special provisions outlined in **Section 00210 Description of the Work** form a part of this bid category work description and apply to this bidder's scope of work.

3. This Bidder is required to submit alternate prices identified in the Bidding Documents which pertain to their work. These alternate prices must be separate from their base bid on the Bid Proposal Form as described in Section 00200 Instructions to Bidders.

4. Take special precautions when working near occupied spaces with regards to fumes, noise and pollution levels. Some work may be necessary to be performed after the school day is over at this contractor expense.

5. Any in-place temporary protection that requires any disassembly to perform work, etc. must be replaced by contractor installing new work. Temporary protection must be restored to condition intended.

6. Section **00410, Familial Disclosure Statement, must** be filled out and included with your Bid for your Bid to be accepted.

END OF SECTION 00220 – GYM EQUIPMENT 12.2

SECTION 00220
WORK SCOPE

BID CATEGORY - Mechanical 15.1

The Work of this Bid Category includes but is not limited to providing all labor, equipment, materials, scaffolding, hoisting and incidentals to complete all **mechanical, plumbing, fire protection, and other specified items** in accordance with the Contract Documents and applicable codes. All Work is to be performed as shown on the plans and specified in the following technical Specification sections:

Section	Name
01230	Alternates
01731	Cutting and Patching
01732	Selective Demolition
07210	Building Insulation
07841	Through-Penetration Firestop Systems
07920	Joint Sealants
08311	Access Doors and Frames
10801	Toilet and Bath Accessories
11400	Food Service Equipment
13915	Fire-Suppression Piping
All 15000	Mechanical (Except 15950)

In addition to the above, this Bid Category requires adherence to but not limited to the Bidding Documents, the Bidding and Contract requirements and Division 1 General Requirements of the Project Manual and coordination with various other technical Specifications interfacing with this Work. The Bidder is advised to review the Work descriptions of the other Bid Categories as set forth in Section 00210 of the Project Manual so as to not misunderstand scope responsibilities.

THE SCOPE OF WORK IS TO INCLUDE, but is not limited to, the following items:

1. Reference work scope assignments designated to the Architectural Demolition Notes, which can be found behind Project Manual section 00210 – Description of the Work/Special Provisions. These work scope assignments are to be included in your base bid.

2. Provide all layout and engineering associated with this work necessary to perform a complete job using established building lines, control points and elevations.

3. This contractor WILL provide continuous on-site supervision and a general foreman for all subcontractors on site.

4. Include mechanical, plumbing, fire protection and HVAC demolition as shown on plans. Salvaged items, cutting and capping lines is this contractor's responsibility. Capping lines in building units that will be connected to future lines, in adjacent units at different times, is the responsibility of this contractor.

5. Furnish all labor, tools, equipment, material and services necessary to install all mechanical systems complete.

6. Furnish and install all food service equipment indicated on drawings and specified in the specifications.
7. This contractor shall field verify all dimensions and furnish dimensional layout drawings and coordinated required roof openings and structural supports for the hood and any other rooftop equipment, *per the sequencing of the bid schedule.*

8. *This contractor is to include fire suppression testing when new water main is installed supplying new and/or existing fire suppression system.*

9. Furnish and install all required ductwork and fittings with the hood and exhaust.

10. Provide final adjustments and cleaning of equipment and provide Owner training with demonstrations to operate equipment.

11. It is this contractor's responsibility to hire a qualified roofing contractor to seal any new and/or abandoned roof penetrations that this contractor makes to the roof system. See roofing specifications for acceptable/qualified roofing manufacturers and installers.

12. Troy School District will furnish and install soap dispensers, paper towel holders and toilet paper holders and sanitary napkin disposal. Furnish other toilet and bath accessories as specified.

13. Furnish and install all louvers and vents complete, including blank-off panels and bird screens if shown on drawings. Layout openings for masonry and/or glazing contractor to cut openings, at least 2 weeks prior to block installation. Any layout not provided in this time frame may result in a back charge to the 15.1 – Mechanical contractor.
14. 15.1 - Mechanical will provide layout drawings for through wall penetrations of mechanical systems to 4.1 - Masonry at least two weeks prior to block installation in that unit. It is this contractor's responsibility to review CMU openings and provide documentation of a sign off sheet by both parties. Once this sheet is sent to BMC, 15.1 – Mechanical will assume all responsibility for openings.

15. *This contractor is responsible for removal and disposal of ALL ceiling tiles. The intent is to remove/dispose of existing ACT in rooms where ductwork is being replaced and new ceiling grid and ACT is being installed, per contract.*
16. Removal and replacement of existing diffusers and any other mechanical equipment necessary for the ceiling grid and tile replacement is the responsibility of this contractor.

17. The manufacturer for Variable Frequency Drives listed in Specification Section 15055 – Motors shall be ABB Drives, Inc. ONLY.

18. *Provide VFD's for 16.1 – Electrical contractor installation and terminations.*

19. Furnish and install sleeves required for this contractor's work to concrete or site contractor where applicable.

20. Furnish mechanical sleeves necessary for your work, to be installed by 3.1 – Concrete contractor.

21. Include all saw cutting, excavation, backfill and concrete infill as indicated on mechanical and plumbing and HVAC drawings to install new mechanical systems. Remove concrete and spoils from site.

22. Include labor to readjust any such penetrations just prior to any activity that will permanently lock such rough-ins in place, i.e., roof sump pans.

23. Provide all concrete equipment pads required for mechanical equipment but not shown on the drawings.

24. Furnish equipment roof curbs to roofing contractor. Layout in field of these roof curbs to be completed by this contractor. This contractor will coordinate with the roofing contractor before any penetrations are made in the roofing system.

25. Furnish all new mechanical equipment, systems, and components as indicated on the drawings as required for complete systems.

26. This contractor is responsible to make all connections to tie-in all sanitary piping, domestic water, and roof drains up to 5'-0" outside of the building footprint.

27. The contractor's field superintendent shall be present during testing and field reviews conducted by inspection agencies.

28. Coordinate delivery, receive, unload, store and protect all mechanical equipment. Maintain insurance for equipment in transit, while stored on or off site until equipment is installed.

29. Provide all duct and pipe insulation AND labeling as shown and specified.

30. Furnish and layout piping boots in field for installation by roofing contractor.

31. Install duct smoke detectors provided by the electrical contractor.

32. Furnish and install fire dampers where ductwork penetrates rated wall assemblies. Ensure engineers drawings comply with life safety codes for rated walls.

33. *It is this contractor's responsibility to install control valves, dampers, motors, wells, and accessories. Instrument wells and dampers to be furnished by 15.2 – Temperature and Lighting Controls contractor.*

34. This contractor shall factory install all DDC controls *per mechanical schedules and specifications.*

35. Provide all trouble shooting and diagnosis of malfunctioning mechanical systems.

36. Test all systems to assure complete installation and notify BMC when systems are ready for balancing contractor to perform adjusting and balancing.

37. Correct findings from balancing reports immediately following receipt of reports. The balancing contractor will verify compliance with report findings in a final review. Repeat visits, by the balancing contractor resulting from incomplete corrections shall be at the expense of the Mechanical contractor.

38. *Install temporary building enclosure assemblies where openings exist for existing and new mechanical installations. Assemblies shall be wood frames reinforced visqueen.*

39. It is this contractor's responsibility to modify and/or relocate sprinkler head drops in new ceilings as required. Reference sheet FS1.1.

40. All ductwork shall be kept clean and protected throughout construction. *Install necessary coverage at existing branches and/or install temporary fillers to be changed out* prior to testing, adjusting and balancing. Provide final cleaning, dusting and washing as needed of all materials, equipment, fixtures and systems installed and/or supplied under this work category. Coordinate the time of implementation with the Construction Manager.

41. Install weather and joint sealants for newly installed equipment. At floors, use backer rod to cover shims and seal.

42. Caulk all products installed by this contractor where required for work of this category.

43. Furnish and install all fire stopping necessary to seal penetrations related to mechanical system installations. Use UL approved products. Maintain indicated fire rating of walls, partitions, ceilings and floors at penetrations.

44. Provide all necessary barricades, safety and warning devices for this work.

45. Furnish access panels and layout locations to 6.1 - Carpentry and/or 4.1 -Masonry contractor. These panels may not be shown on drawings but are necessary for the end user to maintain and access this system.

46. Obtain and pay for all local, state and municipal permit and/or fees required for the execution of the work. On Plumbing Permit Application check Box 24, Certification Fee and include $10.00. **On Mechanical Permit Application check Box 36, Certificate Fee, and include $10.00. These certificates will be turned over to the construction manager with close out documents.**

47. Contractor of this work category shall locate and layout all elevations and locations of pipe or ductwork penetrations required by this category for shown locations. Penetrations required, but not shown, by this work category shall be approved by the Architect prior to installation. A qualified masonry contractor must perform penetrations through masonry that will be exposed to view. Costs for all penetrations required to complete the work of this category will be the responsibility of the Mechanical Contractor.

48. Cutting and welding operations shall cease 2 hours prior to the close of construction each day to minimize the risk of undetected smoldering fire. Contractors performing such operations shall have within their immediate work area, ABC-type fire extinguishers.

49. A walk through must be taken with the Construction Manager, Owner's Representative, Building Head Custodian prior to ceiling tile installation to locate all above ceiling valves. All valves must have location labeled below ceiling level. Documentation of this walk through must be given to Construction Manager in writing the day after the walk through takes place.

50. Complete as-built drawings on reproducibles as specified. Refer to Section 01330-5.03-E for costs associated with this item.

EXCLUDED FROM THIS CONTRACTOR'S WORK is:

1. N/A

SPECIAL CONSIDERATIONS:

1. All work under this scope shall comply with proper trade jurisdictions, even if it is necessary to assemble composite crews or subcontract to appropriate trades.

2. The special provisions outlined in **Section 00210 Description of the Work** form a part of this bid category work description and apply to this bidder's scope of work.

3. This Bidder is required to submit alternate prices identified in the Bidding Documents which pertain to their work. These alternate prices must be separate from their base bid on the Bid Proposal Form as described in Section 00200 Instructions to Bidders.

4. Take special precautions when working near occupied spaces with regards to fumes, noise and pollution levels. Some work may be necessary to be performed after the school day is over at this contractor expense.

5. Any in-place temporary protection that requires any disassembly to perform work, etc. must be replaced by contractor installing new work. Temporary protection must be restored to condition intended.

6. Section **00410, Familial Disclosure Statement, must** be filled out and included with your Bid for your Bid to be accepted.

END OF SECTION 00220 - MECHANICAL 15.1

SECTION 00220
WORK SCOPE

BID CATEGORY – Temperature and Lighting Controls 15.2

The Work of this Bid Category includes but is not limited to providing all labor, equipment, materials, scaffolding, hoisting and incidentals to complete all **temperature and lighting controls and sequence of operations as indicated in specifications, plans and by coordination with Owner** in accordance with the Contract Documents and applicable codes. All Work is to be performed as shown on the plans and specified in the following technical Specification sections:

Section	Name
01731	*Cutting and Patching*
01732	Selective Demolition
07841	Through-Penetration Firestop Systems
13845	Lighting Controls
15900	HVAC Instrumentation and Controls
15940	Sequence of Operations
All 15000	For Reference

In addition to the above, this Bid Category requires adherence to but not limited to the Bidding Documents, the Bidding and Contract requirements and Division 1 General Requirements of the Project Manual and coordination with various other technical Specifications interfacing with this Work. The Bidder is advised to review the Work descriptions of the other Bid Categories as set forth in Section 00210 of the Project Manual so as to not misunderstand scope responsibilities.

THE SCOPE OF WORK IS TO INCLUDE, but is not limited to, the following items:

1. Reference work scope assignments designated to the Architectural Demolition Notes, which can be found behind Project Manual section 00210 – Description of the Work/Special Provisions. These work scope assignments are to be included in your base bid.

2. Perform all layout as required to complete the work of this contract.

3. It shall be the responsibility of this contractor to thoroughly review the mechanical and electrical drawings divisions 15 and 16 specifications in their entirety, to coordinate components to be furnished and or installed to result in fully functioning systems.

4. Furnish hydronic instrument wells *and dampers*. These items will be installed by 15.1 - Mechanical contractor.

5. Control valves are to be furnished by this contractor for installation by 15.1 – Mechanical contractor.

6. Provide lighting control panels (LCP) as specified in section 13845, to be installed by 16.1 – Electrical contractor.

7. Provide back boxes for low voltage switches, to be installed by 16.1 – Electrical contractor.

8. Provide and install low voltage lighting control devices directly connected to LCP as specified under section 13845, and shown on electrical drawings.

9. Provide all labor, tools, equipment, material and services necessary to install complete controls as indicated. Including but not limited to penetrations in floors and walls required for the installation of this work.

10. Provide input to trouble shoot and diagnose malfunctioning mechanical systems and sequence of operation of mechanical systems.

11. All work to be completed in accordance with the project schedule and so not to disturb any finished and rated material or surface.

12. Removal and replacement of ceiling tiles and grid necessary for the installation of this contractors scope are the responsibility of this contractor. *All new penetrations MUST be UL rated.*

13. Provide and install all low voltage wiring devices and LCP's with regard to specification section 13845.

14. Cover and protect work as required or conditions warrant.

15. Obtain and pay for all local, state and municipal permit and/or fees required for the execution of the work.

16. Provide Owner with operational instruction as necessary to enable them to operate and maintain new systems controls. Provide signed documentation of instruction session, including date and attendees to BMC within 24hrs of each session. This is a required component for closeout.

17. Complete as-built drawings on reproducibles as specified. Refer to section 01330-5.03-E for costs associated with this item.

18. Broom clean areas at the end of each day's work.

19. Dispose of all unusable material in dumpster daily. Dumpsters will be provided y Barton Malow Company for unidentifiable debris only. It is the responsibility of each contractor to dispose of their own spoils off site.

20. Final cleaning of installed end user devices must be performed.

EXCLUDED FROM THIS CONTRACTOR'S WORK is:

N/A

SPECIAL CONSIDERATIONS:

1. All work under this scope shall comply with proper trade jurisdictions, even if it is necessary to assemble composite crews or subcontract to appropriate trades.

2. The special provisions outlined in **Section 00210 Description of the Work** form a part of this bid category work description and apply to this bidder's scope of work.

3. This Bidder is required to submit alternate prices identified in the Bidding Documents which pertain to their work. These alternate prices must be separate from their base bid on the Bid Proposal Form as described in Section 00200 Instructions to Bidders.

4. Take special precautions when working near occupied spaces with regards to fumes, noise and pollution levels. Some work may be necessary to be performed after the school day is over at this contractor expense.

5. Any in-place temporary protection that requires any disassembly to perform work, etc. must be replaced by contractor installing new work. Temporary protection must be restored to condition intended.

6. Section **00410, Familial Disclosure Statement, must** be filled out and included with your Bid for your Bid to be accepted.

END OF SECTION 00220 – TEMPERATURE AND LIGHTING CONTROLS 15.2

SECTION 00220
WORK SCOPE

BID CATEGORY – Mechanical Testing and Balancing 15.3

The Work of this Bid Category includes but is not limited to providing all labor, equipment, materials, scaffolding, hoisting and incidentals to complete all **mechanical, plumbing, fire protection, selective demolition and other specified items** in accordance with the Contract Documents and applicable codes. All Work is to be performed as shown on the plans and specified in the following technical Specification sections:

Section	Name
15950	Testing, Adjusting and Balancing
All 15000	Mechanical for reference

In addition to the above, this Bid Category requires adherence to but not limited to the Bidding Documents, the Bidding and Contract requirements and Division 1 General Requirements of the Project Manual and coordination with various other technical Specifications interfacing with this Work. The Bidder is advised to review the Work descriptions of the other Bid Categories as set forth in Section 00210 of the Project Manual so as to not misunderstand scope responsibilities.

THE SCOPE OF WORK IS TO INCLUDE, but is not limited to, the following items:

1. *Reference work scope assignments designated to the Architectural Demolition Notes, which can be found behind Project Manual section 00210 – Description of the Work/Special Provisions. These work scope assignments are to be included in your base bid.*
2. Coordination with other trades, including mandatory job meetings.
3. Coordinate onsite activities with Barton Malow Company superintendent and mechanical contractor.
4. Perform all activities defined in examination section of 15950 and furnish written report of findings.
5. Review all mechanical and electrical specification sections for balancing requirements and include all costs associated to comply with same.
6. Provide all labor, tools, equipment, material and services necessary to complete all adjusting and balancing specified. Provide (4) copies of Final Certified Balance Reports to BMC.
7. Removal and replacement of ceiling tiles and grids necessary for the installation of this contractors' scope are the responsibility of this contractor.
8. Include a follow up site inspection to verify that any non-compliance items identified in the Final Report have been corrected. Furnish amendment to Final Report documenting findings.
9. All work to be completed in accordance with project schedule.

10. Provide all necessary barricades, safety and warning devices for this work.

11. This contractor shall attend a walk through with the Construction Manager, Owner's Representative, and Building Head Custodian prior to ceiling tile installation to locate all above ceiling valves.

EXCLUDED FROM THIS CONTRACTOR'S WORK is:

1. **N/A**

SPECIAL CONSIDERATIONS:

1. All work under this scope shall comply with proper trade jurisdictions, even if it is necessary to assemble composite crews or subcontract to appropriate trades.

2. The special provisions outlined in **Section 00210 Description of the Work** form a part of this bid category work description and apply to this bidder's scope of work.

3. This Bidder is required to submit alternate prices identified in the Bidding Documents which pertain to their work. These alternate prices must be separate from their base bid on the Bid Proposal Form as described in Section 00200 Instructions to Bidders.

4. Take special precautions when working near occupied spaces with regards to fumes, noise and pollution levels. Some work may be necessary to be performed after the school day is over at this contractor expense.

5. Any in-place temporary protection that requires any disassembly to perform work, etc. must be replaced by contractor installing new work. Temporary protection must be restored to condition intended.

6. Section **00410, Familial Disclosure Statement, must** be filled out and included with your Bid for your Bid to be accepted.

END OF SECTION 00220 – MECHANICAL TESTING AND BALANCING 15.3

SECTION 00220
WORK SCOPE

BID CATEGORY – Electrical 16.1

The Work of this Bid Category includes but is not limited to providing all labor, equipment, materials, scaffolding, hoisting and incidentals to complete all **fire alarm, lighting protection, selective demolition and electrical systems and items specified** in accordance with the Contract Documents and applicable codes. All Work is to be performed as shown on the plans and specified in the following technical Specification sections:

Section	Name
01230	Alternate
01731	Cutting and Patching
01732	Selective Demolition
07841	Through-penetration Firestop Systems
07920	Joint Sealants
08311	Access Doors and Frames
13845	Lighting Controls
13851	Fire Alarm
15900	HVAC Instrumentation and controls
All 16000	Electrical

In addition to the above, this Bid Category requires adherence to but not limited to the Bidding Documents, the Bidding and Contract requirements and Division 1 General Requirements of the Project Manual and coordination with various other technical Specifications interfacing with this Work. The Bidder is advised to review the Work descriptions of the other Bid Categories as set forth in Section 00210 of the Project Manual so as to not misunderstand scope responsibilities.

THE SCOPE OF WORK IS TO INCLUDE, but is not limited to, the following items:

1. Reference work scope assignments designated to the Architectural Demolition Notes, which can be found behind Project Manual section 00210 – Description of the Work/Special Provisions. These work scope assignments are to be included in your base bid.

2. Perform all layouts as required to complete the work of this contract.

3. This contractor will disconnect and remove all existing electrical items and reinstall where necessary, as shown and required. Disconnect power to mechanical equipment to be removed by others. This contractor will connect all new electrical systems to existing systems and provide all new work on existing systems, as required. This contractor is responsible for protection of all existing electrical equipment and systems to remain.

4. Provide power to all mechanical equipment consistent with mechanical schedules and specifications from nearest panel unless noted otherwise.

5. Furnish electrical sleeves and provide layout, as necessary for your work, to be installed by the 3.1 – Concrete contractor.

6. Employ services of a registered surveyor to perform layout of all electrical work.
7. It is this contractor's responsibility to provide any and all electrical testing and inspections as listed in the electrical specifications.
8. Employ services of a reputable company to locate existing underground technology and power *to eliminate damage to existing services for installation of new work.*
9. Complete demolition, cutting, capping, temporary service connections and/or return to service as indicated on the electrical demolition plans and notes. Turn over salvaged items as directed. Maintain and/or provide safe electrical systems while in a temporary status.
10. Sawcut, remove and dispose of concrete, asphalt and/or greenbelt required to install the work of this category. Patch and *restore* as necessary in these areas.
11. Furnish and install all labor and material to install all electrical site elements complete. Concrete pole bases are this contractor's responsibility. This contractor is responsible for the re-seeding of disturbed green belt areas due to this contractor's work.
12. Furnish all access panels required to service the electrical systems but which are not shown on the drawings to the carpentry contractor.
13. Protect all thru-wall, floor and ceiling penetrations against damage. Include cost to re-adjust such rough-ins just prior to secured in-place. Coordinate this adjustment with the appropriate contractor.
14. Blank all abandoned boxes.
15. The masonry, electrical and carpentry contractor will share the responsibility for a square / plumb installation of all electrical and technology boxes, any cost incurred to adjust boxes to ensure a quality finished product will be shared by these contractors.
16. Furnish all concrete equipment pads required for electrical equipment *needed but* not shown on the drawings.
17. Install back boxes for the low voltage switches, to be provided by 15.2 – Temperature and Lighting Controls.
18. *Install VFD's provided by 15.1 – Mechanical contractor.*
19. Supply power to all mechanical fire/smoke dampers, and any other dampers requiring power.
20. Coordinate delivery, receive, unload, store and protect all electrical equipment. Maintain insurance for equipment in transit, while stored on or off site until equipment in installed.
21. Coordinate electrical device locations with architectural elements, i.e. tack boards, casework and marker boards prior to installation of electrical boxes to avoid installation conflicts.
22. The contractor's field superintendent must be present during testing and field reviews conducted by inspection agencies.

23. All contactors must be labeled on the front of the box as to what they control. If located above ceilings the location must be noted below ceiling level.

24. A walk through with the Construction Manager, Owner Representative, and building head custodian must be done and documented prior to completion of the project to show the location of all above ceiling control devices.

25. All panel boxes must be labeled with permanent room numbers.

26. Provide and maintain all necessary barricades, safety and warning devices until work is safe and complete.

27. Provide and install all fire stopping and joint sealants necessary to seal penetrations related to electrical system installations. Use UL approved products. Maintain indicated fire rating of walls, partitions, ceilings and floors at penetrations.

28. Obtain and pay for all necessary state and local permits, fees and insurance to perform this work. **On Electrical Permit Application check box 30 Certificate Fee and include $10.00.** This certificate will be turned over to the construction manager with close out documents.

29. Submit fire alarm shop drawings to governing agencies for approval *3 weeks after award of 16.1 – Electrical contract. Since this contractor is specialized and working under performance specifications, added devices in new areas from State review will NOT be compensated for.*

30. The manufacturer for occupancy sensors listed in Specification Section 16145 – Lighting Control Devices shall be Leviton ONLY.

31. Provide and install all lighting and associated wiring indicated on the drawings and specified in Section 16145.

32. Complete as-built drawings on reproducibles as specified, Refer to Section 01330-5.03-E for costs associated with this item.

33. With regard to Specification Section 13845, install all light control contactors and LCP's provided by 15.2 (Lighting and Temperature Controls) contractor. All branch circuit relay switching and rough-ins for low voltage switches is the responsibility of this contractor.

34. Install only temperature sensors as specified in 15900. Include rough-in of temperature sensor device in this contractors work.

35. Provide and install all conduit rough-ins for wall mounted thermostats, sensors and lighting control switches as shown on mechanical and electrical drawings. Minimally, each rough-in should consist of a single gang switch box with ½" EMT turning out above finished ceiling on the same side of the wall as the equipment, which is served by the thermostat, sensor or switch. Coordinate this work with 15.3 – Temperature and Lighting Controls contractor as certain sensors or lighting control switches may require alternate rough-on requirements that are to be included in your base bid.

36. It is this contractor's responsibility to ensure that all occupancy sensors or power packs have auxiliary contacts needed for BMS systems, per details.

37. Dispose of all unusable material in dumpster daily. Dumpsters will be provided by BMC for unidentifiable debris only. It is the responsibility of each contractor to dispose of their own spoils off site.

38. Include an allowance of $200,000 to be used for low voltage remediation, to be used at Barton Malow's discretion. Any and all time tickets pertaining to this allowance are to be signed by Barton Malow and submitted on a daily basis. No time tickets will be accepted unendorsed. Allowance when billed shall be exclusive of mar-ups and fees. Include these costs in your base bid.

EXCLUDED FROM THIS CONTRACTOR'S WORK is:

1. **N/A**

SPECIAL CONSIDERATIONS:

1. All work under this scope shall comply with proper trade jurisdictions, even if it is necessary to assemble composite crews or subcontract to appropriate trades.

2. The special provisions outlined in **Section 00210 Description of the Work** form a part of this bid category work description and apply to this bidder's scope of work.

3. This Bidder is required to submit alternate prices identified in the Bidding Documents which pertain to their work. These alternate prices must be separate from their base bid on the Bid Proposal Form as described in Section 00200 Instructions to Bidders.

4. Take special precautions when working near occupied spaces with regards to fumes, noise and pollution levels. Some work may be necessary to be performed after the school day is over at this contractor expense.

5. Any in-place temporary protection that requires any disassembly to perform work, etc. must be replaced by contractor installing new work. Temporary protection must be restored to condition intended.

6. Section **00410, Familial Disclosure Statement, must** be filled out and included with your Bid for your Bid to be accepted.

END OF SECTION 00220 - ELECTRICAL 16.1

SECTION 00230
SCHEDULE AND PHASING

PART 1 - GENERAL

1.01 RELATED DOCUMENTS

A. Attention is directed to Bidding and Contract Requirements, and to Division 1, General Requirements, which are hereby made a part of this Section.

1.02 MILESTONE SCHEDULE

A. The following are the milestone schedule dates for the listed work and will become a part of the Contract Documents. Each contractor is responsible to review the supplementary General Conditions for additional requirements. The master construction schedule will be developed after award of the Agreement with Contractor input.

MILESTONE ACTIVITIES	SCHEDULED START	SCHEDULED COMPLETION
Receive Bids	December 19, 2006	-
Issuance of Contracts (tentatively)	January 16, 2007	-
Smith Computer Lab and Office Additions	April 6, **2007**	*Sept. 20, **2007***
Smith Renovations	*June 18, **2007***	*August 29, **2007***
Smith Existing office remodel	*June 18, **2007***	*August 6, **2007***
Smith Parking Lot Renovation	*June 18, **2007***	*July 26, **2007***
*Boulan Park & Larson Renovation Work – **Units #1, #2, #3, #4***	*June 23, **2008***	*August 22, **2008***
*Boulan Park & Larson Renovation Work – **Units #5, #6, #7, #8, #9***	*June 25, **2007***	*August 29, **2007***

Close coordination will be required between all construction trades in order that individual areas of renovation and new construction can be completed within the scheduled time. *Consult the proposed construction sequence and renovation sequence schedules as well as building layout plans directly following this section.*

B. It is expressly agreed that time is of the essence for the completion of Work under the Agreement and **Contractor** agrees to perform the Work within the allotted time and in the manner specified. **Contractor** shall be liable for any and all damages and expenses suffered by the Owner or Barton Malow Company arising or resulting from the failure of **Contractor** to perform the Work in accordance with the construction schedule.

1.03 CONSTRUCTION SCHEDULE DEVELOPMENT PROCESS

A. **Contractor** agrees to commence Work in the field within five (5) Days after being notified to do so by the Barton Malow Company. **Contractor** shall diligently perform and fully complete all Work to the satisfaction of Barton Malow Company and Owner.

Work shall begin at such points as Barton Malow Company may designate and shall be carried to completion with the utmost speed.

B. **Contractor** shall submit to Barton Malow Company **within fifteen (15) Days of award of the Agreement a Bar Chart/CPM construction schedule using all necessary scheduling information using Barton Malow Company specified coding** of all activities contained in the **Contractor's** scope of Work. This schedule shall include activity descriptions and durations in working days, for shop drawings, fabrication, delivery and installation of products, materials and equipment. This schedule shall identify

precedent relationships between **Contractor's** activities and those of other **contractors**, the dollar value, necessary manpower loadings, and precedent activities for other **contractors**. The activities on the schedule must be at a level of detail approved by Barton Malow Company and should agree with the terminology and building sequencing established by Barton Malow Company.

C. Barton Malow Company will compile all **Contractors'** schedules and develop a project master construction schedule. Once the individual **Contractors** schedules are agreed upon by Barton Malow Company, this project master construction schedule will become the project plan for construction.

D. Special requirements and/or sequencing issues should be brought to the attention of Barton Malow Company. It is intended the milestones remain in effect and all Bidders agree to accept the milestone dates. Barton Malow Company reserves the right to revise the project master construction schedule as deemed necessary.

E. Barton Malow Company shall periodically update the project master construction schedule and display it at the Project site. Contractor shall familiarize itself with the project master construction schedule and how it will affect or modify its operations, including coordination with the activities of other **contractors**. Reasonable changes in sequencing, durations and phasing are to be expected with each master schedule update. These changes will be made by **Contractor** at no additional cost.

F. If it is apparent **Contractor** is unable to perform its Work in the sequence indicated or the time allotted, **Contractor** must notify Barton Malow Company within five (5) Days after initial publication of the project master construction schedule. **Contractor**s schedule of activities may be re-sequenced, and the schedule may be adjusted, provided all Work is completed within the stated milestone dates and provided Barton Malow Company and affected **contractors** are notified of the change within five (5) calendar days of receipt of the schedule and the change does not otherwise negatively impact the other scheduled work; otherwise, the project master construction schedule shall be deemed accepted by all parties and becomes a contractual requirement for each **Contractor**.

G. If **Contractor** delays progress for any reason other than those delays specifically excused under the Contract Documents, Contractor will take all necessary steps to expedite its Work to maintain milestone target dates at no expense or additional cost to Owner or Barton Malow Company.

H. If **Contractor** is behind schedule and is so notified by Barton Malow Company, **Contractor** shall be required to accelerate the Work at its own expense. **Contractor** shall furnish to Barton Malow Company a short interval schedule of its Work showing location, number of men and crew required to get back on the agreed upon master construction schedule. If **Contractor** fails to maintain and meet the short interval schedule, **Barton Malow Company** reserves the right to take whatever steps it deems necessary in its sole discretion to recover the schedule at the **Contractor**'s expense. The **Contractor** shall employ such means as overtime work, multiple work shifts, and additional equipment, all without additional compensation, and shall continue to do so until the progress of the Work, in the opinion of Barton Malow Company, is in conformance with the master project construction schedule.

I. **Contractor** agrees that it shall have no claim against the Owner, Architect, or Barton Malow Company for an increase in the contract price nor for a payment or allowance of any kind for damage, loss, or expense arising or resulting from delays, regardless of whether the delay is the basis for an extension of time. This provision includes claims for damage, loss, or expense arising or resulting from interruptions to, or necessary suspension of, **Contractor**'s Work to enable other **contractors** to perform their work.

END OF SECTION 00230

SMITH MIDDLE SCHOOL

Act ID	Description	Orig Dur	Rem Dur	Early Start	Early Finish	Total Float
Smith Computer Lab / Offices Addition						
1100	Temp Fencing	5	5	06APR07	12APR07	34d
1000	Demo Connector Area	4	4	13APR07	18APR07	34d
1010	Temp Door and wall	1	1	19APR07	19APR07	34d
1030	Demo existing concrete and walkways	2	2	20APR07	23APR07	34d
1020	Layout and building pad installation to grade	3	3	24APR07	26APR07	156d
1040	Dig Footings	3	3	24APR07	26APR07	34d
1050	Form / Pour /Strip Footings	8	8	27APR07	08MAY07	34d
1110	Underground Electrical and Sanitary	6	6	09MAY07	16MAY07	34d
1060	Begin masonry 2 course layout / elec in-wall	6	6	17MAY07	24MAY07	34d
1070	Install sand cushion/install underground elec	2	2	25MAY07	28MAY07	34d
1080	Pour slab on grade	2	2	29MAY07	30MAY07	34d
1090	Cont. CMU walls/inwall roof conductor / conduits	20	20	31MAY07	27JUN07	34d
1130	Install joists and decking	5	5	28JUN07	05JUL07	34d

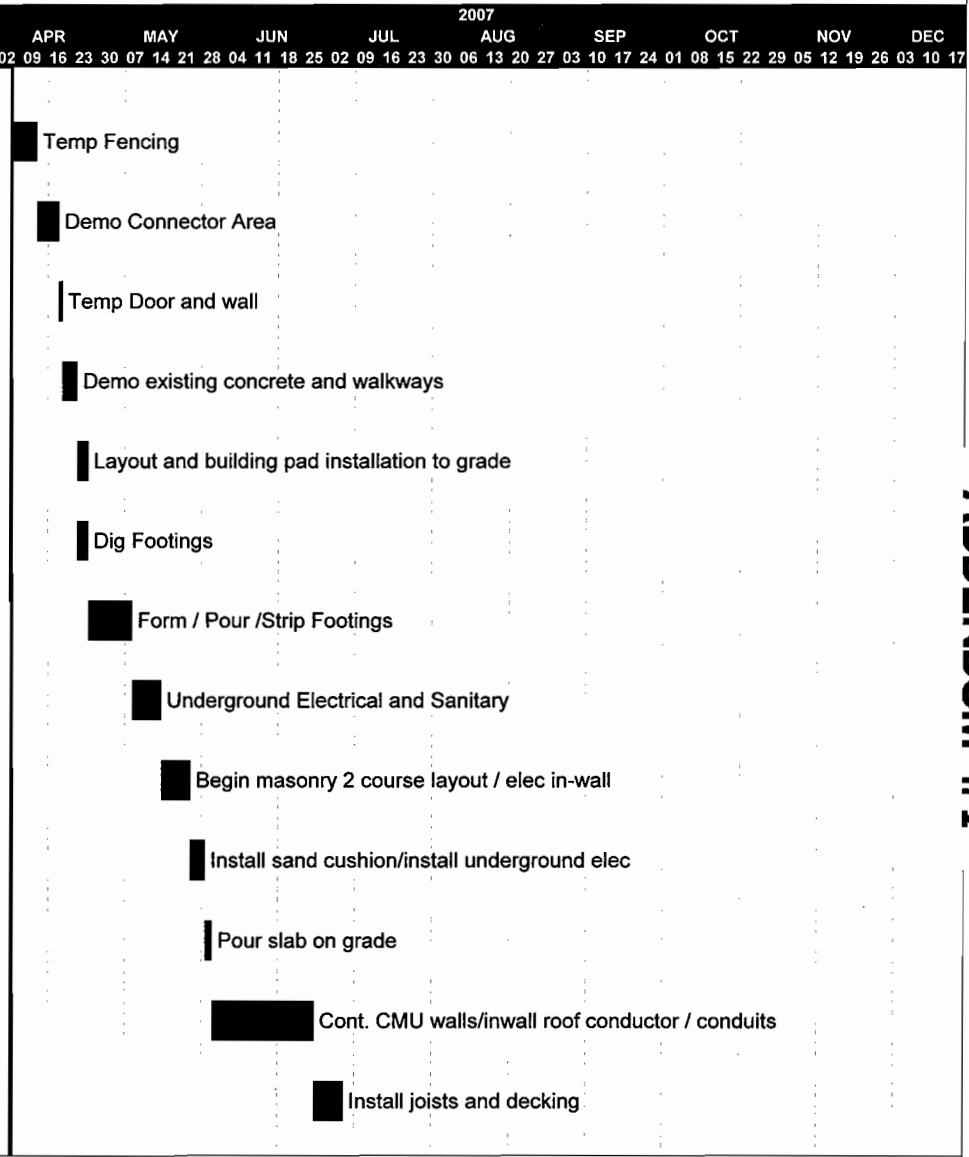

ADDENDUM #1

Start date	06APR07
Finish date	16OCT07
Data date	06APR07
Run date	07DEC06
Page number	1A

© Primavera Systems, Inc.

BARTON MALOW COMPANY
SMITH MIDDLE SCHOOL

- Early bar
- Target bar
- Progress bar
- Critical bar
- Summary bar
- Start milestone point
- Finish milestone point

SMITH MIDDLE SCHOOL

Act ID	Description	Orig Dur	Rem Dur	Early Start	Early Finish	Total Float
1120	Face Brick	10	10	06JUL07	19JUL07	34d
1160	Hydronic Piping	10	10	06JUL07	19JUL07	51d
1190	Install ductwork	8	8	06JUL07	17JUL07	99d
1140	Install roof curbs/roof nailers	3	3	20JUL07	24JUL07	34d
1180	Install window / doors	3	3	20JUL07	24JUL07	94d
1150	Install roofing	4	4	25JUL07	30JUL07	34d
1170	Set CU 101 / RTU 101	1	1	31JUL07	31JUL07	79d
1210	Install overhead conduits/whips/pull wire	10	10	31JUL07	13AUG07	34d
1200	Controls	10	10	01AUG07	14AUG07	79d
1220	Block fill and paint	4	4	14AUG07	17AUG07	76d
1230	Ceiling grid	4	4	14AUG07	17AUG07	34d
1240	Install FC 101	1	1	14AUG07	14AUG07	79d
1250	Lighting Installation	10	10	17AUG07	30AUG07	45d

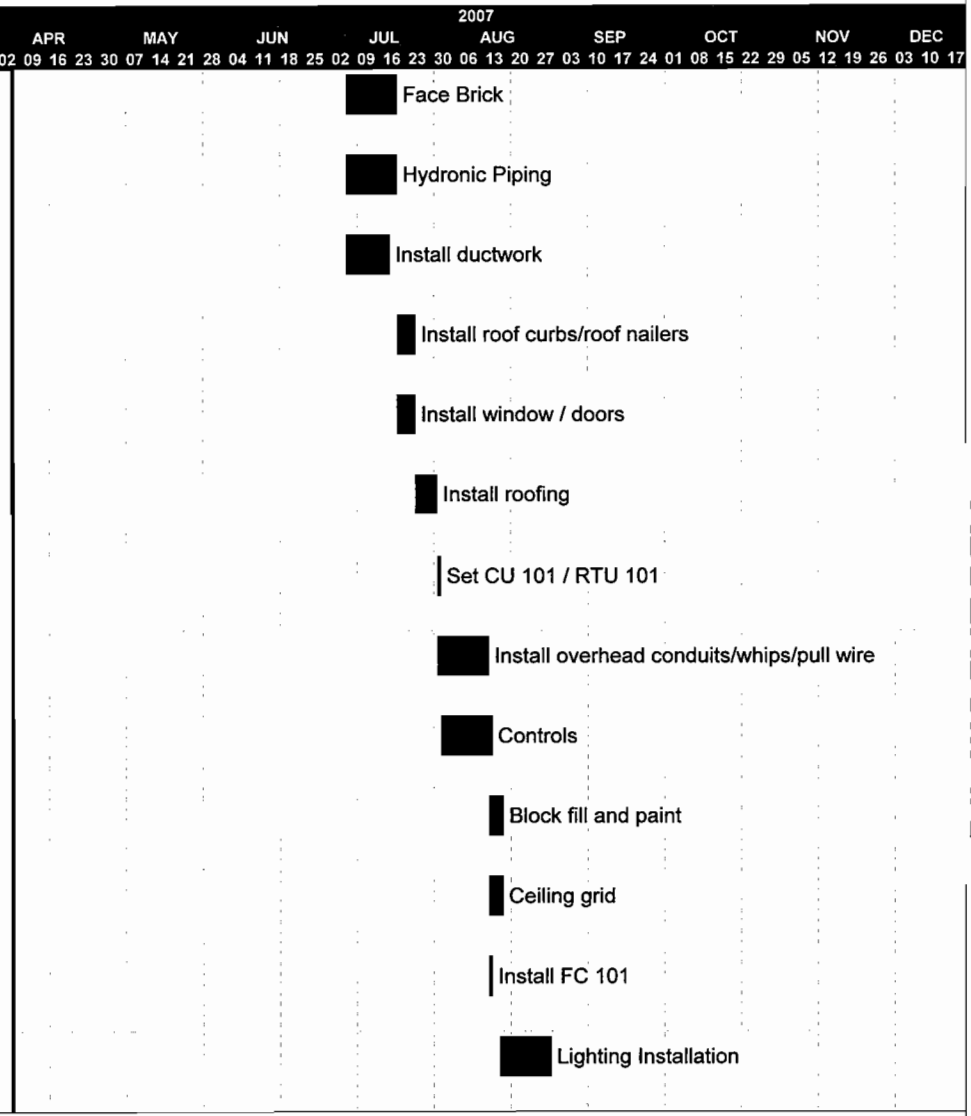

ADDENDUM #1

Start date	06APR07
Finish date	16OCT07
Data date	06APR07
Run date	07DEC06
Page number	2A
© Primavera Systems, Inc.	

BARTON MALOW COMPANY
SMITH MIDDLE SCHOOL

- Early bar
- Target bar
- Progress bar
- Critical bar
- Summary bar
- Start milestone point
- Finish milestone point

SMITH MIDDLE SCHOOL

Act ID	Description	Orig Dur	Rem Dur	Early Start	Early Finish	Total Float
1270	Install casework	8	8	20AUG07	29AUG07	34d
1290	Install carpet tile	5	5	30AUG07	05SEP07	34d
1260	Above ceiling inspections	10	10	31AUG07	13SEP07	45d
1320	Doors and hardware	4	4	06SEP07	11SEP07	34d
1670	Work Completion List	10	10	12SEP07	25SEP07	34d
1280	Install ceiling pads	4	4	14SEP07	19SEP07	50d
1300	Finish electrical	10	10	14SEP07	27SEP07	47d
1310	Mechanical Finishes	10	10	14SEP07	27SEP07	45d
1700	Final Electrical Inspection	5	5	14SEP07	20SEP07	52d
1330	Test and balance	2	2	20SEP07	21SEP07	51d
1690	OFS Inspection	1	1	20SEP07	20SEP07	50d
1720	Certificate of Occupancy Inspection	1	1	21SEP07	21SEP07	50d
1340	Punchlist	15	15	26SEP07	16OCT07	34d

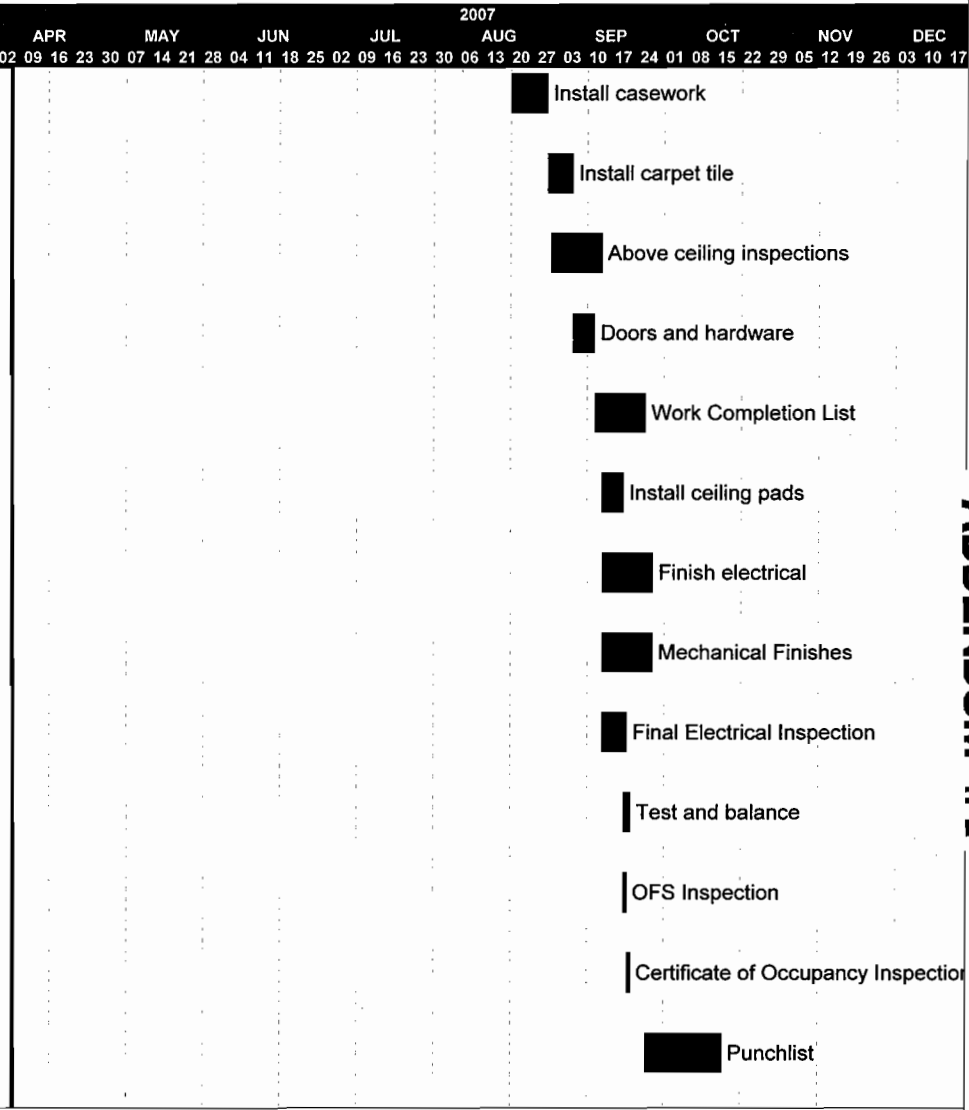

ADDENDUM #1

Start date	06APR07
Finish date	16OCT07
Data date	06APR07
Run date	07DEC06
Page number	3A

© Primavera Systems, Inc.

BARTON MALOW COMPANY
SMITH MIDDLE SCHOOL

- Early bar
- Target bar
- Progress bar
- Critical bar
- Summary bar
- Start milestone point
- Finish milestone point

SMITH MIDDLE SCHOOL

Act ID	Description	Orig Dur	Rem Dur	Early Start	Early Finish	Total Float
1710	Final Cleaning	2	2	26SEP07	27SEP07	46d
1680	Owner Demonstration	2	2	28SEP07	01OCT07	45d
1730	Building turned over to Owner	1	1	28SEP07	28SEP07	46d
Smith Parking Lot Renovation						
1750	Contractor Mobilize	0	0	18JUN07 *		82d
1760	Locate Utilities	1	1	18JUN07	18JUN07	82d
1770	Install Tree Protection	1	1	18JUN07	18JUN07	119d
1780	Install temp fencing	3	3	18JUN07	20JUN07	82d
1800	Install silt fencing	2	2	19JUN07	20JUN07	117d
1810	Install temp roadway	2	2	21JUN07	22JUN07	82d
1820	Install construction signage	1	1	25JUN07	25JUN07	114d
1830	Remove existing curbs and asphalt	6	6	25JUN07	02JUL07	82d
1840	Save Concrete bumper blocks for relocation	1	1	03JUL07	03JUL07	82d
1850	Layout for new asphalt	2	2	05JUL07	06JUL07	82d

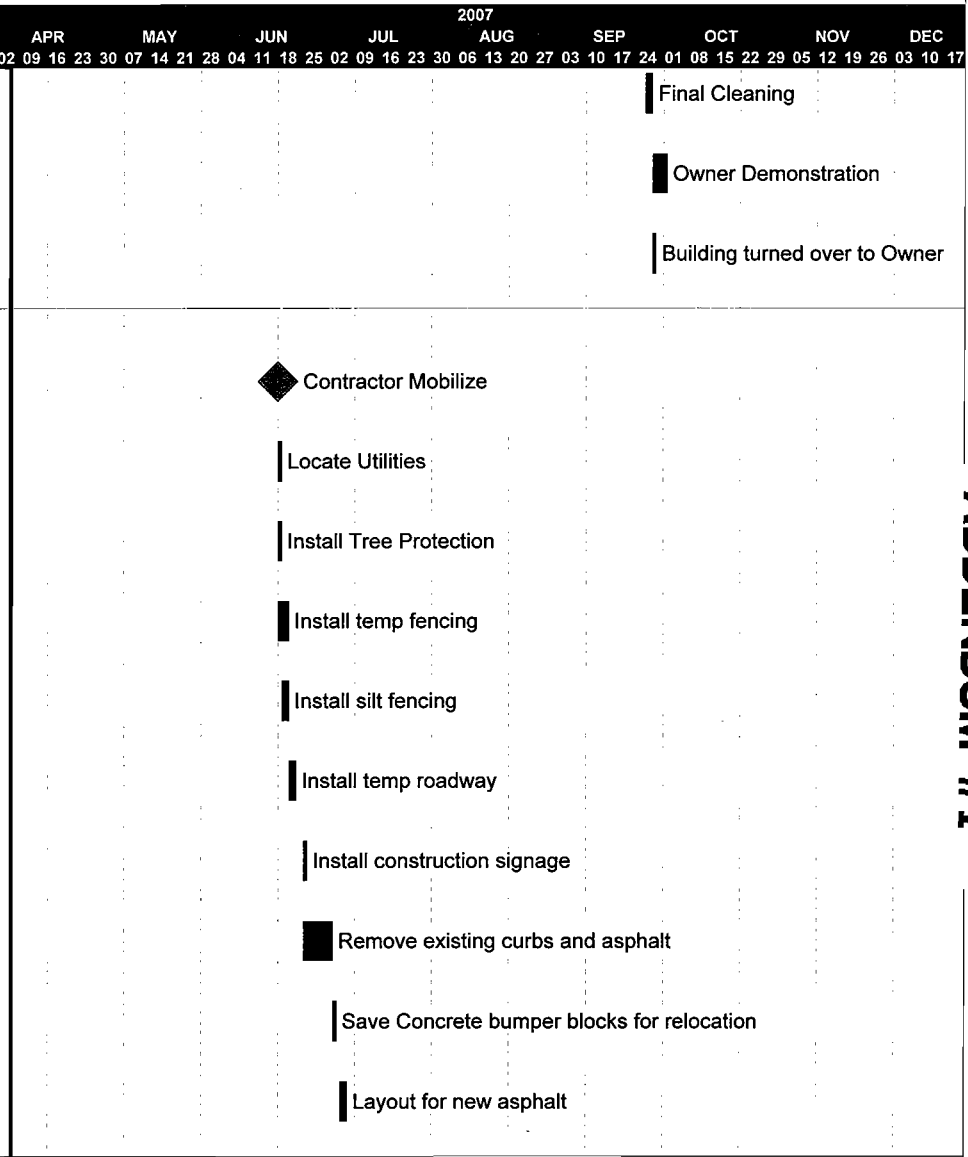

ADDENDUM #1

Start date	06APR07
Finish date	16OCT07
Data date	06APR07
Run date	07DEC06
Page number	4A
© Primavera Systems, Inc.	

BARTON MALOW COMPANY
SMITH MIDDLE SCHOOL

- Early bar
- Target bar
- Progress bar
- Critical bar
- Summary bar
- Start milestone point
- Finish milestone point

SMITH MIDDLE SCHOOL

Act ID	Description	Orig Dur	Rem Dur	Early Start	Early Finish	Total Float
1860	Establish subgrade for new asphalt area	5	5	09JUL07	13JUL07	82d
1880	Install new concrete walkways	5	5	16JUL07	20JUL07	82d
1870	Install new asphalt after compaction approval	2	2	23JUL07	24JUL07	94d
1890	Parking lot striping / graphics	4	4	23JUL07	26JUL07	82d
1900	Work Completion/Punchlist	10	10	27JUL07	09AUG07	82d
Smith Renovation						
2230	Summer Break - Students and Staff out of Bldg	0	0	15JUN07 *		121d
1920	Remove ceilings and ductwork	20	20	18JUN07	16JUL07	55d
2090	Suspend Lighting for temp purposes	5	5	18JUN07 *	22JUN07	55d
2210	Remove Bleachers	2	2	18JUN07 *	19JUN07	108d
2220	Install Bleachers	10	10	20JUN07	03JUL07	108d
1930	Demo unit ventilators, refer to plans	2	2	10JUL07	11JUL07	93d
1950	General Demolition	5	5	10JUL07	16JUL07	55d
1940	Remove unit ventilators	2	2	12JUL07	13JUL07	93d

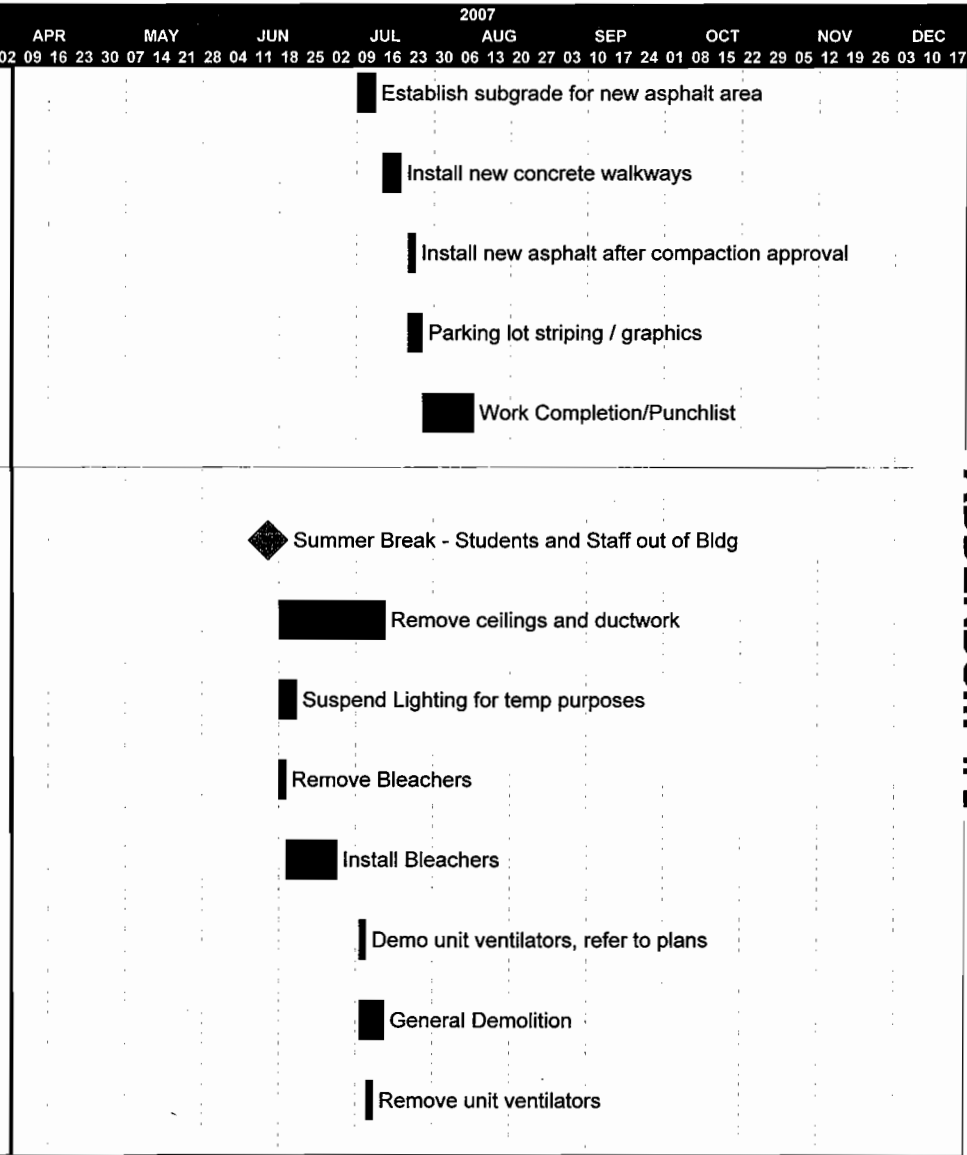

ADDENDUM #1

Start date	06APR07
Finish date	16OCT07
Data date	06APR07
Run date	07DEC06
Page number	5A

© Primavera Systems, Inc.

BARTON MALOW COMPANY
SMITH MIDDLE SCHOOL

- Early bar
- Target bar
- Progress bar
- Critical bar
- Summary bar
- Start milestone point
- Finish milestone point

SMITH MIDDLE SCHOOL

Act ID	Description	Orig Dur	Rem Dur	Early Start	Early Finish	Total Float
2070	Install new kitchen hood	2	2	12JUL07	13JUL07	101d
2130	Rough mechanical (above ceiling)	10	10	12JUL07	25JUL07	56d
2100	Salvage UV's	1	1	13JUL07	13JUL07	101d
1960	Install new louvers / repair / mechanical work	8	8	16JUL07	25JUL07	93d
1970	Build new stud walls	4	4	17JUL07	20JUL07	55d
1980	Underground plumbing tie-in	4	4	17JUL07	20JUL07	96d
1990	Install new doors interior / exterior	5	5	17JUL07	23JUL07	95d
2040	Install toilet paritions	8	8	17JUL07	26JUL07	92d
2060	Install gypsum ceilings / gypsum on walls	4	4	23JUL07	26JUL07	55d
2050	Install mechanical finishes	10	10	26JUL07	08AUG07	83d
2080	Interior painting	10	10	27JUL07	09AUG07	55d
2000	Reinstall grid ceilings	10	10	31JUL07	13AUG07	55d
2005	Main Office Renovation Substantially Complete				Aug 6,07	
2010	Install light fixtures / occupancy sensors	10	10	14AUG07	27AUG07	67d

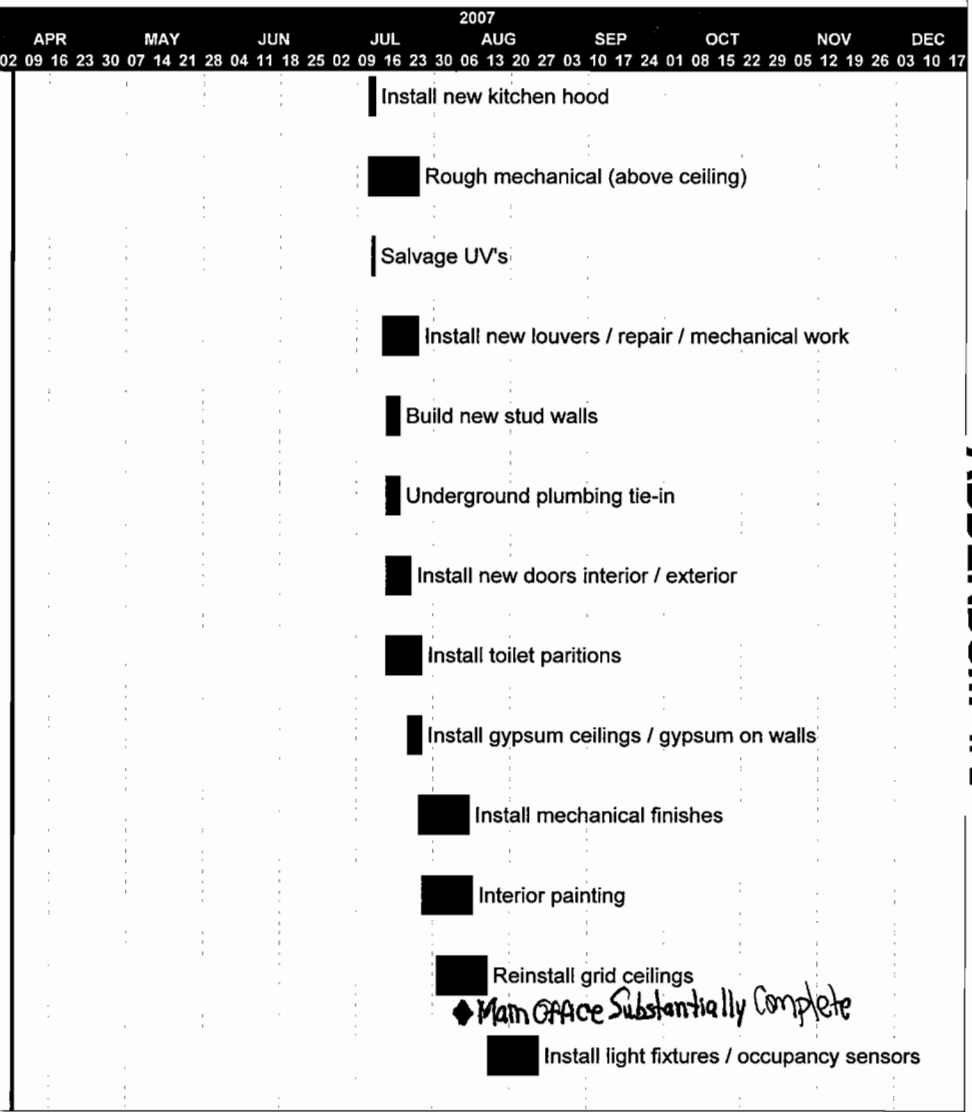

ADDENDUM #1

Start date	06APR07
Finish date	16OCT07
Data date	06APR07
Run date	07DEC06
Page number	6A

© Primavera Systems, Inc.

BARTON MALOW COMPANY
SMITH MIDDLE SCHOOL

- Early bar
- Target bar
- Progress bar
- Critical bar
- Summary bar
- Start milestone point
- Finish milestone point

SMITH MIDDLE SCHOOL

Act ID	Description	Orig Dur	Rem Dur	Early Start	Early Finish	Total Float
2020	Install casework	5	5	14AUG07	20AUG07	55d
2110	Grilles and Diffusers	1	1	14AUG07	14AUG07	79d
2030	Install flooring	4	4	15AUG07	20AUG07	75d
2120	Sinks	4	4	15AUG07	20AUG07	55d
2150	Work Completion List	10	10	21AUG07	03SEP07	55d
2190	Final Cleaning	2	2	21AUG07	22AUG07	73d
2180	Final Electrical Inspection	1	1	28AUG07	28AUG07	67d
1790	OFS Inspection	1	1	29AUG07	29AUG07	67d
2140	Owner Demonstration	1	1	30AUG07	30AUG07	67d
2170	C of O Inspection	1	1	30AUG07	30AUG07	67d
2200	Building Turned Over to Owner	0	0	30AUG07	29AUG07	68d
2160	Final Punchlist	10	10	04SEP07	17SEP07	55d

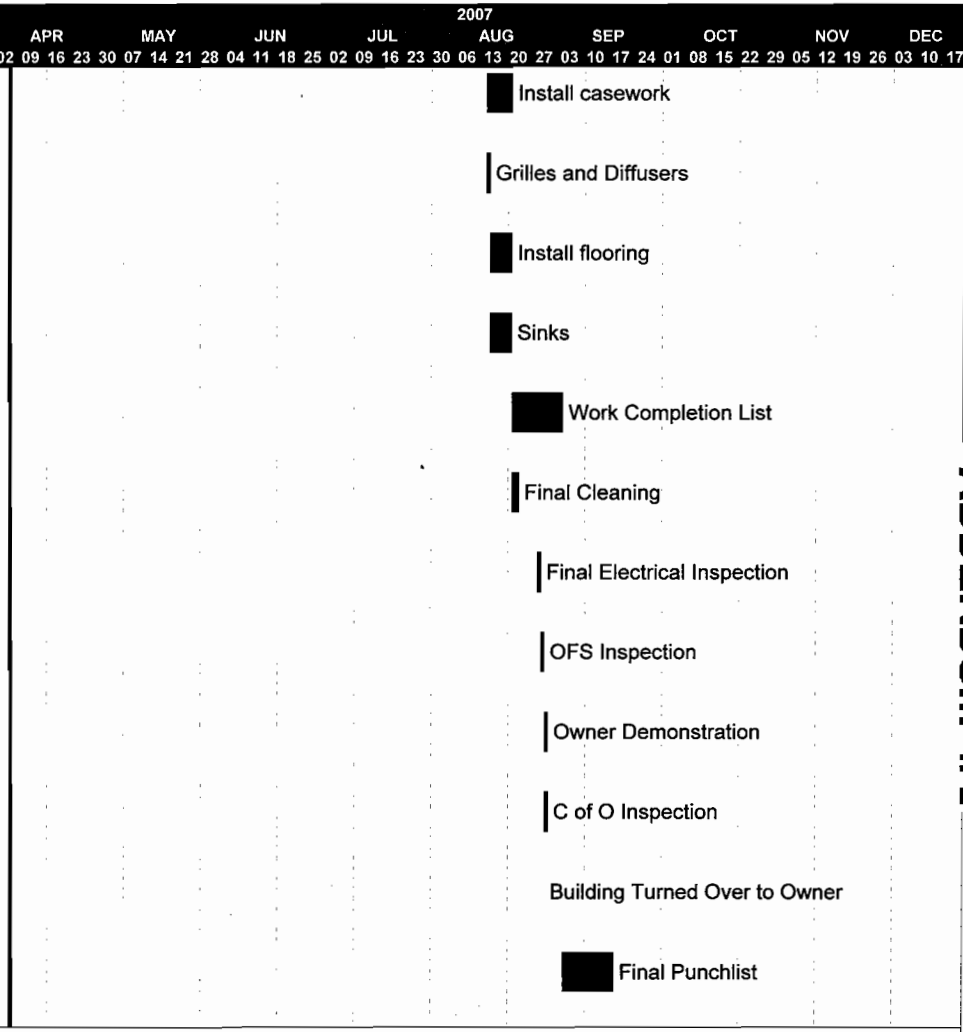

ADDENDUM #1

Start date	06APR07
Finish date	16OCT07
Data date	06APR07
Run date	07DEC06
Page number	7A

© Primavera Systems, Inc.

BARTON MALOW COMPANY
SMITH MIDDLE SCHOOL

- Early bar
- Target bar
- Progress bar
- Critical bar
- Summary bar
- Start milestone point
- Finish milestone point

Act ID	Description	Orig Dur	Early Start	Early Finish
SiteWork				
1000	Install Temp Construction Fencing	3	25JUN07 *	27JUN07
1005	Install SEC measures	2	28JUN07	29JUN07
1010	Demolish Existing Drop off Loop	8	02JUL07	12JUL07
1020	Install New Underground Drainage Piping	8	13JUL07	24JUL07
1030	Install New Curb, Asphalt, restore greenbelt	15	25JUL07	14AUG07
1040	Sweep new surface & stripe	3	15AUG07	17AUG07
Renovation 2007				
1051	Ductwork shop dwg approval & fabrication	91	16FEB07 *	22JUN07
1052	Lighting shop dwg approval & delivery	91	16FEB07 *	22JUN07
1053	Owner Pack/Vacate Units #5, #6, #7, #8, #9	5	18JUN07 *	22JUN07
1060	Contractors Mobilize for Demolition	0	25JUN07 *	
1070	Demo/Remove - Unit #9	5	25JUN07	29JUN07
1080	Demo/Remove - Unit #7 & #8	5	27JUN07	03JUL07
1090	Demo/Remove - Unit #5 & #6	5	29JUN07	06JUL07
1100	Unit #9: Install new Ductwork	10	02JUL07	16JUL07
1110	Unit #9: Adjust Sprink pipe/install new heads	3	09JUL07	11JUL07
1120	Unit #9: Install new Grid	5	12JUL07	18JUL07
1130	Unit #9: Install new Lighting	7	19JUL07	27JUL07
1140	Unit #9: Install new Diffusers	3	30JUL07	01AUG07
1145	Unit #9: Install new ACT	5	30JUL07	03AUG07
1155	Unit #9: Work Completion List/OWNER TURNOVER	5	06AUG07	10AUG07
1165	Unit #7 & #8: Install new Ductwork	10	05JUL07	18JUL07
1175	Unit #7 & #8: Adjust Sprink pipe/ new heads	3	11JUL07	13JUL07
1185	Unit #7 & #8: Install new Grid	5	16JUL07	20JUL07
1195	Unit #7 & #8: Install new Lighting	7	23JUL07	31JUL07
1205	Unit #7 & #8: Install new Diffusers	3	01AUG07	03AUG07
1215	Unit #7 & #8: Install new ACT	5	06AUG07	10AUG07
1225	Unit #7 & #8: Work Comp. List/OWNER TURNOVER	5	13AUG07	17AUG07
1235	Unit #5 & #6: Install new Ductwork	10	09JUL07	20JUL07
1245	Unit #5 & #6: Adjust Sprink pipe/new heads	3	13JUL07	17JUL07
1255	Unit #5 & #6: Install new Grid	5	18JUL07	24JUL07
1265	Unit #5 & #6: Install new Lighting	7	25JUL07	02AUG07
1275	Unit #5 & #6: Install Diffusers	3	03AUG07	07AUG07
1285	Unit #5 & #6: Install new ACT	5	08AUG07	14AUG07
1295	Unit #5 & #6: Work Comp List/OWNER TURNOVER	5	15AUG07	21AUG07
1305	INSPS: Final Elec, OFS, Temp CofO	6	22AUG07	29AUG07

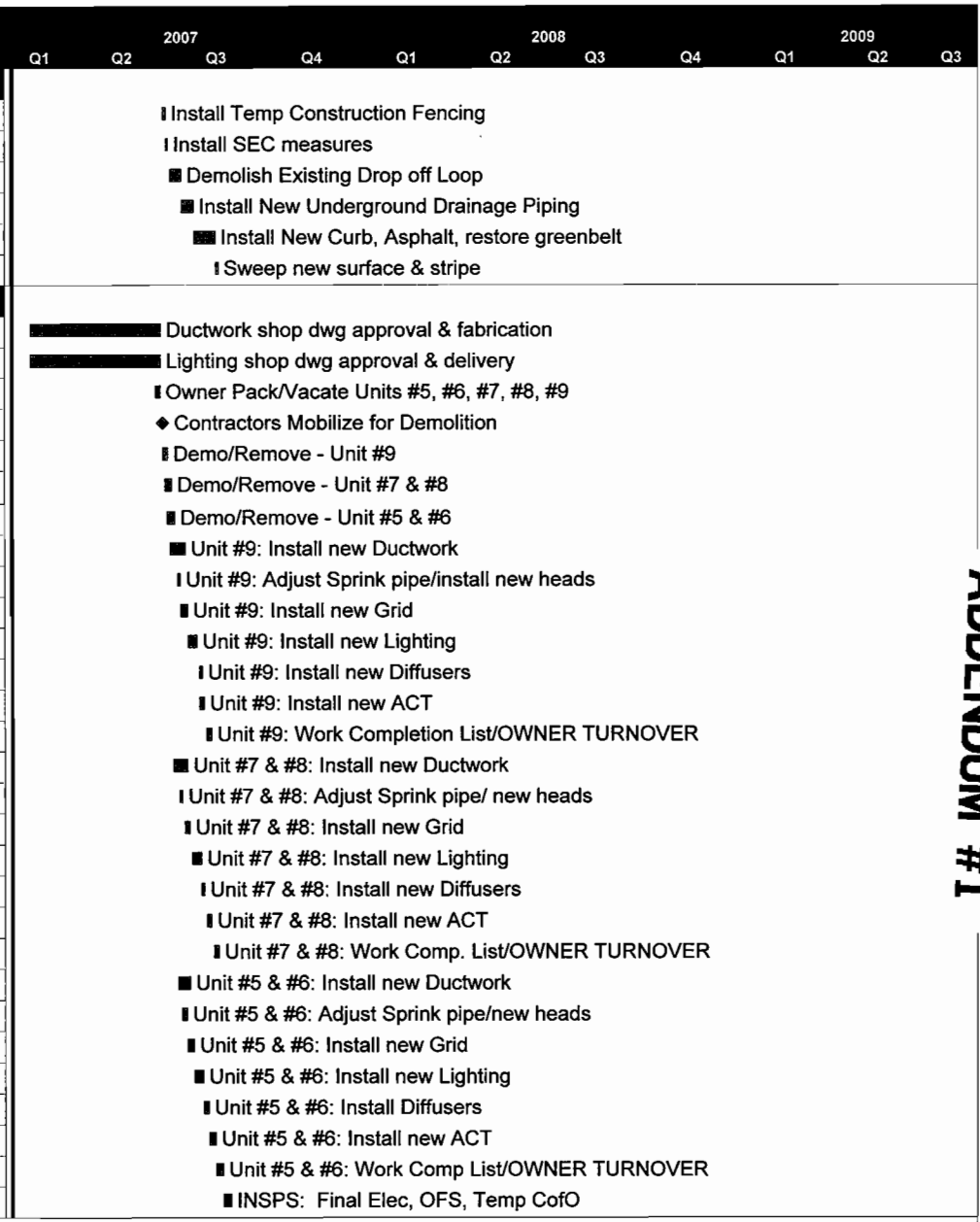

ADDENDUM #1

Start date	29JAN07
Finish date	22AUG08
Data date	29JAN07
Run date	07DEC06
Page number	1A

© Primavera Systems, Inc.

Barton Malow Company
Boulan Park Middle School

Early bar
Progress bar
Critical bar
Summary bar
Start milestone point
Finish milestone point

Act ID	Description	Orig Dur	Early Start	Early Finish
Renovation 2008				
1315	Owner Pack/Vacate units #1, #2, #3, #4	5	16JUN08 *	20JUN08
1325	Contractors Mobilize for Demolition	0	23JUN08	
1335	Demo/Remove - Unit #4	5	23JUN08	27JUN08
1345	Demo/Remove - Unit #1& #2	5	25JUN08	01JUL08
1355	Demo/Remove - Unit #3	5	27JUN08	03JUL08
1365	Unit #4: Install new Ductwork	10	30JUN08	14JUL08
1375	Unit #4: Adjust Sprink pipe/install new heads	3	07JUL08	09JUL08
1385	Unit #4: Install Grid	5	10JUL08	16JUL08
1395	Unit #4: Install Lighting	7	17JUL08	25JUL08
1405	Unit #4: Install Diffusers	3	28JUL08	30JUL08
1415	Unit #4: Install ACT	5	31JUL08	06AUG08
1425	Unit #4: Work Comp List/OWNER TURNOVER	5	07AUG08	13AUG08
1435	Unit #1 & #2: Install new Ductwork	10	02JUL08	16JUL08
1445	Unit #1 & #2: Adjust Sprink pipe/new heads	3	09JUL08	11JUL08
1455	Unit #1 & #2: Install Grid	5	14JUL08	18JUL08
1465	Unit #1 & #2: Install Lighting	7	21JUL08	29JUL08
1475	Unit #1 & #2: Install Diffusers	3	30JUL08	01AUG08
1485	Unit #1 & #2: Install ACT	5	04AUG08	08AUG08
1495	Unit #1 & #2: Work Comp List/OWNER TURNOVER	5	11AUG08	15AUG08
1505	Unit #3: Install new Ductwork	10	07JUL08	18JUL08
1515	Unit #3: Adjust Sprink pipe/install new heads	3	11JUL08	15JUL08
1525	Unit #3: Install Grid	5	16JUL08	22JUL08
1535	Unti #3: Install Lighting	7	23JUL08	31JUL08
1545	Unit #3: Install Diffusers	3	29JUL08	31JUL08
1555	Unit #3: Install ACT	5	01AUG08	07AUG08
1565	Unit #1 & #2: Work Comp List/OWNER TURNOVER	5	08AUG08	14AUG08
1575	INSPS: Final Elec, OFS, Final CofO	6	15AUG08	22AUG08

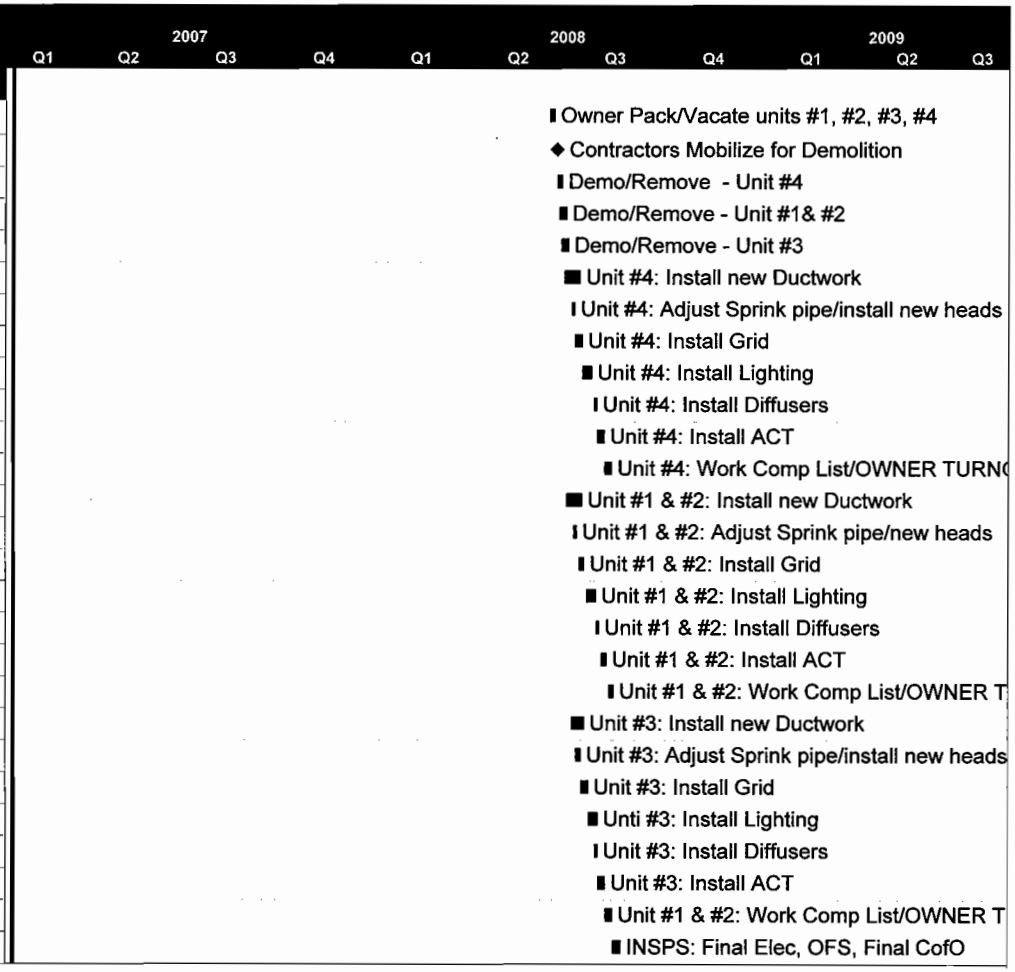

Start date	29JAN07
Finish date	22AUG08
Data date	29JAN07
Run date	07DEC06
Page number	2A

© Primavera Systems, Inc.

Barton Malow Company
Boulan Park Middle School

Early bar
Progress bar
Critical bar
Summary bar
Start milestone point
Finish milestone point

ADDENDUM #1

Act ID	Description	Orig Dur	Early Start	Early Finish
Renovation 2007				
1051	Ductwork shop dwg approval & fabrication	91	16FEB07 *	22JUN07
1052	Lighting shop dwg approval & delivery	91	16FEB07 *	22JUN07
1053	Owner Pack/Vacate Units #5, #6, #7, #8, #9	5	18JUN07 *	22JUN07
1060	Contractors Mobilize for Demolition	0	25JUN07 *	
1070	Demo/Remove - Unit #9	5	25JUN07	29JUN07
1080	Demo/Remove - Unit #7, #8	5	27JUN07	03JUL07
1090	Demo/Remove - Unit #5, #6	5	29JUN07	06JUL07
1100	Unit #9: Install new Ductwork	10	02JUL07	16JUL07
1110	Unit #9: Adjust Sprink pipe/install new heads	3	09JUL07	11JUL07
1120	Unit #9: Install new Grid	5	12JUL07	18JUL07
1130	Unit #9: Install new Lighting	7	19JUL07	27JUL07
1140	Unit #9: Install new Diffusers	3	30JUL07	01AUG07
1145	Unit #9: Install new ACT	5	30JUL07	03AUG07
1155	Unit #9: Work Completion List/OWNER TURNOVER	5	06AUG07	10AUG07
1165	Unit #7 & #8: Install new Ductwork	10	05JUL07	18JUL07
1175	Unit #7 & #8: Adjust Sprink pipe/new heads	3	11JUL07	13JUL07
1185	Unit #7 & #8: Install new Grid	5	16JUL07	20JUL07
1195	Unit #7 & #8: Install new Lighting	7	23JUL07	31JUL07
1205	Unit #7 & #8: Install new Diffusers	3	01AUG07	03AUG07
1215	Unit #7 & #8: Install new ACT	5	06AUG07	10AUG07
1225	Unit #7 & #8: Work Comp List/OWNER TURNOVER	5	13AUG07	17AUG07
1235	Unit #5 & #6: Install new Ductwork	10	09JUL07	20JUL07
1245	Unit #5 & #6: Adjust Sprink pipe/new heads	3	13JUL07	17JUL07
1255	Unit #5 & #6: Install new Grid	5	18JUL07	24JUL07
1265	Unit #5 & #6: Install new Lighting	7	25JUL07	02AUG07
1275	Unit #5 & #6: Install Diffusers	3	03AUG07	07AUG07
1285	Unit #5 & #6: Install new ACT	5	08AUG07	14AUG07
1295	Unit #5 & #6: Work Comp List/OWNER TURNOVER	5	15AUG07	21AUG07
1305	INSPS: Final Elec, OFS, Temp CofO	6	22AUG07	29AUG07
Renovation 2008				
1315	Owner Pack/Vacate units #1, #2, #3, #4	5	16JUN08 *	20JUN08
1325	Contractors Mobilize for Demolition	0	23JUN08	
1335	Demo/Remove - Unit #4	5	23JUN08	27JUN08
1345	Demo/Remove - Unit #1 & #2	5	25JUN08	01JUL08
1355	Demo/Remove Unit #3	5	27JUN08	03JUL08
1365	Unit #4: Install new Ductwork	10	30JUN08	14JUL08

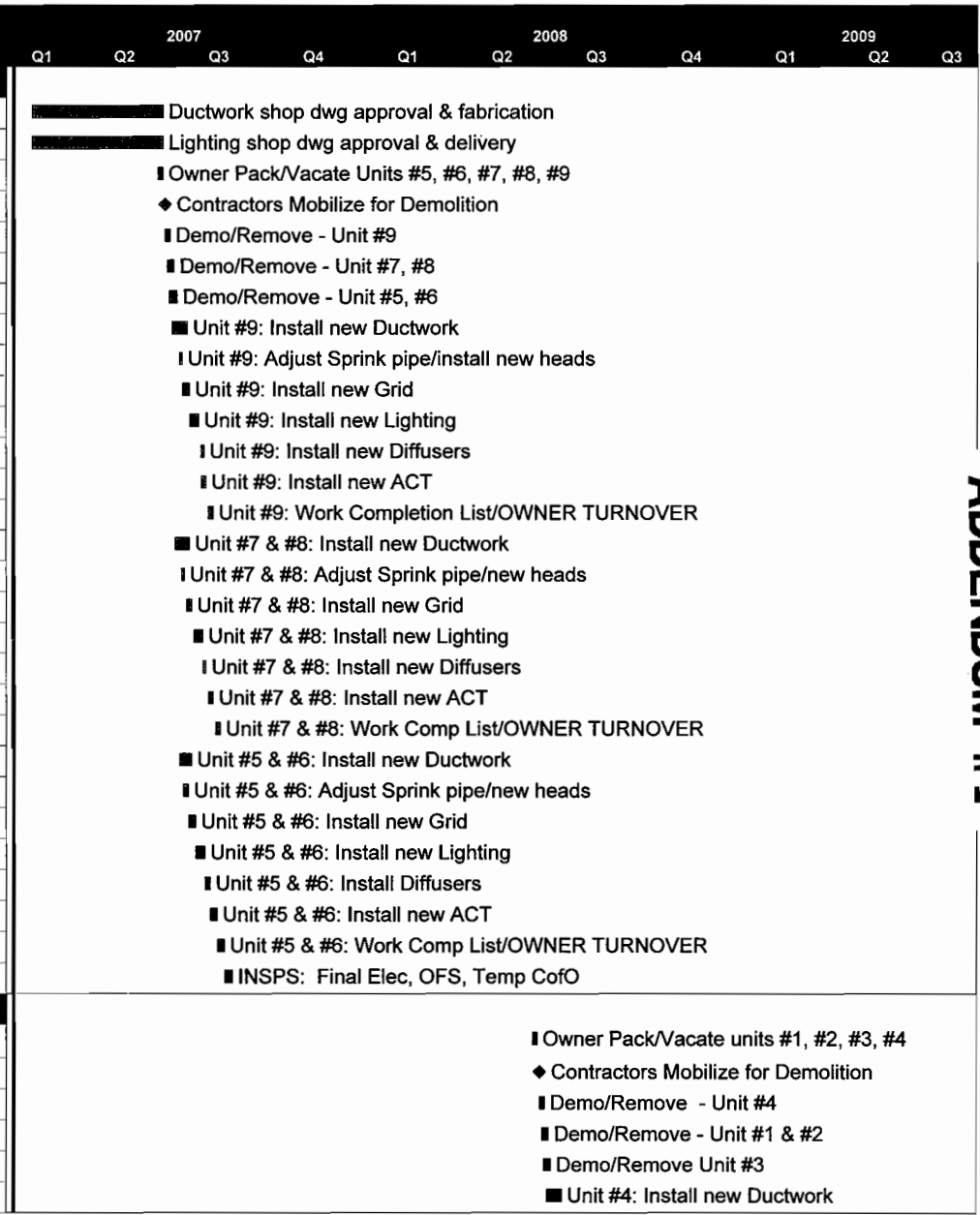

ADDENDUM #1

Start date	29JAN07
Finish date	22AUG08
Data date	29JAN07
Run date	07DEC06
Page number	1A

© Primavera Systems, Inc.

Barton Malow Company
Larson Middle School

Early bar
Progress bar
Critical bar
Summary bar
Start milestone point
Finish milestone point

Act ID	Description	Orig Dur	Early Start	Early Finish
1375	Unit #4: Adjust Sprink pipe/install new heads	3	07JUL08	09JUL08
1385	Unit #4: Install Grid	5	10JUL08	16JUL08
1395	Unit #4: Install Lighting	7	17JUL08	25JUL08
1405	Unit #4: Install Diffusers	3	28JUL08	30JUL08
1415	Unit #4: Install ACT	5	31JUL08	06AUG08
1425	Unit #4: Work Completion List/OWNER TURNOVER	5	07AUG08	13AUG08
1435	Unit #1 & #2: Install new Ductwork	10	02JUL08	16JUL08
1445	Unit #1 & #2: Adjust Sprink pipe/new heads	3	09JUL08	11JUL08
1455	Unit #1 & #2: Install Grid	5	14JUL08	18JUL08
1465	Unit #1 & #2: Install Lighting	7	21JUL08	29JUL08
1475	Unit #1 & #2: Install Diffusers	3	30JUL08	01AUG08
1485	Unit #1 & #2: Install ACT	5	04AUG08	08AUG08
1495	Unit #1 & #2: Work Comp List/OWNER TURNOVER	5	11AUG08	15AUG08
1505	Unit #3: Install new Ductwork	10	07JUL08	18JUL08
1515	Unit #3: Adjust Sprink pipe/install new heads	3	11JUL08	15JUL08
1525	Unit #3: Install Grid	5	16JUL08	22JUL08
1535	Unti #3: Install Lighting	7	23JUL08	31JUL08
1545	Unit #3: Install Diffusers	3	29JUL08	31JUL08
1555	Unit #3: Install ACT	5	01AUG08	07AUG08
1565	Unit #3: Work Completion List/OWNER TURNOVER	5	08AUG08	14AUG08
1575	INSPS: Final Elec, OFS, Final CofO	6	15AUG08	22AUG08

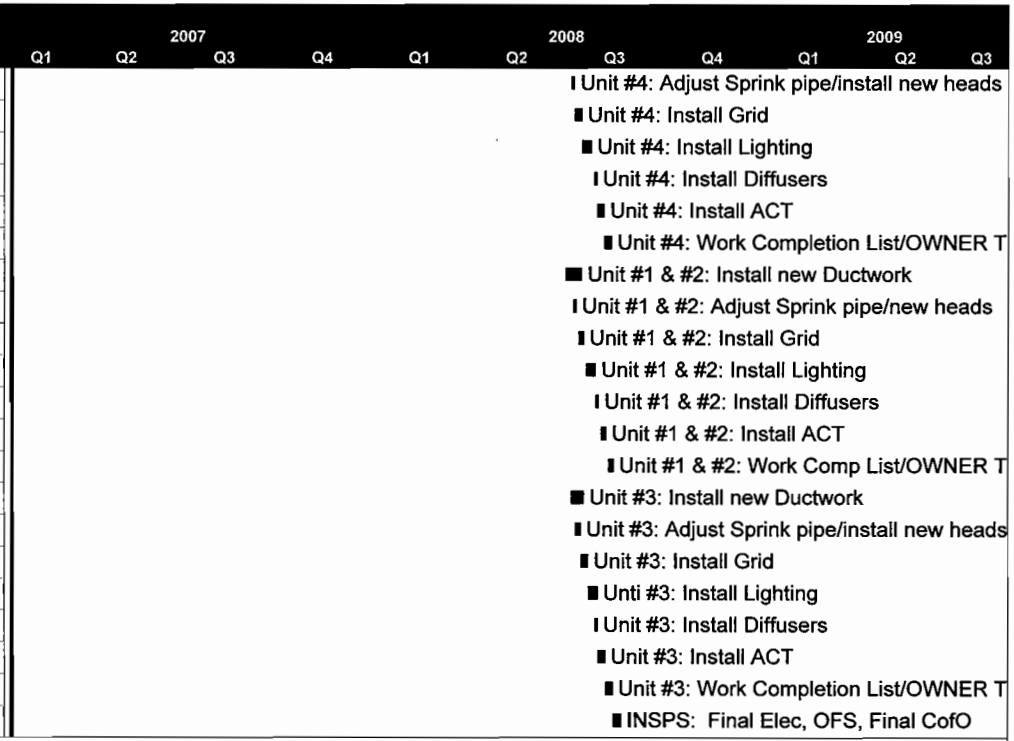

ADDENDUM #1

Start date	29JAN07
Finish date	22AUG08
Data date	29JAN07
Run date	07DEC06
Page number	2A

© Primavera Systems, Inc.

Barton Malow Company
Larson Middle School

- Early bar
- Progress bar
- Critical bar
- Summary bar
- Start milestone point
- Finish milestone point

SECTION 00400
BID PROPOSAL FORM
(Submit in Triplicate)

DATE: _____

TO: **Troy School District**
4400 Livernois Road
Troy, MI. 48098

PROJECT: **Phase I–Three Middle Schools**
Remodeling & Addition
Bid Package No. 9361

Attn: **Barton Malow Company**
1301 Boyd
Troy, MI 48083
Call 248-823-4631, with any questions

Architect: **Kingscott Associates, Inc.**

FROM:

Name of Bidder: _____

Business Address: _____

_____

Phone Number: _____

Fax Number: _____

Bid Proposal for Category(ies): _____

Bidder, in compliance with the **Advertisement to Bid** for construction contemplated for **Bid Package No. 9361 Phase I – Three Middle Schools Remodeling & Addition** having carefully examined the Bidding Documents and the site of the proposed Project and the conditions affecting the proposed Work in the Bid Category(ies) including the condition of the Project site, any surface or subsurface obstruction, the actual levels, all excavating, filling in, removal and demolition, measurements and quantities involved in the Work, the availability of labor, materials and equipment, and the weather conditions that may possibly may be experienced in the Project vicinity, proposes to furnish all labor, materials, tools, equipment, machinery, equipment rental, transportation, superintendence, and services as are necessary to perform all Work in the Bid Category(ies) stated in accordance with the Contract Documents for the Base Bid and Alternate amounts stated below.

If identified as one of the apparent lowest responsive, responsible bidder(s) for a Bid Category Bidder agrees to meet immediately with the Barton Malow Company and shall submit post bid information as described in Section 00200 Instructions to Bidders.

Bidder, if awarded a contract, agrees to: (1) execute the Agreement within fifteen (15) days of receiving notice of the award; (2) provide performance/payment bonds and insurance certificates in full compliance with the Contract Documents, (3) submit the Project Safety Program as described in Section 00200 Instructions to Bidders; (4) commence Work upon execution of the Agreement or at such other time as directed in the notice of award, and (5) to complete its Work in accordance with the Contract Documents and within the milestone activity dates and durations set

forth in the Bidding Documents and subsequent construction project master schedule established by Barton Malow Company.

In the event Bidder defaults in complying with any portion of this paragraph, Bidder specifically agrees that the entire bid security amount shall become the property of **Troy School District** as liquidated damages constituting the reasonable estimate of the damages that Troy School District would incur for delays and additional expenses in the event of such default, and not as a penalty.

BASE BID: Bidder agrees to perform all Work for Bid Category(ies) as described in the Contract Documents, for the Base Bid(s) stated below. The Base Bid(s) shall include the cost of Performance and Payment Bonds. For each Bid Category to be bid, include the Base Bid, written and in figures, the cost of the Performance Bond and Payment Bond which is included in the Base Bid, written and in figures, and the Bid Category and description. The cost of the Performance Bond and Payment Bond shall be treated as a deduct Alternate should the Owner and Barton Malow Company decide to waive the requirement for the successful Bidder providing same.

(Show amounts in both words and figures. In case of discrepancy, amount shown in words will govern).

BASE BID MUST INCLUDE BID AMOUNTS FOR ALL OF PHASE I MIDDLE SCHOOLS. BIDS THAT DO NOT INCLUDE A PRICE FOR ALL WORK WILL NOT BE ACCEPTED.

BID CATEGORY	WRITTEN DESCRIPTION/AMOUNT(S)	BID AMOUNT IN FIGURES
1. Bid Category No. _____		
Base Bid (including bond)	_____ DOLLARS	$ _____
Amount included for bond	_____ DOLLARS	$ _____

COMBINED BID: Bidder agrees to perform all Work necessary to complete the Work in Bid Categories _____, _____, _____, in full accordance with the Contract Documents, for the lump sum of:

COMBINED BID AMOUNT	WRITTEN DESCRIPTION AMOUNT(S)	BID AMOUNT IN FIGURES
Base Bid (including bond)	_____ DOLLARS	$ _____
Amount included for bond	_____ DOLLARS	$ _____

ALTERNATES: The following Alternate(s) to Base Bid(s) are required to be offered by the respective bidders. **Further description of these alternates can be found in Kingscott Specification Section 01230 Alternate.** In the event the Alternate is accepted, Bidder agrees to perform all Work necessary to complete the Work as modified by the Alternate in full accordance with the Contract Documents, for the following add or deduct from the Base Bid as indicated: (Show amount(s) in both words and figures for Alternates. In case of discrepancy, amount shown in words will govern.)

ALTERNATES:

B-E1 (Boulan Park MS)

BID CATEGORY	WRITTEN DESCRIPTION OF ALTERNATE AMOUNT(S)	ADD	DEDUCT
16.1		$	$

For the amount of: _____ DOLLARS

B-E2 (Boulan Park MS)

BID CATEGORY	WRITTEN DESCRIPTION OF ALTERNATE AMOUNT(S)	ADD	DEDUCT
16.1		$	$

For the amount of: _____ DOLLARS

B-E3 (Boulan Park MS)

BID CATEGORY	WRITTEN DESCRIPTION OF ALTERNATE AMOUNT(S)	ADD	DEDUCT
16.1		$	$

For the amount of: _____ DOLLARS

B-M1 (Boulan Park MS)

BID CATEGORY	WRITTEN DESCRIPTION OF ALTERNATE AMOUNT(S)	ADD	DEDUCT
15.1		$	$

For the amount of: _____ DOLLARS

L-E1 (Larson MS)

BID CATEGORY	WRITTEN DESCRIPTION OF ALTERNATE AMOUNT(S)	ADD	DEDUCT
16.1		$	$

For the amount of: _____ DOLLARS

L-E2 (Larson MS)

BID CATEGORY	WRITTEN DESCRIPTION OF ALTERNATE AMOUNT(S)	ADD	DEDUCT
16.1		$	$

For the amount of: _____ DOLLARS

L-E3 (Larson MS)

BID CATEGORY	WRITTEN DESCRIPTION OF ALTERNATE AMOUNT(S)	ADD	DEDUCT
16.1		$	$

For the amount of: _____ DOLLARS

L-M1 (Larson MS)

BID CATEGORY	WRITTEN DESCRIPTION OF ALTERNATE AMOUNT(S)	ADD	DEDUCT
15.1		$	$

For the amount of: _____ DOLLARS

S-1 (Smith MS)

BID CATEGORY	WRITTEN DESCRIPTION OF ALTERNATE AMOUNT(S)	ADD	DEDUCT
6.1		$	$

For the amount of: _____

_____ DOLLARS

S-2 (Smith MS)

BID CATEGORY	WRITTEN DESCRIPTION OF ALTERNATE AMOUNT(S)	ADD	DEDUCT
6.1		$	$

For the amount of: _____

_____ DOLLARS

S-E1 (Smith MS)

BID CATEGORY	WRITTEN DESCRIPTION OF ALTERNATE AMOUNT(S)	ADD	DEDUCT
16.1		$	$

For the amount of: _____

_____ DOLLARS

S-E2 (Smith MS)

BID CATEGORY	WRITTEN DESCRIPTION OF ALTERNATE AMOUNT(S)	ADD	DEDUCT
16.1		$	$

For the amount of: _____

_____ DOLLARS

S-E3 (Smith MS)

BID CATEGORY	WRITTEN DESCRIPTION OF ALTERNATE AMOUNT(S)	ADD	DEDUCT
16.1		$	$

For the amount of: _____

_____ DOLLARS

S-E4 (Smith MS)

BID CATEGORY	WRITTEN DESCRIPTION OF ALTERNATE AMOUNT(S)	ADD	DEDUCT
16.1		$	$

For the amount of: _____ DOLLARS

S-E5 (Smith MS)

BID CATEGORY	WRITTEN DESCRIPTION OF ALTERNATE AMOUNT(S)	ADD	DEDUCT
16.1		$	$

For the amount of: _____ DOLLARS

VOLUNTARY ALTERNATES: The following Voluntary Alternates are offered by the Bidder. Bidder agrees that the amounts indicated below shall be added to or deducted from the Base Bid, as indicated, for each voluntary Alternate that is accepted.

(Show amount(s) in both words and figures for voluntary alternates. In case of discrepancy, amount shown in words will govern.)

BID CATEGORY	WRITTEN DESCRIPTION OF VOLUNTARY ALTERNATE AMOUNT(S)	ADD	DEDUCT
1.		$	$
	For the amount of: _____ DOLLARS		
2.		$	$
	For the amount of: _____ DOLLARS		
3.		$	$
	For the amount of: _____ DOLLARS		

UNIT PRICES: The following Unit Prices to Base Bid Categories are required to be offered by the respective Bidders. Bidder agrees that the following amounts will be used in determining contract changes from the Base Bid for authorized Changes in the Work. Bidder shall not include these unit costs in the Base Bid amount(s). **[All unit prices shall include Bidder's mark-up for overhead and profit.]**

	BID CATEGORY CODE	DESCRIPTION OF UNIT PRICE	UNIT PRICE ADD	UNIT PRICE DEDUCT
1.	2.1	21 AA Limestone cu. yd.	$	$
2.	2.1	Topsoil cu. yd.	$	$
3.	2.1	Import engineered fill cu. yd.	$	$
4.	2.1	Export existing unsuitable soils cu. yd.	$	$
5.	2.1	Sidewalk lineal ft. (5 x 5)	$	$
6.	2.1	Asphalt	$	$
7.	3.1	Concrete 3000 PSI cu. yd.	$	$
8.	6.1	Replace 2 x 2 ceiling tile (only)	$	$
9.	6.1	Replace ceiling grid (only)	$	$
10.	6.1	Relocate projection screen	$	$
11.	9.3	Rubber base installation	$	$

All applicable taxes and bond costs are included in the above Base Bid and all listed Alternates and Unit Prices.

Bid Security in the form of a bid bond from a qualified surety ( ), certified check ( ), or cashier's check ( ), (check one) accompanies this proposal in the amount of five (5) percent of the Base Bid amount(s). Bidder agrees that this Bid Proposal shall be irrevocable for a period of **ninety (90)** days after the day and time designated for receipt of the Bid Proposal in Section 00100 of the Project Manual.

As of the date of submission of the Bid Proposal, Bidder's worker's compensation Experience Modification Rate (EMR) for the state in which the Work is to be performed is _____._____. Bidder has attached to the Bid Proposal form the following (3) forms:

1.) OSHA Form 300 indicating recordable incidence rates for the last calendar year per 200,000 man-hours for the following categories:

1) Total Cases _____
2) Lost Workday Cases _____
3) Non-fatal Cases Without Lost Workdays _____
4) Employee Hours Worked Last Year _____
5) Fatalities in the last year (if yes describe below)

_____
_____
_____

2.) Affidavit of Bidder (Familial Relationship Disclosure) Form located in section 00410, and
3.) Affidavit of Bidder (Compliance with School Safety Initiative Legislation) Form

Has Bidder been cited by state of federal OSHA for any serious or willful violation? If yes, please describe:

_____
_____
_____

Bidder understands that **Troy School District** reserves the right to reject any or all Bid Proposals and to waive any informalities or irregularities therein.

Bidder acknowledges receipt of the following Addenda (identify no. and date of each): _____

_____

Bidder acknowledges receipt of the pre-bid conference minutes dated _____

_____

If awarded a contract, Bidder's surety will be _____.

Check

☐ I have included a fully executed and notarized copy of the familial disclosure form set forth in Section 00410 of this Project Manual with my Bid Proposal.

Bidder accepts the provisions of the Bidding and Contract Documents and certifies that this Bid Proposal is submitted in good faith and without collusion with any other person or entity submitting a Bid Proposal for the Work. If Bidder is required to be licensed in the state where the work is performed add "Bidder certifies that it meets all licensing requirements of the state in which work is to be performed, its current license number and classification are as follows:_____". Bidder hereby affixes its authorized signature(s) representing (check one):

_____ An individual doing business as _____
_____ A partnership
_____ A limited liability company, organized in _____ (enter state)
_____ A corporation, organized in _____ (enter state)
_____ Joint venture formed between _____ and _____
(Signature from authorized representatives of each partner are required)

Signature(s): _____ Title: _____

_____ Title: _____

Name of firm: _____

Business address: _____

_____

Telephone no.: ( ) _____

END OF SECTION 00400

SECTION 01210
ALLOWANCES

The following is a list of the allowances for the Troy School District Phase I – Three Middle Schools Remodeling & Addition (Boulan Park, Larson & Smith) BP #9361 project, as taken from the work scopes (section 00220).

WORK SCOPE SECTION	DESCRIPTION	AMOUNT
2.1 - Sitework	Maintenance of stone paths at Smith Middle School, to be used at Barton Malow's discretion.	$15,000
	To cover the cost of permit fees.	$3,000
3.1 - Concrete	*To be used as directed by Barton Malow.*	*$3,000*
4.1 – Masonry	To be used as directed by Barton Malow.	$3,000
5.1 – Structural Steel	To be used for miscellaneous steel as directed by BMC.	$1,000
6.1 – Carpentry and Acoustical Ceilings	*To be used on a time and material basis as directed by BMC.*	*$12,000*
7.1 – Roofing	-	N/A
8.1 – Glazing & Metal Wall Panels	-	N/A
9.1 – Painting	To cover the cost of touch-up painting needed following owner move in, or as directed by BMC.	$3,000
9.2 – Ceramic Tile	To be used at Barton Malow's discretion.	$2,000
9.3 – Carpet, Resilient Tile and Base	To be used as directed by BMC.	$4,000
12.1 – Telescoping Stands	-	N/A
12.2 – Gym Equipment	-	N/A
15.1 – Mechanical	-	N/A
15.2 – Temperature and Lighting Controls	-	N/A
15.3 - Mechanical Testing and Balancing	-	N/A

16.1 – Electrical	To be used at Barton Malow's discretion.	$200,000

END OF SECTION 01210

SECTION 01330
SUBMITTALS

PART 1 - GENERAL

1.01 RELATED DOCUMENTS

A. Specific attention is directed to all Bidding and Contract Requirements, and to Division 1, General Requirements, which are hereby made a part of this Section and relate to various submittals required to be submitted to Barton Malow Company for the Project.

B. Submit to Barton Malow Company: Shop Drawings, Certifications, Product Data, Samples, Tests, and all other submissions required by the Architect's technical specifications. Refer to each specification section for specific submittal requirements.

1.02 SUMMARY

A. This Section describes the following requirements including:
   1. Scope
   2. Submittal Register
   3. Submittal Requirements
   4. Submittal Process and Responsibilities
   5. Re-submission Requirements

1.03 SCOPE

A. Where requirements of this Section vary from the requirements of the General Conditions, this Section's requirements shall take precedence.

B. Barton Malow Company will prepare and submit a submittal register/schedule for Contractor's use in preparing submittals required for the Project. Contractors shall complete the submittal schedule/register showing the dates for submission, lead times required and their expected delivery dates. Submittals received on the date scheduled will be processed as specified. Contractor is responsible to provide all submittals required under the Contract Documents, whether or not listed in the submittal register. Barton Malow Company/Owner/Architect **will not** be held responsible for delays due to receiving submittals after the date indicated in the Contractor's submittal schedule.

C. Submittals shall be submitted based on each technical specification section. Submittals containing information about more than one specification section will be returned for re-submittal. When the specifications call out specific materials, products or devices with model numbers, which the Contractor intends to use for the work, the Contractor can submit the Material Compliance Submittal form (found at the end of Section 01330). This form is to be signed by an officer of the company and notarized by a Certified Notary Public in the State of Michigan within **fifteen (15)** days of award of the contract. List all specified materials, products, etc. (with specific model numbers, series, type, etc.) CERTIFYING THAT THE Contractor commits to using these products or materials as specified for their scope of work. **No Substitutions!** This certification letter will negate the need to provide individual submittals for these materials, products or devices. Contractor will provide information to allow proper coordination including electrical, mechanical connections and size, weight data.

D. *Compliance Certificate: Refer to the attached Compliance Certificates (immediately following this section) for submissions document to be used by the contractor to indicate the product/devices intended for use in the project without the need for a formal product data and/or material sample submittal. Items listed on these certificates are to be approved products indicated in and meeting all aspects of the specifications. Information provided on the form must provide all the necessary data to identify the exact products intended for use including all*

necessary selections for quality, color, thickness, size, finish and any other information required to clearly and completely identify each item in the specification section. With the submission and approval of this document ***NO FURTHER SUBMITTALS ARE REQUIRED*** *for the indicated specification section on the certificate except as follows:*

1. *Submittals for color selection or color verification are required along with the Compliance Certificate.*
2. *Mock ups of assemblies are required where specified.*
3. *Shop drawings showing layout or assemblies are required.*

DIVISION 4 – MASONRY
04810 UNIT MASONRY ASSEMBLIES

DIVISION 5 - METALS
05400 COLD-FORMED METAL FRAMING

DIVISION 6 - WOOD AND PLASTICS
06105 MISCELLANEOUS CARPENTRY

DIVISION 7 - THERMAL AND MOISTURE PROTECTION
07210 BUILDING INSULATION
07412 METAL WALL PANELS
07710 MANUFACTURED ROOF SPECIALTIES
07720 ROOF ACCESSORIES
07841 THROUGH-PENETRATION FIRESTOP SYSTEMS

07842 FIRE-RESISTIVE JOINT SYSTEMS
07920 JOINT SEALANTS

DIVISION 8 - DOORS AND WINDOWS
08111 STANDARD STEEL DOORS AND FRAMES
08211 FLUSH WOOD DOORS
08311 ACCESS DOORS AND FRAMES
08411 ALUMINUM-FRAMED ENTRANCES AND STOREFRONTS
08520 ALUMINUM WINDOWS

DIVISION 9 - FINISHES
09111 NON-LOAD-BEARING STEEL FRAMING
09250 GYPSUM BOARD
09511 ACOUSTICAL PANEL CEILINGS
09651 RESILIENT FLOOR TILE
09653 RESILIENT WALL BASE AND ACCESSORIES
09911 EXTERIOR PAINTING
09912 INTERIOR PAINTING

DIVISION 10 – SPECIALTIES
10101 VISUAL DISPLAY SURFACES
10155 TOILET COMPARTMENTS
10520 FIRE-PROTECTION SPECIALTIES
10801 TOILET AND BATH ACCESSORIES

DIVISION 16 - ELECTRICAL
16050 BASIC ELECTRICAL MATERIALS AND METHODS
16060 GROUNDING AND BONDING

16075 ELECTRICAL IDENTIFICATION
16120 CONDUCTORS AND CABLES
16130 RACEWAYS AND BOXES
16491 FUSES

E. No shop drawings, product data, or samples will be accepted by Barton Malow Company until Subordinate Parties have been approved.

F. Coordination: Each Contractor shall coordinate preparation and processing of submittals with performance of construction activities. Transmit each submittal sufficiently in advance of performance of related construction activities to avoid delay.

1. The Contractor, by providing the submittal assures the Owner, Architect and Barton Malow Company that the product or system submitted is available and deliverable in accordance with the schedule requirements.

2. Coordinate each submittal with fabrication, purchasing, testing, delivery, other submittals and related activities that require sequential activity.

3. Coordinate transmittal of different types of submittals for related elements of the Work so processing will not be delayed by the need to review submittals concurrently for coordination.

4. Barton Malow Company reserves the right to withhold action on a submittal requiring coordination with other submittals until related submittals are received.

5. Coordinate each submittal as required with all trades and with all public agencies involved.

6. Secure all necessary approvals from public agencies and others; signify by stamp or other means that all required approvals have been obtained.

G. Category Format Process: Submittals for this Project will be classified and managed using the following categories.

Category 1 - A submittal that establishes a level of quality by complying with the manufacturer and manufacturer's designated identifier as called for in the Contract Documents. Provide a "Letter of Compliance" committing to the use of specified components.

For record purposes, as part of the Letter of Compliance (or subsequently providing) a listing of those components will actually used or to be used. The Architect will only respond to the Letter of Compliance if something is wrong. This letter of compliance is contractually binding.

Category 2 - A submittal that represents a number of components assembled to represent a specific project need, or standard components that require modification to also meet a specific Project need. Individual submittals that completely represent their intent of the Contract Documents are required for this category. This type of submittal will be processed in a manner through the typical circle. A Contractor to Barton Malow Company or Architect to Barton Malow to Contractor.

Category 3 - A submittal that confirms compliance with governmental, industry or otherwise specified standard and/or requirements. Required is a Letter of Compliance committing the Contractor to obtain for record and/or otherwise be responsible for meeting the requirements of the contract documents. The Architect will only respond to the Letter of Compliance if something is wrong. This letter of compliance is contractually binding.

After the Award of Agreement, Barton Malow Company will provide the Contractor with a listing of submittal items.

Designation of Category 1 or 3 does not relieve the Contractor from providing the appropriate detailed documentation to Barton Malow Company and to other trades for the purpose of coordination of Work.

PART 2 - SUBMITTAL REGISTER

2.01 SUBMITTAL REGISTER/SCHEDULE

A. Barton Malow Company shall prepare and submit a listing of all items requiring submission, organized by specification section number, including the required close-out document submission recipients.

B. Submittal listings may include such items as:

1. Contractor's, or Subordinate Parties shop drawings.

2. Descriptive submittal types including, but not limited to:
   a. catalog cuts/product data
   b. diagrams
   c. operation charts or curves
   d. test reports
   e. samples
   f. operations and maintenance manuals, including parts list
   g. certifications
   h. warranties/guarantees
   i. other close-out documentation required

3. The Contractor's submittal register returned to Barton Malow Company shall include as a minimum:
   a. Submittal type and breakdown by specification section number of how the Contractor intends to submit the individual submittals for review (according to an intended sequence, area, etc.)
   b. Scheduled date for initial submittal of item
   c. Days required after return of approved submittal(s) to fabricate and deliver the specific item to the site (if applicable).

4. Barton Malow Company shall have the right to require the Contractor to add and/or delete items on the submittal register at any time.

5. Adequate time (approximately 3 weeks) shall be allowed for review and approval and possible re-submittal of any item subject to approval. No delay damages or time extensions will be allowed for time lost in late submittals or re-submittals.

6. The submittal register shall be coordinated with the schedule of values to insure delivery and payment requests are projected accurately. The Barton Malow Company will not be responsible for failure of the Contractor to properly schedule the process of material/product design, submittal, review, fabrication, delivery, storage and installation.

C. **The submittal register will become a part of the Agreement and the Contractor will be subject to requirements thereof.**

D. Each Contractor shall carefully coordinate preparation and processing of submittals to the performance of the Work so the Work will not be delayed by submittals. Coordinate and sequence different categories of submittals for the same Work and for interfacing units of Work, so that one will not be delayed by the coordination of the Architect's review with another. Drawings of component items forming a system or that are interrelated shall be correlated and submitted concurrently. Certifications to be submitted with the pertinent drawings shall be so scheduled.

E. Furnish approved copies of shop drawings, diagrams, templates, catalog cuts, technical data, etc. to other Contractors in other related Work designated by Barton Malow Company for the purposes of coordination of this Work.

F. If a Contractor does not submit the required submittal by the date marked on the submittal register, the Contractor will be subject to a $20/hr engineering fee back charge. This fee is established ONLY to ensure timely submission of submittals.

PART 3 - SUBMITTAL REQUIREMENTS

3.01 GENERAL

A. Each submittal shall show Contractor's review stamp, with handwritten signature, certifying review of the submittal, verification of field measurements and compliance with the Contract Documents.

B. Each submittal shall be accompanied with a Barton Malow Company Submittal Transmittal Form. A Submittal Transmittal Form will be provided to the Contractor See Section 001600 Forms. The following information shall be furnished by the Contractor on the submittal transmittal form:

1. Date
2. Project name and Architect's and the Barton Malow Company's project number
3. Names and Address of:
   a. Architect
   b. The Barton Malow Company
   c. Contractor
   d. Subcontractor (if applicable)
   e. Supplier
   f. Manufacturer
4. Identification of product or material
5. Technical Section number, clearly identified. On multiple submittals, a separate transmittal should be completed for each specification section on items being submitted.
6. Reference to construction drawings by drawing number
7. The quantity of each Shop Drawing, Product Data or Sample submitted
8. Notification of deviations from Contract Documents
9. Other pertinent data
10. LEED Requirements, including Post Consumer Recycling Content, Post-Industrial Recycled Content, Material Cost, and Distance from manufacturing point to jobsite, of Rapidly Renewable Content.

Submittals not so transmitted will be returned un-reviewed. Re-submissions shall be so noted on the transmittal.

C. Unless noted otherwise on the submittal, all submissions will be considered to be "as specified."

3.02 REQUIRED QUANTITIES OF SUBMITTALS

A. The following number of originals and copies will be required for each type of submittal:

Submittal Type	Submit
1. Manufacturer's, supplier's or Contractor's shop drawings	5 Sets
2. Manufacturer's catalog sheets, product data, brochures, diagrams, schedules,	5 Copies

performance charts, etc.

3. Samples	4 Samples (unless a specific number is required by specification)
4. Certifications	2 Copies
5. Warrantees/Guarantees	2 Copies
6. Test Reports	2 Copies
7. Operating and Maintenance Manuals/Data	2 Copies

B. Following review by the Architect, documents will be distributed as follows:

1. One copy to be retained by the Architect
2. One copy to be sent to Owner/Architect
3. One copy each of original and reviewed submittal to be retained by Barton Malow Company
4. Sepias and all remaining copies to be returned to Contractor

3.03 SUBMITTAL IDENTIFICATION

A. This paragraph is included to explain the method for submittals identification using Section 08710. Finish Hardware and the Finish Hardware Schedule as an example.

B. The Contractor shall assign submittal designations utilizing the following format and system.

C. The number for the first shop drawing submitted under that Section would be 08710-1A, the "1" designating that this is the first submittal under Section 08710; and the "A "signifying" that it is the first time a "finish hardware" schedule has been submitted to the Architect's office. If this "finish hardware" submittal is marked "rejected-resubmit", the re-submittal would retain the 08710-1 but "A" would be changed to 08710-1"B" to designate re-submittal; the next re-submittal 08710-1"C", etc. until this "finish hardware" item is approved.

D. The second "finish hardware" submittal (door alarms) sent to the Architect's office for the first time would be 08710-2A, etc.

PART 4 - TYPES OF SUBMITTALS

4.01 SHOP DRAWINGS

A. Submit Shop Drawings as single copies in the form of positive printing reproducible transparencies (commonly called sepia prints) suitable for reproduction use on dry print diazo type machines and the required number of blue lines. Sepia prints which cannot be reproduced will be returned to the Contractor for re-submittal.

B. Provide Shop Drawings as complete submittals (no partial sets) on original drawings or information prepared solely by the fabricator or supplier. In no instance shall the Contract Drawings be reproduced for Shop Drawing submittals.

C. Sheet sizes shall not exceed the size of the Contract Drawings or smaller than 8-1/2" X 11".

D. Each sepia print shall have blank spaces large enough to accept two (2) 3" x 6" review stamps of the Contractor, the Barton Malow Company, and the Architect.

E. Each sepia print shall carry the following information:

1. Project name, Architect's and Barton Malow Company's project number.
2. Date and Revision Dates.
3. Names of and Address' of:
   a. Contractor
   b. Supplier
   c. Manufacturer
4. Identification of product or material.
5. Relation to adjacent structure or materials.
6. Field dimensions, clearly stated as such.
7. Technical Section number.
8. Applicable standards such as ASTM or Federal Specification.
9. Identification of deviations from Contract Documents.
10. Reference to construction drawings by drawing number and/or detail number.

F. Submit sepia prints without folds either as flat sheets if size permits, or rolled in tubes.

4.02 PRODUCT DATA

A. Product Data such as catalog cuts, brochures or manufacturer's preprinted sheets may be submitted in lieu of sepia prints if adequately identified. Submit the required number of copies of product data to the Barton Malow Company.

B. Modify Product Data sheets to delete information that is not applicable to the Project. Provide additional information if necessary to supplement standard information.

C. Product Data Sheets that are submitted with extraneous information not deleted and/or modified will be returned without review to the Contractor for re-submittal.

4.03 SAMPLES

A. Provide physical Samples to illustrate materials, equipment or workmanship, and to establish standards by which completed work may be judged as required by the technical section.

B. Provide Office Samples in sufficient size and quantity to clearly illustrate full range of colors, textures, etc. available and the functional characteristics of the product or material.

C. Erect Field Samples or mock-ups as required by the technical sections and/or Barton Malow Company at the Project site in a designated location by Barton Malow Company. Construct field samples complete, including Work of all trades required in finishing the Work. Provide Field Samples at the request of the Architect and/or Barton Malow Company where construction materials and/or methods deviate from the requirements of the intent of the Contract Documents or conventional construction practice.

4.04 CERTIFICATIONS

A. Provide certifications as required by various technical sections on the Contractor's letterhead stationary. (See item D of Section 1.03 SCOPE.)

B. Certifications shall clearly identify the materials in reference and shall state that the material and the intended installation methods, where applicable, are in compliance with the Contract Documents for this project. Attach manufacturer's affidavits where applicable.

4.05 WARRANTEES/GUARANTEES

A. Provide warrantees and/or guarantees as required by the various technical sections and other Contract Documents on the Contractor's letterhead in accordance with the requirements in Section 01740.

4.06 OPERATING AND MAINTENANCE MANUALS

A. Provide operating and maintenance manuals/data as required by the various technical sections in accordance with the requirements in Section 01730.

PART 5 - SUBMITTAL PROCESS AND RESPONSIBILITIES

5.01 CONTRACTOR'S RESPONSIBILITIES

A. Before making submittals to Barton Malow Company, review each submittal, make changes or notations as necessary to conform to the Contract Documents, identify such review with review stamp and forward reviewed submittal with comments to Barton Malow Company for review. Return submittals not meeting contract requirements to Subordinate Parties and do not forward such submittals to Barton Malow Company.

B. Verify field measurements and product catalog numbers or similar data.

C. Notify the Barton Malow Company and Architect, in writing at time of submission, of deviations in submittals from the requirements of the Contract Documents.

D. After the Barton Malow Company's and Architect's review, within one (1) week of receipt distribute copies to other Contractors and supplier/fabricators with one copy to be maintained at the Project Site for reference use.

E. Do not begin Work which requires submittals until return of submittals with Barton Malow Company's and Architect's stamp and initials indicating review.

F. Contractor's responsibility for errors and omissions in submittals is not relieved by Barton Malow Company's or Architect's review of submittals.

G. Contractor's responsibility for deviations in submittals from requirements of Contract Documents is not relieved by Barton Malow Company's or Architect's review of submittals unless Barton Malow Company and Architect give written acceptance of specific deviations.

5.02 BARTON MALOW COMPANY'S RESPONSIBILITIES

A. Barton Malow Company will administratively review all submittals and coordinate them with information contained in related documents. Barton Malow Company's review is for general administrative purposes only and neither this review, nor any subsequent approval by Barton Malow Company of a submittal, shall relieve Contractor from its obligations to comply fully with the Contract Documents.

B. Barton Malow Company will return to the Contractor, without review, all submittals not bearing the Contractor's review stamp or not showing it has been reviewed by the Contractor.

C. Barton Malow Company will make changes or notations directly on the submittals, identify such review with its review stamp, sign and forward acceptable submittals to the Architect.

D. After the Architect's review, Barton Malow Company will forward submittals to the Contractor and retain one copy. Contractor shall distribute copies with one copy to be maintained at the Project Site for reference use and other copies distributed to suppliers/fabricators. Contractor shall supply copies of

reviewed submittals to Barton Malow Company in sufficient quantity to allow proper coordination of the Work.

5.03 ARCHITECT'S RESPONSIBILITIES

A. Architect will review submittals within ten (10) working days after receipt in the Architect's office. Submittals that must be reviewed by the Architect's consultants will be reviewed within fifteen (15) working days. The Architect or his consultant will be checking only for conformance with the design compliance of the Project and compliance with information given in the Contract Documents. Submissions that are large or of multiple submissions or required detailed or lengthy review by the Architect or his consultant may require additional time. Submissions for products or material that require a long lead time for delivery shall be noted as such and marked "Top Priority" so the architect may expedite the process.

B. Architect will return to Barton Malow Company without review any submittals not bearing the Contractor's or Barton Malow Company's review stamp or not showing that it has been reviewed by the Contractor and Barton Malow Company.

C. Architect will make changes or notations directly on the submittal, identify such review with its review stamp, obtain and record Architect file copy and return the submittal to Barton Malow Company.

D. Submittals shall be identified and submitted by individual technical specification sections only.

E. Kingscott Associates, Inc. will provide, for a fee, electronic data files compatible with AutoCAD 2000 for contractors' convenience and use in the preparation of shop drawings. Immediately following this section is the Request Form for electronic data. This request shall be directed to Barton Malow. Prior to the release of electronic files, the Architect will require a signed waiver of release and payment of the fee.

Approximate Fee Schedule: Fee varies depending on size, type of work, and discipline. Please contact Penny Mitchell at Kingscott (269-381-9440).

5.04 RE-SUBMISSION REQUIREMENTS

A. For Shop Drawings:

1. Review initial drawings as required and submit as specified for initial submittal.

2. Indicate on drawings all changes which have been made other than those requested by Barton Malow Company or Architect.

B. For Product Data and Samples:

1. Resubmit new data and samples as required for initial submission.

END OF SECTION 01330

Barton Malow Company

CONTRACTOR'S GUARANTEE

STATE OF Michigan)
) SS
County of Oakland)

Project: Phase I - Three Middle Schools Remodeling & Addition
Project No.: 041049 - BP#9361
Owner: Troy School District

TO ALL WHOM IT MAY CONCERN:

_____ of the City of _____ County of _____ and State of _____ being duly sworn, deposes and says that s/he is _____ of _____ (the "Contractor") and, being duly authorized, makes this statement and guarantee on its behalf; that the Contractor, in completing the performance of a certain (check one) ☐Subcontract Order # _____ with Barton Malow Company or ☐ Contract with Owner (the "Contract") for the Project, warrants that all of its Work under the Contract is of good quality and new, unless otherwise required or permitted by the Contract, and that the Work is free of defects and that the Work complies with the requirements of the Contract, including all documents incorporated into the Contract by reference. If within two (2) year[s] after the date of Substantial Completion of the Project or designated portion of the Project, any of Contractor's Work is found to be defective or not otherwise in accordance with the requirements of the Contract, Contractor shall correct the Work at its sole expense promptly after receipt of written notice from the Owner or Barton Malow Company, including any other Work affected in correcting such defective or nonconforming Work (the "Correction Period"). The Correction Period shall be extended with respect to portions of the Work first performed after Substantial Completion by the period of time between Substantial Completion and the actual performance of Contractor's Work, and for an additional Correction Period following any correction. This obligation shall survive acceptance of the Work and termination of the Contract.

This Guarantee shall be in addition to the terms of any other warranty or longer period of obligation specified in the Contract, including all documents incorporated therein, or the terms of any general warranty, and is not in lieu of any of them. This Guarantee shall not be construed to establish a period of limitation with respect to other obligations, which the Contractor might have under the Contract and has no relationship to the time within which the obligation to comply with the Contract may be sought to be enforced or to the time, which any proceeding may be commenced.

Trade or Work	Guarantee Period Commencement Date

_____
Subcontractor

By: _____
Title

Subscribed and sworn to before me this

_____ day of _____ A.D. 20__

_____
Notary Public

in and for _____ County _____

My commission expires: _____

Middle School Remodel Addition (Boulan, Larson and Smith)

Pre-Bid RFI Log

RFI No.	IN DATE	QUESTION	RESPONSE	REPLY DATE	DISTRIBUTION	UPDATED DWG.'s *
1	28-Nov-06	1. Room 120 ceiling note not legible, please verify. 2. Corridor 132 reflected shows to remain, demo shows remove.	1. Room 120 clg. Note is #3. 2. A2.1 corr. 132 - Add note #3.	12/5/2006	Elkhorn Construction Co.	A2.1
2	28-Nov-06	1. Corridor 344 - No ceiling note, please advise. 2. Room 351 - No ceiling note, please advise. 3. Room 343 - No ceiling note, please advise. 4. Room 331 - No ceiling note, please advise. 5. Room 339 - No ceiling note, please advise. 6. Corridor 343 - No ceiling note, please advise.	1. Corr. 344 - Add note #3. 2. Science 351 - Note #9 is in dif @ OSD. 3. Corr 343 - Add note #7. 4. Conf. 331 - Add note #9. 5. Conf. 339 - Add note #9, 2X4 @ 8'-6". 6. Corr. 343 - Add note #7. 7. Note #343 is listed as room & corridor, is there 2-343's?	12/5/2006	Elkhorn Construction Co.	A2.3, A2.3A
3	28-Nov-06	1. Room 242 - No ceiling note. Demo shows tile removed, grid to stay. Please advise. 2. Corridor 289 - No ceiling note.	1. Women's 242 - Add note #9. 2. Corr 289 - Add note #7. On D1.2 change demo note #4 to #3, remove tile ONLY.	12/5/2006	Elkhorn Construction Co.	A2.2
4	28-Nov-06	1. Corridor 341 - No demo note, please advise. 2. Corridor 342 - Advise extent of demo.	1 & 2. See D1.2.	12/5/2006	Elkhorn Construction Co.	D1.3
5	28-Nov-06	1. Page A2.5 Partition types (not in print, missing). 2. General notes #8 - For partition types refer to A2.4, please advise.	1. Page A2.5 is missing & will be in the addendum. 2. Partition details are on A2.5.	12/5/2006	Elkhorn Construction Co.	T1, A2.5
6	29-Nov-06	A0.0 code compliance plan not in print. Please advise.	It is in my set.	12/7/2006	Elkhorn Construction Co.	None
7	28-Nov-06	Corridor 345 - No ceiling note. Please advise	Corridor 345 - Add note #7.	12/5/2006	Elkhorn Construction Co.	A2.3
8	29-Nov-06	We respectively request that Marsh Industries be added to the list of acceptable manufacturers for Specification Section 10101 Visual Display Surfaces. Marsh Industries has been a Manufacturer of these products for over 75 years and is a leader in this field. We also will be supplying these same products to Baker Middle School which were approved for that project. Thank you for your consideration in this matter.	This is not a RFI. We need a substitution request form.	12/5/2006	Architectural Elements	None
9	27-Nov-06	Substitution Request - 07412 - Metal Wall Panels	NOT ACCEPTED	12/5/2006	Metal Design Systems	None
10	24-Nov-06	1. Item 21 and item 26 contradict each other. Please advise. 2. What is meant by item #7? 3. Are we to plan on two temp walls at each school? 4. Is every existing area on code compliance plan intended to be fire sprayed? 5. There is no page A2.5 in drawings for Smith.	1. We'll correct. If spray insulation is required behind metal panel and/or substrate, the 6.1 category is installing, the insulation is by 6.1. 2. If existing framing (wall) is not sufficient to install new door/window, 6.1 must rectify. Necessary to look @ existing construction. 3. Smith only. 4. Carpenter's 6.1 bid allowance will be increased so existing walls can be sprayed to meeting rating if needed. New walls (rating) will be in 6.1 bid or 4.1 bid depending on type of wall.	11/29/2006	ARJAC, INC.	None

RFI No.	IN DATE	QUESTION	RESPONSE	REPLY DATE	DISTRIBUTION	UPDATED DWG.'s *
11	28-Nov-06	I am looking at the architectural drawings for Smith MS and they consistently note section 07145 which I do not have a spec for. I assume that it is 07412 but I would like clarification from you.	Technical specifications include 07412 - Metal Wall Panels - this is the intent	12/7/2006	Curtis Glass Company	None
12	4-Dec-06	No specification is given for insulation of Chilled Water piping. Please clarify what insulation application is required for the Chilled Water.	Please see Addendum #1.	12/5/2006	Dependent Insulation Co. Inc.	None
13	4-Dec-06	The specification requires exposed ductwork to be insulated with 2 lb/cu.ft. mineral fiber board insulation. Mineral fiber board is only available in 3 lb/cu.ft. And 8 lb/cu.fu. Applications. Please clarify the correct application for exposed ductwork.	Provide specified insulation. CertainTeed, Johns Manville & Knawe. All provide mineral fiber board insulation with 2.25 lb/cu.ft.	12/5/2006	Dependent Insulation Co. Inc.	None
14	4-Dec-06	Note 2 on drawings M3.1, 3.2, and 3.3 states "Provide duct lining downstream of sound attenuator or heating coil." Does this note refer to the entire page or just the ducts indicated with the note?	Just the ducts indicated with the noted.	12/5/2006	Dependent Insulation Co. Inc.	M3.1, M3.2, M3.3
15	1-Dec-06	1. For Boulan Park, its hard to tell where the school would like the proposed curbs. In addition, since there's concrete curbs and asphalt curbs it's also difficult to tell them apart. Please clarify. 2. The run of pipe from CB#3 to CB#2 is indicated on the drawings as being 90 LF, but that is incorrect. The quantity should be +/- 115 LF.	1. There is approx. 31 LFT now concrete curb South of new North curb ramp, +/- 14 LFT curb replacement due to poor condition, +/- 10 LFT curb replacement for smooth transition to new. This conc. Curbing should match existing - straight curb w/o cutter (verify in field). New walk E has integral curb. B indicates new asphalt curb to match existing. 2. Pipe run from CB3 to CB2 S/B +/- 115 LFT.	12/5/2006	ABC Paving	C1.1, C1.2
16	1-Dec-06	I have a color layout plan for Unit 200 for the Smith school but am missing units 100, 300, and 400. I found room 2087 has ceramic tile and a wall detail there all other info is missing. Also when is the bid due?	See floor plans for color & finish info in other areas. Bids are due @ 3pm on 12/19/2006.	12/7/2006	Atlantic Stoneworks, INC.	None
17	1-Dec-06	1. Room 218 denotes 2X4 ceiling but is called out as 2X2 @ 8'-6" in two areas. 2. Room 216 is tagged 9'-0" existing 2X4, and (note #3) 9'-0" which shows new 2X4 ceiling.	1. Room 218 is 2X4 @ 8'-6". 2. Room #216 is new 9'-0" 2X4.	12/5/2006	Pontiac Ceiling & Partition	A2.2
18	4-Dec-06	1. Who is responsible to open ceilings for work in classrooms 101 thru 105? 2. What about grid work, these rooms are not scheduled for new ceilings?	1. Regarding this topic, scopes will remain as originally written. Mechanical removes ALL ceiling tile. 2. Refer to three (3) pages following project manual section 00210. More specifically - Architectural demo note #24.	12/6/2006	Heights Heating & Cooling	M1.1, A2.1

Middle School Remodel Addition (Boulan, Larson and Smith)

Pre-Bid RFI Log

RFI No.	IN DATE	QUESTION	RESPONSE	REPLY DATE	DISTRIBUTION	UPDATED DWG.'s *
19	4-Dec-06	1. Smith MS - General - noted air compressor and dryer is being demo...is control contractor or mechanical responsible for its removal? 2. Is there any existing pneumatic control valves on existing equip that will have to be changed.....and who is responsible? ... and is there a list of sizes and total number of units?	There are...will be issued as a CCD after award of contract.	12/7/2006	Heights Heating & Cooling	None
20	1-Dec-06	1. Clarification on scope of work 00220-2 #14 reads that we are to supply mechanical and electrical fixtures & devices?? 2. 00220-3 #21 & #26 are contradictory. 21 says mason is responsible for spray foam insulation at masonry walls, and 26 says carpentry is responsible.	1. No - mechanical & electrical will provide fixtures. 6.1 needs to coordinate layout in casework. Will clarify in Add #1. 2. See addendum - sorry for confusion, scopes reissued with clarifications.	12/5/2006	Pontiac Ceiling & Partition	None
21	1-Dec-06	1. Please clarify the locations for gymnasium divider curtains per Section 11480 - Gymnasium Equipment. I have not been able to locate gymnasium divider curtains for any of the schools. Smith Elementary School electrical drawings show a gym curtain motor; however, the architectural drawings do not show any new equipment. 2. If curtains are required at all of the schools, who is responsible for demo of existing equipment, folding doors and/or curtains?	1. See Smith Middle School floor plan A1.4. Look in the Gym 408 for the thing dividing Gym & noted as "Elec. Operated Fold-Up Gym Divider...". 2. Contractor installing new.	12/6/2006	CM Associates	None
22	4-Dec-06	1. I'm bidding the EW bid division for the above referenced project. I have a question regarding the scope of work, item No. 20 states to include a 50,000SF area, but doesn't state the depth. Please clarify the depth. 2. Permits are not addressed under the scope of work. Will the Owner be obtaining/paying for permits? 3. Also, the scope of work states that permanent fencing is by this contractor, but none is shown on the drawings. Please clarify. 4. Item no. 2 states to provide 2 16' wide temporary construction roads @ smith MS but doesn't state how long you want them to be. Please clarify.	1. 6" depth. 2. Include $3,000 allowance for permits. 3. No fence if not shown. 4. See addendum, lineal foot is clarified w/ sketch of temp. road.	12/6/2006	ABC Paving	None
23	4-Dec-06	Fixtures 12, 13, 14, & 15 according to scale the lower panels are 6-1/2" X7-1/2". The panels which are specd do not come in more than 5 widths.	Provide butt joint trim as required.	12/5/2006	Union Construction Services	A3.1

Middle School Remodel Addition (Boulan, Larson and Smith)

Pre-Bid RFI Log

RFI No.	IN DATE	QUESTION	RESPONSE	REPLY DATE	DISTRIBUTION	UPDATED DWG.'s *
24	4-Dec-06	Boulan Park - Dwg. ME1.1 has a schedule for air compressor, dryer and 3 new pumps. No locations or information on demo, mech, or electrical drawings.	See drawings M4.1 & M4.2.	12/5/2006	Heights Heating & Cooling	None
25	4-Dec-06	Boulan Park - Drawing M3.2A refers to 7/M4.2 do not have a drawing M4.2 for Boulan Park.	M4.1 & M4.2 may be missing. They will be issued with Addendum #1.	12/5/2006	Heights Heating & Cooling	None
26	4-Dec-06	Boulan Park - Drawing M2.1 and M2.1A - Drawing M2.1 shows a 2" tap off the 4" CHWS/R...does not show where it goes up into unit 200. Drawing M2.1A shows a 3" tap off the 4" CHWS/R main. There also shows a valve and CS after each tap, are they in the proper location and/or are they required on main?	All of the branch piping shown on the drawings M2.1 and M2.1A are existing to remain taps off the HS & HR mains. There are no taps off the CHS & CHR mains.	12/5/2006	Heights Heating & Cooling	M2.1, M2.1A
27	4-Dec-06	Boulan Park & Larson - drawing ME1.1 shows a detail for the hot water reheat coil. Note E#1 states that I am to repipe/reconnect existing piping and controls and to provide ball valves and fittings as necessary. What is to be followed, if the existing system is not piped per detail?	The detail provides the minimum requirements for all reheat coil reconnections.	12/5/2006	Heights Heating & Cooling	ME1.1
28	4-Dec-06	Boulan Park & Larson - is there any glycol in the chilled water system, if so what percentage?	No - 0%.	12/5/2006	Heights Heating & Cooling	None
29	4-Dec-06	Substitution Requests 1. 08710 - Hinges 2. 08710 - Door closers 3. 08710 - Exit Devices 4. 08710 - Cylindrical Locksets 5. 08710 - Cylinders & Keying 6. 08710 - Mortise Locksets 7. 08710 - Continuous Geared Hinges	1. Accepted 2. NOT Accepted 3. Accepted 4. NOT Accepted 5. NOT Accepted 6. NOT Accepted 7. Accepted	12/4/2006	Rittner French Associates	None
30	29-Nov-06	Substitution Request - 08111 - Hollow Metal Doors & Frames	NOT Accepted	12/5/2006	Hardware Agents LLC.	None
31	29-Nov-06	Substitution Request - 08710 - Hinges	Accepted	12/5/2006	Hardware Agents LLC.	None
32	29-Nov-06	Substitution Request - 10155 - Toilet Compartments	NOT Accepted	12/5/2006	Hardware Agents LLC.	None
33	29-Nov-06	Substitution Request - 10801 - Toilet & Bath Accessories	Accepted	12/5/2006	Hardware Agents LLC.	None
34	5-Dec-06	Please verify fire rating for the following doors and frames: 204, 205, 206, 207, 207, & 209. Schedule calls for FRS but there is no indication of frame note.	200, 201, 202, & 204-209 are non-fire rated. Glass can be 1/4" temp.	12/5/2006	Union Construction Services	A6.1
35	5-Dec-06	Please verify if any of the aggregate panels need to be abated for asbestos. Notes 15, 16, 17, & 18.	Possible, check with CM. See attached email correspondence.	12/5/2006	Union Construction Services	None

RFI No.	IN DATE	QUESTION	RESPONSE	REPLY DATE	DISTRIBUTION	UPDATED DWG.'s *
36	5-Dec-06	Substitution Request - 12355 - Institutional Casework	Approved, subject to full compliance with specifications & drawings.	12/5/2006	Farnell Equipment Company	None
37	24-Nov-06	Boulan Park - We picked up drawings on Wednesday 11/22 for the above project. Be advised that sheets M4.1 & M4.2 are missing from our bid set. I will call Monday to follow up.	Will be included in addendum.	12/6/2006	Great Lakes Mechanical	None
38	6-Dec-06	1. Door 407 at Smith appears on the door schedule but not in the hardware schedule. Is new hardware required? If so, which hardware set? 2. Doors 200, 201, 202, 204, 205, 206, 207, 208, and 209 are scheduled to receive fire rated glazing but the doors and/or frames are not listed as labeled openings in the door schedule. Are they fire rated openings? If so, what are the ratings?	1. Will be clarified in addendum. Provide storage room doors with hardware consistent with hardware specs. 2. See RFI #34.	12/6/2006	ARJAC, INC.	None
39	1-Dec-06	Substitution Request - 15671 - Condensing Units	Pending review and Owner approval. Please clarify bid.	12/7/2006	Thermalnetics, Inc.	None
40	1-Dec-06	Substitution Request - 15785 - Air/Air Energy Recovery	Pending review and Owner approval. Please clarify bid.	12/7/2006	Thermalnetics, Inc.	None
41	1-Dec-06	Substitution Request - 15785 - Air/Air Energy Recovery Equipment	Pending review and Owner approval. Please clarify bid.	12/7/2006	Thermalnetics, Inc.	None
42	1-Dec-06	Substitution Request - 15145 - Domestic Water Piping	Pending review and Owner approval. Please clarify bid.	12/7/2006	Thermalnetics, Inc.	None
43	1-Dec-06	Substitution Request - 15181 - Hydronic Piping	Pending review and Owner approval. Please clarify bid.	12/7/2006	Thermalnetics, Inc.	None
44	6-Dec-06	The architect has selected standard black for the SCRS bathroom partitions for the three middle schools. The manufacturer does not have black in these partitions. Please advise.	We will select from mfr. Standard colors.	12/7/2006	ARJAC, INC.	None
45	6-Dec-06	There are no measurements in the bathrooms we can use to estimate the cost of the bathroom partitions. Please advise.	Exist. Conditions. You can check them. At this point, there is no option.	12/7/2006	ARJAC, INC.	None
46	6-Dec-06	There are no specifications regarding diffuser panels for the band room or choir room in Larson or Boulan Park. Please advise.	09511 - See Acoustical Ceiling Spec.	12/7/2006	ARJAC, INC.	None

RECEIVED
NOV 30 2006
BY:

RECEIVED
NOV 28 2006
BY:

26043-12 CA PB RFI-001

ELKHORN CONSTRUCTION CO., INC.

6072 N. Birch Hill Drive
Smiths Creek, MI 48074
(810) 367-7460
FAX (810) 367-7462

Request for Information BMC-01

Date: 1/06
To: Barton Malow
Leal Bessent, Project Manager

RFI#:
Project: Troy - Boulan Park

Bid Package #: #9361
Bid Category #: 6.1
CM Project #

VIA:

From: Tom Clingenpeel

Return to:

Reference Specs:

Reference Drawings: A2.1

Request:

Room 120 ceiling Note not Legable, please Verify

Corridor 132 Reflected shows to Remain, Demo Shows Remove

Elkhorn Const Co inc. — Company Name
Tom Clingenpeel — Submitted By
1/06 — Date

Reply:

Attachments:

ROOM 120 GLG. NOTE IS #3

NO. CORR. 132 - ADD NOTE #3

This information is interpreted to be within the scope of referenced contract issued in accordance with the Contract Documents and without change in Contract Sum or Contract time, and, as such, is not an authorization for work beyond the scope of the contract.

KING SCOTT — Company Name
Reply By
11/30/06 — Date

RECEIVED NOV 30 2006 BY: NOV 28 2006

2643-12 CA ABRFI-002

ELKHORN CONSTRUCTION CO., INC.

6072 N. Birch Hill Drive
Smiths Creek, MI 48074
(810) 367-7460
FAX (810) 367-7462

Request for Information BMC 02

Date: 1/06
To: Barton Malow
Leah Bossert, Project Manager

RFI#:
Project: Troy. Boulan Park

Bid Package #: #9361
Bid Category #: 6.1
CM Project #

VIA:

From: Tom Clingenpeel

Return to:

Reference Specs:
Request:

Reference Drawings: A2.3 / A2.3A

Corridor 344	No ceiling Note	please advise	
Room 351	No ceiling Note	please advise	
Room 343	No ceiling Note	"	
Room 331	No ceiling Note		
Room 339	No ceiling Note	"	
Corridor 343	No ceiling Note		

Elkhorn Const Co inc. — Company Name
Tom Clingenpeel — Submitted By
1/06 — Date

Reply:

Attachments:

CORR. 344 - ADD NOTE #3
SCIENCE 351 - NOTE #9 IS IN DIF. @ OSD
CORR. 343 - ADD NOTE #7
CONF. 331 - ADD NOTE #9
CONF. 339 - " " " , 2x4 @ 8'-6"
CORR. 343 - ADD NOTE #7
NOTE #343 IS LISTED AS ROOM & CORRIDOR, IS THERE 2-343'S ?

This information is interpreted to be within the scope of referenced contract issued in accordance with the Contract Documents and without change in Contract Sum or Contract time, and, as such, is not an authorization for work beyond the scope of the contract.

KINGSCOTT — Company Name
[signature] — Reply By
11/30/06 — Date

RECEIVED
NOV 30 2006

2043-12 CP RFI-003

RECEIVED
NOV 28 2006 BY

ELKHORN CONSTRUCTION CO., INC.

6072 N. Birch Hill Drive
Smiths Creek, MI 48074
(810) 367-7460
FAX (810) 367-7462

Request for Information

Date: 1/06
To: Barton Malow
Leah Bassett Project Manager
Fax 1-248-823-4672
VIA:
From: Tom Clingenpeel

RFI#: 003
Project: Troy - Boulan Park
Bid Package #: #9361
Bid Category #: 6.1
CM Project #
Return to:

Reference Specs:
Reference Drawings: A2.2

Request:

Room 242 No ceiling Note Demo shows Tile Removed Said to stay. Please advise

Corridor 289 No Ceiling Note,

Elkhorn Const Co inc. — Company Name
Tom Clingenpeel — Submitted By
1/06 — Date

Reply:

Attachments:

WOMEN'S 242 - DO NOTE #9

CORR. 289 - DO NOTE #7 ON D1.2 Change Memo NOTE #4 TO #3, Remove Tile only.

This information is interpreted to be within the scope of referenced contract issued in accordance with the Contract Documents and without change in Contract Sum or Contract time, and, as such, is not an authorization for work beyond the scope of the contract.

KINGSCOTT — Company Name
Reply By
11/30/06 — Date

RECEIVED
NOV 30 2006

2043-12 CA YBS RFI-004

ELKHORN CONSTRUCTION CO., INC.

6072 N. Birch Hill Drive
Smiths Creek, MI 48074
(810) 367-7460
FAX (810) 367-7462

Request for Information

BMC 04

Date: 1/06
To: Barron Malow
Leah Bassett
1-248-823-4672

RECEIVED
NOV 28 2006
BY:

RFI#:
Project: Troy - Boulan Park
Bid Package #: #9361
Bid Category #: 6.1
CM Project #:

VIA:

From: Tom Clingenpeel

Return to:

Reference Specs:
Reference Drawings: D1.3

Request:

Corridor 341 No Demo Note Please
Corridor 342 advise Extent of Demo

Elkhorn Const Co inc. — Company Name
Tom Clingenpeel — Submitted By
1/06 — Date

Reply: See D1.2

Attachments:

This information is interpreted to be within the scope of referenced contract issued in accordance with the Contract Documents and without change in Contract Sum or Contract time, and, as such, is not an authorization for work beyond the scope of the contract.

KINGSCOTT — Company Name
Reply By
11/30/06 — Date

RECEIVED NOV 28 2006

RECEIVED NOV 30 2006 BY

BMC-05

7043-12 CA PB RFI-005

ELKHORN CONSTRUCTION CO., INC.

6072 N. Birch Hill Drive
Smiths Creek, MI 48074
(810) 367-7460
FAX (810) 367-7462

Request for Information

Date: 1/06
To: Barron Malow
Leah Bassert
1-248-823-4672

RFI#:
Project: Troy - Smith Middle School

Bid Package #: #9361
Bid Category #: 6.1
CM Project #

VIA:

From: Tom Clingenpeel

Return to:

Reference Specs:
Reference Drawings: Cover Page
Request:

Page A2.5 Partition Types (Not in Print) - missing
General Notes #8 For Partition Types Refer A2.4
Please Advise
Thank-You

Elkhorn Const Co inc. — Company Name
Tom Clingenpeel — Submitted By
11/28/06 — Date

Reply:
Attachments:

PAGE A2.5 IS MISSING & WILL BE IN THE ADDENDUM. PARTITION DETAILS ARE ON A2.5

This information is interpreted to be within the scope of referenced contract issued in accordance with the Contract Documents and without change in Contract Sum or Contract time, and, as such, is not an authorization for work beyond the scope of the contract.

KINGSCOTT — Company Name
[signature] — Reply By
11/30/06 — Date

RECEIVED NOV 30 2006 BY:

RECEIVED NOV 29 2006 BY:

2043-12 CA RFI-006

ELKHORN CONSTRUCTION CO., INC.

6072 N. Birch Hill Drive
Smiths Creek, MI 48074
(810) 367-7460
FAX (810) 367-7462

Request for Information

BMC 06

Date: 11/29/06
To: Pearson Malow
Leah Bassett
1-248-823-4172

RFI#:
Project: Troy - Smith Middle School

Bid Package #: #9361
Bid Category #: 6.1
CM Project #

VIA:

From: Tom Clingenpeel

Return to:

Reference Specs:
Reference Drawings: T1

Request:

A0.0 code compliance Plan not in Point

Please Advise

Elkhorn Const Co inc. — Company Name
Tom Clingenpeel — Submitted By
11/29/06 — Date

Reply:

Attachments:

IT IS IN MY SET.

[redacted]

This information is interpreted to be within the scope of referenced contract issued in accordance with the Contract Documents and without change in Contract Sum or Contract time, and, as such, is not an authorization for work beyond the scope of the contract.

Kingscott — Company Name
Todd A. Allen — Reply By
11/30/06 — Date

NOV 30 2006

RECEIVED NOV 28 2006

2043-12 CA PAS RFI-007

ELKHORN CONSTRUCTION CO., INC.

6072 N. Birch Hill Drive
Smiths Creek, MI 48074
(810) 367-7460
FAX (810) 367-7462

Request for Information

BMC 09

Date: 1/06
To: Barton Malow
Leah Bassett
1-248-823 4672

RFI#:
Project: Troy. Larson

Bid Package #: #9361
Bid Category #: 6-1
CM Project #

VIA:

From: Tom Clingenpeel

Return to:

Reference Specs:
Reference Drawings: A2.3
Request:

Corridor 345 No ceiling Note Please advise

Elkhorn Const Co inc. — Company Name
Tom Clingenpeel — Submitted By
1/06 — Date

Reply:
Attachments:

CORRIDOR 345 - ADD NOTE #7

This information is interpreted to be within the scope of referenced contract issued in accordance with the Contract Documents and without change in Contract Sum or Contract time, and, as such, is not an authorization for work beyond the scope of the contract.

KINGSCOTT — Company Name
[signature] — Reply By
11/30/06 — Date

RECEIVED
NOV 30 2006
BY:
BMC RFI
RECEIVED
NOV 29 2006
BY:

2043-12 CA #83 RFI-001

architectural ELEMENTS

To:		From:	Richard J. McKnight
Company:	Barton Malow	Pages:	1 Including Cover
Fax:	248-823-4672	Date:	November 29, 2006
Re:	Three Middle Schools for Troy School District, Boulan Park, Larson and Smith	E-Mail	rmcknight@wadsworthinc.com

We respectively request that Marsh Industries be added to the list of acceptable manufacturers for Specification Section 10101 Visual Display Surfaces.

Marsh Industries has been a Manufacturer of these products for over 75 years and is a leader in this field.

We also will be supplying these same products to Baker Middle School which were approved for that project.

Thank you for your consideration in this matter.

Dick McKnight

THIS IS NOT A RFI. WE NEED A SUBSTITUTION REQ. FORM.

KINGSCOTT ~~TEM~~ 11/30/06

A DIVISION OF WADSWORTH & ASSOCIATES, INC
1500 MICHAEL OWENS WAY, PERRYSBURG, OHIO 43551 (419) 861-8181 FAX (419) 861-8282

D. 1 of 1

BMC RFI 9

RECEIVED NOV 27 2006 BY:

Metal Design Systems

TREVOR W. WAGESTER
MANUFACTURER'S REPRESENTATIVE
645 W. Eddy Road
Sandusky, MI 48471
Ph.: 810 648-5837 • Fax: 810 648-4943
Cell: 810 837-1055

To:	Barton Malow	**From:**	Trevor Wagester
Attn.:	Kelly	**Date:**	11/27/2006
Fax:	248 823-4672	**Re:**	Troy School – 3 middle schools
Total Number of Pages:	16 (including cover)		

☐ Urgent ☐ For Review ☐ Please Comment ☐ Please Reply ☐ Please Recycle

• **Comments:**

Request for Approval- 07412 – Metal Wall Panels.

1. SOME DETAILS REQ. SNAP FIT TRIM, NO SNAP FIT DETAILS INCLUDED
2. METAL FACE IS SPEC'D @ .032, PRODUCTS .020.
3. NEED COLOR SAMPLES FOR VERIFICATION OF AN ACCEPTABLE MATCH, NO COLOR SAMPLES PROVIDED.
4. 20 YR. COLOR FINIS REQ., KYNAR 500, WHAT IS CONAFLON? SHOW COMPARISON TO KYNAR & PROVIDE INFO SHOWING 20 YR. FINISH.

Barton Malow Company

Troy School District

RECEIVED NOV 27 2006

SUBSTITUTION REQUEST FORM

TO: BARTON MALOW COMPANY/KINGSCOTT ASSOCIATES
1361 Boyd
Troy, MI 48083
PH – 248-823-4631 FAX- 248-823-4672

We hereby submit for your consideration the following product instead of the specified item for the above Project:

DRAWING NO.: DRAWING NAME:

SPEC. SECT.	SPEC. NAME	PARAGRAPH	SPECIFIED ITEM
7412	Metal Wall Panels	2.7	Composite Wall Panels

Proposed Substitution:

Attached complete information on changes to Drawings and/or Specifications which proposed substitution will require for its proper installation.

Submit with request all necessary samples and substantiating data to prove equal quality and performance to that which is specified. Clearly mark manufacturer's literature to indicate equality in performance.

CERTIFICATION OF EQUAL PERFORMANCE AND ASSUMPTION OF LIABILITY FOR EQUAL PERFORMANCE

The undersigned states that the function, appearance and quality are equivalent or superior to the specified item.

Submitted by:

Architectural System — Owner

Signature — Title

Firm

635 W. Eddy — Sandusky, MI 48471

Address

11-27-06

Telephone 810 648-5837 — Date

Signature shall be by person having authority to legally bind his/her firm to the above terms. Failure to provide legally binding signature will result in retraction of approval.

Barton Malow Company | Troy School District

For use by Architect:	For Use by Owner:
___ Accepted ___ Accepted as Noted	___ Accepted ___ Accepted as Noted
X Not Accepted ___ Received Too Late	___ Not Accepted ___ Received Too Late
___ Insufficient Data Received	___ Insufficient Data Received
By: [signature]	By:
Date: 11/30/06	Date:

Fill in Blanks Below: (Attach additional sheets as required)

A. Does the Substitution affect dimensions shown on Drawings?
Yes ___ (No) ___. If yes, clearly indicate changes: _____

B. Will the undersigned pay for changes to the building design, including engineering and detailing costs caused by the requested substitution?
Yes ___ (No) ___ If no, fully explain: NO changes required

C. What affect does substitution have on other contracts or other trades?
NO Negative Affect

D. What affect does substitution have on the delivery and construction schedule? NO Negative Affect

E. Manufacturer's warranties of the proposed and specified items are: (X) Same ___ Different
If Different, explain on an Attachment

F. Reason for Request: Competitive Bidding

G. Itemized comparison of specified item(s) with the proposed substitution; list significant variations:
See Attached

H. Accurate cost data comparing proposed substitution with product specified:
N/A

I. This substitution will amount to a credit or an extra cost to the Owner of: N/A dollars
($ ___)

END OF SECTION 01630

(9/06 Edition)

SPECIFICATIONS FOR

Metal Design Systems
Featuring
Aluminum Composite Panels

Section 07430 Aluminum composite Panels

(Based upon Metal Design Systems Series 30 with PE Core Alpolic - contact MDS for other MDS system specifications)

1.00 **GENERAL REQUIREMENTS**

1.01 SCOPE OF WORK:

A. Provide a water shedding Rout and Return extrusion set panel system, as detailed on the drawings. The Rout and Return panel system must consist of an ALPOLIC panel with extruded channel / retention bar which attach directly to an integrated framing system, which allows panels to float on top to the sub-framing.

B. The panel system as detailed, shall consist of extruded perimeter extrusions, extruded retention bar as required and related flashings,

1.02 QUALITY ASSURANCE:

A. General: The details show the preferred profiles and performance requirements. Provide a glazed and structurally sound, water tight wall panel system with minimal water penetration.

B. Substitutions: Any proposed system shall be compatible with adjacent materials and components such that the assembly as a whole will function satisfactorily, and shall include extruded aluminum perimeter clips to provide the designed architectural reveal. Modifications to structure or other components required by the proposed substitution shall be clearly delineated in the submittal and all resulting costs shall be included as part of the bid.

C. Fabrication History: Fabricator shall assume undivided responsibility for all components of the panel work and shall provide engineered support as required to demonstrate the ability to perform said work.

D. Performance Requirements: Work of the Section shall conform to all applicable codes and regulations.

1. Design Criteria
   a). Make allowances for free and noiseless vertical and horizontal thermal movement due to the contraction and expansion of component parts, for an ambient temperature range of from plus 20 degrees F to plus 180 degrees F. Buckling, opening of joints, undue stress on fasteners, failure of sealants or any other detrimental effects due to thermal movement of component parts will not be permitted. Fabrication, assembly and erection procedure shall take into account the ambient temperature range at the time of the respective operation.

2. Wind Loads
   a). Assemblies herein specified shall be designed for flexural, shear and torsional stresses for the following positive and negative wind pressures acting normal to the plane of the assemblies. Loading design shall; be based on latest Uniform Building Code.

3. Pressure and Load
   a). Normal to the plane of the all between structural supports, deflection of the connected perimeter-framing members shall not exceed 1/75 of span length or 3/4", whichever is less.

   b). At connection points of framing members to anchors, anchor deflection in any direction shall not exceed 1/16". Where connection points are not clearly defined, maximum anchor deflection shall not exceed 1/16".

   c). Stresses must take into account interaction and in no case shall allowable values exceed the yield stress.

   d). At 1.5 times design pressure, permanent deflections of framing members must not exceed 1/1000 of the span length, and components must not experience failure or gross permanent distortion. At connection points of framing members to anchors, permanent set shall not exceed 1/16".

E. Flatness Criteria
1. Maximum 1/8" in 15'-0" on panel in any direction for assembled units. (Non-accumulative)

F. General Approval
1. Composite panel manufacturer shall have an engineered report.

1.03 TESTS
A. Bond Integrity Test: When in accordance with ASTM D 1781-76 for bond integrity, simulating resistance to de-lamination (No other best procedure is acceptable):

1. Peel strength: 33.6 in lb/in (min)

B. Fire Performance
1. ASTM E84-79 - Maximum value flame spread 0, smoke developed 0

2. UBC 17-5 - No flame spread along interior face or penetration through the wall assembly

3. ASTM 162 - No surface flaming

1.04 SUBMITTALS
A. Submittal: Submit pertinent catalog details and calculations, as required.

B. Samples: Submit 8" x 8" sample of panel system in specified finish, if available, fabricated into units representative of the actual calculations.

C. Shop Drawings: Submit CAD generated shop drawings showing profiles of panel units, details of forming, joint supports, anchorages, trim, flashings, sealants and accessories. Show details of weatherproofing at edge terminations, show elevations, and layout of entire work.

1.05 PRODUCT HANDLING
A. After acceptance of panels on a given elevation, protection shall be the responsibility of the General Contractor.

2.00 PRODUCTS
2.01 SPECIFIED MANUFACTURER
A. General:
1. Metal Design Systems Inc. Series 30 wall panel assembly
930 27th Ave. SW Cedar Rapids, Iowa 52404
319-362-7454 or sales@cmdsi.com

B. Description
1. The system shall consist of panels by Alpolic manufactured by Mitsubishi Chemical of America, a division of Mitsubishi Chemical Corporation, and a system of custom aluminum extrusions of size and shape indicated on drawing as specified herein. The panel shall utilize extruded aluminum clips and a secondary framing system.

C. Alpolic
1. Composite: Two sheets of aluminum sandwiching a core of extruded thermoplastic, formed in a continuous process with no glues or adhesives between dissimilar materials. Total composite thickness is 4mm.

2. Face Sheets: 0.020" thick aluminum (alloy to be 3003 for coil-coated sheet or 5005 for anodized).

3. Finish: Exterior surfaces shall be coil coated Megaflon, a second-generation thermosetting lumiflon resin based 100% fluoropolymer coating meeting AAMA 605.2 (standard) designed to provide an automotive-quality finish with bright colors and 15% to 80% gloss on architectural building panels. In particular, the coating must have successfully passed the following or equal tests:

a) Humidity Resistance
I. Test Method: ASTM D-2247
a). No formation of blisters when subjected to condensing water fog at 100% relative humidity and 100 degree Fahrenheit for 3000 hours.

b). Salt Spray Resistance
I. Test Method: ASTM B-117; expose coating system to 3000 hours, using 5% NaCl solution.
i. Corrosion creepage from scribe line: 1/8" max. (1.6mm)
ii. Minimum blister rating of 8 within the test specimen field

c). Weather Exposure
I. Outdoor
i. Ten year exposure at 45 degree angle facing south Florida exposure
ii. Maximum color change of 5 Delta E units as calculated in accordance with ASTM D-2244
iii. Maximum chalk rating of 8 in accordance with ASTM D-659
iv. No checking, crazing, adhesion loss

4. Color:
a). Select from Alpolic or Reynobond color chart or submit request for custom color.

5. Core:
a). Thermoplastics

D. Panel System:
1. Perimeter Edge Trim: Extruded aluminum offset clips which integrate to the continuous sub-system as detailed on drawings, so as to provide the following essential features:
a). Rout and return of the Alpolic or Reynobond on all perimeters.

b). Return leg of Alpolic or Reynobond shall be supported by extruded clips on all four sides.

c). Maximum overall panel thickness can vary as required by design. Absolute minimum is 2"

d). The Alpolic panel shall be held in place by a fastener to the extrusion base into wall.

e). Extrusions shall be mill finish.

2. Stiffeners:
a). Aluminum sections secured to the return leg of the panel and bonded to rear face of Alpolic or Reynobond with silicone, and of sufficient size and strength to maintain flatness of the panel within the specified tolerances. Stiffeners shall have a mill finish.

3. Reveals at Panel:
a). Joints shall be 1/2" wide, nominal.

b). Joints will be recessed .

c). Joints can be same color as panels or accent color

E. Flashings:
1. Fabricate flashing from aluminum sheet in matching color, where exposed to view finish to match adjacent panels. Provide lap strip under flashing at abutted conditions; with lapped surfaces sealed with a full-bed of non-hardening sealant.

2.02 FABRICATION:
A. Fabricate panel units to dimensions indicated on the drawings based on an assumed design temperature of 70 degrees F. Allow for ambient temperature range of time of fabrication and erection.

B. Fabricate panels in sizes shown using composite aluminum panel material and perimeter extrusion so that the panel thickness at the joinery is as required by design. Completed panel shall be properly fabricated and designed so that no restraints can be placed on the panel, which might result in compressive skin stresses. The installation detailing shall be such that the installed panels shall remain flat due to temperature changes. Oil canning of panel surface is not acceptable.

C. Shop fabricate units ready for erection. If not shop assembled, pre-fabricate components at the shop as required for proper and expeditious field assembly

D. Design, fabricate, assemble, and erect wall panel units.

E. Where drawings indicate, factory curve panels to required radius. Special considerations for design required Contact Metal Design Systems Engineering.

F. Provide stiffeners secured to rear face of panels mechanically fastened to edge trim members, with spacing as required by specific job wind loading.

3.00 **EXECUTION**:

3.01 DELIVERY AND STORAGE:

A. Delivery: Deliver fabricated units and component parts identified per erection drawings.

B. Protection of Surfaces: Protect surfaces from damage during shipping and erection. Inspect work for damage upon delivery - no damaged work permitted on job site.

C. Storage: Coordinate with General Contractor for storage space.

D. Panel Penetrations: Penetrations, other than those shown on the Architectural Drawings, required by other trades shall be done either by the trade involved or as an add to this contract with the trade involved bearing the cost.

3.02 INSPECTION:

A. Examine supporting structure and conditions under which the work is to be erected, and notify the Contractor in writing of conditions detrimental to proper and timely completion of the work. Do not proceed with erection until unsatisfactory conditions have been corrected.

3.03 INSTALLATION - ERECTION:

A. General:

1. Do not install component parts, which are observed to be defective, including warped, bowed, dented, abraded and/or broken members.

2. Do not cut, trim weld, or braze component parts during erection, in a manner which would damage finish, decrease strength, or result in a visual imperfection or a failure in performance of wall panels. Return component parts which require alteration to shop for re-fabrication, if possible, or for replacement by new parts.

3. Metal Separation: Apply a coat of bituminous paint, concealed, on one or both surfaces wherever dissimilar metals would otherwise be in contact. Use casketed fasteners where needed to eliminate the possibility of corrosive or electrolytic action between metals.

4. Anchor component parts of the metal wall securely in place, allowing for necessary thermal structural movement.

3.04 CLEANING AND PROTECTION:

A. After installation of panels on a given elevation, any additional protection shall be the responsibility of the General Contractor.

B. Deposit all trash from panel shipping crates in General Contractor's furnished debris dumpsters.

C. Make sure perimeter sealants have been installed next to adjacent perimeter materials.

D. Remove protective film at time of panel installation

3.05 PANEL REPLACEMENT: (Optional)

A. Owner shall be provided with _____sheets of Alpolic _____ X _____.

ADDITIONAL NOTES FOR SPECIFICATION WRITER

1. Other possible additions to this specification may include:
   A. Structural stud or tube system for support of wall system.

2. Parapet flashing may be excluded from this section and included in sheet metal section.

END OF SECTION

THE INFORMATION CONTAINED IN THIS DRAWING IS THE SOLE PROPERTY OF METAL DESIGN SYSTEMS. ANY REPRODUCTION IN PART OR WHOLE WITHOUT THE WRITTEN PERMISSION OF METAL DESIGN SYSTEMS IS PROHIBITED.

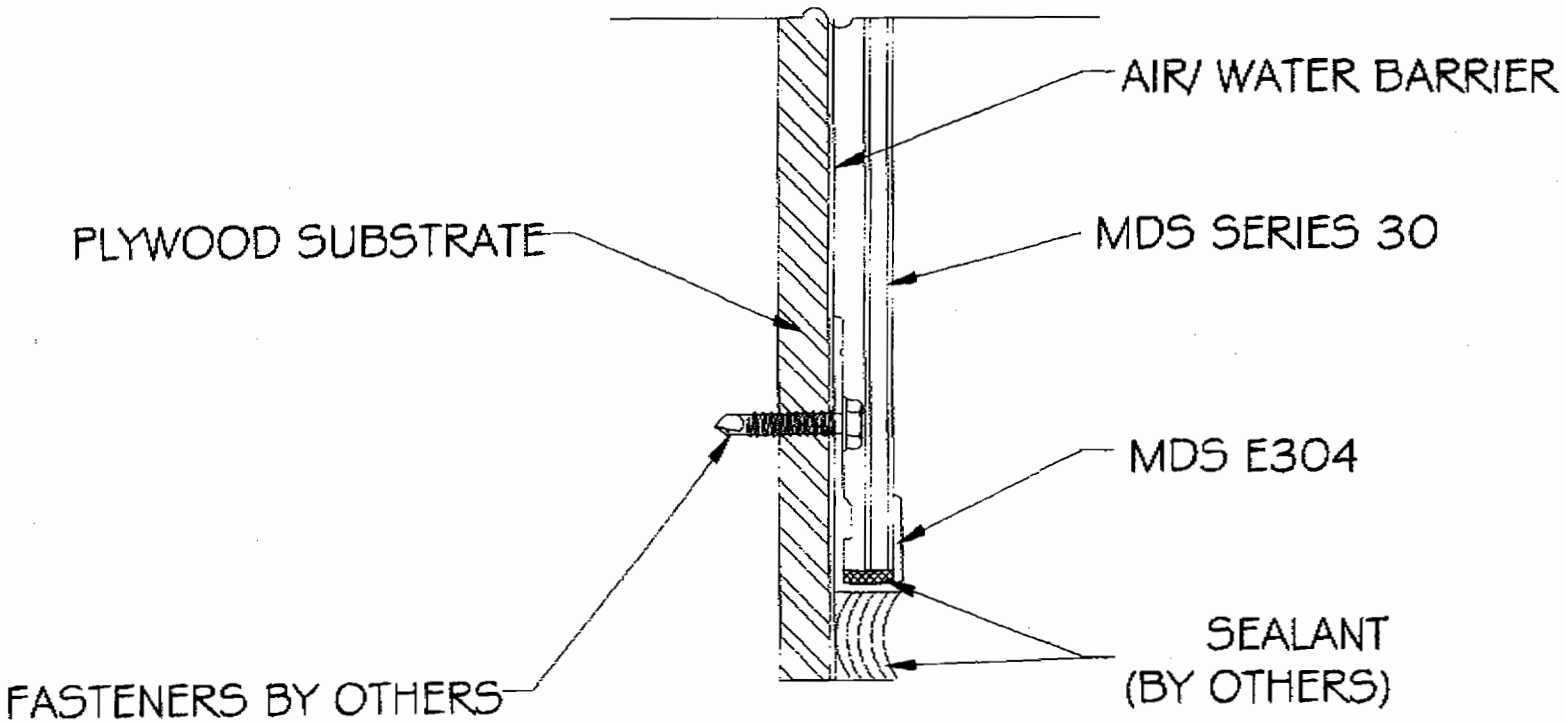

Metal Design Systems
930 27TH AVE. S.W.
CEDAR RAPIDS, IA. 52404
Ph. (319) 362-7454

PROJECT: MDS SERIES 30				
PART NAME: JAMB DETAIL				
MATERIAL	SIZE: A	PROJECT NO.	DWG NO.: 500-30-03	REV
FINISH	SCALE	DRAWN BY: L.M.B.	DATE: 09/02/05	SHEET 3 OF 18

ORMATION CONTAINED IN THIS DRAWING IS THE SOLE PROPERTY OF
DESIGN SYSTEMS. ANY REPRODUCTION IN PART OR WHOLE WITHOUT
RITTEN PERMISSION OF METAL DESIGN SYSTEMS IS PROHIBITED.

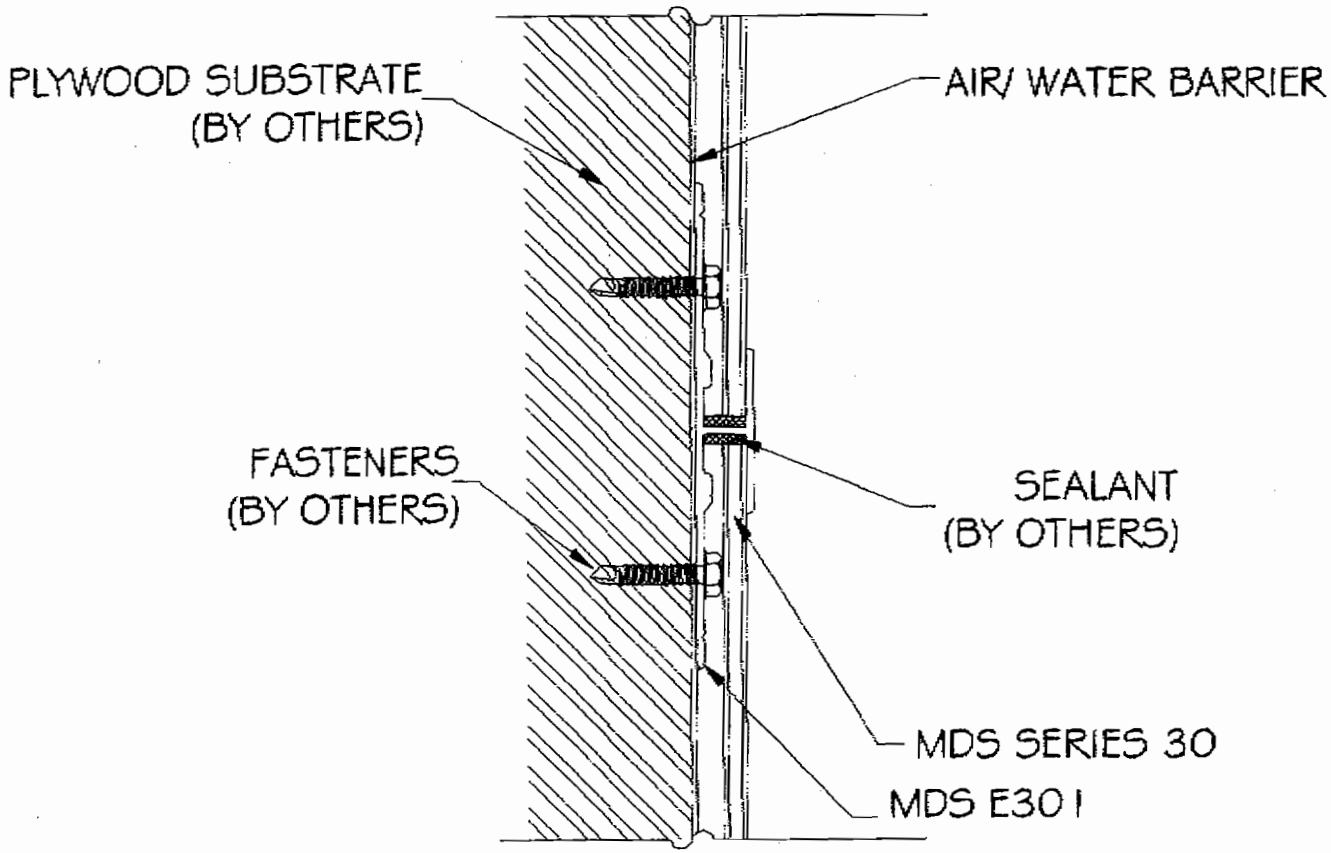

Metal Design Systems 930 27TH AVE. S.W. CEDAR RAPIDS, IA. 52404 Ph. (319) 362-7454	PROJECT: MDS SERIES 30			
	PART NAME: HORIZONTAL DETAIL			
MATERIAL	SIZE: A	PROJECT NO.	DWG NO.: 500-30-05	REV
FINISH	SCALE	DRAWN BY: L.M.B.	DATE: 09/02/05	SHEET 5 OF 18

11/27/2006 12:18 8106484943 WAGESTER PAGE 11

THE INFORMATION CONTAINED IN THIS DRAWING IS THE SOLE PROPERTY OF METAL DESIGN SYSTEMS. ANY REPRODUCTION IN PART OR WHOLE WITHOUT THE WRITTEN PERMISSION OF METAL DESIGN SYSTEMS IS PROHIBITED.

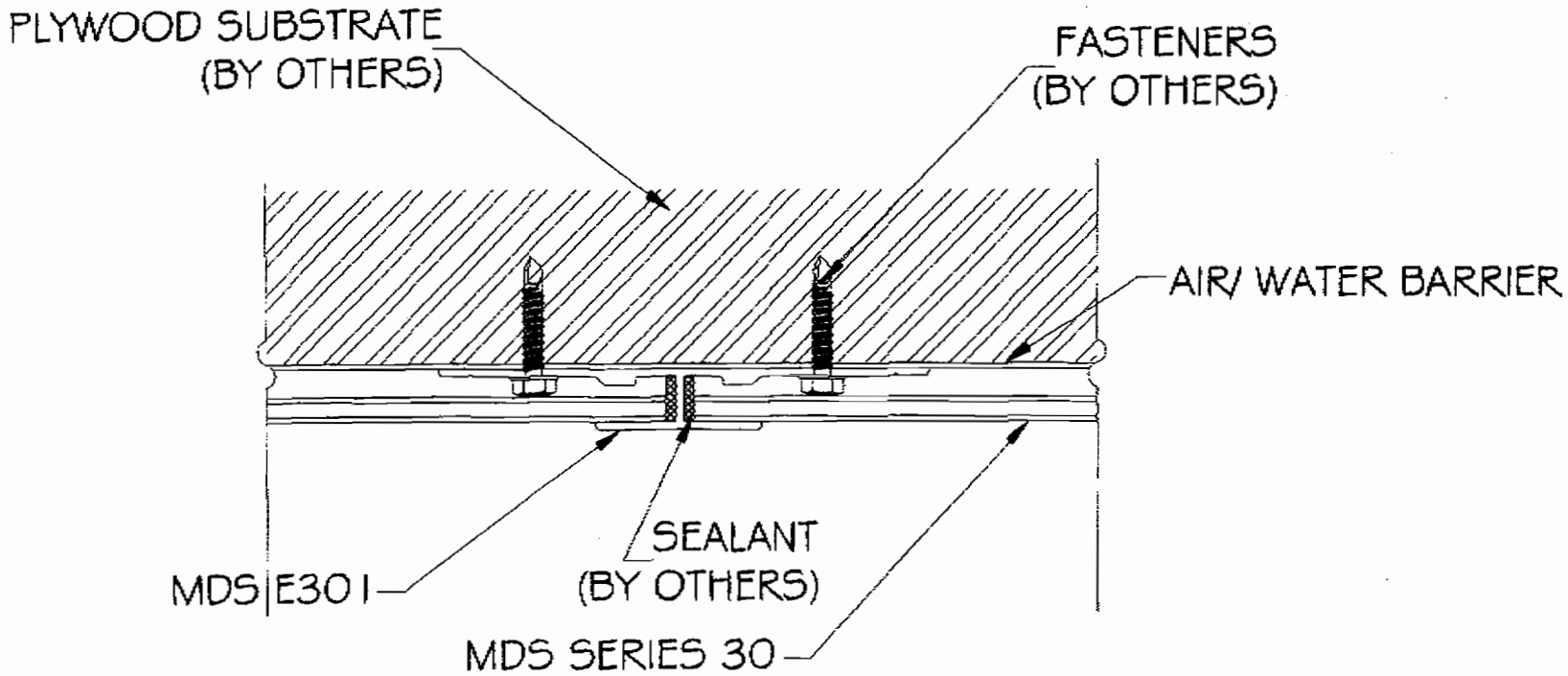

Metal Design Systems 930 27TH AVE. S.W. CEDAR RAPIDS, IA. 52404 Ph. (319) 362-7454	PROJECT: MDS SERIES 30			
	PART NAME: VERTICAL DETAIL			
MATERIAL	SIZE: A	PROJECT NO.	DWG NO.: 500-30-07	REV
FINISH	SCALE	DRAWN BY: L.M.B.	DATE: 09/02/05	SHEET 7 OF 18

WAGESTER 8106484943 11/27/2006 12:18

THE INFORMATION CONTAINED IN THIS DRAWING IS THE SOLE PROPERTY OF METAL DESIGN SYSTEMS. ANY REPRODUCTION IN PART OR WHOLE WITHOUT THE WRITTEN PERMISSION OF METAL DESIGN SYSTEMS IS PROHIBITED.

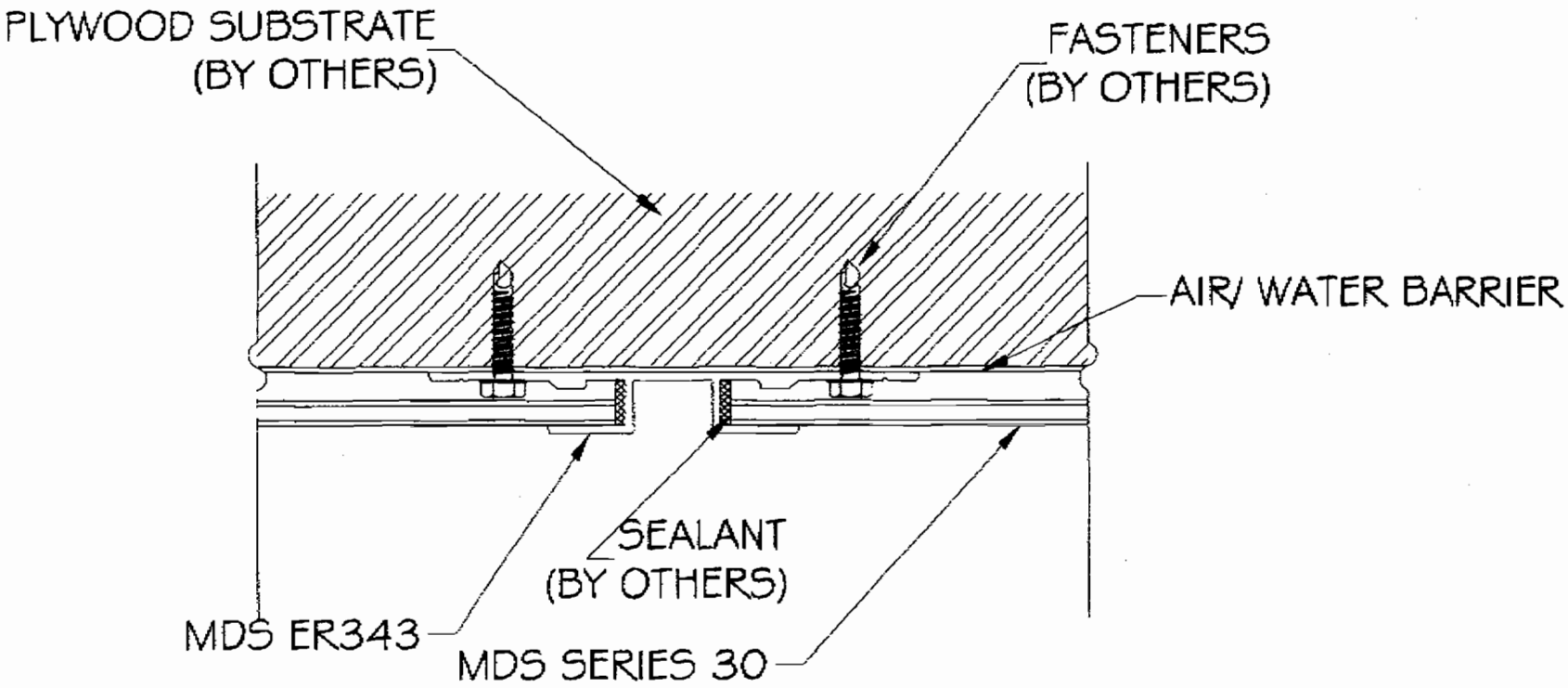

Metal Design Systems
930 27TH AVE. S.W.
CEDAR RAPIDS, IA. 52404
Ph. (319) 362-7454

PROJECT: MDS SERIES 30				
PART NAME: VERTICAL DETAIL				
MATERIAL	SIZE: A	PROJECT NO.	DWG NO.: 500-30-08	REV
FINISH	SCALE	DRAWN BY: L.M.B.	DATE: 09/02/05	SHEET 8 OF 18

THE INFORMATION CONTAINED IN THIS DRAWING IS THE SOLE PROPERTY OF METAL DESIGN SYSTEMS. ANY REPRODUCTION IN PART OR WHOLE WITHOUT THE WRITTEN PERMISSION OF METAL DESIGN SYSTEMS IS PROHIBITED.

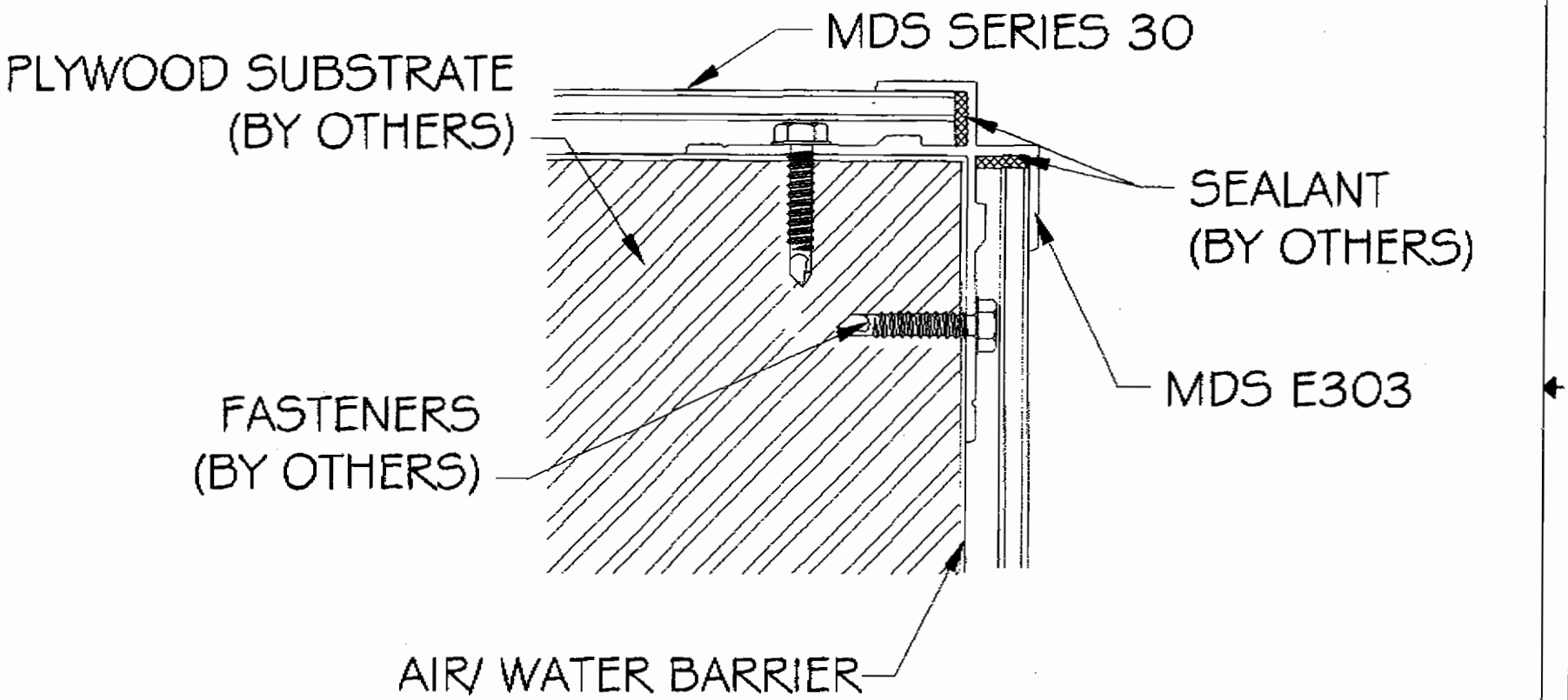

Metal Design Systems
930 27TH AVE. S.W.
CEDAR RAPIDS, IA. 52404
Ph. (319) 362-7454

PROJECT: MDS SERIES 30				
PART NAME: OUTSIDE CORNER DETAIL				
MATERIAL	SIZE: A / PROJECT NO.		DWG NO. 500-30-10	REV
FINISH	SCALE	DRAWN BY: L.M.B.	DATE 09/02/05	SHEET 10 OF 18

SPEC DATA

METAL WALL PANELS 07 42 13

Mitsubishi Chemical FP America, Inc.

ALPOLIC®

1. Product Name

ALPOLIC® Aluminum Faced Composite Panel

2. Manufacturer

Mitsubishi Chemical FP America, Inc.
401 Volvo Parkway
Chesapeake, VA 23320
(800) 422-7270
Fax: (757) 436-1896
E-mail: info@alpolic.com
www.alpolic-usa.com

3. Product Description

BASIC USE

ALPOLIC® is a lightweight, rigid, bendable and durable aluminum faced composite panel widely used as an interior and exterior wall cladding in commercial and institutional applications. It offers flexibility in design through a wide variety of fabrication techniques, including panels into curves, angles and pan configurations.

COMPOSITION & MATERIALS

ALPOLIC panels consist of a core of thermoplastic material thermally bonded to face sheets fabricated of aluminum 3105 H14 alloy, 0.020" (0.5 mm) thick or an equivalent.

TYPES

Several types of ALPOLIC panels are available including:

- ALPOLIC standard panels
- ALPOLIC A-LOOK® reflective finish panels
- ALPOLIC Stone Series simulated stone finish panel
- ALPOLIC copper mill finish panels
- ALPOLIC anodized classic finish panels

SIZES

ALPOLIC panels are available in 3, 4 and 6 mm thicknesses in standard widths of 50" and 62" (1270 and 1575 mm) and in standard lengths of 122", 146" and 196" (3099, 3708 and 4978 mm).

A range of custom sizes is available:

- Width - 32" - 62" (813 - 1575 mm)
- Length - 76" - 24' 2" (1930 - 7366 mm)

FINISHES

- CORAFLON® FEVE Lumiflon® resin based fluoropolymer coil coat meeting AAMA 2605 (standard)
- Polyester
- Class I anodized - Clear and dark bronze

Standard ALPOLIC with CORAFLON FEVE fluoropolymer finishes are available in a broad spectrum of gloss levels, from 15 - 80%. Contact the manufacturer for minimum quantities and availability. CORAFLON, in its ambient cure spray product, allows close-matching field touch-up and recoat.

A-LOOK Series offers an array of reflective surfaces for interior and exterior application. Stocked colors are chrome, gold and bronze.

Stone Series is a simulated stone fluoropolymer finish combined with fluoropolymer colors in white marble and red, pink, white and black granite finishes

ALPOLIC CORAFLON FEVE colors are available in full gloss range with minimum 1000 ft² (93 m²) coil coated orders. Allow 8 weeks for shipment of custom colors.

Complete custom color matching, available in ALPOLIC CORAFLON FEVE coatings, is subject to minimum order quantities.

A selection of stock fluoropolymer colors is available in a quick ship program in 4 mm panel thickness.

Quick Ship stock 4 mm thick ALPOLIC panel selections. Contact Mitsubishi Chemical America, Inc. (MCFPA), customer service for color and size availability.

SHAPES & FABRICATION

ALPOLIC panels can be cut, routed and formed with conventional woodworking tools. Angle bends are formed by routing the back of the panel prior to shaping. The common pan shape is formed by routing the back edges, trimming the corners and bending and reinforcing the edges.

ALPOLIC can be rolled on a pyramid or 4-stand roll bender to a curved shape for curved corners or column covers. Bumping on a press brake also can be used to produce a curved surface.

The bending radius of ALPOLIC 4 mm panels is as small as 2" (51 mm). Corner radii can be detailed as small as 1/8" (3.2 mm) using the back routed method described in ALPOLIC literature.

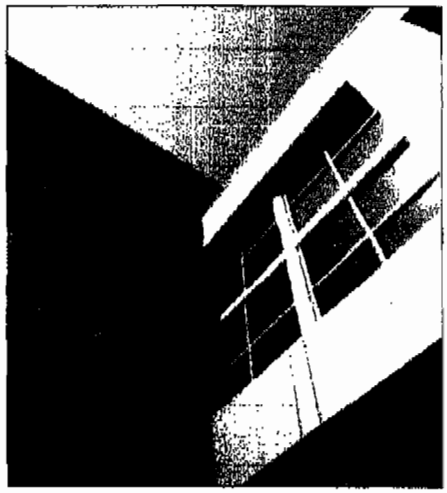

4. Technical Data

APPLICABLE STANDARDS

American Architectural Manufacturers Association (AAMA) - AAMA 2605 Voluntary Specification for High Performance Organic Coatings on Architectural Extrusions & Panels

ASTM International

- ASTM C297 Standard Test Method for Tensile Strength on Flat Sandwich Constructions in Flatwise Plane
- ASTM C976 Standard Test Method for Thermal Performance of Building Assemblies by Means of a Calibrated Hot Box (Withdrawn 2002)
- ASTM D635 Standard Test Method for Rate of Burning and/or Extent and Time of Burning of Self-Supporting Plastics in a Horizontal Position
- ASTM D696 Standard Test Method for Coefficient of Linear Thermal Expansion of Plastics Between -30°C and 30°C With a Vitreous Silica Dilatometer
- ASTM D1037 Standard Test Method for Evaluating Properties of Wood-Base Fiber and Particle Panel Materials
- ASTM D1781 Standard Test Method for Climbing Drum Peel for Adhesives
- ASTM D1929 Standard Test Method for Determining Ignition Temperature of Plastics
- ASTM E8 Standard Test Method for Tension Testing of Metallic Materials
- ASTM E72 Standard Test Methods for Conducting Strength Tests of Panels for Building Construction
- ASTM E84 Standard Test Method for Surface Burning Characteristics of Building Materials
- ASTM E108 (Modified) Standard Test Methods for Fire Tests of Roof Coverings
- ASTM E283 Standard Test Method for

SPEC-DATA® and MANU-SPEC® are registered trademarks of Reed Elsevier Inc. The firm that SPEC-DATA formed conforms to the editorial style of The Construction Specifications Institute and is used with their permission. The manufacturer is responsible for technical accuracy. ©2006 Reed Construction Data®. All Rights Reserved.

Reed Construction Data

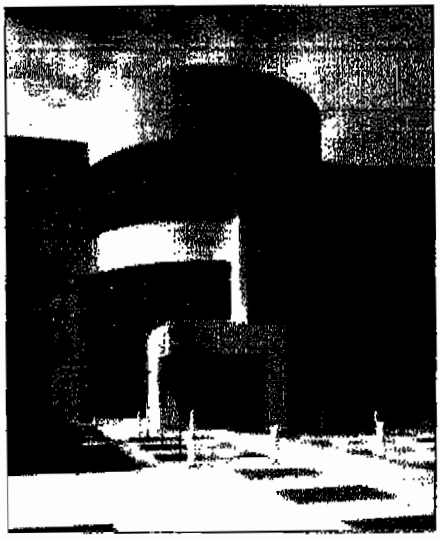

Determining the Rate of Air Leakage Through Exterior Windows, Curtain Walls, and Doors Under Specified Pressure Difference Across the Specimen

- ASTM E330 Standard Test Method for Structural Performance of Exterior Windows, Curtain Walls, and Doors by Uniform Static Air Pressure Difference
- ASTM E331 Standard Test Method for Water Penetration of Exterior Windows, Curtain Walls, and Doors by Uniform Static Air Pressure Difference
- ASTM E413 Standard Classification for Rating Sound Insulation

Miami Dade NOA 03-0130.06/.07

PHYSICAL/CHEMICAL PROPERTIES
See Table 1.

FIRE PERFORMANCE
See Table 2.

TABLE 1 PHYSICAL PROPERTIES

Properties	ALPOLIC 4 mm	ALPOLIC 6 mm	A-LOOK 2 mm	A-LOOK 3 mm
Aluminum thickness, in (mm)	0.020 (0.5)	0.020 (0.5)	0.010 (0.25)	0.010 (0.25)
Weight, psf (kg/m²)	1.12 (5.5)	1.50 (7.32)	0.59 (2.9)	0.80 (3.9)
Coefficient of expansion, ASTM D696, in/in°F (mm/mm/°C)	13 × 10⁻⁶	13 × 10⁻⁶	13 × 10⁻⁶	13 × 10⁻⁶
Tensile strength, ASTM E8, psi (MPa)	6913 (48)	4978 (35)	-	-
Yield strength, ASTM E8, psi (MPa)	6429 (44)	4466 (30)	-	-
Elongation	13.5%	17.5%		-
Thermal conductance, ASTM C976, Btu/(ft² × h × °F) (W/(m² × K))	10.75 (18)	8.53 (14)	-	-
Drum peel, ASTM D1781, in-lb/in (N-mm/mm)	33.6 (150)	33.6 (150)	-	-
Thermal resistance, ft² × h × °F/Btu (m² × K/W)	0.09 (0.016)	0.12 (0.021)	-	-
Sound transmission coefficient, ASTM E413	26	26	-	-
Accelerated aging, ASTM D1037	Pass	-	-	-

TABLE 2 FIRE PERFORMANCE PROPERTIES

Properties	ALPOLIC 4 mm	ALPOLIC 6 mm
Surface burning characteristics, ASTM E84		
Smoke developed index	0	10
Flamespread index	0	0
Vertical transmission, ASTM E108 (modified)	Passed	Passed
Ignition temperature, ASTM D1929		
Flash ignition	716°F (380°C)	
Self-ignition	752°F (400°C)	
Rate of burning, ASTM D635	CCI	-

5. Installation

PREPARATORY WORK
The manufacturer recommends field measurement prior to fabrication. Verify alignment of surfaces to receive panels.

APPLICATION
ALPOLIC surfaces can be attached to one another or to other materials by conventional methods of attachment - rivets, bolts or screws. For interior installation, flat surfaces of ALPOLIC can be attached to substrates such as gypsum board using double-faced tape or nonhardening adhesive.

PRECAUTIONS
ALPOLIC panels are prefinished architectural products requiring care in handling to avoid damage to the finish. Handle, store, install and clean panels following the manufacturer's instructions. Comply with manufacturer's recommendations regarding expansion and contraction in detailing and installing ALPOLIC.

6. Availability & Cost

AVAILABILITY
ALPOLIC panels are available worldwide through the regional offices of Mitsubishi Chemical FP America (MCFPA). Contact Mitsubishi for the location of an area ALPOLIC representative.

COST
Contact the area representative or the MCFPA home office for ALPOLIC pricing. Costs vary due to project size, finish selection and panel sizes.

7. Warranty

Contact the manufacturer for information on panel and finish warranties.

8. Maintenance

CORAFLON FEVE fluoropolymer is a long-term, maintenance-free finish. Under normal exposure and use, it is self-cleaning through rain washing. Water flush or power washing with a mild detergent is recommended to remove heavy soil.

9. Technical Services

Contact ALPOLIC for technical assistance with design and specification or for the name of a nearby representative.

10. Filing Systems

- Reed First Source
- MANU-SPEC®
- Additional product information is available from the manufacturer.

SPEC-DATA® and MANU-SPEC® are registered trademarks of Reed Elsevier Inc. The ten part SPEC-DATA format conforms to the editorial style of The Construction Specifications Institute and is used with their permission. The manufacturer is responsible for technical and/or [illegible] Reed Construction Data®. All Rights Reserved.

Reed Construction Data

BMC RFI 10

RECEIVED
NOV 24 2006
BY

BARTON MALOW COMPANY

DCR/RFI

Date 11/25/2006

To: Leah

VIA BARTON MALOW COMPANY

FROM Jeff Sordyl ARJAC INC.
FAX (313) 383-8234

DCR/RFI #

Contractors reference #

Project
Three Middle Schools

BMC Project #

A/E Project #

Bid Package #

Bid Category #

Return To: ARJAC INC

Reference Specs:

Reference Drawings

Request:

1) Item 21 and Item 26 contradict each other. Please Advise
2) What is meant by item #7
3) Are we to plan on two temp walls at each school ← Smith only SSB-BMC
4) Is every existing area on code compliance plan intended to be fire sprayed
5) There is no page A2.5 in drawings for Smith ← will be in addendum SSB-BMC

1. We'll correct.
2. Means the same. If Spray insulation required behind metal panel and/or substrate the 6.1 Category is installing the insulation is by 6.1. Bid Category 4.1 will install insulation where bride will be installed. We'll clarify in the Addendum.

Jeff Sordyl — 1/25/2006
Contractor or subcontractor — Submitted By — Date

2. If existing framing (wall) is not sufficient to install new door/window Barton Malow Company. 6.1 must rectify. Necessary to look at existing construction.

Reply: 4. Carpenter's 6.1 bid allowance will be increased so existing walls can be Sprayed to meeting rating if needed. New walls that will be in 6.1 bid or 4.1 depending on type of wall.

Reviewed By

Attachments:

This clarification is interpreted to be within the scope of the referenced contracts issued in accordance with the Contract Documents, and without change in Contract Sum or Contract Time, and, as such, is not an authorization for work beyond the scope of the contract.

Architect/Engineer — Reply By — Date 11.29.06

Stahley, Kelly

From: Bossert, Leah
Sent: Tuesday, November 28, 2006 3:45 PM
To: Stahley, Kelly
Subject: FW: Troy Schools Remodel & Addition

RFI #11

Leah S.Bossert
Project Manager, Barton Malow
Troy School District Team
1301 Boyd, Troy MI 48083
248-823-4631 ph
248-823-4672 fax
-----Original Message-----
From: Bryan Haymond [mailto:BHaymond@CurtisGlass.com]
Sent: Tuesday, November 28, 2006 3:42 PM
To: Bossert, Leah
Subject: Troy Schools Remodel & Addition

~~Leah,~~

I am looking at the Architectural drawings for Smith M.S. and they consistently note section 07415 which I do not have a spec. for. I assume that it is 07412 but I would like clarification from you.

Thank you,

A: ~~Technical Specifications include 07412~~ Metal Wall Panels – this is the intent.

LSB 12.6.06

Bryan Haymond
Assistant Project Manager
Curtis Glass Company
p. 248.744.4480
f. 248.744.4485
c. 586.863.2498

2643-12 CA PB RFI-012

REQUEST FOR INFORMATION

Dependent Insulation Co., Inc.
910 E. Drayton
Ferndale, MI 48220
PH: (248) 546-2707
FX: (248) 546-7862

RFI 12

DEC 05 2006

PROJECT:	Troy Schools BP #9361
DATE:	12/01/06
TO:	Leah Bossert, Project Manager
COMPANY:	Barton Malow Company
EMAIL:	leah.bossert@bartonmalow.com
SUBJECT:	Exposed Ductwork
SPEC. REF.:	15080, page 23 paragraph 3.15
INFORMATION REQUESTED:	No specification is given for insulation of Chilled Water piping.
QUESTION:	Please clarify what insulation application is required for the Chilled Water.

Attention: Todd Hanet
Kingscott
Rob
12-1-06
p. 1 of

12/4... pls note changed #'s
Thx,
Kell

Please see Addendum #1.

REPLY:

BY: [signature] DATE: 12/04/06

2643-12 CA PB RFI-013

REQUEST FOR INFORMATION

Dependent Insulation Co., Inc.
910 E. Drayton
Ferndale, MI 48220
PH: (248) 546-2707
FX: (248) 546-7862

RFI 13 p. 2 of

RECEIVED
DEC 05 2006
BY:

PROJECT: Troy Schools BP #9361

DATE: 12/01/06

TO: Leah Bossert, Project Manager

COMPANY: Barton Malow Company

EMAIL: leah.bossert@bartonmalow.com

SUBJECT: Exposed Ductwork

SPEC. REF.: 15080, page 22 paragraph 3.13

INFORMATION REQUESTED: The specification requires exposed ductwork to be insulated with 2 lb/cu.ft. mineral fiber board insulation. Mineral fiber board is only available in 3 lb./cu. ft., 6 lb./cu. ft., and 8 lb./cu. ft. applications.

QUESTION: Please clarify the correct application for exposed ductwork.

PROVIDE SPECIFIED INSULATION. CERTAINTEED JOHNS MANVILLE & KNAUF ALL PROVIDE MINERAL FIBER BOARD INSULATION WITH 2.25 lb/cu.ft.

REPLY:

BY: Ed @ Clebel DATE: 12/04/06

2643-12 CA RFI-014

REQUEST FOR INFORMATION

Dependent Insulation Co., Inc.
910 E. Drayton
Ferndale, MI 48220
PH: (248) 546-2707
FX: (248) 546-7862

RECEIVED
DEC 05 2006
BY:

p. 3of

PROJECT:	Troy Schools BP #9361
DATE:	12/01/06
TO:	Leah Bossert, Project Manager
COMPANY:	Barton Malow Company
EMAIL:	leah.bossert@bartonmalow.com
SUBJECT:	Lined Ductwork
SPEC. REF.:	None
DWG REF:	M3.1, 3.2, 3.3
INFORMATION REQUESTED:	Note 2 on drawings M3.1, 3.2, and 3.3 states "Provide duct lining downstream of sound attenuator or heating coil."
QUESTION:	~~Does this note refer to the entire page of~~ just the ducts indicated with the note?

REPLY:

BY: Edw A Cleland DATE: 12/04/06

12-05-06 10:15am From-kingscott associates NCY 2693819110 T-366 P.001/001 F-626
12/05/2006 09:05 2693812944 UCBA PAGE 02/02

12-04-06 05:49pm From-kingscott associates NCY 2693818110 T-348 P.001/001 F-605
12/04/2006 15:57 2488234672 BMC-TROY PAGE 02/10
12/01/2006 17:54 FAX 17348717847 ABC PAVING CO 001

KLR KWP
ME ILK

COPY

ABC Paving Company
2650 Van Horn Road
Trenton, MI 48183
PH: (734) 671-2120

RECEIVED DEC 01 2006 BY:

2643-12 CA PB RFI-015

[redacted]

RFI#15

TO:	Leah @ Barton Malow	Fax:	248-823-4672
From:	Miriah Walsh	Date:	December 1, 2006
RE:	Smith Middle School Boulan Middle School	Pages:	1
CC:			

RECEIVED DEC 05 2006 BY:

☒ Urgent ☐ For Review ☐ Please Comment ☒ Please Reply ☐ Please Recycle

Hi,
I'm bidding the EW Bid division for this project and have a few questions.

For Boulan Park, it's hard to tell where the school would like the proposed curbs. In addition, since there's concrete curbs and asphalt curbs it's also difficult to tell them apart. Please clarify.

The run of pipe from CB#3 to CB #2 is indicated on the drawings as being 90 LF, but that is incorrect. The quantity should be +/- 115 LF ✓

Thanks,
Miriah

THERE IS APPROX. 31 LFT NEW CONC. CURB SOUTH OF NEW NORTH CURB RAMP, ±14 LFT CURB REPLACEMENT DUE TO POOR CONDITION, ±10 LFT CURB REPLACEMENT FOR SMOOTH TRANSITION TO NEW. THIS CONC. CURBING SHOULD MATCH EXISTING - STRAIGHT CURB W/O GUTTER (VERIFY IN FIELD)

NEW WALK (E) THIS INTEGREGRAL CURB

(B) INDICATES NEW ASPHALT CURB TO MATCH EXISTING

PIPE RUN FROM CB3 TO CB2 S/B ± 115 LFT

DEC 0 1 2006

2043-12 CA PB RFI-016

ATLANTIC STONEWORKS INC.
1757 LARCHWOOD - TROY, MICHIGAN. 48083 USA
Tel: (248) 524-1044 | Fax: (248) 619-0977 | info@atlantic-stoneworks.com
www.atlantic-stoneworks.com

RFI #16

RECEIVED
DEC 01 2006
BY:

Fax

To:	Barton Malow/ Engineering Dept.	**From:**	Jeremy F.
Fax:	248-823-4672	**Pages:**	PAGES, INCLUDING COVER
Phone:	248-823-4631	**Date:**	12-1-06
Re:	R.F.I,	**CC:**	

☑ Urgent ☐ For Review ☐ Please Comment ☑ Please Reply ☐ Please Recycle

Engineering Dept.,

I just spoke with a woman named Kelly I believe. I am looking for some information regarding the three middle schools for the ceramic tile work. I have a color layout plan for Unit 200 for the Smith school but am missing units 100, 300, and 400. I found room 208 has ceramic tile and a wall detail but there all other info is missing. Also when is the bid due? I have not heard a due date. Thank you

Jeremy F.
Estimator

SEE FLOOR PLANS FOR COLOR & FINISH INFO IN OTHER AREAS.

-TEH, KAJ. 12/4/06

12.7.06
BIDS ARE DUE @ 3PM ON 12/19/2006.
-KS

FAX: 248.332.0256

Barton Malow Company
Barton Malow
Design/Construction Services

BARTON MALOW COMPANY
1301 Boyd
Troy, MI 48083
Phone: 248-823-4631
Fax: 248-823-4672

RECEIVED
DEC 01 2006
BY:

RFI #17

Date: 12/1/06
To: Kelly - Project Engineer
VIA Barton Malow Company
From: Mike Durst P.C.P.

RFI #:
Contractor's Reference #:
Project: Phase I - Three Middle Schools Remodeling & Addition
BMC Project #: 041049
A/E Project #: 2643-12
Bid Package #: 9381
Bid Category #: 6-1 Carpentry & Acoustical
Return to: 248-332-0256 Attn: Mike Durst

Reference Specs:
Reference Drawings: LarsonA2.2 Rev.

Request: Room 218 Denotes 2X4 Ceiling but is called out as 2X2 @ 8'6" in two Areas?

Room 216 is Tagged 9'0" Existing 2X4, and (3) 9'0" which shows new 2x4 ceiling?

Pontiac Ceiling & Partition	Mike Durst	12/1/06
Contractor or Subcontractor	Submitted By	Date
Barton Malow Company	Reviewed By	Date

Reply:
ROOM 218 IS 2X4 @ 8'-6"

ROOM # 216 IS NEW 9'0" 2X4.

Attachments:

This clarification is interpreted to be within the scope of referenced contracts issued in accordance with the Contract Documents, and without change in Contract Sum or Contract Time, and, as such, is not an authorization for work beyond the scope of the contract.

KINGSCOTT		12/4/06
Architect/Engineer	Reply By	Date

RFI Response Posted on Drawings
Contractors Copied

RFI # 18

Heights Heating & Cooling, Inc.

RECEIVED DEC 04 2006 BY:

DEC 05 2006

Fax

To:	BARTON MALOW	From:	Bob Gallant
Fax:	248-823-4672	Pages:	
Phone:		Date:	12/4/2006
Re:	RFI – SMITH MIDDLE SCHOOL	cc:	

☐ Urgent ☐ For Review ☐ Please Comment ☐ Please Reply ☐ Please Recycle

SMITH MIDDLE SCHOOL

DWG M1.1 & A2.1

WHO IS RESPONSIBLE TO OPEN CEILINGS FOR WORK IN CLASSROOMS 101 THRU 106

12/6 Refer to 3pgs follow Project Manual Section 002 10. More specifically Arch. Demo Notes #(24). -KS BMC

Phone: 248-373-5431 FAX: 248-373-4175 email: bgallant@heightsinc.com

12.5.06

Regarding this topic Steps will remain as originally written. Mechanical removes all ceiling tile.

Statement
BMCo

10-6-06

What About Grid Work These Rms ARE NOT Scheduled for New Ceilings? BG.

Heights Heating & Cooling, Inc.

DEC 04 2006

Fax

RFI #19

To:	BARTON MALOW	**From:**	Bob Gallant
Fax:	248-823-4672	**Pages:**	
Phone:		**Date:**	12/4/2006
Re:	RFI – SMITH MIDDLE SCHOOL	**CC:**	

☐ **Urgent** ☐ **For Review** ☐ **Please Comment** ☐ **Please Reply** ☐ **Please Recycle!**

SMITH MIDDLE SCHOOL

GENERAL - NOTED AIR COMPRESSOR AND DRYER IS BEING DEMO.. IS CONTROL CONTRACTOR OR MECHANICAL RESPONSIBLE FOR ITS REMOVAL? Yes / ASO 12.4

IS THERE ANY EXISTING PNEUMATIC CONTROL VALVES ON EXISTING EQUIP THAT WILL HAVE TO BE CHANGED.....AND WHO IS RESPONSIBLE ? ..... AND IS THERE A LIST OF SIZES AND TOTAL NUMBER OF UNITS ?

12.07.06 THERE ARE.... WILL BE ISSUED AS A CCD AFTER AWARD OF CONTRACT. KS, (BMC)

Phone: 248-373-5431 FAX: 248-373-4175 email: bgallant@heightsinc.com

Barton Malow Company

Barton Malow
Design/Construction Services

BARTON MALOW COMPANY
1301 Boyd
Troy, MI 48083
Phone: 248-823-4631
Fax: 248-823-4672

RFI #20

Date: 12/1/06
To: Kelly - project engineer
VIA: Barton Malow Company
From: MIKE DURST P.C.P.

RFI #:
Contractor's Reference #:
Project: Phase I - Three Middle Schools Remodeling & Addition
BMC Project #: 041049
A/E Project #: 2643-12
Bid Package #: 9361
Bid Category #: Carpentry & Acoustical - 6.1
Return to: 248-332-0256 ATTN: MIKE DURST

Reference Specs: Scope
Reference Drawings: Rev.

Request: (1) Clarification on Scope of work 00220-2 #14 reads that we are to Supply Mechanical and electrical fixtures & devices ??

00220-3 #21 & #26 are Contradictory. 21 Says mason is responsable for spray foam insulation at masonry walls, and 26 Says carpentry is responsable ??

Pontiac Ceiling & Partition — Contractor or Subcontractor
MIKE DURST — Submitted By
12/1/06 — Date

Barton Malow Company — Reviewed By — Date

Reply:
(1) NO - Mech & Elec will provide fixtures. 6.1 needs to coordinate layout in casework. Will clarify in Add #1.

(2) See addendum - sorry for confusion, Scopes reissued w/ clarifications.

Attachments:

This clarification is interpreted to be within the scope of referenced contracts issued in accordance with the Contract Documents, and without change in Contract Sum or Contract Time, and, as such, is not an authorization for work beyond the scope of the contract.

LSB 12.4.06

Architect/Engineer — Reply By — Date

RFI Response Posted on Drawings
Contractors Copied

NO. 46 RFI#21

Phone 810.220.5335 Fax 810.220.8288
Mailing P.O. Box 1889 · Brighton MI · 48116-8834
Office 3697 Old U.S. 23 · Suite 100 · Brighton MI · 48114

20043-12 CA #3 RFI-021

RFI#2

FAX TRANSMITTAL

RECEIVED DEC 0 6 2006

DEC 0 6 2006

To: Kelly Stahley **From:** Ben Hurst

Company: Barton Malow Company **Pages:** 1

Phone: **Date:** December 1, 2006

Re: Boulan Park, Larson and Smith Elementary School Remodeling & Additions

☐ Urgent ☐ For Review ☐ Please Comment ☐ Please Reply ☐ Please Recycle

• **Comments:** Please provide clarification to the following RFI for Boulan Park, Larson and Smith Elementary Schools per Bid Category – Gym Equipment 12.2:

Todd Hamer →

1. Please clarify the locations for gymnasium divider curtains per Section 11490 – Gymnasium Equipment. I have not been able to locate gymnasium divider curtains for any of the schools. Smith Elementary School electrical drawings show a gym curtain motor; however, the architectural drawings do not show any new equipment.
2. If curtains are required at all of the schools, who is responsible for demo of existing equipment folding doors and or curtains? Contractor installing new. Spec 12.4.a

Please provide clarification to the above RFI at your earliest possible convenience. If you should have any questions, please do not hesitate to call.

1. SEE SMITH MIDDLE SCHOOL FLOOR PLAN A1.04 & LOOK IN THE GYM 408 FOR THE THING DIVIDING GYM & NOTED AS "ELEC. OPERATED GYM DIVIDER ...." FOLD-UP

FAXED DEC 01 2006

2643-12 CA #3 RFI-022

RECEIVED DEC 06 2006 BY:

ABC Paving Company
2650 Van Horn Road
Trenton, MI 48183
PH: (734) 671-2120
FAX: (734) 671-2473

RFI #22

RECEIVED DEC 04 2006 BY:

TO: Leah Fax: 248-823-4672

From: Miriah Walsh Date: December 1, 2006

RE: Troy Schools Phase 3 Pages: 1

CC:

☑ Urgent ☐ For Review ☐ Please Comment ☑ Please Reply ☐ Please Recycle



Hi,

I'm bidding the EW Bid division for the above referenced project. I have a question regarding the scope of work. Item No. 20 states to include a 50,000 SF area, but doesn't state the depth. Please clarify the depth. 6" depth.

Permits are not addressed under the scope of work. Will the owner be obtaining/paying for permits? Include $3000 allowance for permits.

Todd Hanner → Also the scope of work states that permanent fencing is by this contractor, but none is shown on the drawings. Please Clarify. No FENCE IF NOT Shown

Item no. 2 states to provide 2 16' Wide Temporary Construction Roads @ Smith M.S. but doesn't state how long you want them to be. Please clarify. See addendum, lineal foot is clarified w/ sketch of temp Rd.

Thanks,
Miriah

11/6/06 Todd W. Hanner

7043-12 CP RFI 041-023

Barton Malow Company
Barton Malow
Design/Construction Services

BARTON MALOW COMPANY
1301 Boyd
Troy, MI 48083
Phone: 248-823-4631
Fax: 248-823-4672

RECEIVED
DEC 0 4 2006
BY:

RFI #23

Date: 12-04-06
To: LEAH BOSSERT
1301 Boyd
Troy 48083
VIA Barton Malow Company
From: Joe Hampton

RFI #: #1
Contractor's Reference #: Smith Middle School
Project: Phase I - Three Middle Schools Remodeling & Addition
BMC Project #: 041049
A/E Project #: 2643-12
Bid Package #: 9361
Bid Category #:
Return to: Joe Hampton

Reference Specs: 07412
Reference Drawings: A3.1 Rev.
Request: Figures 12, 13, 14 + 15 according to scale. The lower panels are 6½" x 7½". The panels which are spec'd do not come in more than 8' widths.

Union Const. Services | Joe Hampton | 12-04-06
Contractor or Subcontractor | Submitted By | Date

Barton Malow Company | Reviewed By | Date

Reply: Provide butt joint trim as req'd.
Attachments:

This clarification is interpreted to be within the scope of referenced contracts issued in accordance with the Contract Documents, and without change in Contract Sum or Contract Time, and, as such, is not an authorization for work beyond the scope of the contract.

KINGSCOTT | 12/4/06
Architect/Engineer | Reply By | Date

RFI Response Posted on Drawings
Contractors Copied

2643-12 CA #5 RFI-024

Heights Heating & Cooling, Inc.

RFI # 24

Fax

RECEIVED
DEC 04 2006

To:	BARTON MALOW	**From:**	Bob Gallant
Fax:	248-823-4672	**Pages:**	
Phone:		**Date:**	12/4/2006
Re:	RFI – BOULAN PARK	**CC:**	

RECEIVED
DEC 05 2006
BY:

☐ Urgent ☐ For Review ☐ Please Comment ☐ Please Reply ☐ Please Recycle!

RFI - BOULAN PARK

DWG ME1.1 HAVE A SCHEDULE FOR AIR COMPRESSOR , DRYER, AND 3 NEW PUMPS..

NO LOCATIONS OR INFORMATION ON DEMO, MECH, OR ELECTRICAL DWG.

Phone: 248-373-5431 **FAX: 248-373-4175** **email: bgallant@heightsinc.com**

SEE DRAWINGS M4.1 & M4.2.

Edward Clark

7043-12 CA PB Ref. 025

RFI# 25

Heights Heating & Cooling, Inc.

Fax

RECEIVED
DEC 04 2006
BY:

RECEIVED
DEC 05 2006
BY:

To:	BARTON MALOW	**From:**	Bob Gallant
Fax:	248-823-4672	**Pages:**	
Phone:		**Date:**	12/4/2006
Re:	RFI – BOULAN PARK	**CC:**	

☐ Urgent ☐ For Review ☐ Please Comment ☐ Please Reply ☐ Please Recycle

RFI –BOULAN PARK

DWG M3.2A

TI IIS DWG REFERS TO 7/M4.2 DO NOT HAVE A DWG M4.2 FOR BOULAN PARK.....

Phone: 248-373-5431 FAX: 248-373-4175 email: bgallant@heightsinc.com

M4.1 & M4.2 MAY BE MISSING. THEY WILL BE ISSUED WITH ADDENDUM #1

KA 11/5/06

2643-12 CA #3 RFI-020

Heights Heating & Cooling, Inc.

RFI #21

Fax

RECEIVED
DEC 04 2006
BY:

RECEIVED
DEC 05 2006
BY:

To:	BARTON MALOW	**From:**	**Bob Gallant**
Fax:	248-823-4672	**Pages:**	
Phone:		**Date:**	12/4/2006
Re:	RFI – BOULAN PARK	**CC:**	

☐ **Urgent** ☑ **For Review** ☐ **Please Comment** ☐ **Please Reply** ☐ **Please Recycle!**

RFI –BOULAN PARK

DWG M2.1 AND DWG 2.1A

DWG 2.1 SHOWS A 2" TAP OFF THE 4" CHWS/R ... DOES NOT SHOW WHERE IT GOES UP INTO UNIT 200

DWG 2.1A SHOWS A 3" TAP OFF THE 4" CHWS/R MAIN .....

THERE ALSO SHOWS A VALVE AND CS AFTER EACH TAP . ARE THEY IN THE PROPER LOCATION AND /OR ARE THEY REQUIRED ON MAIN....?

Phone: 248-373-5431 **FAX: 248-373-4175** **email: bgallant@heightsinc.com**

ALL OF THE BRANCH PIPING SHOWN ON DRAWINGS M2.1 AND M2.1A ARE EXISTING-TO-REMAIN TAPS OFF THE HS & HR MAINS. THERE ARE NO TAPS OFF THE CHS & CHR MAINS.

7643-12 CA RFI-02

Heights Heating & Cooling, Inc.

RFI #27

RECEIVED
DEC 04 2006

Fax

To:	BARTON MALOW	**From:**	**Bob Gallant**
Fax:	248-823-4672	**Pages:**	
Phone:		**Date:**	12/4/2006
Re:	RFI- BOULAND AND LARSON	**CC:**	

RECEIVED
DEC 05 2006
BY:

☐ **Urgent** ☐ **For Review** ☐ **Please Comment** ☐ **Please Reply** ☐ **Please Recycle**

DWG ME1.1 - SHOWS A DETAIL FOR THE HOT WATER REHEAT COIL .....

NOTE #1 - STATES THAT I AM TO REPIPE / RECONNECT EXISTING PIPING AND CONTROLS AND TO PROVIDE BALL VALVES AND FITTINGS AS NECESSARY.....

WHAT IS TO BE FOLLOWED, IF THE EXISTING SYSTEM IS NOT PIPED PER DETAIL?

Phone: 248-373-5431 **FAX: 248-373-4175** **email: bgallant@heightsinc.com**

THE DETAIL PROVIDES THE MINIMUM REQUIREMENTS FOR ALL REHEAT COIL RECONNECTIONS.

2643-12 CA Ms RFI-028

Heights Heating & Cooling, Inc.

RECEIVED
DEC 04 2006
BY:

RFI # 28

Fax

RECEIVED
DEC 05 2006
BY:

To: BARTON MALOW **From:** Bob Gallant

Fax: 248-823-4672 **Pages:**

Phone: **Date:** 12/4/2006

Re: RFI-BOULAN PARK / LARSON **CC:**

☐ Urgent ☐ For Review ☐ Please Comment ☐ Please Reply ☐ Please Recycle!

IS THERE ANY GLYCOL IN THE CHILLED WATER SYSTEM , IF SO WHAT PERCENTAGE?

Phone: 248-373-5431 FAX: 248-373-4175 email: bgallant@heightsinc.com

NO 0%

DEC 04 2006

RFA

RITTNER FRENCH ASSOCIATES
Rittner French Associates / Rittner Products, Inc.

RFI #29

MEMO 1 of 8

To: Leah Bossert, Barton Malow Company

From: Sabrina Kassab, Rittner French Associates

Date: November 30, 2006

Re: Middle Schools Addition - Troy Schools

Dear Mr. Leah Bossert,

The purpose of this letter is to ask permission to include the attached manufacturers as acceptable for the above project.

Approving the noted manufactures insures that you and your client receive the highest quality products in the world at the most competitive price.

Rittner French Associates is the industry's leading professional independent consultant and representative of Architectural Hardware, Security Products and Specialties.

I appreciate the excellent job you and your firm are doing to provide your client with the very finest building possible.

If you have any questions, please feel free to contact me at the numbers below.

Thank you for the time and effort you are investing in this project!

cc: Todd Haner, Kingscott

MAIN OFFICE:
150 Elizabeth Lane
P. O. Box 80301
Rochester, MI 48307

(800) RFA-4-SPEC
(248) 651-1333
Fax (248) 651-2650
E-Mail Approvals@Rittnerfrench.com

WEST MICHIGAN:
1651 W. Centre
Portage, MI 49024
(269) 323-3860

Advancement of
Construction Technology
The Construction Specifications Institute

SUBSTITUTION REQUEST FORM

PROJECT: Middle Schools Addition - Troy Schools

SPECIFIED ITEM: Hinges

Section: 08710 **Description:** Hinges

The undersigned requests consideration of the following:

PROPOSED SUBSTITUTION: STANLEY

The undersigned states that the following paragraphs, unless modified, are correct:

1. The undersigned will pay for changes to the building design, including engineering design, detailing and construction costs caused by the requested substitution.

2. The proposed substitution will have no adverse affect on other trades, the construction schedule, or specified warranty requirements.

3. Maintenance and service parts will be locally available for the proposed substitution.

The undersigned further states that the function, appearance and quality of the Proposed Substitution are equivalent or superior to the specified item.

Submitted by: [signature]

Signature
Name: ROLAND RITTNER
Firm: RITTNER FRENCH ASSOCIATES
Address: 150 ELIZABETH
ROCHESTER, MI 48307

Date: 11/30/2006

Fax: (248) 651-2650

For use by Design Consultant:
[x] Accepted [ ] Accepted as noted
[ ] Not Accepted [ ] Received too late

By: [signature]

Date: 12/4/06

Remarks:

Attachments:

Advancement of
Construction Technology
The Construction Specifications Institute

SUBSTITUTION REQUEST FORM

PROJECT: Middle Schools Addition - Troy Schools

SPECIFIED ITEM: Door Closers

Section: 08710 **Description:** Door Closers

The undersigned requests consideration of the following:

PROPOSED SUBSTITUTION: STANLEY

The undersigned states that the following paragraphs, unless modified, are correct:

1. The undersigned will pay for changes to the building design, including engineering design, detailing and construction costs caused by the requested substitution.

2. The proposed substitution will have no adverse affect on other trades, the construction schedule, or specified warranty requirements.

3. Maintenance and service parts will be locally available for the proposed substitution.

The undersigned further states that the function, appearance and quality of the Proposed Substitution are equivalent or superior to the specified item.

Submitted by: [signature]

Signature
Name: ROLAND RITTNER
Firm: RITTNER FRENCH ASSOCIATES
Address: 150 ELIZABETH
ROCHESTER, MI 48307

Date: 11/30/2006

Fax: (248) 651-2650

For use by Design Consultant:
☐ Accepted ☐ Accepted as noted
☑ Not Accepted ☐ Received too late

By: [signature]

Date: 12/4/06

Remarks: No sub Per TSO & Spec

Attachments:

Advancement of
Construction Technology
The Construction Specifications Institute

SUBSTITUTION REQUEST FORM

PROJECT: Middle Schools Addition - Troy Schools

SPECIFIED ITEM: Exit Devices

Section: 08710 **Description:** Exit Devices

The undersigned requests consideration of the following:

PROPOSED SUBSTITUTION: PRECISION

The undersigned states that the following paragraphs, unless modified, are correct:

1. The undersigned will pay for changes to the building design, including engineering design, detailing and construction costs caused by the requested substitution.

2. The proposed substitution will have no adverse affect on other trades, the construction schedule, or specified warranty requirements.

3. Maintenance and service parts will be locally available for the proposed substitution.

The undersigned further states that the function, appearance and quality of the Proposed Substitution are equivalent or superior to the specified item.

Submitted by: [signature]

Signature
Name: ROLAND RITTNER
Firm: RITTNER FRENCH ASSOCIATES
Address: 150 ELIZABETH
ROCHESTER, MI 48307

Date: 11/30/2006

Fax: (248) 651-2650

For use by Design Consultant:
☑ Accepted ☐ Accepted as noted
☐ Not Accepted ☐ Received too late

By: _____

Date: 12/4/06

Remarks: SPEC'D ITEM

Attachments:

Advancement of
Construction Technology
The Construction Specifications Institute

SUBSTITUTION REQUEST FORM

PROJECT: Middle Schools Addition - Troy Schools

SPECIFIED ITEM: Cylindrical Locksets

Section: 08710 **Description:** Cylindrical Locksets

The undersigned requests consideration of the following:

PROPOSED SUBSTITUTION: BEST

The undersigned states that the following paragraphs, unless modified, are correct:

1. The undersigned will pay for changes to the building design, including engineering design, detailing and construction costs caused by the requested substitution.

2. The proposed substitution will have no adverse affect on other trades, the construction schedule, or specified warranty requirements.

3. Maintenance and service parts will be locally available for the proposed substitution.

The undersigned further states that the function, appearance and quality of the Proposed Substitution are equivalent or superior to the specified item.

Submitted by: [signature]

Signature
Name: ROLAND RITTNER
Firm: RITTNER FRENCH ASSOCIATES
Address: 150 ELIZABETH
ROCHESTER, MI 48307

Date: 11/30/2006

Fax: (248) 651-2650

For use by Design Consultant:
☐ Accepted ☐ Accepted as noted
☑ Not Accepted ☐ Received too late

By: [signature]

Date: 12/4/06

Remarks: NO SUB PER TSD & SPEC

Attachments:

Advancement of
Construction Technology
The Construction Specifications Institute

SUBSTITUTION REQUEST FORM

PROJECT: Middle Schools Addition - Troy Schools

SPECIFIED ITEM: Cylinders & Keying

Section: 08710 **Description:** Cylinders & Keying

The undersigned requests consideration of the following:

PROPOSED SUBSTITUTION: BEST

The undersigned states that the following paragraphs, unless modified, are correct:

1. The undersigned will pay for changes to the building design, including engineering design, detailing and construction costs caused by the requested substitution.

2. The proposed substitution will have no adverse affect on other trades, the construction schedule, or specified warranty requirements.

3. Maintenance and service parts will be locally available for the proposed substitution.

The undersigned further states that the function, appearance and quality of the Proposed Substitution are equivalent or superior to the specified item.

Submitted by: [signature]

Signature
Name: ROLAND RITTNER
Firm: RITTNER FRENCH ASSOCIATES
Address: 150 ELIZABETH
ROCHESTER, MI 48307

Date: 11/30/2006

Fax: (248) 651-2650

For use by Design Consultant:
☐ Accepted ☐ Accepted as noted
☒ Not Accepted ☐ Received too late

By: [signature]

Date: 12/4/06

Remarks: No Sub [illegible]

Attachments:

Advancement of
Construction Technology
The Construction Specifications Institute

SUBSTITUTION REQUEST FORM

PROJECT: Middle Schools Addition - Troy Schools

SPECIFIED ITEM: Mortise Locksets

Section: 08710 **Description**: Mortise Locksets

The undersigned requests consideration of the following:

PROPOSED SUBSTITUTION: **BEST**

The undersigned states that the following paragraphs, unless modified, are correct:

1. The undersigned will pay for changes to the building design, including engineering design, detailing and construction costs caused by the requested substitution.

2. The proposed substitution will have no adverse affect on other trades, the construction schedule, or specified warranty requirements.

3. Maintenance and service parts will be locally available for the proposed substitution.

The undersigned further states that the function, appearance and quality of the Proposed Substitution are equivalent or superior to the specified item.

Submitted by: [signature]

Signature
Name: ROLAND RITTNER
Firm: RITTNER FRENCH ASSOCIATES
Address: 150 ELIZABETH
ROCHESTER, MI 48307

Date: 11/30/2006

Fax: (248) 651-2650

For use by Design Consultant:
☐ Accepted ☐ Accepted as noted
☑ Not Accepted ☐ Received too late

By: [signature]

Date: 11/4/06

Remarks: NO SUBS. PER TSD & SPEC

Attachments:

Advancement of
Construction Technology
The Construction Specifications Institute

SUBSTITUTION REQUEST FORM

PROJECT: Middle Schools Addition - Troy Schools

SPECIFIED ITEM: Continuous Geared Hinges

Section: 08710 **Description:** Continuous Geared Hinges

The undersigned requests consideration of the following:

PROPOSED SUBSTITUTION: STANLEY

The undersigned states that the following paragraphs, unless modified, are correct:

1. The undersigned will pay for changes to the building design, including engineering design, detailing and construction costs caused by the requested substitution.

2. The proposed substitution will have no adverse affect on other trades, the construction schedule, or specified warranty requirements.

3. Maintenance and service parts will be locally available for the proposed substitution.

The undersigned further states that the function, appearance and quality of the Proposed Substitution are equivalent or superior to the specified item.

Submitted by: [signature]

Signature
Name: ROLAND RITTNER
Firm: RITTNER FRENCH ASSOCIATES
Address: 150 ELIZABETH
ROCHESTER, MI 48307

Date: 11/30/2006

Fax: (248) 651-2650

For use by Design Consultant:
☑ Accepted ☐ Accepted as noted
☐ Not Accepted ☐ Received too late

By: [signature]

Date: 12/4/06

Remarks: _____

Attachments:

FAX: 734.699.8202 (2 pgs)
ATTN: MEL SMITH

Barton Malow Company

Troy School District

SUBSTITUTION REQUEST FORM

RFI #30

TO: **BARTON MALOW COMPANY/KINGSCOTT ASSOCIATES**
1301 Boyd
Troy, MI 48083
PH – 248-823-4631 FAX - 248-823-4672

DEC 05 2006

We hereby submit for your consideration the following product instead of the specified item for the above Project:

DRAWING NO.: **DRAWING NAME:**

SPEC. SECT.	SPEC. NAME	PARAGRAPH	SPECIFIED ITEM
08111	STD. STEEL DOORS & FRAMES	ALL	HOLLOW METAL DOORS & FRAMES

Proposed Substitution: DKS STEEL DOOR & FRAME SYSTEMS INC.

Attached complete information on changes to Drawings and/or Specifications which proposed substitution will require for its proper installation.

Submit with request all necessary samples and substantiating data to prove equal quality and performance to that which is specified. Clearly mark manufacturer's literature to indicate equality in performance.

CERTIFICATION OF EQUAL PERFORMANCE AND ASSUMPTION OF LIABILITY FOR EQUAL PERFORMANCE

The undersigned states that the function, appearance and quality are equivalent or superior to the specified item.

Submitted by:
MELVIN SMITH

Signature Title MANUFACTURERS REP.

Firm HARDWARE AGENTS LLC

Address 5212 NORTHLAND DR. NE SUITE 324
GRAND RAPIDS MI 49525

Telephone CELL: 248-866-6427 Date 11-29-06

Signature shall be by person having authority to legally bind his/her firm to the above terms. Failure to provide legally binding signature will result in retraction of approval.

Barton Malow Company

Troy School District

For use by Architect:	For Use by Owner:
____ Accepted ____ Accepted as Noted	____ Accepted ____ Accepted as Noted
✓ Not Accepted ____ Received Too Late	____ Not Accepted ____ Received Too Late
✓ Insufficient Data Received	____ Insufficient Data Received
By: [signature]	By: ____
Date: 11/5/06	Date: ____

Fill in Blanks Below: (Attach additional sheets as required)

A. Does the Substitution affect dimensions shown on Drawings?
Yes ____ No ✓ If yes, clearly indicate changes: ____

B. Will the undersigned pay for changes to the building design, including engineering and detailing costs caused by the requested substitution?
Yes ____ No ____ If no, fully explain: NOT APPLICABLE

C. What affect does substitution have on other contracts or other trades?
NONE

D. What affect does substitution have on the delivery and construction schedule? NONE

E. Manufacturer's warranties of the proposed and specified items are: ✓ Same ____ Different
If Different, explain on an Attachment

F. Reason for Request: TO OFFER COMPETITIVE BID

G. Itemized comparison of specified item(s) with the proposed substitution; list significant variations:
NONE

H. Accurate cost data comparing proposed substitution with product specified:
COMPETITIVE BID

I. This substitution will amount to a credit or an extra cost to the Owner of:
COMPETITIVE BID dollars
($____)

END OF SECTION 01630

FAX: 734.699.8202 (2pgs)
ATTN: MEL SMITH

Barton Malow Company

Troy School District

SUBSTITUTION REQUEST FORM

RFI #31

DEC 05 2006

TO: BARTON MALOW COMPANY/KINGSCOTT ASSOCIATES
1301 Royd
Troy, MI 48083
PH – 248-823-4631 FAX - 248-823-4672

We hereby submit for your consideration the following product instead of the specified item for the above Project:

DRAWING NO.: DRAWING NAME:

SPEC. SECT.	SPEC. NAME	PARAGRAPH	SPECIFIED ITEM
08710	DOOR HARDWARE	ITEM 2.3	HINGES

Proposed Substitution: PBB WORLD CLASS HINGES

Attached complete information on changes to Drawings and/or Specifications which proposed substitution will require for its proper installation.

Submit with request all necessary samples and substantiating data to prove equal quality and performance to that which is specified. Clearly mark manufacturer's literature to indicate equality in performance.

CERTIFICATION OF EQUAL PERFORMANCE AND ASSUMPTION OF LIABILITY FOR EQUAL PERFORMANCE

The undersigned states that the function, appearance and quality are equivalent or superior to the specified item.

Submitted by:
MELVIN SMITH

Signature Title MANUFACTURERS REP.

Firm HARDWARE AGENTS LLC

Address 5212 NORTHLAND DR. NE, SUITE 324
GRAND RAPIDS MI 49525

Telephone CELL: 248-866-6424 Date 11-29-06

Signature shall be by person having authority to legally bind his/her firm to the above terms. Failure to provide legally binding signature will result in retraction of approval.

Barton Malow Company

Troy School District

For use by Architect:	For Use by Owner:
✓ Accepted ___ Accepted as Noted	___ Accepted ___ Accepted as Noted
___ Not Accepted ___ Received Too Late	___ Not Accepted ___ Received Too Late
Insufficient Data Received	___ Insufficient Data Received
By: [signature]	By: ___
Date: 11/5/06	Date: ___

Fill in Blanks Below: (Attach additional sheets as required)

A. Does the Substitution affect dimensions shown on Drawings?
Yes ___ No ✓ If yes, clearly indicate changes: ___

B. Will the undersigned pay for changes to the building design, including engineering and detailing costs caused by the requested substitution?
Yes ___ No ___ If no, fully explain: NOT APPLICABLE

C. What affect does substitution have on other contracts or other trades?
NONE

D. What affect does substitution have on the delivery and construction schedule? NONE

E. Manufacturer's warranties of the proposed and specified items are: ✓ Same ___ Different
If Different, explain on an Attachment

F. Reason for Request: TO OFFER COMPETITIVE BID

G. Itemized comparison of specified item(s) with the proposed substitution; list significant variations:
NONE

H. Accurate cost data comparing proposed substitution with product specified:
COMPETITIVE BID

I. This substitution will amount to a credit or an extra cost to the Owner of:
COMPETITIVE BID dollars
($ ___)

END OF SECTION 01630

FAX: 734.699.8202 (2pgs)

Barton Malow Company

ATTN: Mel Smith

Troy School District

RECEIVED
DEC 05 2006

RFI #32

SUBSTITUTION REQUEST FORM

TO: **BARTON MALOW COMPANY/KINGSCOTT ASSOCIATES** BY:_____
1301 Boyd
Troy, MI 48083
PH – 248-823-4631 FAX - 248-823-4672

We hereby submit for your consideration the following product instead of the specified item for the above Project:

DRAWING NO.: **DRAWING NAME:**

SPEC. SECT.	SPEC. NAME	PARAGRAPH	SPECIFIED ITEM
10155	TOILET COMPTS.	ALL	PHENOLIC TOILET COMPTS.

Proposed Substitution: COLUMBIA PARTITIONS (ASSC)
* WE WILL BE OFFERING AN EQUIVALENT PRODUCT TO "SIERRA" BEGINNING THE 2ND QTR 2007

Attached complete information on changes to Drawings and/or Specifications which proposed substitution will require for its proper installation.

Submit with request all necessary samples and substantiating data to prove equal quality and performance to that which is specified. Clearly mark manufacturer's literature to indicate equality in performance.

CERTIFICATION OF EQUAL PERFORMANCE AND ASSUMPTION OF LIABILITY FOR EQUAL PERFORMANCE

The undersigned states that the function, appearance and quality are equivalent or superior to the specified item.

Submitted by: MELVIN SMITH

Signature _____ Title MANUFACTURERS REP.

Firm HARDWARE AGENTS LLC

Address 5212 NORTHCANA DR. NE SUITE 324
GRAND RAPIDS, MI 49525

Telephone CELL: 248-866-6424 Date 11-29-06

Signature shall be by person having authority to legally bind his/her firm to the above terms. Failure to provide legally binding signature will result in rejection of approval.

PRODUCT MUST BE AVAILABLE NOW W/ PRODUCT DATA & SAMPLES FOR TESTING & APPROVAL BY OWNER. THERE IS NO TIME FOR EVALUATION BEFORE 12/7/06 SCREENING.

Barton Malow Company

Troy School District

For use by Architect:	For Use by Owner:
___ Accepted ___ Accepted as Noted	___ Accepted ___ Accepted as Noted
✓ Not Accepted ___ Received Too Late	___ Not Accepted ___ Received Too Late
✓ Insufficient Data Received	___ Insufficient Data Received
By: [signature]	By:
Date: 11/6/06	Date:

Fill in Blanks Below: (Attach additional sheets as required)

A. Does the Substitution affect dimensions shown on Drawings?
Yes ___ No ✓ If yes, clearly indicate changes: _____

B. Will the undersigned pay for changes to the building design, including engineering and detailing costs caused by the requested substitution?
Yes ___ No ___ If no, fully explain: NOT APPLICABLE

C. What affect does substitution have on other contracts or other trades?
NONE

D. What affect does substitution have on the delivery and construction schedule? NONE

E. Manufacturer's warranties of the proposed and specified items are: ✓ Same ___ Different
If Different, explain on an Attachment

F. Reason for Request: TO OFFER COMPETITIVE BID

G. Itemized comparison of specified item(s) with the proposed substitution; list significant variations:
NONE

H. Accurate cost data comparing proposed substitution with product specified:
COMPETITIVE BID

I. This substitution will amount to a credit or an extra cost to the Owner of:
COMPETITIVE BID dollars
($)

END OF SECTION 01630

FAX: 734.699.8202 (6 pgs)

ATTN: Mel Smith

Barton Malow Company

Troy School District

RFI #33

SUBSTITUTION REQUEST FORM

RECEIVED
DEC 05 2006
BY:

TO: BARTON MALOW COMPANY/KINGSCOTT ASSOCIATES
1301 Boyd
Troy, MI 48083
PH – 248-823-4631 FAX - 248-823-4672

We hereby submit for your consideration the following product instead of the specified item for the above Project:

DRAWING NO.: DRAWING NAME:

SPEC. SECT.	SPEC. NAME	PARAGRAPH	SPECIFIED ITEM
10801	TOILET / BATH ACCESSORIES	ALL	TOILET ACCESSORIES

Proposed Substitution: AMERICAN ACCESSORIES INC.
(NOT TO BE CONFUSED WITH AMERICAN SPECIALTIES INC.)

Attached complete information on changes to Drawings and/or Specifications which proposed substitution will require for its proper installation.

Submit with request all necessary samples and substantiating data to prove equal quality and performance to that which is specified. Clearly mark manufacturer's literature to indicate equality in performance.

CERTIFICATION OF EQUAL PERFORMANCE AND ASSUMPTION OF LIABILITY FOR EQUAL PERFORMANCE

The undersigned states that the function, appearance and quality are equivalent or superior to the specified item.

Submitted by:

MELVIN SMITH

Signature Title MANUFACTURERS REP.

Firm HARDWARE AGENTS LLC

Address 5212 NORTHLAND DR. NE, SUITE 324
GRAND RAPIDS MI 49525

Telephone CELL: 248-866-6424 Date 11-29-06

Signature shall be by person having authority to legally bind his/her firm to the above terms. Failure to provide legally binding signature will result in retraction of approval.

Barton Malow Company

Troy School District

For use by Architect:	For Use by Owner:
✓ Accepted ___ Accepted as Noted	___ Accepted ___ Accepted as Noted
___ Not Accepted ___ Received Too Late	___ Not Accepted ___ Received Too Late
Insufficient Data Received	___ Insufficient Data Received
By: [signature] @ KDI	By:
Date: 11/5/06	Date:
Fill in Blanks Below: (Attach additional sheets as required)	

A. Does the Substitution affect dimensions shown on Drawings?
Yes ___ No ✓ If yes, clearly indicate changes: ___

B. Will the undersigned pay for changes to the building design, including engineering and detailing costs caused by the requested substitution?
Yes ___ No ___ If no, fully explain: NOT APPLICABLE

C. What affect does substitution have on other contracts or other trades?
NONE

D. What affect does substitution have on the delivery and construction schedule? NONE

E. Manufacturer's warranties of the proposed and specified items are: ✓ Same ___ Different
If Different, explain on an Attachment

F. Reason for Request: TO OFFER A COMPETITIVE BID

G. Itemized comparison of specified item(s) with the proposed substitution; list significant variations:
NONE

H. Accurate cost data comparing proposed substitution with product specified:
COMPETITIVE BID

I. This substitution will amount to a credit or an extra cost to the Owner of:
COMPETITIVE BID dollars
($ ___)

END OF SECTION 01630

ITEM 2.3-F (7A-05) BOBRICK B-165 24"x36"

FAX:

American Accessories, Inc.
Phone (877) 465-5005
Fax (877) 465-4090

California Series: CA-Mirror
Channel Framed Mirror

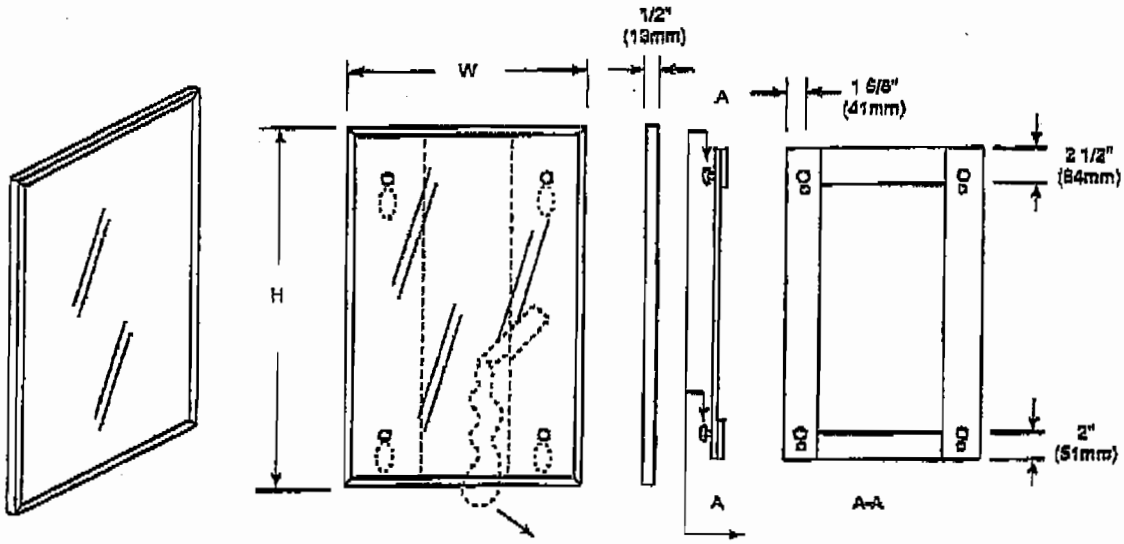

SPECIFICATIONS:

Frame - 9/16"(14mm) x 9/16"(14mm) x 9/16"(14mm) stainless steel, with a bright polished finish. One piece frame with 90 degree mitered corners.
Mirror - 1/4"(6mm) polished float plate No. 1 quality glass mirror, electrolytically copper-plated by galvanic process. Guaranteed against silver spoilage for 25 years.
Back plate - fabricated out of corrosive resistant galvanized steel with pre-punched mounting holes. Rolled lock formed on all four(4) sides.

INSTALLATION:

Mount wall plate, securing all four(4) corners. Center frame over wall plate, slide down to hook; check all four(4) corners. Pull nylon cord toward corner to lock. After final inspection, cut and remove cord. Minimum of 1"(25mm) clearance above mirror required for mounting. Bottom edge of reflective surface should not be mounted higher than 40"(1,015mm) above the finished floor. A single full length mirror is recommended for its universal use.

STANDARD FRAME SIZES: (wxh)

12"(305mm) x 18"(457mm)
16"(406mm) x 20"(508mm)
16"(406mm) x 22(559mm)
16"(406mm) x 24"(610mm)
16"(406mm) x 30(762mm)
24"(610mm) x 36"(914mm)
24"(610mm) x 60"(1,524mm)
18"(457mm) x 24"(610mm)
18"(457mm) x30"(762mm)
18"(457mm) x 36"(914mm)
20(508mm) x 60"(1,524mm)
24"(610mm) x 24"(610mm)
24"(610mm) x 30"(762mm)
24"(610mm) x 48"(1,219mm)
24"(610mm) x 72"(1,829mm)
30"(762mm) x 48"(1,219mm)

SPECIAL SIZES AVAILABLE:

Maximum size: 96"(2,438mm)W x 48"(1,219mm)H
Larger sizes in two or more complete units. Specify width and height in inches. Mirror widths and heights are overall sizes.

OPTIONS:

Tempered glass - specify suffix "T".
Polished stainless steel - specify suffix "SS".
Laminated glass - specify suffix "L"
Plastic - specify suffix "P".

Manufacturer reserves the right to make changes to design and dimensions without formal notice.

ITEM 2.3-G (TA-06) BOBRICK B-76717

American Accessories, Inc.
Phone (877) 465-5005
Fax (877) 465-4090

Oregon Series: OR-5153
Single Robe Hook

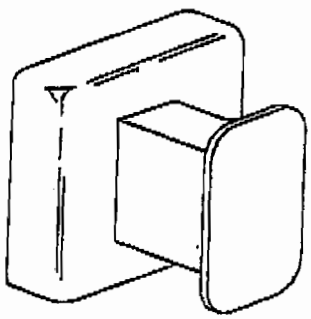

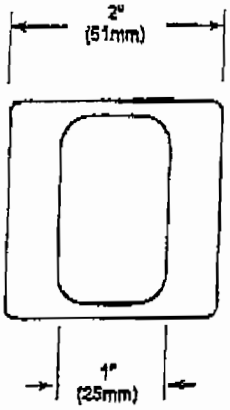

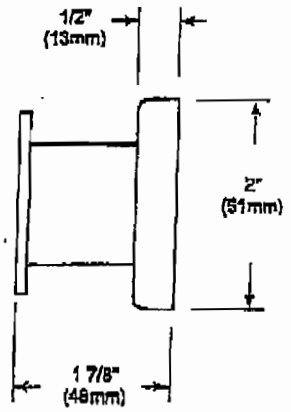

Detail of Concealed Mounting Bracket

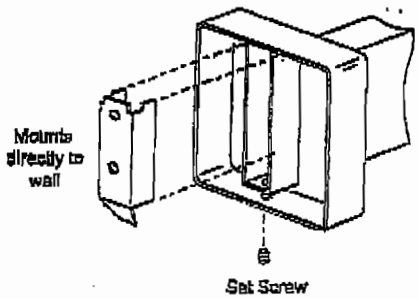

SPECIFICATIONS:

Unit is fabricated of 18-8 type 304 #4 satin finish. Flange and bracket are fabricated of 22 gauge and equipped with a concealed 18 gauge wall plate with a stainless steel set screw. Bracket hook is 12 gauge welded to the support arm. All welded construction.

INSTALLATION:

Mount wall plate on surface in vertical position with screws. Slip wall flange-hook assembly over wall plate and tighten set screw until secure.

OPTIONS:

Add "S" to model number for satin finish.
Add "B" to model number for bright finish.

Manufacturer reserves the right to make changes to design and dimensions without formal notice.

ITEM 2.3-H, I, J & N (TA-07 08 09 & 13)
-BOBRICK B-6806.99 - 36", 42", 48" & 24"

American Accessories, Inc.
Phone (877) 465-5005
Fax (877) 465-4090

Georgia Series: GA
Grab Bar - Straight Bar

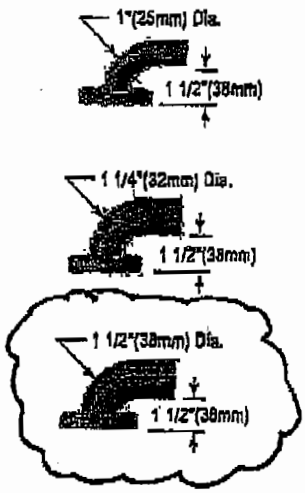

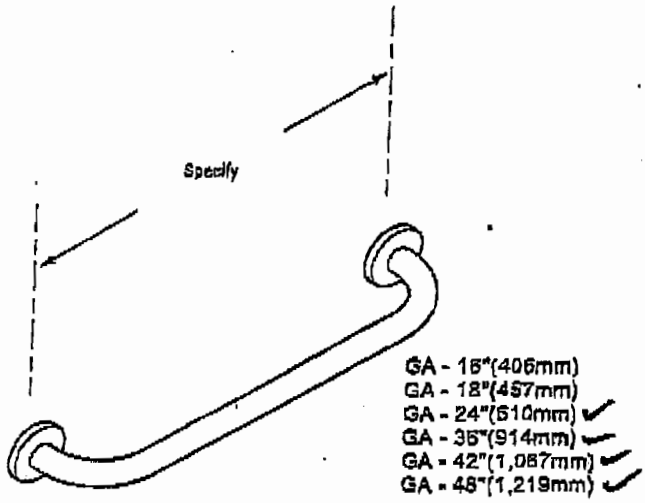

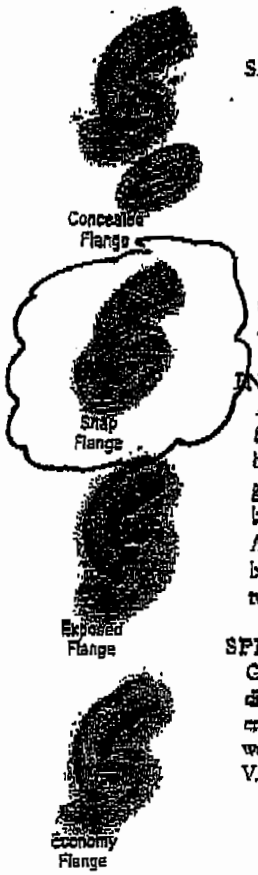

SPECIFICATIONS:

Unit fabricated of 18-8 type 304-18 gauge stainless steel tubing with #4 satin mill finish. Optional 260 alloy .050" (1.27mm) thickness solid bright brass.

For Exposed Flange specify "EF"; fabricated of 11 gauge type 304 stainless steel with #4 satin finish. Exposed flange mount is 3"(76mm) in diameter with three(3) countersunk mounting holes.

For Concealed Flange specify "CF"; fabricated of 11 gauge type 304 stainless with #4 satin finish. Concealed flange mount is 3"(76mm) in diameter with three(3) threaded set screws for mounting to back plate. Mounting back plate is fabricated of 11 gauge and is 2 7/8"(73mm) in diameter and secured to wall with two(2) mounting screws (not provided).

For Snap Flange specify "SF"; fabricated of type 304 stainless steel. Mounting back plate is fabricated of 12 gauge and is 3"(76mm) in diameter and heliarc welded to bar. Flange cover plate escutcheon is for esthetics only. Fabricated of 22 gauge type 304 stainless steel. All flanges and center posts are heliarc welded to the tubing forming an integral part.

INSTALLATION:

ADA mounting height required to meet codes is 33"(838mm) to 36"(914mm) from centerline of grab bar to the finished floor. Horizontal grab bar 42"(1,067mm) should be installed on side wall or partition stall. A 36"(914mm) horizontal grab bar is installed on back wall. Projection is the distance from the finished wall surface to the outside edge of the finished grab bar tubing. Clearance is the distance measured from the finished wall surface to the inner edge of the finished grab bar tubing. AAI furnishes the standard clearance to meet ADA 1 Ω" (38mm). Other clearances are available upon request. Add "PH" for toilet tissue holder. Builder shall provide concealed anchor or wall backing in accordance with local state building codes before wall is finished. Fasten bar's integral back mounting flange to anchoring device or wall backing with two(2) screws in each flange. Grab bars are no stronger than the anchor or wall to which they are attached.

SPECIFY:

Grab bars are available in 1"(25.4mm) specify "GA1", 1 1/4"(32mm) specify "GA2", and 1 Ω"(38mm) specify "GA3" diameters. For textured nonslip gripping surface specify "TR" suffix. Custom modified designs and radius can be engineered upon request. AAI's grab bars have been engineered and tested to withstand 1,300 pounds of downward pull weight when installed properly with in-wall mounting. AAI's grab bars meet and exceed all ADAAG, ICC/ANSI, FHA, VA, HUD, federal, state and local codes.

Manufacturer reserves the right to make changes to design and dimensions without formal notice.

ITEMS 2.3 K, L, & M BOBRICK B.6800.99 SERIES

American Accessories, Inc.
Phone (877) 465-5005
Fax (877) 465-4090

Georgia Series: GA-600S

Grab Bar

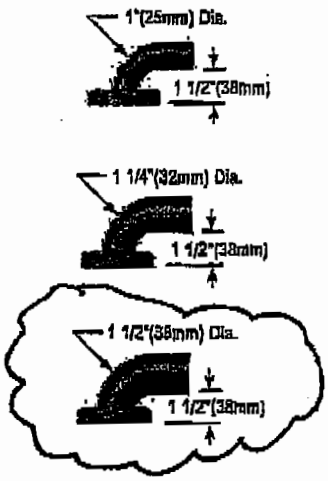

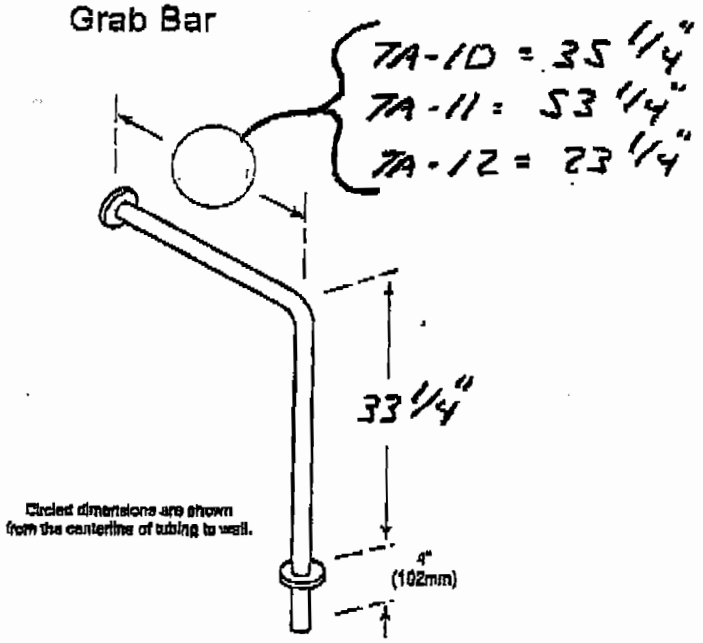


Concealed Flange

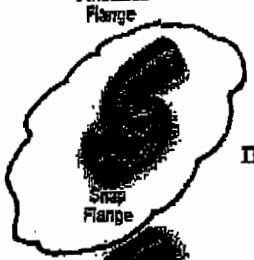
Snap Flange


Exposed Flange


Escutcheon Flange

SPECIFICATIONS:

Unit fabricated of 18-8 type 304-18 gauge stainless steel tubing with #4 satin mill finish. Optional 260 alloy .050" (1.27mm) thickness solid bright brass.

For Exposed Flange specify "EF"; fabricated of 11 gauge type 304 stainless steel with #4 satin finish. Exposed flange mount is 3"(76mm) in diameter with three(3) countersunk mounting holes.

For Concealed Flange specify "CF"; fabricated of 11 gauge type 304 stainless with #4 satin finish. Concealed flange mount is 3"(76mm) in diameter with three(3) threaded set screws for mounting to back plate. Mounting back plate is fabricated of 11 gauge and is 2 7/8"(73mm) in diameter and secured to wall with two(2) mounting screws (not provided).

For Snap Flange specify "SF"; fabricated of type 304 stainless steel. Mounting back plate is fabricated of 12 gauge and is 3"(76mm) in diameter and heliarc welded to bar. Flange cover plate escutcheon is for esthetics only. Fabricated of 22 gauge type 304 stainless steel. All flanges and center posts are heliarc welded to the tubing forming an integral part.

INSTALLATION:

ADA mounting height required to meet codes is 33"(838mm) to 36"(914mm) from centerline of grab bar to the finished floor. Horizontal grab bar 42"(1,067mm) should be installed on side wall or partition stall. A 36"(914mm) horizontal grab bar is installed on back wall. Projection is the distance from the finished wall surface to the outside edge of the finished grab bar tubing. Clearance is the distance measured from the finished wall surface to the inner edge of the finished grab bar tubing. AAI furnishes the standard clearance to meet ADA 1 Ω" (38mm). Other clearances are available upon request. Add "PH" for toilet tissue holder. Builder shall provide concealed anchor or wall backing in accordance with local state building codes before wall is finished. Fasten bar's integral back mounting flange to anchoring device or wall backing with two(2) screws in each flange. Grab bars are no stronger than the anchor or wall to which they are attached.

SPECIFY:

Grab bars are available in 1"(25.4mm) specify "GA1", 1 1/4"(32mm) specify "GA2", and 1 Ω"(38mm) specify "GA3" diameters. For textured nonslip gripping surface specify "TR" suffix. Custom modified designs and radius can be engineered upon request. AAI's grab bars have been engineered and tested to withstand 1,300 pounds of downward pull weight when installed properly with in-wall mounting. AAI's grab bars meet and exceed all ADAAG, ICC/ANSI, HFA, VA, HUD, federal, state and local codes.

Manufacturer reserves the right to make changes to design and dimensions without formal notice.

2643-12 CA: RFI: 03

Barton Malow Company
Barton Malow
Design/Construction Services

BARTON MALOW COMPANY
1301 Boyd
Troy, MI 48083
Phone: 248-823-4631
Fax: 248-823-4672

RECEIVED DEC 05 2006 BY:

RFI #34

Date: 12-05-06
To: Leah Bossert
1301 Boyd
Troy 48083
VIA Barton Malow Company

RFI #: #2
Contractor's Reference #: Smith Middle School
Project: Phase I - Three Middle Schools Remodeling & Addition
BMC Project #: 041049
A/E Project #: 2643-12
Bid Package #: 9361
Bid Category #:

From: Joe Hampton
Return to: Joe Hampton

Reference Specs: 08700 Reference Drawings: A6.1 Rev.

Request:
Please verify fire rating for the following Doors and Frames 204, 205, 206, 207, 208 & 209. Schedule calls for F.R.S. but there is no indication of same note.

Union Const. Services | Joe Hampton | 12-05-06
Contractor or Subcontractor | Submitted By | Date

Barton Malow Company | Reviewed By | Date

Reply: Attachments:
200, 201, 202, & 204-209 DRE NON-FIRE RATED. GLASS CAN BE ¼" TEMP.

This clarification is interpreted to be within the scope of referenced contracts issued in accordance with the Contract Documents, and without change in Contract Sum or Contract Time, and, as such, is not an authorization for work beyond the scope of the contract.

KINGSCOTT | Reply By | 11/5/06
Architect/Engineer | Date

RFI Response Posted on Drawings
Contractors Copied

2643-12CA PB RFI-035

Barton Malow Company
Barton Malow
Design/Construction Services

BARTON MALOW COMPANY
1301 Boyd
Troy, MI 48083
Phone: 248-823-4631
Fax: 248-823-4672

RECEIVED
DEC 05 2006
BY:

RFI #35

Date: 12-05-06
To: Leah Bossert
1301 Boyd
Troy 48083
VIA Barton Malow Company

From: Joe Hampton

RFI #: #3
Contractor's Reference #: Smith Middle School
Project Phase I - Three Middle Schools
Remodeling & Addition
BMC Project #: 041049
A/E Project #: 2643-12
Bid Package #: 9361
Bid Category #:
Return to: Joe Hampton

Reference Specs:
Reference Drawings: D1.1, D1.2, D1.3 & D1.4

Request:
Please verify if any of the aggregate panels need to be abated for asbestos. Notes 15, 16, 17 + 18

Union Const Services	Joe Hampton	12-05-06
Contractor or Subcontractor	Submitted By	Date
Barton Malow Company	Reviewed By	Date

Reply:
POSSIBLE, CHECK W/ CM
→ Pls. See attached email correspondence

Attachments:

This clarification is interpreted to be within the scope of referenced contracts issued in accordance with the Contract Documents, and without change in Contract Sum or Contract Time, and, as such, is not an authorization for work beyond the scope of the contract.

KINGSCOTT	[signature]	12/5/06
Architect/Engineer	Reply By	Date

RFI Response Posted on Drawings
Contractors Copied

Stahley, Kelly

From: Bossert, Leah
Sent: Tuesday, December 05, 2006 5:07 PM
To: Todd Haner
Cc: Miller, Kenneth; Stahley, Kelly
Subject: RE: RFI 35

Yes, abatement would be by owner. Please do list an alternate deduct and I'll send this as a reminder to Ken Miller to test the panels before June 1 so he could plan to abate if necessary prior to our starting work.

Leah S.Bossert
Project Manager, Barton Malow
Troy School District Team
1301 Boyd, Troy MI 48083
248-823-4631 ph
248-823-4672 fax

From: Todd Haner [mailto:thaner@kingscott.com]
Sent: Tuesday, December 05, 2006 4:17 PM
To: Bossert, Leah; Stahley, Kelly
Subject: RFI 35

Do we know if the aggregate panels have asbestos? Have any of the other aggregate panels on the elementary schools had asbestos? How do we want to handle this? Do we want to get a alt. deduct for the panel demo and have the abetment by the Owner if they have asbestos?

Todd Haner, AIA
Project Architect
Kingscott
229 East Michigan, Suite 335
Kalamazoo, MI 49007-6403
P: 269.381.4880 F: 269.381.9110
800.632.7815

FAX: 248-745-6734

RFI #316

0643 - 12 CA #5 RFI-036

Stahley, Kelly

From: Scott Farnell [sdfarnell@msn.com]
Sent: Tuesday, December 05, 2006 10:08 AM
To: Stahley, Kelly
Subject: Troy Middle School Renovation - Substitution Request

Attachments: FCIwoodmetal-Substitution-Kingscott -Troy 12-5-06.doc; PlasticLaminateSpecR41-27-06.pdf; WM Base Circa.pdf; WM Wall Circa.pdf; WM Case Circa.pdf

FCIwoodmetal-Substitution-King... | PlasticLaminateSpecR41-27-06.p... | WM Base Circa.pdf (179 KB) | WM Wall Circa.pdf (149 KB) | WM Case Circa.pdf (158 KB)

Kelly,
Attached please find substitution request letter and construction details for plastic laminate (Institutional) casework as manufactured by Wood Metal Industries. I have spoken with Alyssa Ditta regarding this request and she is expecting it.
Thank You,
Scott Farnell

Scott Farnell
Farnell Contracting, Inc
3355 Lahring Rd Linden, MI 48451
Main (248)745-8998 Cell (248)762-5013

Life tends to shape itself to our expectations

DEC 05 2006

APPROVED SUBJECT TO FULL COMPLIANCE W/ SPECIFICATIONS & DRAWINGS
THEKN 11/5/06

Farnell Contracting, Inc.

3355 Lahring Rd. Linden, MI 48451
(248) 745-8998 Fax (248) 745-6734

Barton Malow
ATT: Kelly Stahley
1301 Boyd
Troy, MI 48083

December 5, 2006

Re: Troy Middle Schools – Substitution for Section 12355 – Institutional Casework

Dear Kelly,

In following with a typical CSI specification section 1630-Substitutions please see the following information regarding the Plastic Laminate Casework for Troy Middle School renovations. I have reviewed the project specification and our casework by Wood-Metal Industries meets or exceeds the project specifications in every material respect. Currently we are supplying casework of this type for other Kingscott projects, including Gull Lake HS, and have done this work for Barton Malow on many other past projects.

1. Product data, including construction and fabrication data, is attached.
2. Any samples requested will be delivered in a timely fashion to the job site or to the office of Barton Malow or Kingscott Associates as directed.
3. A comparison of the differences and similarities for the Plastic Laminate casework with the specification will find compliance with the specification. Materials used in the cabinet construction, sizes are to be as specified, performance and durability of the products are as specified. Thicknesses of the woods we use are equal to all requirements of the specification.
4. There are no changes necessary to the plans or specifications for this substitution, other than manufacturer.
5. This substitution will not effect the proposed schedule.
6. There is no change in costs to Kingscott Associates or Barton Malow to accept this substitution.
7. The casework manufactured by Wood-Metal Industries is appropriate in every significant respect to that required by the contract documents and it will perform adequately in the application indicated. We waive our rights to additional payment for time to correct, in the case that the substitution fails to perform adequately.

Farnell Contracting has specific experience with the removal, relocation and reinstallation of existing casework on projects for Whitmore Lake Schools, Birmingham Schools and several other school districts with similar scopes. I will be in contact shortly to follow through with this material and to complete the approval process.

Sincerely,

Scott Farnell

SECTION 12324

PLASTIC-LAMINATE-FACED CASEWORK

PART 1 GENERAL

1.01 SUMMARY

A. Section includes plastic-laminate-faced casework; countertops; casework hardware; responsibility for utility connections; and service fittings and outlets.

B. Plumbing Contractor shall install all sinks, faucets, strainers, tailpieces, traps, bubblers, gas cocks and valves and trim furnished by the casework supplier; Plumbing Contractor shall provide all labor to interconnect these items and connect these items to building systems.

C. Electrical Contractor shall install electrical equipment (variable voltage panels, etc.) furnished by the casework supplier as specified. Electrical Contractor shall provide all labor to interconnect these items with the building systems. Electrical boxes, plates and wiring devices shall be provided by the electrical contractor. The casework contractor will provided the appropriate cut-outs as noted on the approved shop drawings.

D. HVAC Contractor shall install all mechanical devices furnished by the casework supplier as specified. HVAC Contractor shall provide all labor to interconnect these items to the building systems.

E. If fume hoods are included as part of the casework contract the fume hood motor / fan assemblies, ducting, dampers and control devices shall be provided by the HVAC or other designated contractor(s) per the mechanical specifications. Fan switches shall be provided by the casework contractor only if shown on approved shop drawings.

F. Calibration and balancing of fume hoods is the responsibility of the HVAC contractor.

G. Furnish and place appliances where noted on architectural drawings.

H. The HVAC, Plumbing and Electrical Contractors shall extend building utilities to and connect appliances.

I. Work shall be conducted in accordance with General Conditions, Supplementary Conditions, Division 1 and the requirements of this Section.

J. Related Sections:
   1. Section 07900 - Joint Sealers.
   2. Section 09650 - Resilient Flooring: Base material.
   3. Section 11600 - Laboratory Equipment.

1.02 REFERENCES

A. American National Standards Institute (ANSI).

B. Architectural Woodwork Institute (AWI): Architectural Woodwork Quality Standards Illustrated, latest edition.

C. National Electrical Manufacturers Association:
   1. NEMA LD 3 - High Pressure Decorative Laminates.

D. Composite Panel Association Buyer's & Specifier's Guide

1.03 DESIGN REQUIREMENTS

A. Manufacturers shall be members of AWI, have established quality control criteria

B. Casework shall meet or exceed load tests as outlined in ANSI A161.1.

C. Manufacturers shall comply, per architect's specification, with special requirements related to the Americans with Disabilities Act, 28 CFR Part 36, ADA Standards for Accessible Design.

D. Items shall suit space conditions and where equipment is intended to occupy fixed locations, the physical conditions, roughing-in, etc., of the building are to control the absolute sizes and arrangements.

E. Project Standard:
   1. Stock numbers of items of equipment, as indicated on Equipment Schedules, have been selected from one manufacturer's catalog for design purposes only.
   2. Items of equipment by approved manufacturers (other than the Project Standard) need not be identical to the items indicated, however, they must satisfy the same requirements, provide the same facilities (doors, drawers, etc.) and fulfill the same functions as the specified items.
   3. Where items of equipment by approved manufacturers (other than Project Standard) are not of the same lengths as the items indicated, adjust equipment layouts as follows:
      a. Where items of equipment are against the wall and confined by walls at both ends.
         1) Add a filler panel (not to exceed 4 inches wide), and/or
         2) Increase the length of one or more units, and/or
         3) Add an additional item of equipment.
      b. Where items of equipment are freestanding or are not confined by walls at both ends, adjust as above, except that overall length need only be approximate.
   4. Materials used by all manufacturers must meet the requirements of these specifications; it is understood that the manufacturers vary in joinery; these specifications describe the construction offered by the first-named manufacturer.
   5. It is intended that cabinet body components shall be secured by wood dowels and glue, but the use of concealed interlocking mechanical fasteners as approved by AWI 1600B-S-4.A especially designed for use with particle board shall be acceptable.
   6. Where items of equipment by approved manufacturers (other than the Project Standard) necessitate changes in mechanical or electrical services, said changes shall be the Contractor's responsibility and shall be coordinated and accomplished at no additional cost to the Owner.

1.04 SUBMITTALS

A. Section 01600 - Product Requirements: Submittal requirements.

B. Shop Drawings:
   1. Indicate casework locations, large scale plans, elevations, cross sections, rough-in and anchor placement dimensions, tolerances and clearances required.
   2. Include utility rough-in dimensions.

C. Product Data:
   1. Submit component dimensions, configurations, construction details, joint details, and attachments, utility and service requirements and locations.
   2. Include associated components, including grommets, sink, sink fittings, appliances, fume hoods and other indicated items.
   3. Include manufacturer's literature.

D. Samples (per architect's request):
   1. Plastic Laminates
   2. Edge banding
   3. Hinges
   4. Pulls
   5. Louvers.
   6. Grommets.

E. Sample Unit:
   1. When requested by the Architect, submit full-size cabinet, as herein specified.
   2. Submitted cabinets may be used in the Project.

F. Coordination Submittals:
   1. Copy same submittals to other trades and other Prime Contractors who have connecting or adjacent Work for coordination review and for locating their Work connected to or adjacent to the equipment specified herein.
   2. Distribute reviewed "Field Use" copies to all affected trades when casework manufacturer and affected Contractors have completed coordination necessary for complete installation.

G. Certification that the manufacturer's assembly has been tested per ANSI A161.1.

1.05 QUALITY ASSURANCE

A. Qualifications:
   1. Installer: Company specializing in performing Work of this Section with minimum five years experience approved by manufacturer.
   2. Manufacturer: Company specializing in manufacturing products specified in this Section with minimum five years experience.

B. Mockup (per architect's request):
   1. Section 01400 - Quality Requirements: Mockup requirements.
   2. Construct full size mockup including base and upper cabinet, complete with drawers, door, adjustable shelf and counter top.
   3. Locate where directed by Architect.
   4. Incorporate accepted mockup as part of Work.

1.06 DELIVERY, STORAGE AND HANDLING

A. Section 01600 - Product Requirements: Product warranties and product bonds.

B. Accept casework on site; inspect on arrival for damage.

C. Store and handle casework in manner to prevent damage and deterioration.

D. Provide packaging such as cardboard or other containers, separators, banding, spreaders and paper wrappings to protect metal items.

E. Store casework in a protected dry area, provided by the owner, away from direct sunlight, with temperature 70 degrees F (+/- 10) and relative humidity of 25 – 50%. Casework shall be stored elevated above moisture contact. Storage area must be isolated from outside weather conditions. Casework shall be installed only in areas where temperature and humidity are maintained within the above-stated range. Storage and installations in conditions other than those stated above will void all product warranties.

F. All cabinets to be complete with hardware attached (or provided loose where not practical to ship attached) with all necessary scribes, fillers and molding; all items to be marked for identification.

G. Loose heating, plumbing and electrical items to be marked for exact installation location.

H. Protect exposed finish surfaces by suitable means.

I. Coordinate size of access and route to place of installation.

1.07 SEQUENCING AND SCHEDULING

A. Coordinate casework installation with size, location and installation of service utilities.

B. Sequence installation to accommodate required utility connections.

1.08 WARRANTY

A. The entire installation shall be guaranteed by the casework manufacturer for a period of one year from date of acceptance, in addition to the Contractor's guarantee, against defects in materials and workmanship.

B. Warranty shall cover the replacement, without cost to the Owner, of any and all items that shall become defective within the above-stated time.

PART 2 PRODUCTS

2.01 MANUFACTURERS

A. Project Standard:
1. Drawings and specifications for casework and equipment are based upon plastic laminate institutional casework as manufactured by Wood-Metal Industries, a division of Wood-Mode, Inc., 100 East Sherman Street, Selinsgrove, PA 17870, (570)374-1176.
2. The specifications outline minimum material and construction standards; only products meeting or exceeding this minimum standard shall be acceptable.
3. The receiving of a bid does not necessarily indicate the manufacturer's standard cabinetry is acceptable.
4. Contractor is required to revise their standard cabinetry to meet the product standards specified.

B. Acceptable Alternative Manufacturers (prior to bidding):
1. Trimline Series Modified
TMI Systems Design Corporation
50 South Third Avenue West
Dickinson, ND 58601-5595
(701) 225-6716 or (800) 456-6716
2. LSI Modified
L.S.I. Corporation of America, Inc.
2100 Xenium Lane
Minneapolis, Minnesota 55441.

C. The design shall be in accordance with the Drawings for each item, complete with all required fillers, trim strips, backs, etc.

D. The equipment of the following specifications shall be the heavier, more substantial grade of equipment generally referred to as Institutional Grade, as compared to the lighter commercial grades which will not comply with these specifications and will not be acceptable.

E. Colors for casework and counter tops shall be as selected by the Architect and shall not be limited in number of colors; Architect reserves the right to select any color offered by Wilsonart or Formica.

2.02 COMPONENTS

A. Cabinet Surfaces:
1. All exposed exterior cabinet surfaces shall be surfaced with a high pressure plastic laminate 0.028 inch (0.71mm) in thickness (GP28), meeting current NEMA standards for vertical grade.
2. Interior surfaces (concealed surfaces) and underside of wall cabinets shall be neutral in color and shall be thermally fused melamine laminate meeting current NEMA standards.
3. Units without doors and with glazed or glass doors to receive same interior as exterior.

B. Edges:
1. Cabinet body leading edges shall be flat edge 0.020 inch PVC, machine applied with hot melt adhesive.
2. Doors and drawer edges shall be 3mm PVC, machine applied with hot melt adhesive, inside/outside length radiused, corner radiused and buffed.

C. Drawer bodies shall be constructed of ½" thick solid oak with dovetail joints. Laminate drawer boxes with doweled construction shall not be considered equal.

D. Lamination with natural hybrid P.V.A. Type III water resistant adhesives that cure through chemical reaction, containing no health or environmentally hazardous ingredients, are required; "contact" methods of laminating are not allowed.

E. Substrate for Laminated Surfaces:
1. Particleboard:
a. Particleboard to be industrial grade, with a minimum density range of 45 to 50 pounds per cubic foot, balanced 3 ply construction and shall conform to ANSI A208.1-1993, Type M-3.

2.03 COUNTER TOPS

A. Laminate Counter Tops:
1. Decorative surface to be PF42 or GP 50 high pressure plastic laminate which meets or exceeds performance standards set by National Electrical Manufacturers Association (NEMA LD3-2000), as amended, for Class 1 applied with water resistant glue over 1 inch thick particleboard.
2. Underside shall be properly balanced with heavy gauge backing sheet.
3. Provide tops in as long as practical continuous lengths.
4. Provide field glued splines and mechanical fasteners at joints.
5. The backsplash shall not be the post-formed cove type.
6. Backsplashes will be mechanically fastened.
7. Backsplash bottom and corner joints will be continuously sealed with silicone sealant.
8. Factory applied tops on mobile cabinets and other specialty cabinets shall be ¾" thick particleboard with plastic laminate top surface and balanced with phenolic backer sheet or equivalent. All edges to have PVC edge band (selected from manufacturer's standard color offering) applied with hot melt adhesive.

B. Molded Epoxy Resin Tops:

1. Molded epoxy resin tops shall be molded from a modified epoxy resin that has been especially compounded and cured to provide the optimum physical and chemical resistance properties required of a heavy-duty laboratory table top.
2. Tops and curbs shall be a uniform mixture throughout their full thickness, and shall not depend upon a surface coating that is readily removed by chemical and/or physical abuse.
3. Tops and curbs shall be non-glaring and black in color. Table tops shall be 1 inch thick, unless otherwise shown on the Drawings, with drip grooves provided on the underside at all exposed edges.
4. Further, all exposed edges except as indicated below, shall be eased at front top edge and at vertical corners.
5. 4" curbs shall be the same thickness as the tops, bonded to the surface of the top to form a square joint.
6. Provide drop-in sinks.
   a. Sink cutouts shall be machined to accommodate sink lips.

C. Stainless Steel:
   1. Equipment herein specified, when constructed of more than one piece and/or sheet of metal, shall be continuously butt-welded, ground and polished smooth; field joints shall be as few as possible.
   2. Welded parts shall be homogeneous, non-porous, free from pits, cracks, imperfections or discolorations.
   3. Welding shall be electric process, with joints ground and polished smooth.
   4. The welding rods used shall be of the same composition as sheets of parts welded.
   5. Counter Tops:
      a. Counter tops and like items, unless otherwise specified, shall be Type 304 with number 4 finish.
      b. Tops shall be reinforced on bottom side with hat channels and coated with sound deadening material.
      c. Field joints in tops shall be bolted where tops exceed length of available sheets and/or where building access does not permit the top to be brought into the building in one piece.
   6. Backsplashes:
      a. Form on three sides of, and integral with, counter top of 14 gauge stainless steel with corners formed with a 3/4 inch radius, both horizontal and vertical.
      b. Provide 3/4 inch return down backside.
      c. Close ends of side splashes with 3/4 inch radius.
   7. Integral Sinks:
      a. Sinks shall be constructed of 14 gauge stainless steel with corners formed with a 3/4 inch radius, both horizontal and vertical; sink sizes established on the drawings to be inside measurements.
      b. Partitions between sink compartments shall be double walled with 3/4 inch radius corners, 3/4 inch radius top edges, welded in place, ground smooth and polished.
      c. Fronts, bottoms and back of multiple compartment sinks shall be one piece with no overlapping joints or open crevices.
      d. Bottom of each compartment shall be molded at drain opening at center.
      e. Where sinks occur in counter tops, they shall be entirely welded to the countertops with welds ground smooth and polished, with no trace of welding left, to give the appearance of one continuous piece.
      f. Counter tops are to have a stainless steel backsplash 4 inches high.
      g. Provide appropriate number of holes for specified faucets and drains.

D. Hard Wood Tops:
   1. Wood tops shall be 1-1/4" minimum thickness and shall be built up of maple strips laminated together with a durable finish.

2.04 HARDWARE COMPONENTS

A. Hinges:
   1. Hinges for base cabinets, wall cabinets and tall casework doors shall be of the full wrap-around, five knuckle pin, heavy-duty institutional type with hospital tip and rounded ends, 2-3/4 inches high x 0.095 inch nominal thickness, 270 degree swing, of tempered steel.
   2. Hinges shall be finished in color selected from manufacturer's standard colors.
   3. Offset kitchen cabinet type, plain butt hinges with removable pins will not be acceptable.
   4. All hinge screws shall be concealed when door is closed.
   5. Doors under 48 inches high shall have two hinges and those over 48 inches high shall have three hinges.

B. Pulls shall be satin aluminum bent wire style, 4" on center.

C. Adjustable shelf supports to be twin pin design with anti-tip up shelf restraints for both 3/4 inch and 1 inch thick shelves, and provide slot to mechanically fasten shelf to clip; load rating minimum of 300 pounds per support.

D. Locks:
   1. Locks to be removable core, five-disc tumbler type. Cabinets to be keyed alike per room, each room keyed differently and master keyed, unless noted otherwise on drawings.
   2. Provide two keys per lock.
   3. A maximum of six master keys shall be provided when requested.

2.05 MISCELLANEOUS COMPONENTS

A. Louvers and Grilles:
   1. Provide manufacturers standard louvers or grilles on doors where specified.
   2. Louvers are to be provided on each side of cabinet door opening to create a sealed uniform finish, where louvers are indicated on drawings: punched metal louvers with exposed sharp edges will not be permitted.

B. Tote trays shall be tan-colored high-impact poly styrene with aluminum card holder.

C. Grommets: Provide grommets with covers at locations shown on drawings.

2.06 PLUMBING FIXTURES

A. Stainless Steel Sinks and Miscellaneous Fittings:
   1. Project Standard: Sinks and fittings are based upon products manufactured by Just Manufacturing Company, 9233 King Street, Franklin Park, Illinois 60131.
   2. The specifications outline minimum material and construction standards.
   3. Only products meeting or exceeding this minimum standard shall be acceptable.
   4. The receiving of a bid does not necessarily indicate the manufacturer's standard product is acceptable.
   5. Acceptable Alternative Manufacturer:
      a. Elkay Manufacturing Company
         2222 Camden Court
         Oak Brook, IL 60521
         (708) 574-8484

B. Epoxy Resin Sinks and Miscellaneous Fittings:
   1. Project Standard: Sinks and fittings are based upon products manufactured by The Durcon Company, Inc., 1255 South Mill Street, Plymouth, Michigan 48170.
   2. The specifications outline minimum material and construction standards.
   3. Only products meeting or exceeding this minimum standard shall be acceptable.

4. The receiving of a bid does not necessarily indicate the manufacturer's standard product is acceptable.
5. Acceptable Alternative Manufacturer:
   a. Epoxyn Products.
      P.O. Box 232, 206 Allison Drive
      Taylor, TX 76574
      (512) 352-5591

C. Faucets and Fixtures:
1. Project Standard: Faucets and fixtures are based upon products manufactured by Chicago Faucet Company, 2100 Clearwater Drive, Des Plaines, Illinois 60018.
2. The specifications outline minimum material and construction standards.
3. Only products meeting or exceeding this minimum standard shall be acceptable.
4. The receiving of a bid does not necessarily indicate the manufacturer's standard fixtures shall be acceptable.
5. Acceptable Alternative Manufacturers (prior to bidding):
   a. WaterSaver Faucet Company
      701 West Erie Street
      Chicago, IL 60610
      (312) 666-5500
   b. Wolverine Brass Company
      2951 Highway 501 East
      Conway, SC 29526
      (800) 944-9292
   c. Chicago Faucet Company
      2100 Clearwater Drive
      Des Plaines, IL 60018
      (847)803-5000

D. Fume Hoods:
1. Project Standard: Fume hoods are based upon products manufactured by Air Master Systems Corporation, 6480 North Center Drive, Muskegon, Michigan 49441.
2. The specifications outline minimum material and construction standards.
3. Only products meeting or exceeding this minimum standard shall be acceptable.
4. The receiving of a bid does not necessarily indicate the manufacturer's standard fixtures shall be acceptable.
5. Acceptable Alternative Manufacturers:
   a. Labconco Corporation
      8811 Prospect Avenue
      Kansas City, MO 64132
      (800) 821-5525
   b. BMC
      2835 Maffett St.
      Muskegon, MI 49444
      (231)-733-1206
   c. Iroquois
      2176 E. Laketon Ave.
      Muskegon, MI
      49442
      (800)-206-0099

2.07 FABRICATION

A. Base Cabinets:
1. Non-exposed surfaces shall be faced with thermally fused melamine laminate.
2. Exposed surfaces shall be surfaced with high pressure plastic laminate.

3. Sub tops and bottoms shall be 3/4" thick, edged with 0.020" PVC on front.
4. Backs to be ½" thick, trapped in sides and sealed with hot-melt adhesive.
5. Side panels to be ¾" thick, edged with 0.020" PVC on front edge.
6. External hanger rails, ¾" thick and a minimum of 3" high, shall be mechanically fastened to sub top, bottom and both sides.
7. Sub bases to be separate (no cabinet body sides-to-floor), water-resistant plywood with concealed fastening to cabinet bottom.

B. Wall Cabinets:
1. Non-exposed surfaces shall be faced with thermally fused melamine laminate.
2. Exposed surfaces shall be surfaced with high pressure plastic laminate.
3. Tops and bottoms shall be 1" thick, edged with 0.020" PVC on front.
4. Backs to be ½" thick, trapped in sides and bottoms and sealed with hot-melt adhesive.
5. Side panels to be ¾" thick, edged with 0.020" PVC on top, bottom and front.
6. External hanger rails, ¾" thick and a minimum of 3" high, shall be mechanically fastened to top, bottom and both sides of wall cabinets. Rails shall be located at top and bottom of cabinets.

C. Tall Casework:
1. Non-exposed surfaces shall be faced with thermally fused melamine laminate.
2. Exposed surfaces shall be surfaced with high pressure plastic laminate.
3. Tops shall be 1" thick, edged with 0.020" PVC on front.
4. Bottoms and side panels shall be ¾" thick edged with 0.020" PVC on front.
5. Backs to be 1/2" thick, trapped in sides and sealed with hot-melt adhesive.
6. External hanger rails, ¾" thick and a minimum of 3" high, shall be mechanically fastened to top, bottom and both sides of tall cabinets. Rails shall be located at top and bottom of cabinets.

D. Sink Cabinets:
1. Sink cabinets shall be constructed with vertical head rails at front and rear of cabinets in lieu of full sub tops.
2. Removable backs shall be provided for all sink cabinets.

E. Tops, bottoms, sub tops, intermediate rails and fixed shelves to be glued and doweled to cabinet sides. Cabinets shall be case clamped under pressure to insure joint integrity and unit squareness.

F. Cabinet Backs:
1. Exposed exterior backs to be 3/4 inch thick particleboard faced with high pressure plastic laminate.
2. Removable backs, where specified, shall be attached to cleats secured to the cabinet sides and bottoms. Back panels shall be secured in place with pan head screws.

G. Drawers:
1. Drawer sides, back and front shall be, 1/2 inch thick solid oak. Top edges shall be radiused and free of rough edges.
2. Drawer boxes shall be assembled with glued dovetail construction at all four corners.
3. Drawer bottoms shall be 1/4 inch thick hardboard with finished surface of wear-resistant oak reversed-grain vinyl and trapped in grooved drawer box.
4. Underside of drawer to be sealed with a continuous bead of hot melt adhesive to enhance drawer integrity.
5. Reinforce drawer bottoms with a hardwood front-to-back intermediate underbody stiffener, hot melt glued and fastened; one above 24 inches and two at 42 inches and wider.
6. Separate plastic laminate drawer fronts shall be applied to completed drawer box assemblies.
7. Drawer Slides - Standard Drawers:

a. Single-extension, bottom-mounted, epoxy powder coated with positive in-stop, out-stop and out-keeper, lift-out disconnect, stay-closed design.
b. Captive nylon rollers, both front and rear.
c. 100 pound load rating.
d. Slide shall have a manufacturer's lifetime warranty.

8. Drawer Slides – File / Paper Storage Drawers:
   a. Full extension, three part progressive opening slide, 100 pound load rating, zinc plated or epoxy coated at manufacturer's option.
   b. Provide clip and rail hanging file system for legal or letter size as indicated by manufacturer's model number.

H. Door and Drawer Fronts:
1. Hinged and sliding doors and drawer fronts shall be 3/4 inch thick particleboard faced on both sides with high pressure plastic laminate. Drawer fronts and hinged doors are to overlay the cabinet body, maintaining a consistent reveal between doors and drawers.
2. Edging shall be 3mm PVC applied with hot-melt adhesive.
3. Sliding doors shall have a composite bottom track and top guide. Rollers shall be routed into bottom of door. Doors over 48" in height shall have an overhead aluminum track and bottom guide.
4. Framed doors, for glazed panels or tack board inserts, shall have 3/4" thick hardwood frames faced on both sides with high pressure plastic laminate. Glazed panels shall be ¼" thick tempered safety glass.
5. Sliding glass doors shall be ¼" thick tempered safety glass, fitted into top and bottom aluminum tracks. Bottom tracks shall have rollers for smooth operation.

I. Adjustable Shelves
1. Non-exposed shelves shall be faced on both surfaces with thermally fused melamine laminate. Exposed shelves shall be faced on both surfaces with high pressure plastic laminate.
2. Shelf thickness shall be 1".
3. Shelves shall be full depth and adjustable on 32mm (1-1/4") increments.
4. Front edge of shelves shall be finished with 0.020" thick PVC, applied with hot melt adhesive.

J. Fixed Shelves:
1. Non-exposed shelves shall be faced on both surfaces with thermally fused melamine laminate. Exposed shelves shall be faced on both surfaces with high pressure plastic laminate.
2. Non-exposed shelf thickness shall be 3/4". Exposed shelves shall be 1" thick.
3. Shelves shall be full depth and doweled to cabinet sides.
4. Front edges of shelves shall be finished with 0.020" thick PVC, applied with hot melt adhesive.

2.08 COLORS

A. Selected by Architect as provided by these specifications (in particular Paragraph 2.01.E).

PART 3 EXECUTION

3.01 EXAMINATION

A. Verify adequacy of support framing, substrates and anchors.

B. No Work shall be installed until corrections to substrates have been performed by the trades involved.

3.02 INSTALLATION

A. Install casework, components and accessories under manufacturer representative's supervision whenever possible, using skilled labor especially trained for this work. Cabinets are to be installed in a professional and industry-accepted manner, including all scribes, moldings and necessary trim, complete and in operating condition according to outlined plans and specifications.

B. Set casework items plumb and square, securely anchored to building structure.

C. Furnish casework complete with trim strips, fillers, backs, etc., as may be required; all cutouts required for trim, sinks, etc., shall be made by the casework supplier.

D. Unless noted otherwise, furnish all sinks, faucets, bubblers, baskets, tailpieces, traps with clean out, gas cocks, escutcheons and interconnecting supply piping and waste piping to point of final connection for installation and hook-up by Plumbing Contractor.

E. Fume hoods and exhaust booths shall be pre-plumbed and pre-wired.

F. Exhaust fans and motors will be provided by the HVAC Contractor.

G. Field touch-up blemishes to original finish as approved and accepted by the Architect.

H. Discard or remove and replace damaged members.

3.03 ADJUSTING

A. Adjust doors, drawers, hardware, fixtures, and other moving or operating parts to function smoothly.

3.04 CLEANING

A. Section 01740 - Cleaning: Final cleaning.

B. All packaging material and installation-related debris shall be placed in an owner-provided dumpster on the construction site. The work area shall be left broom clean.

C. Installer shall remove all pencil marks, adhesive and sawdust resulting from this work.

D. Plastic laminate casework shall be cleaned inside and out following procedure recommended by the manufacturer.

E. Clean counters, shelves, glass, legs, hardware, fittings and fixtures.

3.05 PROTECTION OF INSTALLED CONSTRUCTION

A. Do not permit finished casework to be exposed to continued construction activity.

END OF SECTION

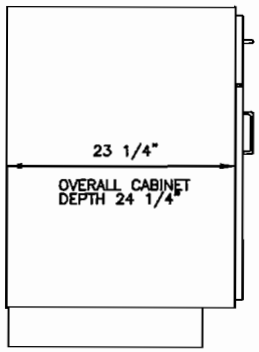

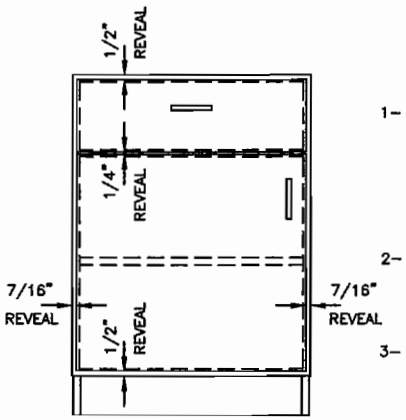

END VIEW

FRONT VIEW

STANDARD WIDTHS 12" THRU 48" ON 3" INCREMENTS
STANDARD HEIGHTS 25 3/4" 29"-32 3/4"-34 1/2"
STANDARD DEPTH 23 1/4"

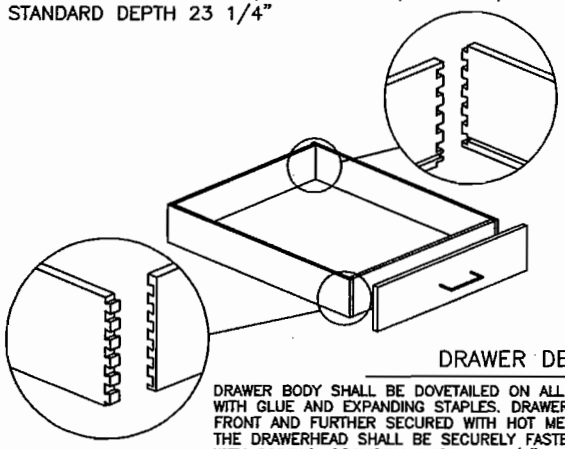

DRAWER DETAIL

DRAWER BODY SHALL BE DOVETAILED ON ALL FOUR CORNERS AND FURTHER SECURED WITH GLUE AND EXPANDING STAPLES. DRAWER BOTTOM IS LET INTO SIDES, BACK & FRONT AND FURTHER SECURED WITH HOT MELT ON UNDER SIDE OF BOTTOM. THE DRAWERHEAD SHALL BE SECURELY FASTENED TO THE DRAWER BODY WITH SCREWS, PROVIDING A FULL 1 1/4" THICK DRAWER FRONT.

PARTS LISTING

1- CABINET SIDES 3/4" THICK CONSISTING OF A PARTICLEB'D. CORE WITH A 1/32" VERTICAL SURFACE GRADE HIGH PRESSURE LAMINATE ON EXPOSED SIDE AND CABINET LINER ON INTERIOR SIDE, WHITE IN COLOR. FRONT EDGE TO RECEIVE .020 PVC EDGING. COLOR TO BE SELECTED FROM MANUFACTURES STANDARD COLOR SELECTIONS.

WHEN CABINET SIDES ARE CONCEALED A THERMALLY FUSED MELAMINE LAMINATE WHITE IN COLOR WILL BE PROVIDED.

2- TOP & BOTTOM 3/4" THICK CONSISTING OF A PARTICLEBOARD CORE WITH A THERMALLY FUSED MELAMINE LAMINATE TWO SIDES WHITE IN COLOR, FRONT EDGE TO RECEIVE .020 PVC EDGING, COLOR TO BE SELECTED FROM MANUFACTURES STANDARD COLOR SELECTIONS.

3- INTERMEDIATE RAIL 3/4" THICK X 4" WIDE CONSISTING OF A PARTICLEBOARD CORE WITH A THERMALLY FUSED MELAMINE LAMINATE TWO SIDES WHITE IN COLOR, FRONT EDGE TO RECEIVE .020 PVC EDGING COLOR TO BE SELECTED FROM MANUFACTURES STANDARD COLOR SELECTIONS.

4- DRAWER BODY 1/2" THICK SOLID OAK WITH 1/4" THICK WOOD GRAIN VINYL ON HARDBOARD BOTTOM.

5- BACK 1/2" THICK CONSISTING OF A PARTICLEBOARD CORE WITH A THERMALLY FUSED MELAMINE LAMINATE TWO SIDES WHITE IN COLOR.

6- EXTERIOR SUPPORT RAILS 3/4" X 4" MELAMINE.

7- 3/4" THICK X 4" HIGH SEPERATE BASE FABRICATED FROM EXTERIOR GRADE PLYWOOD.

8- ADJUSTABLE SHELF 1" THICK CONSISTING OF A PARTICLEBOARD CORE WITH A THERMALLY FUSED MELAMINE LAMINATE TWO SIDES WHITE IN COLOR, FRONT EDGE TO RECEIVE .020 PVC EDGING, COLOR TO MATCH SHELVES.

9- DRAWERHEAD (SEE DOOR DESCRIPTION)

10- DOORS 3/4" THICK TO RECEIVE 1/32" VERTICAL SURFACE GRADE HIGH PRESSURE LAMINATE ON EXPOSED SIDE & CABINET LINER ON INTERIOR SIDE, WHITE IN COLOR, EDGES TO RECEIVE 3mm EDGING COLOR TO BE SELECTED FROM MANUFACTURES STANDARD COLOR SELECTIONS.

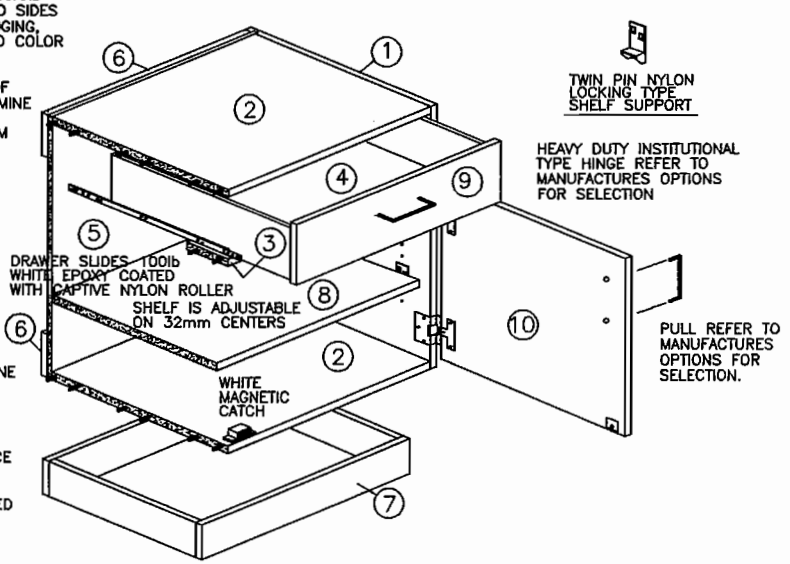

PARTIAL CONSTRUCTION DETAIL

TOP, BOTTOM & INTERMEDIATE RAIL TO BE JOINED TO CABINET SIDES WITH 8mm FLUTED HARDWOOD DOWELS & GLUE, EXTERIOR SUPPORT RAILS TO BE JOINED TO CABINET SIDES WITH POCKET SCREWS & ADDITIONALLY SCREWED TO TOP & BOTTOM, BACK IS PINNED & HOT MELTED TO CABINET SIDES & EXTERIOR SUPPORT BLOCKING. UNIT IS ELECTRONICALLY PRESSED TO ENSURE JOINT INTEGRITY & UNIT SQUARENESS.

- ALL MELAMINE LAMINATES ARE THERMAL FUSED TO A HIGH DENISTY INDUSTRIAL GRADE PARTICLEBOARD
- ALL HIGH PRESSURE LAMINATES ARE BONDED TO A HIGH DENISTY INDUSTRIAL GRADE PARTICLEBOARD
- EXPOSED EXTERIOR LAMINATES ARE AVAILABLE IN MOST STANDARD FORMICA OR WILSONART BRAND LAMINATES, CONTACT FACTORY FOR LATEST COLORS, WOOD GRAINS & PATTERNS AVAILABLE.
- EXPOSED EXTERIOR PVC AND 3mm EDGINGS ARE AVAILABLE IN MANUFACTURES STANDARD COLORS, WOOD GRAINS & PATTERNS CONTACT FACTORY FOR LATEST COLORS, WOOD GRAINS & PATTERNS AVAILABLE.
- INFORMATION SHOWN ON DRAWING REPRESENT STANDARD CONSTRUCTION FEATURES AND MATERIALS BEING USED, REFER TO CURRENT SPECIFICATIONS FOR DETAILED MATERIAL LISTING AND NUMEROUS OPTIONS THAT ARE AVAILABLE.

BASE CABINET
STANDARD Series
PLASTIC LAMINATE CONSTRUCTION

DWG. 8/10/05			DWG # JD1030
SCALE 1" = 12"			PGM: J/D/PP/C/B
DRAWN BY: RJA			

TODD-HEIM INDUSTRIES
DENSBURG PENNSYLVANIA

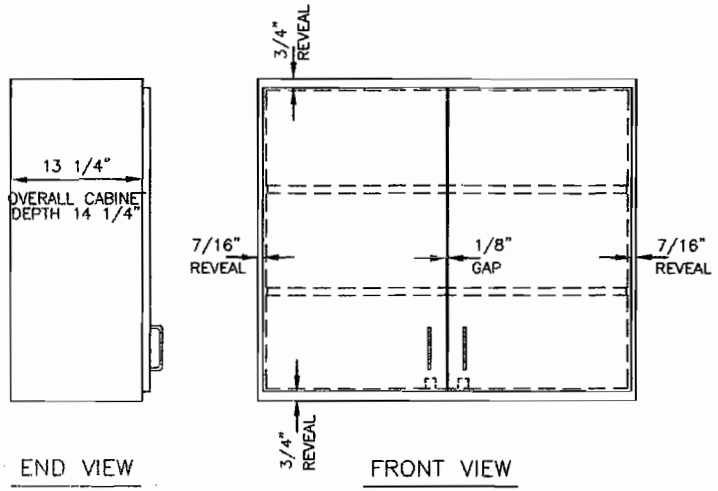

PARTS LISTING

1– CABINET SIDES 3/4" THICK CONSISTING OF A PARTICLEB'D. CORE WITH A 1/32" VERTICAL SURFACE GRADE HIGH PRESSURE LAMINATE ON EXPOSED SIDE AND CABINET LINER ON INTERIOR SIDE, WHITE IN COLOR. FRONT EDGE TO RECEIVE .020 PVC EDGING. COLOR TO BE SELECTED FROM MANUFACTURES STANDARD COLOR SELECTIONS.
WHEN CABINET SIDES ARE CONCEALED A THERMALLY FUSED MELAMINE LAMINATE WHITE IN COLOR WILL BE PROVIDED. TOP AND BOTTOM EDGE TO RECEIVE .020 PVC EDGING, COLOR TO MATCH INTERIOR.

2– TOP & BOTTOM 1" THICK, CONSISTING OF A PARTICLEBOARD CORE WITH A THERMALLY FUSED MELAMINE LAMINATE TWO SIDES WHITE IN COLOR, FRONT EDGE TO RECEIVE .020 PVC EDGING, COLOR TO BE SELECTED FROM MANUFACTURES STANDARD COLOR SELECTIONS.
BOTTOM IS FULL DEPTH AND NOTCHED TO RECEIVE BACK.

3– BACK 1/2" THICK CONSISTING OF A PARTICLEBOARD CORE WITH A THERMALLY FUSED MELAMINE LAMINATE TWO SIDES WHITE IN COLOR.

4– EXTERIOR SUPPORT RAILS 3/4" X 4" MELAMINE.

5– ADJUSTABLE SHELVES 1" THICK, CONSISTING OF A PARTICLEBOARD CORE WITH A THERMALLY FUSED MELAMINE LAMINATE TWO SIDES NEUTRAL IN COLOR, FRONT EDGE TO RECEIVE .020 PVC EDGING, COLOR TO MATCH SHELVES.

6– DOORS 3/4" THICK TO RECEIVE 1/32" VERTICAL SURFACE GRADE HIGH PRESSURE LAMINATE ON EXPOSED SIDE & CABINET LINER ON INTERIOR SIDE, WHITE IN COLOR. EDGES TO RECEIVE 3mm EDGING COLOR TO BE SELECTED FROM MANUFACTURES STANDARD COLOR SELECTIONS.

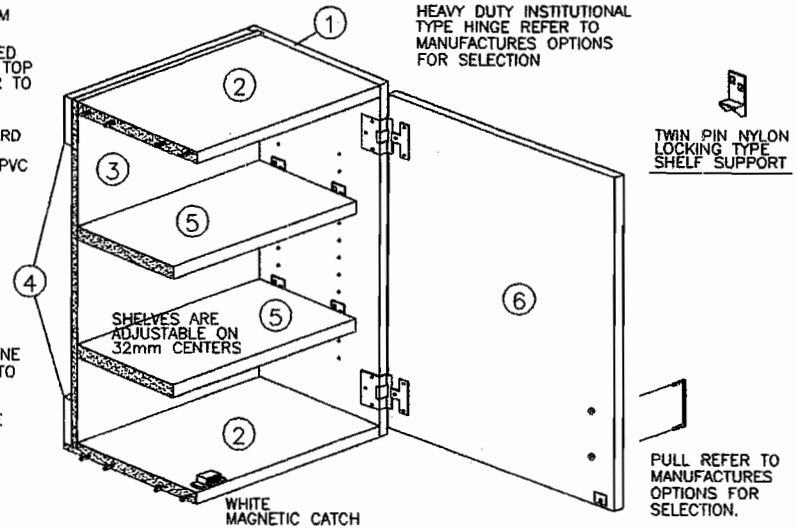

PARTIAL CONSTRUCTION DETAIL

TOP & BOTTOM TO BE JOINED TO CABINET SIDES WITH 8mm FLUTED HARDWOOD DOWELS & GLUE, EXTERIOR SUPPORT RAIL TO BE JOINED TO CABINET SIDES WITH POCKET SCREWS & ADDITIONALLY SCREWED TO TO TOP & BOTTOM, BACK IS PINNED & HOT MELTED TO CABINET SIDES & EXTERIOR SUPPORT RAILS. UNIT IS ELECTRONICALLY PRESSED TO ENSURE JOINT INTEGRITY & UNIT SQUARENESS.

STANDARD WIDTHS 12" THRU 48" ON 3" INCREMENTS
STANDARD HEIGHTS 15"–19 7/16"–23 9/16"–31"–36"–42"–48"
STANDARD DEPTH 13 1/4"

- ALL MELAMINE LAMINATES ARE THERMAL FUSED TO A HIGH DENISTY INDUSTRIAL GRADE PARTICLEBOARD
- ALL HIGH PRESSURE LAMINATES ARE BONDED TO A HIGH DENISTY INDUSTRIAL GRADE PARTICLEBOARD.
- EXPOSED EXTERIOR LAMINATES ARE AVAILABLE IN MOST STANDARD FORMICA OR WILSONART BRAND LAMINATES, CONTACT FACTORY FOR LATEST COLORS, WOOD GRAINS & PATTERNS AVAILABLE.
- EXPOSED EXTERIOR PVC AND 3mm EDGINGS ARE AVAILABLE IN MANUFACTURES STANDARD COLORS, WOOD GRAINS & PATTERNS CONTACT FACTORY FOR LATEST COLORS, WOOD GRAINS & PATTERNS AVAILABLE.
- INF ATION SHOWN ON DRAWING REPRESENT STANDARD CONSTRUCTION FEATUR ND MATERIALS BEING USED, REFER TO RENT SPECIFICATIONS FOR DETAILED MATERIAL LISTING AND NUMEROUS O. S THAT ARE AVAILABLE.

WALL CABINET
STANDARD 32mm
PLASTIC LAMINATE CONSTRUCTION

DWG	8/10/05	REVISIONS	DWG # JD1029
SCALE	1" = 12"		PATH J/D/FP/C/W
DRAWN BY	RJA		

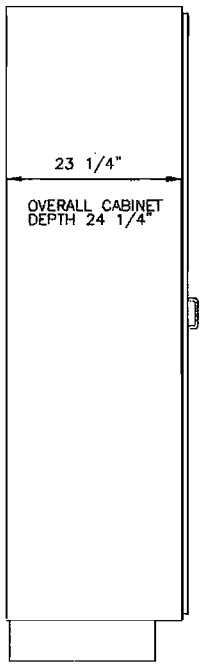

END VIEW

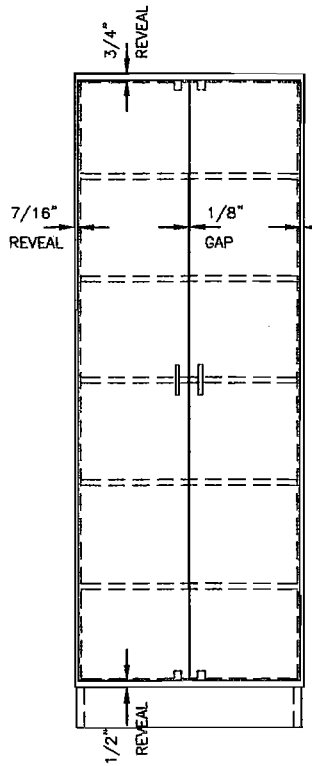

FRONT VIEW

PARTS LISTING

1- CABINET SIDES 3/4" THICK CONSISTING OF A PARTICLEB'D. CORE WITH A 1/32" VERTICAL SURFACE GRADE HIGH PRESSURE LAMINATE ON EXPOSED SIDE AND CABINET LINER ON INTERIOR SIDE, WHITE IN COLOR. FRONT EDGE TO RECEIVE .020 PVC EDGING. COLOR TO BE SELECTED FROM MANUFACTURES STANDARD COLOR SELECTIONS.
WHEN CABINET SIDES ARE CONCEALED A THERMALLY FUSED MELAMINE LAMINATE WHITE IN COLOR WILL BE PROVIDED.

2- TOP 1" THICK, CONSISTING OF A PARTICLEBOARD CORE WITH A THERMALLY FUSED MELAMINE LAMINATE TWO SIDES WHITE IN COLOR, FRONT EDGE TO RECEIVE .020 PVC EDGING, COLOR TO BE SELECTED FROM MANUFACTURES STANDARD COLOR SELECTIONS.

3- BOTTOM 3/4" THICK, CONSISTING OF A PARTICLEBOARD CORE WITH A THERMALLY FUSED MELAMINE LAMINATE TWO SIDES WHITE IN COLOR, FRONT EDGE TO RECEIVE .020 PVC EDGING, COLOR TO BE SELECTED FROM MANUFACTURES STANDARD COLOR SELECTIONS.

4- BACK 1/2" THICK CONSISTING OF A PARTICLEBOARD CORE WITH A TERMALLY FUSED MELAMINE LAMINATE TWO SIDES WHITE IN COLOR.

5- EXTERIOR SUPPORT RAILS 3/4" X 4" MELAMINE.

6- 3/4" THICK X 4" HIGH SEPERATE BASE FABRICATED FROM EXTERIOR GRADE PLYWOOD.

7- ADJUSTABLE & CENTER FIXED SHELVES 1" THICK, CONSISTING OF A PARTICLEBOARD CORE WITH A THERMALLY FUSED MELAMINE LAMINATE TWO SIDES WHITE IN COLOR, FRONT EDGE TO RECEIVE .020 PVC EDGING, COLOR TO MATCH SHELVES.

8- DOORS 3/4" THICK TO RECEIVE 1/32" VERTICAL SURFACE GRADE HIGH PRESSURE LAMINATE ON EXPOSED SIDE & CABINET LINER ON INTERIOR SIDE, WHITE IN COLOR. EDGES TO RECEIVE 3mm EDGING COLOR TO BE SELECTED FROM MANUFACTURES STANDARD COLOR SELECTIONS.

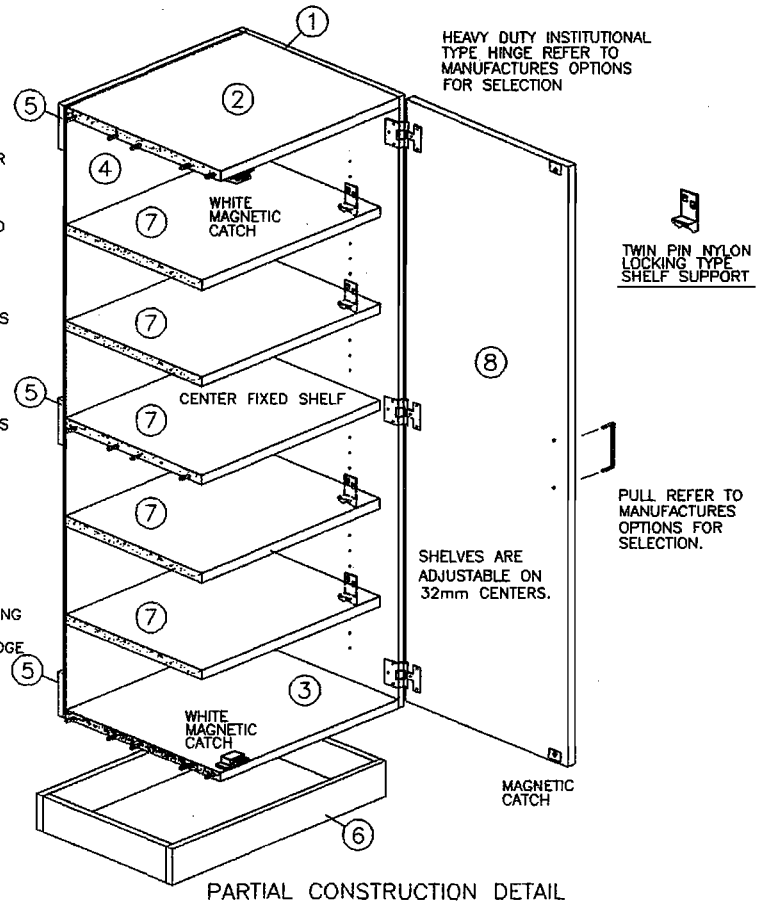

PARTIAL CONSTRUCTION DETAIL

TOP, BOTTOM & CENTER FIXED SHELF TO BE JOINED TO CABINET SIDES WITH 8mm FLUTED HARDWOOD DOWELS & GLUE, EXTERIOR SUPPORT RAILS TO BE JOINED TO CABINET SIDES WITH POCKET SCREWS & ADDITIONALLY SCREWED TO TOP, BOTTOM & CENTER FIXED SHELF. BACK IS PINNED & HOT MELTED TO CABINET SIDES & EXTERIOR SUPPORT RAILS. UNIT IS ELECTRONICALLY PRESSED TO ENSURE JOINT INTEGRITY & UNIT SQUARENESS.

STANDARD WIDTHS 12" THRU 48" ON 3" INCREMENTS
STANDARD HEIGHT 84"
STANDARD DEPTH 23 1/4"

- ALL MELAMINE LAMINATES ARE THERMAL FUSED TO A HIGH DENISTY INDUSTRIAL GRADE PARTICLEBOARD
- ALL HIGH PRESSURE LAMINATES ARE BONDED TO A HIGH DENISTY INDUSTRIAL GRADE PARTICLEBOARD
- EXPOSED EXTERIOR LAMINATES ARE AVAILABLE IN MOST STANDARD FORMICA OR WILSONART BRAND LAMINATES, CONTACT FACTORY FOR LATEST COLORS, WOOD GRAINS & PATTERNS AVAILABLE.
- EXPOSED EXTERIOR PVC AND 3mm EDGINGS ARE AVAILABLE IN MANUFACTURES STANDARD COLORS, WOOD GRAINS & PATTERNS CONTACT FACTORY FOR LATEST COLORS, WOOD GRAINS & PATTERNS AVAILABLE.
- INFORMATION SHOWN ON DRAWING REPRESENT STANDARD CONSTRUCTION FEATURES AND MATERIALS BEING USED, REFER TO CURRENT SPECIFICATIONS FOR DETAILED MATERIAL LISTING AND NUMEROUS OPTIONS THAT ARE AVAILABLE.

GREAT LAKES
-Mechanical-
3800 MAPLE DEARBORN, MI 48126-3672
PH. 313-581-1400 EST. FX. 313-581-0598

RFI #37

RECEIVED NOV 24 2006

FAX MEMO

DATE: 11/24/06

TO: Barton Malow

Smith Sheet A2.5

RE: Troy School District
(3) Middle Schools
(Boulan Park, Larson, Smith)

We picked up drawings on WED 11/22 for the above project.

BE ADVISED THAT SHEETS M4.1 & M4.2 are missing from our bid set. I will call Monday 11/27 to follow up.

Thanks

TOTAL PAGES

FROM: Danny Coss

(Boulan Park)

*WILL BE INCLUDED IN ADDENDUM -KS

TOTAL P.01

2043-12 CA RFI-038

TO: J. SORDYL
FROM: K. STAHLEY
F: 313-383-8234 (2pgs)

DEC 06 2006

DEC 05 2006
BY:

BARTON MALOW COMPANY

DCR/RFI

Date 12/6/2006

To: Leah

VIA BARTON MALOW COMPANY

FROM Jeff Sordyl ARJAC INC.
FAX (313) 383-8254

DCR/RFI # RFI #38

Contractors reference #

Project Three Middle Schools

BMC Project #

A/E Project #

Bid Package #

Bid Category #

Return To: ARJAC INC

Reference Specs:

Reference Drawings

Request:

(1) Door 407 at Smith appears on the door schedule but not in the hardware schedule. Is new hardware required. If so which hardware set.

(2) Doors 200, 201, 202, 204, 205, 206, 207, 208 and 209 are scheduled to receive fire rated glazing but the doors and/or frames are not listed as labeled openings in the door schedule. Are they fire rated openings. If so what are the ratings.

Please advise

Contractor or subcontractor

Jeff Sordyl
Submitted By

12/6/2006
Date

Barton Malow Company

Reviewed By

Date

Reply: (2) SEE RFI-034

Attachments:

(1) Will be clarified in Addendum. Provide storage room doors w/ hdwr. consistent w/ hdwr Specs.

This clarification is interpreted to be within the scope of the referenced contracts issued in accordance with the Contract Documents, and without change in Contract Sum or Contract Time, and, as such, is not an authorization for work beyond the scope of the contract.

Nov 6 2007

Architect/Engineer

Reply By

11/6/06
Date

RFI#39

SUBSTITUTION REQUEST FORM

TO: BARTON MALOW COMPANY/KINGSCOTT ASSOCIATES
1301 Boyd
Troy, MI 48083
PH – 248-823-4631 FAX – 248-823-4672

We hereby submit for your consideration the following product instead of the specified item for the above Project:

DRAWING NO.: ME 1.1 DRAWING NAME: MECH DWGS

SPEC. SECT.	SPEC. NAME	PARAGRAPH	SPECIFIED ITEM
15671-2	CONDENSING UNITS	2.2 (A)	ARCOAIRE

Proposed Substitution:

Attached complete information on changes to Drawings and/or Specifications which proposed substitution will require for its proper installation.

Submit with request all necessary samples and substantiating data to prove equal quality and performance to that which is specified. Clearly mark manufacturer's literature to indicate equality in performance.

CERTIFICATION OF EQUAL PERFORMANCE AND ASSUMPTION OF LIABILITY FOR EQUAL PERFORMANCE

The undersigned states that the function, appearance and quality are equivalent or superior to the specified item.

Submitted by:
KEVIN REID / Kevin Reid — SALES ENGINEER
Signature — Title

THERMALTECS, INC.
Firm

3500 WEST ELEVEN MI RD. BERKLEY, MI
Address

248-336-5546 — 12-1-06
Telephone — Date

Signature shall be by person having authority to legally bind his/her firm to the above terms. Failure to provide legally binding signature will result in retraction of approval.

12.07.06 PENDING REVIEW & OWNER APPROVAL
.... PLEASE CLARIFY BID.
-KS(BMC)

For use by Architect:	For Use by Owner:
____ Accepted ____ Accepted as Noted	____ Accepted ____ Accepted as Noted
____ Not Accepted ____ Received Too Late	____ Not Accepted ____ Received Too Late
____ Insufficient Data Received	____ Insufficient Data Received
By: _____	By: _____
Date: _____	Date: _____

Fill in Blanks Below: (Attach additional sheets as required)

A. Does the Substitution affect dimensions shown on Drawings?
Yes ____ No X If yes, clearly indicate changes: _____

B. Will the undersigned pay for changes to the building design, including engineering and detailing costs caused by the requested substitution?
Yes ____ No X If no, fully explain: NO COST CHANGE INVOLVED

C. What affect does substitution have on other contracts or other trades?
NONE

D. What affect does substitution have on the delivery and construction schedule? NONE

E. Manufacturer's warranties of the proposed and specified items are: X Same ____ Different
If Different, explain on an Attachment

F. Reason for Request: NOT NAMED

G. Itemized comparison of specified item(s) with the proposed substitution; list significant variations:
SEE CATALOG

H. Accurate cost data comparing proposed substitution with product specified:
PROVIDED WITH BID

I. This substitution will amount to a credit or an extra cost to the Owner of:
PROVIDED WITH BID dollars
($_____)

END OF SECTION 01630

Arcoaire®
Air Conditioning & Heating

H2A3
DX 1300
Product Specifications

EFFICIENT 13 SEER AIR CONDITIONER

1½ THRU 5 TONS SPLIT SYSTEM

208 / 230 Volt, 1–phase, 60 Hz

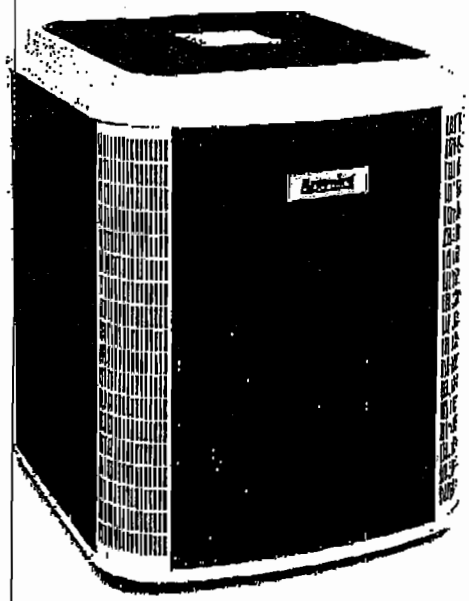

REFRIGERATION CIRCUIT
- Copeland SCROLL compressors on all models
- Filter–Drier supplied with every unit for field installation
- Copper tube / aluminum fin coil
- 3½, 4, & 5 ton models have 2–row coil for reduced height

PERFORMANCE
- 2–speed Fan Motors factory wired on all models
- Compressor Sound Jacket standard

EASY TO INSTALL AND SERVICE
- Comfort Alert™ Diagnostics device on all models
- Easy Access service valves on all models
- Compressor access panel
- New, innovative control box design
- High and Low pressure switches
- External high and low refrigerant service ports
- Fan motor in–line disconnect plug
- Only two screws to access control panel
- Factory charged with R–22 refrigerant

BUILT TO LAST
- High gloss, baked–on powder coat finish over galvanized steel
- Post–painted (black) coil fins
- SermaGard® coated cabinet screws
- Coated inlet grille with ⅜" spacing for extra protection
- Corner Posts for extra strength and style
- 1 year No Hassle replacement warranty
- 10 year limited compressor, 5 year limited coil and parts warranties

Rated in accordance with ARI Standard 210. Certification applies only when used with proper components as listed with ARI.

c UL us LISTED

NO hassle REPLACEMENT WARRANTY
see warranty certificate for details

Model Number	Size (tons)	Nominal Btu/hr	Min. Circuit Ampacity	Max. Fuse or Breaker	Operating Dimensions height x width x depth (in)	Ship / Operating Weight (lbs)
H2A318GKA	1½	18,000	11.7	20	35 15/16 x 31 3/16 x 32 5/16	202 / 174
H2A324GKA	2	24,000	18.3	30	35 15/16 x 31 3/16 x 32 5/16	206 / 178
H2A330GKA	2½	30,000	18.3	30	35 15/16 x 31 3/16 x 32 5/16	206 / 178
H2A336GKA	3	36,000	19.5	30	46 15/16 x 35 x 36 3/16	264 / 229
H2A342GKA	3½	42,000	23.8	40	33 5/16 x 35 x 36 3/16	280 / 247
H2A348GKA	4	48,000	26.6	40	36¾ x 35 x 36 3/16	300 / 266
H2A360GKA	5	60,000	33.1	50	46 15/16 x 35 x 36 3/16	314 / 279

Specifications subject to change without notice.

421 31 5300 00 January 2006

All Dimensions Inches

Model	A	B	C	D	E	F	G	H	J	K	L	M	N	P	R	Minimum Mounting Pad Size	Crated Dimensions B(h) x A(w) x R(d)
H2A318GKA	31⅜	35⅝	3¾	⅝	6⅜	24⅛	9⅛	⅝	3	2⅝	½	15⅞	15¾	15⅞	32⅝	31½ x 32½	40⅝ x 32⅜ x 33⅝
H2A324GKA	31⅜	35⅝	3¾	⅝	6⅜	24⅛	9⅛	⅝	3	2⅝	½	14	15½	16	32⅝	31½ x 32½	40⅝ x 32⅜ x 33⅝
H2A330GKA	31⅜	35⅝	3¾	¾	6⅜	24⅛	9⅛	⅝	3	2⅝	½	16¾	14¾	16¾	32⅝	31½ x 32½	40⅝ x 32⅜ x 33⅝
H2A336GKA	35	46⅝	3¾	¾	6⅜	24⅛	9⅛	⅝	3	2⅝	½	19¾	18	21¼	36⅜	35 x 36½	50⅜ x 36⅛ x 37¾
H2A342GKA	35	33⅝	3⅜	⅞	6⅜	24⅛	9⅛	⅝	3	2⅝	⅝	17⅜	18⅞	14¾	36⅜	35 x 36½	37¼ x 36⅛ x 37¾
H2A348GKA	35	36¾	3⅞	⅞	6⅜	28⅞	9⅛	⅝	3	2⅝	⅝	19	18	15¼	36⅜	35 x 36½	40⅝ x 36⅛ x 37¾
H2A360GKA	35	46⅝	3⅞	⅞	6⅜	28⅞	9⅛	⅝	3	2⅝	⅝	20½	19¾	18½	36⅜	35 x 36½	50⅜ x 36⅛ x 37¾

Specifications subject to change without notice.

PHYSICAL DATA							
Model Size	**18**	**24**	**30**	**36**	**42**	**48**	**60**
Nominal Cooling Capacity (BTU/hr)	18,000	24,000	30,000	36,000	42,000	48,000	60,000
Nominal SEER	13.0	13.0	13.0	13.0	13.0	13.0	13.0
Sound Rating (dBA)	73	73	75	75	76	76	76
PSC Fan Motor HP	1/12	1/8	1/8	1/5	1/4	1/4	1/4
Fan RPM (High / Low)	800	800	800	800	800	800	800
Fan CFM	2140	2470	2470	3270	3670	3670	3670
Coil Face Area (ft^2)	14.47	14.47	14.47	24.40	16.26	18.30	24.40
Coil Rows – fins per inch	1 – 25	1 – 25	1 – 25	1 – 25	2 – 20	2 – 20	2 – 20
Liquid Line Connection Size (in.)	3/8	3/8	3/8	3/8	3/8	3/8	3/8
Vapor Line Connection Size (in.)	5/8	5/8	3/4	3/4	7/8	7/8	7/8
Recommended Line Set Liquid Tube Diameter (in.)	3/8	3/8	3/8	3/8	3/8	3/8	3/8
Recommended Line Set Vapor Tube Diameter (in.)	5/8	5/8	3/4	3/4	7/8	7/8	1⅛
Factory Charge R–22 (lbs.)	4.56	5.38	5.38	8.13	8.33	11.00	13.60
Required Subcooling (°F)	10	9	11	9	9	12	13
Weight, shipping (lbs.)	202	206	206	264	280	300	314
Weight, operating (lbs.)	174	178	178	229	247	266	279

ELECTRICAL DATA (208/230–1–60, voltage range 197V – 253V)							
Model Size	**18**	**24**	**30**	**36**	**42**	**48**	**60**
Minimum Circuit Ampacity – **MCA** (amps)	11.7	18.3	18.3	19.5	23.8	26.6	33.1
Maximum OverCurrent Protective device – **MOCP** (amps)	20	30	30	30	40	40	50
Compressor **RLA** (Rated Load Amps) **LRA** (Locked Rotor Amps)	9.0 41.0	14.1 68.0	14.1 68.0	14.7 77.0	17.9 104.0	20.2 137.0	25.3 141.0
Fan Motor **FLA** (Full Load Amps)	0.5	0.7	0.7	1.1	1.4	1.4	1.4

Specifications subject to change without notice.

R-22 COOLING CAPACITY LOSS FOR VARIOUS LINE LENGTHS & TUBE DIAMETERS

Model Size	Liquid Line (in.)	Acceptable Vapor Line Sizes (in.)	Cooling Capacity Loss (%) at Total Equivalent Line Length (ft.) Refer to Long Line Application Guideline to calculate equivalent length										
			Standard Application			Long Line Application (Requires Accessories)							
			25'	50'	80'	81'	100'	125'	150'	175'	200'	225'	250'
18	3/8	5/8	1	1	2	2	3	3	4	5	5	6	7
		3/4	0	1	1	1	1	1	2	2	2	2	3
24		5/8	1	2	3	3	5	6	7	8	8	10	12
		3/4	0	1	1	1	2	2	3	3	3	4	4
		7/8	0	0	1	1	1	1	1	2	2	2	2
30		5/8	2	3	5	5	7	9	10	12	14	16	17
		3/4	1	1	2	2	3	3	4	5	5	6	7
		7/8	0	1	1	1	1	2	2	2	3	3	3
36		3/4	1	2	3	3	4	5	5	6	7	8	9
		7/8	1	1	1	1	2	2	3	3	4	4	5
42		3/4	1	2	4	4	5	6	7	8	10	11	12
		7/8	1	1	2	2	2	3	4	4	5	5	6
		1 1/8	0	0	1	1	1	1	1	1	1	2	2
48		3/4	2	3	5	5	6	8	9	11	12	14	15
		7/8	1	2	2	2	3	4	5	5	6	7	8
		1 1/8	0	0	1	1	1	1	1	2	2	2	2
60		7/8	1	2	3	3	5	6	7	8	9	10	11
		1 1/8	0	1	1	1	1	2	2	2	3	3	3

Applications in this shaded area are considered "Long Line" (total equivalent tubing length exceeds 80 feet or there is more than 20 foot vertical separation between indoor and outdoor units). These applications require additional accessories and system modifications for reliable system operation. Refer to the Long Line Application Guideline document for required piping and system modifications. Refer to Accessory Usage Guidelines below for required accessories.

Applications in this shaded area may have height restrictions that limit allowable total equivalent length when outdoor unit is below indoor unit. Refer to the Long Line Application Guideline document for instructions.

The maximum allowable total equivalent length is 250 feet.

ACCESSORY USAGE GUIDELINES

Accessory	REQUIRED FOR LOW-AMBIENT APPLICATIONS (Below 55° F)	REQUIRED FOR LONG LINE APPLICATIONS* (Over 80 Ft.)
Crankcase Heater	Yes	Yes
Evaporator Freeze Thermostat	Yes	No
Winter Start Control	Yes	No
Hard Start Kit	Yes	Yes
Low Ambient Pressure Switch	Yes	No
Support Feet, 4" tall	Recommended	No
Liquid Line Solenoid Valve	No	See Long Line Application Guideline

* For Line Set lengths between 80 and 200 ft horizontal, or more than 20 ft indoor–outdoor vertical separation, refer to the Long Line Application Guideline document.

ACCESSORIES

Part Number	Description	Used On Model Size
NASA001CH	Crankcase Heater for Scroll Compressor (208/230 V)	42 (factory installed on 48, 60)
NASA003CH	Crankcase Heater for Scroll Compressor (208/230 V Star Body)	18, 24, 30, 36
NASA001SC	Start Component – PTC Device	ALL
NASA001FS	Evaporator Freeze Thermostat	ALL
NASA201PS	Low Pressure Switch, AC, R–22	(factory installed on ALL)
NASA201LS	Liquid Line Solenoid Valve, R–22	ALL
NASA001TD	Time Delay Relay, Indoor Blower	ALL
NASA001WS	Winter Start Control	ALL
NASA001AC	Anti–Cycle Timer (5 minute delay)	ALL
NASA202PS	High Pressure Switch, AC or HP, R–22	(factory installed on ALL)
NASA003SC	Hard Start Kit (Capacitor & Relay)	18, 36, 42, 48, 60
NASA005SC	Hard Start Kit (Capacitor & Relay)	24, 30
NASA201LA	Low Ambient Pressure Switch	ALL
NASA001SF	Support Feet, 4" tall	ALL
NASA001SJ	Sound Jacket, Compressor	(factory installed on 18, 24, 30, 36, 42, 48)
NASA003SJ	Sound Jacket, Compressor	(factory installed on 60)
AMF153TKB	TXV Kit, R–22	18, 24, 30, 36
AMF355TKB	TXV Kit, R–22	42, 48, 60

03/10/2006 FRI 12:21 [JOB NO. 6084] 006

COOLING PERFORMANCE FOR COMBINATION RATINGS
Current Indoor Models

Outdoor Model	Current Indoor Model (‡ tested combo)	Furnace Model	Factory Installed	Cooling (95 °F)			SEER			
				BTU/hr	S/T	EER	factory	w/ field TDR	w/ field R-22 TXV	w/ field R-22 TXV + TDR
H2A318GKA	EB*2X18B**		TXV	17,300	0.78	11.00		13.00		
	EB*2X18B**	MV08B15****	TDR & TXV	17,700	0.78	11.50	14.00			
	EB*2X24B**		TXV	17,900	0.78	11.20		13.50		
	EB*2X24B**	MV08B15****	TDR & TXV	18,200	0.78	11.50	14.00			
	EB*2X24F**		TXV	17,900	0.78	11.20		13.50		
	EB*2X24F**	MV12F19****	TDR & TXV	18,200	0.78	11.50	14.00			
	‡ ED*2X18B**		TXV	17,500	0.78	11.00		13.00		
	ED*2X18B**	MV08B15****	TDR & TXV	17,700	0.78	11.70	14.00			
	ED*2X24B**		TXV	18,100	0.78	11.20		13.50		
	ED*2X24B**	MV08B15****	TDR & TXV	18,400	0.78	12.00	14.00			
	ED*2X24F**		TXV	18,100	0.78	11.20		13.50		
	ED*2X24F**	MV12F19****	TDR & TXV	18,400	0.78	12.50	14.00			
	EHD2X24A**		TXV	18,100	0.78	11.20		13.50		
	EHD2X24A**	*9MPV050	TDR & TXV	18,400	0.78	12.00	14.00			
	EHD2X24A**	*9MPV075	TDR & TXV	18,400	0.78	12.00	14.00			
	EHD2X24A**	MV08B15****	TDR & TXV	18,400	0.78	12.50	14.00			
	EHD2X24A**	MV12F19****	TDR & TXV	18,400	0.78	12.00	14.00			
	EMA2X24D**		TXV	18,100	0.78	11.20		13.50		
	FEM2X18****		TDR & TXV	18,300	0.78	11.70	14.00			
	FEM2X24****		TDR & TXV	18,500	0.78	12.00	14.00			
	FS(M,U)2X18****		TDR & TXV	17,800	0.78	11.00	13.20			
	FS(M,U)2X24****		TDR & TXV	18,100	0.78	11.00	13.20			
	FSA2X18****		TDR & TXV	18,000	0.78	11.00	13.20			
	FSA2X24****		TDR & TXV	18,300	0.78	11.20	13.50			
H2A324GKA	EB*2X24B**		TXV	23,800	0.73	11.00		13.00		
	EB*2X24B**	*8MPV050	TDR & TXV	24,200	0.73	11.20	13.50			
	EB*2X24B**	MV08B15****	TDR & TXV	24,200	0.73	11.50	14.00			
	EB*2X24F**		TXV	23,800	0.73	11.00		13.00		
	EB*2X24F**	*9MPV050	TDR & TXV	24,200	0.73	11.20	13.50			
	EB*2X24F**	*9MPV075	TDR & TXV	24,200	0.73	11.20	13.50			
	EB*2X24F**	MV12F19****	TDR & TXV	24,600	0.73	11.50	14.00			
	EB*2X30B**		TXV	24,000	0.73	11.00		13.00		
	EB*2X30B**	*8MPV050	TDR & TXV	24,400	0.73	11.20	13.50			
	EB*2X30B**	MV08B15****	TDR & TXV	24,600	0.73	11.50	14.00			
	EB*2X30F**		TXV	24,000	0.73	11.00		13.00		
	EB*2X30F**	*9MPV050	TDR & TXV	24,400	0.73	11.20	13.50			
	EB*2X30F**	*9MPV075	TDR & TXV	24,400	0.73	11.20	13.50			
	EB*2X30F**	MV12F19****	TDR & TXV	24,800	0.73	11.50	14.00			
	‡ ED*2X24B**		TXV	24,000	0.73	11.00		13.00		
	ED*2X24B**	*8MPV050	TDR & TXV	24,400	0.73	11.20	13.50			
	ED*2X24B**	MV08B15****	TDR & TXV	24,400	0.73	11.50	14.00			
	ED*2X24F**		TXV	24,000	0.73	11.00		13.00		
	ED*2X24F**	*8MPV075	TDR & TXV	24,800	0.73	11.20	13.50			
	ED*2X24F**	*9MPV050	TDR & TXV	24,400	0.73	11.20	13.50			
	ED*2X24F**	*9MPV075	TDR & TXV	24,400	0.73	11.20	13.50			
	ED*2X24F**	MV12F19****	TDR & TXV	24,800	0.73	11.50	14.00			
	ED*2X30B**		TXV	24,200	0.73	11.00		13.00		
	ED*2X30B**	*8MPV050	TDR & TXV	24,400	0.73	11.20	13.50			
	ED*2X30B**	MV08B15****	TDR & TXV	24,800	0.73	11.50	14.00			
	ED*2X30F**		TXV	24,200	0.73	11.00		13.00		
	ED*2X30F**	*9MPV050	TDR & TXV	24,600	0.73	11.20	13.50			
	ED*2X30F**	*9MPV075	TDR & TXV	24,600	0.73	11.20	13.50			
	ED*2X30F**	MV12F19****	TDR & TXV	25,000	0.73	11.50	14.00			
	EHD2X24A**		TXV	24,400	0.73	11.00		13.00		
	EHD2X24A**	*8MPV050	TDR & TXV	24,600	0.73	11.20	13.50			
	EHD2X24A**	*8MPV075	TDR & TXV	25,000	0.73	11.20	13.50			
	EHD2X24A**	*8MPV100	TDR & TXV	25,000	0.73	11.50	14.00			
	EHD2X24A**	*8MPV125	TDR & TXV	25,000	0.73	11.50	14.00			
	EHD2X24A**	*9MPV050	TDR & TXV	24,600	0.73	11.20	13.50			
	EHD2X24A**	*9MPV075	TDR & TXV	24,400	0.73	11.20	13.50			
	EHD2X24A**	*9MPV100	TDR & TXV	24,800	0.73	11.20	13.50			
	EHD2X24A**	MV08B15****	TDR & TXV	25,000	0.73	11.50	14.00			
	EHD2X24A**	MV12F19****	TDR & TXV	25,200	0.73	11.50	14.00			
	EHD2X24A**	MV16J22****	TDR & TXV	24,800	0.73	11.50	14.00			
	EHD2X24A**	MV20N26****	TDR & TXV	25,200	0.73	11.70	14.00			

– continued on next page –

Specifications subject to change without notice.

COOLING PERFORMANCE FOR COMBINATION RATINGS (continued)
Current Indoor Models

Outdoor Model	Current Indoor Model (‡ tested combo)	Furnace Model	Factory Installed	Cooling (95 °F)			SEER			
				BTU/hr	S/T	EER	factory	w/ field TDR	w/ field R-22 TXV	w/ field R-22 TXV + TDR
H2A324GKA (continued)	EHD2X30A**		TXV	24,400	0.73	11.00		13.00		
	EHD2X30A**	*8MPV050	TDR & TXV	24,600	0.73	11.20	13.50			
	EHD2X30A**	*8MPV075	TDR & TXV	25,200	0.73	11.20	13.50			
	EHD2X30A**	*8MPV100	TDR & TXV	25,400	0.73	11.50	14.00			
	EHD2X30A**	*8MPV125	TDR & TXV	25,200	0.73	11.50	14.00			
	EHD2X30A**	*9MPV050	TDR & TXV	24,800	0.73	11.20	13.50			
	EHD2X30A**	*9MPV075	TDR & TXV	24,600	0.73	11.20	13.50			
	EHD2X30A**	*9MPV100	TDR & TXV	25,000	0.73	11.50	14.00			
	EHD2X30A**	MV08B15****	TDR & TXV	25,200	0.73	11.50	14.00			
	EHD2X30A**	MV12F19****	TDR & TXV	25,000	0.73	11.50	14.00			
	EHD2X30A**	MV16J22****	TDR & TXV	25,200	0.73	11.70	14.00			
	EHD2X30A**	MV20N26****	TDR & TXV	24,800	0.73	11.70	14.00			
	FEM2X24****		TDR & TXV	24,200	0.73	11.20	13.50			
	FEM2X30****		TDR & TXV	24,400	0.73	11.50	14.00			
	FS(M,U)2X24****		TDR & TXV	23,800	0.73	11.00	13.00			
	FS(M,U)2X30****		TDR & TXV	24,000	0.73	11.00	13.00			
	FSA2X24****		TDR & TXV	24,400	0.73	11.00	13.00			
	FSA2X30****		TDR & TXV	25,200	0.73	11.00	13.00			
H2A330GKA	EB*2X30B**		TXV	29,800	0.79	11.00		13.00		
	EB*2X30B**	*8MPV050	TDR & TXV	29,800	0.79	11.00	13.20			
	EB*2X30B**	MV08B15****	TDR & TXV	30,200	0.79	11.50	14.00			
	EB*2X30F**		TXV	29,800	0.79	11.00		13.20		
	EB*2X30F**	*8MPV075	TDR & TXV	30,400	0.79	11.50	14.00			
	EB*2X30F**	*9MPV050	TDR & TXV	30,000	0.79	11.20	13.50			
	EB*2X30F**	*9MPV075	TDR & TXV	30,200	0.79	11.20	13.50			
	EB*2X30F**	MV12F19****	TDR & TXV	30,800	0.79	11.70	14.00			
	EB*2X36B**		TXV	30,000	0.79	11.00		13.00		
	EB*2X36B**	*8MPV050	TDR & TXV	30,000	0.79	11.20	13.50			
	EB*2X36B**	MV08B15****	TDR & TXV	30,400	0.79	11.70	14.00			
	EB*2X36F**		TXV	30,000	0.79	11.00		13.00		
	EB*2X36F**	*8MPV075	TDR & TXV	30,600	0.79	11.50	14.00			
	EB*2X36F**	*9MPV050	TDR & TXV	30,200	0.79	11.20	13.50			
	EB*2X36F**	*9MPV075	TDR & TXV	30,400	0.79	11.20	13.50			
	EB*2X36F**	MV12F19****	TDR & TXV	30,600	0.79	11.70	14.00			
	EB*2X36J**		TXV	30,000	0.79	11.00		13.00		
	EB*2X36J**	*8MPV100	TDR & TXV	30,800	0.79	11.70	14.00			
	EB*2X36J**	*8MPV125	TDR & TXV	30,800	0.79	11.70	14.00			
	EB*2X36J**	*9MPV100	TDR & TXV	30,800	0.79	11.50	14.00			
	EB*2X36J**	MV16J22****	TDR & TXV	30,800	0.79	12.00	14.00			
	‡ ED*2X30B**		TXV	30,000	0.79	11.00		13.00		
	ED*2X30B**	*8MPV050	TDR & TXV	30,000	0.79	11.00	13.20			
	ED*2X30B**	MV08B15****	TDR & TXV	30,400	0.79	11.70	14.00			
	ED*2X30F**		TXV	30,000	0.79	11.00		13.20		
	ED*2X30F**	*8MPV075	TDR & TXV	30,600	0.79	11.50	14.00			
	ED*2X30F**	*9MPV050	TDR & TXV	30,200	0.79	11.20	13.50			
	ED*2X30F**	*9MPV075	TDR & TXV	30,400	0.79	11.20	13.50			
	ED*2X30F**	MV12F19****	TDR & TXV	30,800	0.79	11.70	14.00			
	ED*2X36B**		TXV	30,200	0.79	11.00		13.20		
	ED*2X36B**	*8MPV050	TDR & TXV	30,200	0.79	11.20	13.50			
	ED*2X36B**	MV08B15****	TDR & TXV	30,600	0.79	11.70	14.00			
	ED*2X36F**		TXV	30,200	0.79	11.00		13.00		
	ED*2X36F**	*8MPV075	TDR & TXV	30,800	0.79	11.50	14.00			
	ED*2X36F**	*9MPV050	TDR & TXV	30,400	0.79	11.20	13.50			
	ED*2X36F**	*9MPV075	TDR & TXV	30,600	0.79	11.20	13.50			
	ED*2X36F**	MV12F19****	TDR & TXV	30,800	0.79	11.70	14.00			
	ED*2X36J**		TXV	30,200	0.79	11.00		13.20		
	ED*2X36J**	*8MPV100	TDR & TXV	30,600	0.79	11.70	14.00			
	ED*2X36J**	*8MPV125	TDR & TXV	30,600	0.79	11.70	14.00			
	ED*2X36J**	*9MPV100	TDR & TXV	30,600	0.79	11.50	14.00			
	ED*2X36J**	MV16J22****	TDR & TXV	30,600	0.79	12.00	14.00			
	EHD2X30A**		TXV	30,000	0.79	11.00		13.20		
	EHD2X30A**	*8MPV050	TDR & TXV	30,000	0.79	11.20	13.50			
	EHD2X30A**	*8MPV075	TDR & TXV	30,600	0.79	11.50	14.00			
	EHD2X30A**	*8MPV100	TDR & TXV	30,600	0.79	11.50	14.00			
	EHD2X30A**	*8MPV125	TDR & TXV	30,600	0.79	11.70	14.00			
	EHD2X30A**	*9MPV050	TDR & TXV	30,400	0.79	11.20	13.50			

– continued on next page –

COOLING PERFORMANCE FOR COMBINATION RATINGS (continued)
Current Indoor Models

Outdoor Model	Current Indoor Model (‡ tested combo)	Furnace Model	Factory Installed	Cooling (95 °F)			SEER			
				BTU/hr	S/T	EER	factory	w/ field TDR	w/ field R-22 TXV	w/ field R-22 TXV + TDR
H2A330GKA (continued)	EHD2X30A**	*9MPV075	TDR & TXV	30,600	0.79	11.20	13.50			
	EHD2X30A**	*9MPV100	TDR & TXV	30,600	0.79	11.50	14.00			
	EHD2X30A**	*9MPV125	TDR & TXV	30,600	0.79	11.50	14.00			
	EHD2X30A**	MV08B15****	TDR & TXV	30,600	0.79	11.70	14.00			
	EHD2X30A**	MV12F19****	TDR & TXV	30,600	0.79	11.70	14.00			
	EHD2X30A**	MV16J22****	TDR & TXV	30,600	0.79	11.70	14.00			
	EHD2X30A**	MV20N26****	TDR & TXV	30,600	0.79	12.00	14.00			
	EHD2X36A**		TXV	30,200	0.79	11.20		13.50		
	EHD2X36A**	*8MPV050	TDR & TXV	31,000	0.79	11.20	13.50			
	EHD2X36A**	*8MPV075	TDR & TXV	31,000	0.79	11.70	14.00			
	EHD2X36A**	*8MPV100	TDR & TXV	31,000	0.79	11.70	14.00			
	EHD2X36A**	*8MPV125	TDR & TXV	31,000	0.79	12.00	14.00			
	EHD2X36A**	*9MPV050	TDR & TXV	30,600	0.79	11.20	13.50			
	EHD2X36A**	*9MPV075	TDR & TXV	31,000	0.79	11.50	14.00			
	EHD2X36A**	*9MPV100	TDR & TXV	31,000	0.79	11.70	14.00			
	EHD2X36A**	MV08B15****	TDR & TXV	31,000	0.79	11.70	14.00			
	EHD2X36A**	MV12F19****	TDR & TXV	31,000	0.79	12.00	14.00			
	EHD2X36A**	MV16J22****	TDR & TXV	31,000	0.79	12.00	14.00			
	EHD2X36A**	MV20N26****	TDR & TXV	31,000	0.79	12.00	14.00			
	EMA2X36D**		TXV	30,000	0.79	11.00		13.20		
	FEM2X30****		TDR & TXV	30,200	0.79	11.50	14.00			
	FEM2X36****		TDR & TXV	31,000	0.79	11.70	14.00			
	FS(M,U)2X30****		TDR & TXV	29,800	0.79	11.00	13.20			
	FSA2X30****		TDR & TXV	29,800	0.79	11.00	13.20			
	FSA2X36****		TDR & TXV	30,200	0.79	11.20	13.50			
	FSM2X36****		TDR & TXV	30,600	0.79	11.20	13.50			
	FSU2X36****		TDR & TXV	30,000	0.79	11.00	13.20			
H2A336GKA	EB*2X36B**		TXV	35,400	0.76	11.00		13.00		
	EB*2X36B**	MV08B15****	TDR & TXV	36,000	0.76	11.20	13.50			
	EB*2X36F**		TXV	35,800	0.76	11.00		13.00		
	EB*2X36F**	*8MPV075	TDR & TXV	36,200	0.76	11.20	13.50			
	EB*2X36F**	*9MPV075	TDR & TXV	36,000	0.76	11.00	13.00			
	EB*2X36F**	MV12F19****	TDR & TXV	36,600	0.76	11.50	14.00			
	EB*2X36J**		TXV	35,800	0.76	11.00		13.00		
	EB*2X36J**	*8MPV100	TDR & TXV	36,600	0.76	11.50	14.00			
	EB*2X36J**	*8MPV125	TDR & TXV	36,600	0.76	11.50	14.00			
	EB*2X36J**	*9MPV100	TDR & TXV	36,600	0.76	11.20	13.50			
	EB*2X36J**	MV16J22****	TDR & TXV	36,800	0.76	11.70	14.00			
	EB*2X42J**		TXV	36,200	0.76	11.00		13.00		
	EB*2X42J**	*8MPV100	TDR & TXV	37,000	0.76	11.50	14.00			
	EB*2X42J**	*8MPV125	TDR & TXV	37,000	0.76	11.50	14.00			
	EB*2X42J**	*9MPV100	TDR & TXV	36,800	0.76	11.20	13.50			
	EB*2X42J**	MV16J22****	TDR & TXV	37,200	0.76	11.70	14.00			
	EB*2X42L**		TXV	36,200	0.76	11.00		13.00		
	EB*2X42L**	*9MPV125	TDR & TXV	37,000	0.76	11.20	13.50			
	ED*2X36B**		TXV	35,600	0.76	11.00		13.00		
	ED*2X36B**	*8MPV050	TDR & TXV	35,400	0.76	11.00	13.00			
	ED*2X36B**	MV08B15****	TDR & TXV	36,200	0.76	11.20	13.50			
	‡ ED*2X36F**		TXV	36,000	0.76	11.00		13.00		
	ED*2X36F**	*8MPV075	TDR & TXV	36,400	0.76	11.20	13.50			
	ED*2X36F**	*9MPV075	TDR & TXV	36,200	0.76	11.00	13.00			
	ED*2X36F**	MV12F19****	TDR & TXV	36,800	0.76	11.50	14.00			
	ED*2X36J**		TXV	36,000	0.76	11.00		13.00		
	ED*2X36J**	*8MPV100	TDR & TXV	36,800	0.76	11.50	14.00			
	ED*2X36J**	*8MPV125	TDR & TXV	36,800	0.76	11.50	14.00			
	ED*2X36J**	*9MPV100	TDR & TXV	36,800	0.76	11.20	13.50			
	ED*2X36J**	MV16J22****	TDR & TXV	37,000	0.76	11.70	14.00			
	ED*2X42J**		TXV	36,600	0.76	11.00		13.00		
	ED*2X42J**	*8MPV100	TDR & TXV	37,200	0.76	11.50	14.00			
	ED*2X42J**	*8MPV125	TDR & TXV	37,200	0.76	11.50	14.00			
	ED*2X42J**	*9MPV100	TDR & TXV	37,000	0.76	11.20	13.50			
	ED*2X42J**	MV16J22****	TDR & TXV	37,400	0.76	11.70	14.00			
	ED*2X42L**		TXV	36,600	0.76	11.00		13.00		
	ED*2X42L**	*9MPV125	TDR & TXV	37,200	0.76	11.20	13.50			
	EHD2X36A**		TXV	35,600	0.76	11.00		13.20		
	EHD2X36A**	*8MPV075	TDR & TXV	36,400	0.76	11.20	13.50			

– continued on next page –

COOLING PERFORMANCE FOR COMBINATION RATINGS (continued)
Current Indoor Models

Outdoor Model	Current Indoor Model (‡ tested combo)	Furnace Model	Factory Installed	Cooling (95 °F)			SEER			
				BTU/hr	S/T	EER	factory	w/ field TDR	w/ field R-22 TXV	w/ field R-22 TXV + TDR
H2A336GKA (continued)	EHD2X36A**	*8MPV100	TDR & TXV	36,800	0.76	11.50	14.00			
	EHD2X36A**	*8MPV125	TDR & TXV	36,800	0.76	11.50	14.00			
	EHD2X36A**	*9MPV050	TDR & TXV	35,400	0.76	11.20	13.50			
	EHD2X36A**	*9MPV075	TDR & TXV	36,200	0.76	11.20	13.50			
	EHD2X36A**	MV08B15****	TDR & TXV	36,200	0.76	11.50	13.50			
	EHD2X36A**	MV12F19****	TDR & TXV	36,800	0.76	11.50	14.00			
	EHD2X42A**		TXV	36,600	0.76	11.00		13.00		
	EHD2X42A**	*8MPV050	TDR & TXV	36,800	0.76	11.20	13.50			
	EHD2X42A**	*8MPV075	TDR & TXV	37,200	0.76	11.20	13.50			
	EHD2X42A**	*8MPV100	TDR & TXV	37,200	0.76	11.50	14.00			
	EHD2X42A**	*8MPV125	TDR & TXV	37,200	0.76	11.70	14.00			
	EHD2X42A**	*9MPV050	TDR & TXV	36,800	0.76	11.20	13.50			
	EHD2X42A**	*9MPV075	TDR & TXV	37,000	0.76	11.20	13.50			
	EHD2X42A**	MV08B15****	TDR & TXV	37,400	0.76	11.50	14.00			
	EHD2X42A**	MV12F19****	TDR & TXV	37,400	0.76	11.70	14.00			
	EHD2X42A**	MV16J22****	TDR & TXV	37,600	0.76	12.00	14.00			
	EHD2X42A**	MV20N26****	TDR & TXV	37,800	0.76	12.00	14.00			
	EMA2X36D**		TXV	35,600	0.76	11.00		13.00		
	FEM2X36****		TDR & TXV	37,200	0.76	11.50	14.00			
	FEM2X42****		TDR & TXV	37,400	0.76	11.50	14.00			
	FS(M,U)2X42****		TDR & TXV	36,800	0.76	11.00	13.20			
	FSA2X36****		TDR & TXV	36,000	0.76	11.00	13.00			
	FSM2X36****		TDR & TXV	36,800	0.76	11.00	13.20			
	FSU2X36****		TDR & TXV	36,000	0.76	11.00	13.00			
H2A342GKA	EB*2X42J**		TXV	41,500	0.75	11.00		13.00		
	EB*2X42J**	*8MPV100	TDR & TXV	41,500	0.75	11.20	13.50			
	EB*2X42J**	*8MPV125	TDR & TXV	41,500	0.75	11.20	13.50			
	EB*2X42J**	*9MPV100	TDR & TXV	41,500	0.75	11.00	13.20			
	EB*2X42J**	MV16J22****	TDR & TXV	41,500	0.75	11.50	14.00			
	EB*2X42L**		TXV	41,500	0.75	11.00		13.00		
	EB*2X42L**	*9MPV125	TDR & TXV	41,500	0.75	11.20	13.50			
	EB*2X48F**		TXV	42,500	0.75	11.00		13.20		
	EB*2X48F**	*8MPV075	TDR & TXV	42,000	0.75	11.20	13.50			
	EB*2X48F**	*9MPV075	TDR & TXV	41,500	0.75	11.00	13.20			
	EB*2X48J**		TXV	42,500	0.75	11.00		13.20		
	EB*2X48J**	*8MPV100	TDR & TXV	43,000	0.75	11.20	13.50			
	EB*2X48J**	*8MPV125	TDR & TXV	43,000	0.75	11.20	13.50			
	EB*2X48J**	*9MPV100	TDR & TXV	42,500	0.75	11.20	13.50			
	EB*2X48J**	MV16J22****	TDR & TXV	43,000	0.75	11.50	14.00			
	EB*2X48L**		TXV	42,500	0.75	11.00		13.20		
	EB*2X48L**	*9MPV125	TDR & TXV	42,500	0.75	11.20	13.50			
	‡ ED*2X42J**		TXV	41,500	0.75	11.00		13.00		
	ED*2X42J**	*8MPV100	TDR & TXV	41,500	0.75	11.20	13.50			
	ED*2X42J**	*8MPV125	TDR & TXV	42,000	0.75	11.20	13.50			
	ED*2X42J**	*9MPV100	TDR & TXV	42,000	0.75	11.00	13.20			
	ED*2X42J**	MV16J22****	TDR & TXV	42,500	0.75	11.50	14.00			
	ED*2X42L**		TXV	41,500	0.75	11.00		13.00		
	ED*2X42L**	*9MPV125	TDR & TXV	41,500	0.75	11.20	13.50			
	ED*2X48F**		TXV	42,500	0.75	11.00		13.20		
	ED*2X48F**	*8MPV075	TDR & TXV	42,500	0.75	11.20	13.50			
	ED*2X48F**	*9MPV075	TDR & TXV	42,000	0.75	11.00	13.20			
	ED*2X48J**		TXV	42,500	0.75	11.00		13.20		
	ED*2X48J**	*8MPV100	TDR & TXV	43,000	0.75	11.20	13.50			
	ED*2X48J**	*8MPV125	TDR & TXV	43,000	0.75	11.20	13.50			
	ED*2X48J**	*9MPV100	TDR & TXV	42,500	0.75	11.20	13.50			
	ED*2X48J**	MV16J22****	TDR & TXV	43,000	0.75	11.50	14.00			
	ED*2X48L**		TXV	42,500	0.75	11.00		13.20		
	ED*2X48L**	*9MPV125	TDR & TXV	42,500	0.75	11.20	13.50			
	EHD2X42A**		TXV	42,500	0.75	11.00		13.20		
	EHD2X42A**	*8MPV075	TDR & TXV	42,500	0.75	11.20	13.50			
	EHD2X42A**	*8MPV100	TDR & TXV	43,000	0.75	11.20	13.50			
	EHD2X42A**	*8MPV125	TDR & TXV	43,000	0.75	11.20	13.50			
	EHD2X42A**	*9MPV075	TDR & TXV	42,000	0.75	11.00	13.20			
	EHD2X42A**	*9MPV100	TDR & TXV	42,500	0.75	11.20	13.50			
	EHD2X42A**	*9MPV125	TDR & TXV	42,500	0.75	11.20	13.50			
	EHD2X42A**	MV16J22****	TDR & TXV	43,500	0.75	11.50	14.00			

– continued on next page –

COOLING PERFORMANCE FOR COMBINATION RATINGS (continued)
Current Indoor Models

Outdoor Model	Current Indoor Model (‡ tested combo)	Furnace Model	Factory Installed	Cooling (95 °F)			SEER			
				BTU/hr	S/T	EER	factory	w/ field TDR	w/ field R-22 TXV	w/ field R-22 TXV + TDR
H2A342GKA (continued)	EHD2X42A**	MV20N26****	TDR & TXV	44,000	0.75	11.50	14.00			
	EHD2X48A**		TXV	43,000	0.75	11.00		13.20		
	EHD2X48A**	*8MPV075	TDR & TXV	43,000	0.75	11.20	13.50			
	EHD2X48A**	*8MPV100	TDR & TXV	43,500	0.75	11.20	13.50			
	EHD2X48A**	*8MPV125	TDR & TXV	43,000	0.75	11.50	14.00			
	EHD2X48A**	*9MPV075	TDR & TXV	42,000	0.75	11.20	13.50			
	EHD2X48A**	*9MPV100	TDR & TXV	43,000	0.75	11.20	13.50			
	EHD2X48A**	*9MPV125	TDR & TXV	43,000	0.75	11.50	14.00			
	EHD2X48A**	MV16J22****	TDR & TXV	43,500	0.75	11.70	14.00			
	EHD2X48A**	MV20N26****	TDR & TXV	43,000	0.75	11.70	14.00			
	EMA2X48D**		TXV	42,000	0.75	11.00		13.00		
	FEM2X42****		TDR & TXV	42,500	0.75	11.20	13.50			
	FEM2X48****		TDR & TXV	43,500	0.75	11.70	14.00			
	FS(M,U)2X42****		TDR & TXV	42,500	0.75	11.00	13.00			
	FS(M,U)2X48****		TDR & TXV	43,000	0.75	11.00	13.20			
H2A348GKA	EB*2X48F**		TXV	46,500	0.76	11.00		13.00		
	EB*2X48J**		TXV	47,000	0.76	11.00		13.00		
	EB*2X48J**	*8MPV100	TDR & TXV	47,000	0.76	11.00	13.00			
	EB*2X48J**	*8MPV125	TDR & TXV	46,500	0.76	11.20	13.50			
	EB*2X48J**	*9MPV100	TDR & TXV	45,500	0.76	11.00	13.20			
	EB*2X48J**	MV16J22****	TDR & TXV	46,500	0.76	11.50	14.00			
	EB*2X48L**		TXV	47,000	0.76	11.00		13.00		
	EB*2X48L**	*9MPV125	TDR & TXV	46,500	0.76	11.00	13.20			
	EB*2X60J**		TXV	48,000	0.76	11.00		13.20		
	EB*2X60J**	*8MPV100	TDR & TXV	48,000	0.76	11.20	13.50			
	EB*2X60J**	*8MPV125	TDR & TXV	48,500	0.76	11.20	13.50			
	EB*2X60J**	*9MPV100	TDR & TXV	47,000	0.76	11.20	13.50			
	EB*2X60J**	MV16J22****	TDR & TXV	48,000	0.76	11.50	14.00			
	EB*2X60L**		TXV	48,000	0.76	11.00		13.20		
	EB*2X60L**	*9MPV125	TDR & TXV	48,000	0.76	11.20	13.50			
	ED*2X48F**		TXV	46,500	0.76	11.00		13.00		
	‡ ED*2X48J**		TXV	47,000	0.76	11.00		13.00		
	ED*2X48J**	*8MPV100	TDR & TXV	47,000	0.76	11.00	13.00			
	ED*2X48J**	*8MPV125	TDR & TXV	46,500	0.76	11.20	13.50			
	ED*2X48J**	*9MPV100	TDR & TXV	45,500	0.76	11.00	13.20			
	ED*2X48J**	MV16J22****	TDR & TXV	47,500	0.76	11.20	13.50			
	ED*2X48L**		TXV	47,000	0.76	11.00		13.00		
	ED*2X48L**	*9MPV125	TDR & TXV	46,500	0.76	11.00	13.20			
	ED*2X60J**		TXV	48,000	0.76	11.00		13.20		
	ED*2X60J**	*8MPV100	TDR & TXV	48,000	0.76	11.00	13.50			
	ED*2X60J**	*8MPV125	TDR & TXV	48,000	0.76	11.50	14.00			
	ED*2X60J**	*9MPV100	TDR & TXV	48,000	0.76	11.00	13.20			
	ED*2X60J**	MV16J22****	TDR & TXV	49,000	0.76	11.50	14.00			
	ED*2X60L**		TXV	48,000	0.76	11.00		13.20		
	ED*2X60L**	*9MPV125	TDR & TXV	48,000	0.76	11.20	13.50			
	EHD2X48A**		TXV	46,500	0.76	11.00		13.00		
	EHD2X48A**	*8MPV100	TDR & TXV	47,000	0.76	11.20	13.50			
	EHD2X48A**	*8MPV125	TDR & TXV	46,500	0.76	11.20	13.50			
	EHD2X48A**	*9MPV100	TDR & TXV	45,500	0.76	11.20	13.20			
	EHD2X48A**	*9MPV125	TDR & TXV	46,000	0.76	11.00	13.20			
	EHD2X48A**	MV16J22****	TDR & TXV	47,500	0.76	11.20	13.50			
	EHD2X48A**	MV20N26****	TDR & TXV	47,500	0.76	11.20	13.50			
	EHD2X60A**		TXV	48,000	0.76	11.00		13.20		
	EHD2X60A**	*8MPV100	TDR & TXV	48,000	0.76	11.20	13.50			
	EHD2X60A**	*8MPV125	TDR & TXV	49,000	0.76	11.20	13.50			
	EHD2X60A**	*9MPV100	TDR & TXV	48,000	0.76	11.00	13.20			
	EHD2X60A**	*9MPV125	TDR & TXV	48,000	0.76	11.20	13.50			
	EHD2X60A**	MV16J22****	TDR & TXV	49,000	0.76	11.50	14.00			
	EHD2X60A**	MV20N26****	TDR & TXV	49,000	0.76	11.50	14.00			
	EMA2X48D**		TXV	45,500	0.76	11.00		13.00		
	FEM2X48****		TDR & TXV	48,000	0.76	11.20	13.50			
	FEM2X60****		TDR & TXV	49,000	0.76	11.50	14.00			
	FS(M,U)2X48****		TDR & TXV	47,500	0.76	11.00	13.00			
	FS(M,U)2X60****		TDR & TXV	48,500	0.76	11.00	13.20			

– continued on next page –

COOLING PERFORMANCE FOR COMBINATION RATINGS (continued)
Current Indoor Models

Outdoor Model	Current Indoor Model (‡ tested combo)	Furnace Model	Factory Installed	Cooling (95 °F)			SEER			
				BTU/hr	S/T	EER	factory	w/ field TDR	w/ field R-22 TXV	w/ field R-22 TXV + TDR
H2A360GKA	EB*2X60J**		TXV	56,500	0.78	11.00		13.00		
	EB*2X60J**	*8MPV100	TDR & TXV	56,500	0.78	11.00	13.20			
	EB*2X60J**	*8MPV125	TDR & TXV	57,000	0.78	11.00	13.20			
	EB*2X60J**	*9MPV100	TDR & TXV	55,500	0.78	11.00	13.00			
	EB*2X60J**	MV16J22****	TDR & TXV	57,500	0.78	11.20	13.50			
	EB*2X60L**		TXV	57,500	0.78	11.00		13.00		
	EB*2X60L**	*9MPV125	TDR & TXV	55,500	0.78	11.00	13.20			
	ED*2X60J**		TXV	56,500	0.78	11.00		13.00		
	ED*2X60J**	*8MPV100	TDR & TXV	56,500	0.78	11.00	13.20			
	ED*2X60J**	*8MPV125	TDR & TXV	57,000	0.78	11.00	13.20			
	ED*2X60J**	*9MPV100	TDR & TXV	55,500	0.78	11.00	13.00			
	ED*2X60J**	MV16J22****	TDR & TXV	57,500	0.78	11.20	13.50			
	‡ ED*2X60L**		TXV	57,500	0.78	11.00		13.00		
	ED*2X60L**	*9MPV125	TDR & TXV	55,500	0.78	11.00	13.20			
	EHD2X60A**		TXV	57,500	0.78	11.00		13.00		
	EHD2X60A**	*8MPV100	TDR & TXV	56,500	0.78	11.00	13.20			
	EHD2X60A**	*8MPV125	TDR & TXV	57,000	0.78	11.00	13.20			
	EHD2X60A**	*9MPV100	TDR & TXV	56,000	0.78	11.00	13.00			
	EHD2X60A**	*9MPV125	TDR & TXV	56,000	0.78	11.00	13.20			
	EHD2X60A**	MV16J22****	TDR & TXV	58,000	0.78	11.20	13.50			
	EHD2X60A**	MV20N26****	TDR & TXV	58,000	0.78	11.20	13.50			
	FEM2X60****		TDR & TXV	58,000	0.78	11.00	13.20			
	FS(M,U)2X60****		TDR & TXV	56,500	0.78	11.00	13.00			

COOLING PERFORMANCE FOR COMBINATION RATINGS
Obsolete Indoor Models

Outdoor Model	Obsolete Indoor Model	Furnace Model	Factory Installed	Cooling (95 °F)			SEER			
				BTU/hr	S/T	EER	factory	w/ field TDR	w/ field R-22 TXV	w/ field R-22 TXV + TDR
H2A318GKA	EBP18****		TDR	17,000	0.78	11.45			12.55	
	EBP24****		TDR	18,100	0.78	11.20			13.50	
	EBV24****		TDR & TXV	18,800	0.78	12.50	14.00			
	EBV36****		TDR & TXV	18,500	0.78	11.50	14.00			
	EBX18****		TDR & TXV	17,300	0.78	11.20	13.50			
	EL*18B****		NONE	15,700	0.78	10.35				11.30
	EL*18B****	MV08B15****	TDR	15,900	0.78	11.00			13.00	
	EL*24B****		NONE	16,700	0.78	11.25				12.30
	EL*24B****	MV08B15****	TDR	17,100	0.78	11.50			14.00	
	EMH24F****		NONE	16,700	0.78	11.25				12.30
	EP*18B****		NONE	15,700	0.78	10.45				11.40
	EP*18B****	MV08B15****	TDR	15,900	0.78	11.00			13.00	
	EP*24B****		NONE	16,700	0.78	11.25				12.60
	EP*24B****	MV08B15****	TDR	17,000	0.78	11.50			14.00	
	EP*24F****		NONE	16,700	0.78	11.25				12.30
	EP*24F****	MV12F19****	TDR	17,000	0.78	11.50			14.00	
	EPP024****		NONE	15,300	0.78	10.20				11.10
	EX*24B****		TXV	17,800	0.78	11.00		13.20		
	EX*24B****	MV08B15****	TDR & TXV	17,900	0.78	12.00	14.00			
	EX*24F****		TXV	17,800	0.78	11.00		13.20		
	EX*24F****	*9MPV050	TDR & TXV	18,500	0.78	11.70	14.00			
	EX*24F****	MV12F19****	TDR & TXV	17,900	0.78	12.00	14.00			
	FWM18****		TDR	17,100	0.78	11.00			13.00	
	FWM24****		TDR	18,000	0.78	11.00			13.20	
H2A324GKA	EBP24****		TDR	23,400	0.73	10.80			12.50	
	EBP30****		TDR	23,800	0.73	11.05			12.80	
	EBV24****		TDR & TXV	24,600	0.73	11.20	13.50			
	EBV36****		TDR & TXV	24,600	0.73	11.20	13.50			
	EBV48****		TDR & TXV	25,200	0.73	11.20	13.50			
	EBX18****		TDR & TXV	23,400	0.73	10.80	12.50			
	EBX24****		TDR & TXV	23,800	0.73	11.05	12.90			
	EL*24B****		NONE	22,000	0.73	10.80				11.75
	EL*24B****	*8MPV050	TDR	22,200	0.73	10.80			12.55	
	EL*30B****		NONE	22,400	0.73	10.35				12.00
	EMH24F****		NONE	22,000	0.73	10.80				11.75
	EMH30F****		NONE	22,400	0.73	10.85				12.00
	EP*24B****		NONE	22,000	0.73	10.20				11.75
	EP*24F****		NONE	22,000	0.73	10.20				11.75
	EP*30B****		NONE	22,400	0.73	10.35				12.00
	EP*30F****		NONE	22,400	0.73	10.35				12.00
	EPP030****		NONE	21,600	0.73	10.05				11.60
	EX*24B****		TXV	23,600	0.73	10.85		12.55		
	EX*24B****	*8MPV050	TDR & TXV	24,000	0.73	11.00	13.00			
	EX*24B****	MV08B15****	TDR & TXV	24,200	0.73	11.20	13.50			
	EX*24F****		TXV	23,600	0.73	10.85		12.55		
	EX*24F****	*8MPV075	TDR & TXV	24,200	0.73	11.00	13.20			
	EX*24F****	*9MPV050	TDR & TXV	24,200	0.73	11.00	13.00			
	EX*24F****	*9MPV075	TDR & TXV	24,200	0.73	11.00	13.20			
	EX*24F****	MV12F19****	TDR & TXV	24,400	0.73	11.20	13.50			
	FWM24****		TDR	23,200	0.73	10.60			12.30	
	FWM30****		TDR	23,800	0.73	10.90			12.60	
H2A330GKA	EBP30****		TDR	29,600	0.79	11.00			13.20	
	EBP36****		TDR	29,600	0.79	11.00			12.95	
	EBV24****		TDR & TXV	30,400	0.79	11.50	14.00			
	EBV36****		TDR & TXV	30,400	0.79	11.50	14.00			
	EBV48****		TDR & TXV	31,600	0.79	11.70	14.00			
	EL*30B****		NONE	27,800	0.79	10.55				12.40
	EL*30B****	*8MPV050	TDR	27,800	0.79	10.55			12.40	
	EL*30B****	MV08B15****	TDR	28,200	0.79	11.20			13.50	
	EL*36B****		NONE	29,000	0.79	10.95				12.85
	EL*36B****	*8MPV050	TDR	29,000	0.79	10.95			12.85	
	EL*36B****	MV08B15****	TDR	29,200	0.79	11.20			13.50	
	EL*36F****		NONE	29,000	0.79	10.95				12.85
	EL*36F****	*9MPV075	TDR	29,400	0.79	11.20			13.50	
	EL*36F****	MV12F19****	TDR	29,600	0.79	11.50			14.00	
	EMH30F****		NONE	27,800	0.79	10.85				12.40

– continued on next page –

COOLING PERFORMANCE FOR COMBINATION RATINGS (continued)
Obsolete Indoor Models

Outdoor Model	Obsolete Indoor Model	Furnace Model	Factory Installed	Cooling (95 °F)			SEER			
				BTU/hr	S/T	EER	factory	w/ field TDR	w/ field R-22 TXV	w/ field R-22 TXV + TDR
H2A330GKA (continued)	EMH36F****		NONE	29,000	0.79	10.95				12.85
	EP*30B****		NONE	27,800	0.79	10.55				12.40
	EP*30B****	*8MPV050	TDR	27,800	0.79	10.55			12.40	
	EP*30B****	MV08B15****	TDR	28,200	0.79	11.20			13.50	
	EP*30F****		NONE	27,800	0.79	10.55				12.40
	EP*30F****	*8MPV075	TDR	28,800	0.79	11.00			13.00	
	EP*30F****	MV12F19****	TDR	28,400	0.79	11.20			13.50	
	EP*36B****		NONE	29,000	0.79	10.95				12.85
	EP*36B****	*8MPV050	TDR	29,000	0.79	10.95			12.85	
	EP*36B****	MV08B15****	TDR	29,200	0.79	11.20			13.50	
	EP*36F****		NONE	29,000	0.79	10.95				12.85
	EP*36F****	*8MPV075	TDR	29,400	0.79	11.20			13.50	
	EP*36F****	MV12F19****	TDR	29,600	0.79	11.50			14.00	
	EP*36J****		NONE	29,000	0.79	10.95				12.85
	EP*36J****	*8MPV100	TDR	29,600	0.79	11.20			13.50	
	EP*36J****	MV16J22****	TDR	29,600	0.79	11.70			14.00	
	EPP030****		NONE	26,800	0.79	10.20				11.95
	EPP036****		NONE	27,400	0.79	10.40				12.20
	EX*36B****		TXV	30,200	0.79	11.00		13.20		
	EX*36B****	*8MPV050	TDR & TXV	30,200	0.79	11.00	13.20			
	EX*36B****	MV08B15****	TDR & TXV	30,600	0.79	11.70	14.00			
	EX*36F****		TXV	30,200	0.79	11.00		13.20		
	EX*36F****	*8MPV075	TDR & TXV	30,600	0.79	11.50	14.00			
	EX*36F****	MV12F19****	TDR & TXV	30,800	0.79	11.70	14.00			
	EX*36J****		TXV	30,200	0.79	11.00		13.20		
	EX*36J****	*8MPV100	TDR & TXV	30,800	0.79	11.70	14.00			
	EX*36J****	*8MPV125	TDR & TXV	30,800	0.79	11.70	14.00			
	EX*36J****	*9MPV100	TDR & TXV	30,800	0.79	11.50	14.00			
	EX*36J****	MV16J22****	TDR & TXV	30,800	0.79	12.00	14.00			
	FWM30****		TDR	29,600	0.79	11.00			13.20	
H2A336GKA	EBP36****		TDR	35,600	0.76	10.95			12.55	
	EBP42****		TDR	36,000	0.76	11.20			12.90	
	EBV36****		TDR & TXV	36,400	0.76	11.20	13.50			
	EBV48****		TDR & TXV	36,000	0.76	11.70	14.00			
	EBV60****		TDR & TXV	36,000	0.76	11.70	14.00			
	EBX36****		TDR & TXV	36,000	0.76	11.20	12.90			
	EL*36B****		NONE	33,400	0.76	10.80				12.40
	EL*36B****	*8MPV050	TDR	33,400	0.76	10.80			12.45	
	EL*36B****	MV08B15****	TDR	34,200	0.76	11.00			12.65	
	EL*36F****		NONE	34,000	0.76	10.70				12.35
	EL*36F****	*8MPV075	TDR	34,200	0.76	11.00			12.65	
	EL*36F****	*8MPV050	TDR	33,800	0.76	10.35			11.85	
	EL*36F****	*9MPV075	TDR	34,000	0.76	10.75			12.35	
	EL*36F****	MV12F19****	TDR	34,600	0.76	11.00			13.20	
	EL*42F****		NONE	35,000	0.76	11.15				12.85
	EL*42F****	*8MPV075	TDR	36,400	0.76	11.00			13.00	
	EL*42F****	*8MPV050	TDR	34,800	0.76	11.00			12.90	
	EL*42F****	*9MPV075	TDR	34,800	0.76	11.00			13.20	
	EL*42F****	MV12F19****	TDR	35,800	0.76	11.20			13.50	
	EMH36F****		NONE	34,000	0.76	10.70				12.35
	EMH42F****		NONE	35,000	0.76	11.15				12.85
	EP*36B****		NONE	33,400	0.76	10.80				12.40
	EP*36B****	*8MPV050	TDR	33,400	0.76	10.80			12.45	
	EP*36B****	MV08B15****	TDR	34,200	0.76	11.15			12.85	
	EP*36F****		NONE	34,000	0.76	10.70				12.35
	EP*36F****	*8MPV075	TDR	34,200	0.76	11.00			12.65	
	EP*36F****	*9MPV050	TDR	33,600	0.76	10.85			12.50	
	EP*36F****	*9MPV075	TDR	34,000	0.76	10.75			12.35	
	EP*36F****	MV12F19****	TDR	34,600	0.76	11.00			13.20	
	EP*36J****		NONE	34,000	0.76	10.70				12.35
	EP*36J****	*8MPV100	TDR	34,400	0.76	11.00			13.00	
	EP*36J****	*8MPV125	TDR	34,400	0.76	11.00			13.20	
	EP*36J****	MV16J22****	TDR	34,600	0.76	11.20			13.50	
	EP*42F****		NONE	35,000	0.76	11.15				12.85
	EP*42F****	*8MPV075	TDR	35,400	0.76	11.00			13.00	
	EP*42F****	MV12F19****	TDR	35,800	0.76	11.20			13.50	

– continued on next page –

COOLING PERFORMANCE FOR COMBINATION RATINGS (continued)
Obsolete Indoor Models

Outdoor Model	Obsolete Indoor Model	Furnace Model	Factory Installed	Cooling (95 °F)			SEER			
				BTU/hr	S/T	EER	factory	w/ field TDR	w/ field R-22 TXV	w/ field R-22 TXV + TDR
H2A336GKA (continued)	EP*42J****		NONE	35,400	0.76	11.15				12.80
	EP*42J****	*8MPV100	TDR	35,000	0.76	11.30			13.00	
	EP*42J****	MV16J22****	TDR	35,000	0.76	11.20			13.50	
	EPP036****		NONE	31,400	0.76	10.20				11.75
	EX*36B****		TXV	35,800	0.76	11.00		13.00		
	EX*36B****	*8MPV050	TDR & TXV	35,400	0.76	11.00	13.00			
	EX*36B****	MV08B15****	TDR & TXV	36,200	0.76	11.20	13.50			
	EX*36F****		TXV	35,800	0.76	11.00		13.00		
	EX*36F****	*8MPV075	TDR & TXV	36,200	0.76	11.00	13.20			
	EX*36F****	MV12F19****	TDR & TXV	36,600	0.76	11.20	13.50			
	EX*36J****		TXV	36,400	0.76	11.25		12.95		
	EX*36J****	*8MPV100	TDR & TXV	36,600	0.76	11.20	13.50			
	EX*36J****	MV16J22****	TDR & TXV	36,800	0.76	11.50	14.00			
	EX*42F****		TXV	36,800	0.76	11.00		13.20		
	EX*42F****	*8MPV075	TDR & TXV	37,000	0.76	11.20	13.50			
	EX*42F****	MV12F19****	TDR & TXV	37,200	0.76	11.50	14.00			
	EX*42J****		TXV	36,800	0.76	11.00		13.00		
	EX*42J****	*8MPV100	TDR & TXV	37,200	0.76	11.50	14.00			
	EX*42J****	MV16J22****	TDR & TXV	37,200	0.76	11.70	14.00			
H2A342GKA	EBP42****		TDR	41,000	0.75	10.70			12.55	
	EBP48****		TDR	42,000	0.75	10.90			12.80	
	EBV48****		TDR & TXV	43,500	0.75	11.50	14.00			
	EBV60****		TDR & TXV	44,500	0.75	11.70	14.00			
	EBX48****		TDR & TXV	43,000	0.75	11.00	13.20			
	EL*42F****		NONE	39,000	0.75	10.65				12.50
	EL*42F****	*8MPV075	TDR	39,500	0.75	10.80			12.70	
	EL*42F****	*9MPV075	TDR	39,000	0.75	10.70			12.60	
	EL*48F****		NONE	40,500	0.75	10.80				12.65
	EL*48F****	*8MPV075	TDR	40,500	0.75	10.85			12.70	
	EL*48F****	*9MPV075	TDR	39,500	0.75	10.90			12.80	
	EMH42F****		NONE	38,500	0.75	10.65				12.50
	EMH48F****		NONE	40,500	0.75	10.80				12.80
	EP*42F****		NONE	39,000	0.75	10.85				12.50
	EP*42F****	*8MPV075	TDR	39,500	0.76	10.80			12.70	
	EP*42F****	*9MPV075	TDR	39,000	0.75	10.70			12.60	
	EP*42J****		NONE	39,500	0.75	10.70				12.55
	EP*42J****	*8MPV100	TDR	38,500	0.75	10.70			12.60	
	EP*42J****	*8MPV125	TDR	39,500	0.75	10.70			12.55	
	EP*42J****	*9MPV100	TDR	37,600	0.75	10.60			12.45	
	EP*42J****	MV16J22****	TDR	39,500	0.75	11.00			12.95	
	EP*48F****		NONE	40,500	0.75	10.80				12.65
	EP*48F****	*8MPV075	TDR	40,500	0.75	10.85			12.70	
	EP*48F****	*9MPV075	TDR	39,500	0.75	10.90			12.80	
	EP*48J****		NONE	41,000	0.75	10.90			12.75	
	EP*48J****	*8MPV100	TDR	41,500	0.75	11.00			13.20	
	EP*48J****	*8MPV125	TDR	41,500	0.75	11.20			13.50	
	EP*48J****	*9MPV100	TDR	41,000	0.75	11.00			13.20	
	EP*48J****	MV16J22****	TDR	41,500	0.75	11.20			13.50	
	EP*48L****		NONE	41,000	0.75	10.90				12.75
	EP*48L****	*9MPV125	TDR	41,500	0.75	11.00			12.95	
	EP*48N****		NONE	41,000	0.75	10.90				12.75
	EP*48N****	MV20N26****	TDR	41,500	0.75	11.50			14.00	
	EX*42F****		TXV	41,000	0.75	11.00		13.00		
	EX*42F****	*8MPV075	TDR & TXV	41,500	0.75	11.00	13.00			
	EX*42F****	*9MPV075	TDR & TXV	40,500	0.75	11.00	13.20			
	EX*42J****		TXV	41,000	0.75	11.00		13.00		
	EX*42J****	*8MPV100	TDR & TXV	42,000	0.75	11.00	13.20			
	EX*42J****	*8MPV125	TDR & TXV	42,000	0.75	11.20	13.50			
	EX*42J****	*9MPV100	TDR & TXV	41,500	0.75	11.00	13.20			
	EX*42J****	MV16J22****	TDR & TXV	42,500	0.75	11.50	14.00			
	EX*48J****		TXV	42,000	0.75	11.00		12.95		
	EX*48J****	*9MPV125	TDR & TXV	42,000	0.75	11.00	13.20			
	EX*48L****		TXV	42,000	0.75	11.00		12.95		
	EX*48L****	*9MPV125	TDR & TXV	42,000	0.75	11.00	13.20			
	EX*48N****		TXV	42,000	0.75	11.00		12.95		
	EX*48N****	MV20N26****	TDR & TXV	42,000	0.75	11.50	14.00			

– continued on next page –

1-879 P.016/017 F-922

COOLING PERFORMANCE FOR COMBINATION RATINGS (continued)
Obsolete Indoor Models

Outdoor Model	Obsolete Indoor Model	Furnace Model	Factory Installed	Cooling (95 °F)			SEER			
				BTU/hr	S/T	EER	factory	w/ field TDR	w/ field R-22 TXV	w/ field R-22 TXV + TDR
H2A348GKA	EBP48****		TDR	46,500	0.76	10.95			12.50	
	EBP60****		TDR	47,500	0.76	11.05			12.60	
	EBV48****		TDR & TXV	48,000	0.76	11.20	13.50			
	EBV60****		TDR & TXV	49,000	0.76	11.50	14.00			
	EBX48****		TDR & TXV	48,000	0.76	11.00	13.00			
	EBX60****		TDR & TXV	48,500	0.76	11.00	13.20			
	EL*48F****		NONE	43,500	0.76	10.90				12.45
	EL*60J****		NONE	46,000	0.76	11.10				12.70
	EL*60J****	*8MPV100	TDR	46,500	0.76	11.25			12.90	
	EL*60J****	*8MPV125	TDR	46,500	0.76	11.00			13.00	
	EL*60J****	*9MPV100	TDR	46,000	0.76	10.80			12.35	
	EL*60J****	MV16J22****	TDR	47,000	0.76	11.20			13.50	
	EMH48F****		NONE	44,000	0.76	11.00				12.55
	EP*48F****		NONE	43,500	0.76	10.90				12.45
	EP*48J****		NONE	44,500	0.76	11.00				12.55
	EP*48J****	*8MPV100	TDR	45,000	0.76	11.00			12.55	
	EP*48J****	*8MPV125	TDR	45,000	0.76	11.20			12.80	
	EP*48J****	*9MPV100	TDR	44,000	0.76	11.20			12.80	
	EP*48J****	MV16J22****	TDR	45,500	0.76	11.00			13.20	
	EP*48L****		NONE	44,500	0.76	11.00				12.55
	EP*48L****	*9MPV125	TDR	45,000	0.76	11.10			12.70	
	EP*48N****		NONE	44,500	0.76	11.00				12.55
	EP*48N****	MV20N26****	TDR	46,000	0.76	11.00			13.20	
	EP*60J****		NONE	46,000	0.76	11.10				12.70
	EP*60J****	*8MPV100	TDR	46,500	0.76	11.25			12.90	
	EP*60J****	*8MPV125	TDR	46,500	0.76	11.00			13.20	
	EP*60J****	*9MPV100	TDR	45,000	0.76	11.00			13.20	
	EP*60J****	MV16J22****	TDR	47,000	0.76	11.20			13.50	
	EP*60L****		NONE	46,000	0.76	11.10				12.70
	EP*60L****	*9MPV125	TDR	46,000	0.76	11.00			13.00	
	EP*60N****		NONE	46,000	0.76	11.10				12.70
	EP*60N****	MV20N26****	TDR	47,000	0.76	11.20			13.50	
	EX*48J****		TXV	45,500	0.76	11.15		12.75		
	EX*48J****	*9MPV125	TDR & TXV	45,500	0.76	11.25	12.90			
	EX*48L****		TXV	45,500	0.76	11.15		12.75		
	EX*48L****	*9MPV125	TDR & TXV	45,500	0.76	11.25	12.90			
	EX*48N****		TXV	45,500	0.76	11.15		12.75		
	EX*48N****	MV20N26****	TDR & TXV	46,500	0.76	11.20	13.50			
	EX*60L****		TXV	48,500	0.76	11.00		13.00		
	EX*60L****	*9MPV125	TDR & TXV	48,500	0.76	11.20	13.50			
	EX*60N****		TXV	48,500	0.76	11.00		13.20		
	EX*60N****	MV20N26****	TDR & TXV	49,000	0.76	11.50	14.00			
H2A360GKA	EBP60****		TDR	56,500	0.78	10.60			12.10	
	EBV60****		TDR & TXV	57,000	0.78	11.20	13.50			
	EBX60****		TDR & TXV	56,500	0.78	11.00	13.00			
	EL*60J****		NONE	53,500	0.78	10.75				12.35
	EL*60J****	*8MPV100	TDR	53,000	0.78	10.90			12.50	
	EL*60J****	*8MPV125	TDR	53,500	0.78	10.80			12.40	
	EL*60J****	*9MPV100	TDR	52,000	0.78	11.00			12.60	
	EL*60J****	MV16J22****	TDR	54,500	0.78	11.00			12.65	
	EP*60J****		NONE	53,500	0.78	10.75				12.35
	EP*60J****	*8MPV100	TDR	53,000	0.78	10.90			12.50	
	EP*60J****	*8MPV125	TDR	53,500	0.78	10.80			12.40	
	EP*60J****	*9MPV100	TDR	52,000	0.78	11.00			12.60	
	EP*60J****	MV16J22****	TDR	54,500	0.78	11.00			12.65	
	EP*60L****		NONE	53,500	0.78	10.75				12.35
	EP*60L****	*9MPV125	TDR	53,000	0.78	10.95			12.55	
	EP*60N****		NONE	53,500	0.78	10.75				12.30
	EP*60N****	MV20N26****	TDR	54,500	0.78	11.10			12.75	
	EX*60L****		TXV	57,000	0.78	11.00		13.00		
	EX*60L****	*9MPV125	TDR & TXV	56,000	0.78	11.00	13.20			
	EX*60N****		TXV	57,000	0.78	11.00		13.00		
	EX*60N****	MV20N26****	TDR & TXV	57,500	0.78	11.20	13.50			

03/10/2006 FRI 12:21 [JOB NO. 6084] 016

OUTDOOR UNIT MODEL NUMBER IDENTIFICATION GUIDE (single phase)

Digit Position:	1	2	3	4	5, 6	7	8	9	10	11	12
Example Part Number:	H	2	A	3	18	G	K	A	1	0	0

N = Non-Branded
H = Arcoaire — **BRANDING**

2 = R-22
4 = R-410A — **REFRIGERANT**

A = Air Conditioner
H = Heat Pump — **TYPE**

3 = 13 SEER 6 = 16 SEER
4 = 14 SEER 7 = 17 SEER
5 = 15 SEER 8 = 18 SEER — **NOMINAL EFFICIENCY**

18 = 18,000 BTUH = 1½ tons
24 = 24,000 BTUH = 2 tons
30 = 30,000 BTUH = 2½ tons
36 = 36,000 BTUH = 3 tons
42 = 42,000 BTUH = 3½ tons
48 = 48,000 BTUH = 4 tons
60 = 60,000 BTUH = 5 tons — **NOMINAL CAPACITY**

A = Standard Grille
G = Coil Guard Grille — **FEATURES**

K = 208/230-1-60 — **VOLTAGE**

Sales Code

Engineering Revision

Extra Digit

Extra Digit

ACCESSORIES PART NUMBER IDENTIFICATION GUIDE

Digit Position:	1	2	3	4	5	6, 7	8, 9
Example Part Number:	N	A	S	A	0	01	CH

N = Non-Branded — **BRANDING**

A = Accessory — **PRODUCT GROUP**

S = Split System (AC & HP) — **KIT USAGE**

A = Original
B = 2nd Generation — **MAJOR SERIES**

0 = Generic or Not Applicable
2 = R-22
4 = R-410A — **REFRIGERANT**

Product Identifier Number

AC = Anti-Cycle Timer LA = Low Ambient SC = Start Component TD = Time Delay
CH = Crankcase Heater LS = Liq. Line Solonoid SF = Support Feet WS = Winter Start Control
FS = Freeze Stat PS = Pressure Switch SJ = Sound Jacket — **TYPE OF KIT**

International Comfort Products, LLC
Lewisburg, Tennessee 37091
www.arcoairedir.com

Specifications subject to change without notice.

RFI#40

SUBSTITUTION REQUEST FORM

TO: **BARTON MALOW COMPANY/KINGSCOTT ASSOCIATES**
1301 Boyd
Troy, MI 48083
PH – 248-823-4631 FAX – 248-823-4672

We hereby submit for your consideration the following product instead of the specified item for the above Project:

DRAWING NO.: ME 1.2 **DRAWING NAME:** MECH PLANS

SPEC. SECT.	SPEC. NAME	PARAGRAPH	SPECIFIED ITEM
15785-2	AIR/AIR ENERGY RECOVERY	2.1 (A)	INNOVENT

Proposed Substitution:

Attached complete information on changes to Drawings and/or Specifications which proposed substitution will require for its proper installation.

Submit with request all necessary samples and substantiating data to prove equal quality and performance to that which is specified. Clearly mark manufacturer's literature to indicate equality in performance.

CERTIFICATION OF EQUAL PERFORMANCE AND ASSUMPTION OF LIABILITY FOR EQUAL PERFORMANCE

The undersigned states that the function, appearance and quality are equivalent or superior to the specified item.

Submitted by:

KEVIN REID / [signature] SALES ENGINEER

Signature Title

THERMALNETICS, INC

Firm

3500 W. ELEVEN MILE RD BERKLEY, MI

Address

248-336-5546 12-1-06

Telephone Date

Signature shall be by person having authority to legally bind his/her firm to the above terms. Failure to provide legally binding signature will result in retraction of approval.

12.07.06 PENDING REVIEW & OWNER APPROVAL. .... PLS. CLARIFY BID. -KSI(BML)

#3

For use by Architect	For Use by Owner:
____ Accepted ____ Accepted as Noted	____ Accepted ____ Accepted as Noted
____ Not Accepted ____ Received Too Late	____ Not Accepted ____ Received Too Late
____ Insufficient Data Received	____ Insufficient Data Received
By: _____	By: _____
Date: _____	Date: _____

Fill in Blanks Below: (Attach additional sheets as required)

A. Does the Substitution affect dimensions shown on Drawings?
Yes ____ No X If yes, clearly indicate changes: _____

B. Will the undersigned pay for changes to the building design, including engineering and detailing costs caused by the requested substitution?
Yes ____ No X If no, fully explain: NO COST CHANGE INVOLVED

C. What affect does substitution have on other contracts or other trades?
NONE

D. What affect does substitution have on the delivery and construction schedule? NONE

E. Manufacturer's warranties of the proposed and specified items are: X Same ____ Different
If Different, explain on an Attachment

F. Reason for Request: NOT NAMED

G. Itemized comparison of specified item(s) with the proposed substitution; list significant variations:
SEE CATALOG

H. Accurate cost data comparing proposed substitution with product specified:
PROVIDED WITH BID

I. This substitution will amount to a credit or an extra cost to the Owner of:
PROVIDED WITH BID dollars
($_____)

END OF SECTION 01630

Innovent
Air Handling Equipment

PremiSys MV

Energy Recovery Ventilator
Ideal for Classrooms and Small Offices

Commercial and Institutional
Applications 300 to 800 cfm

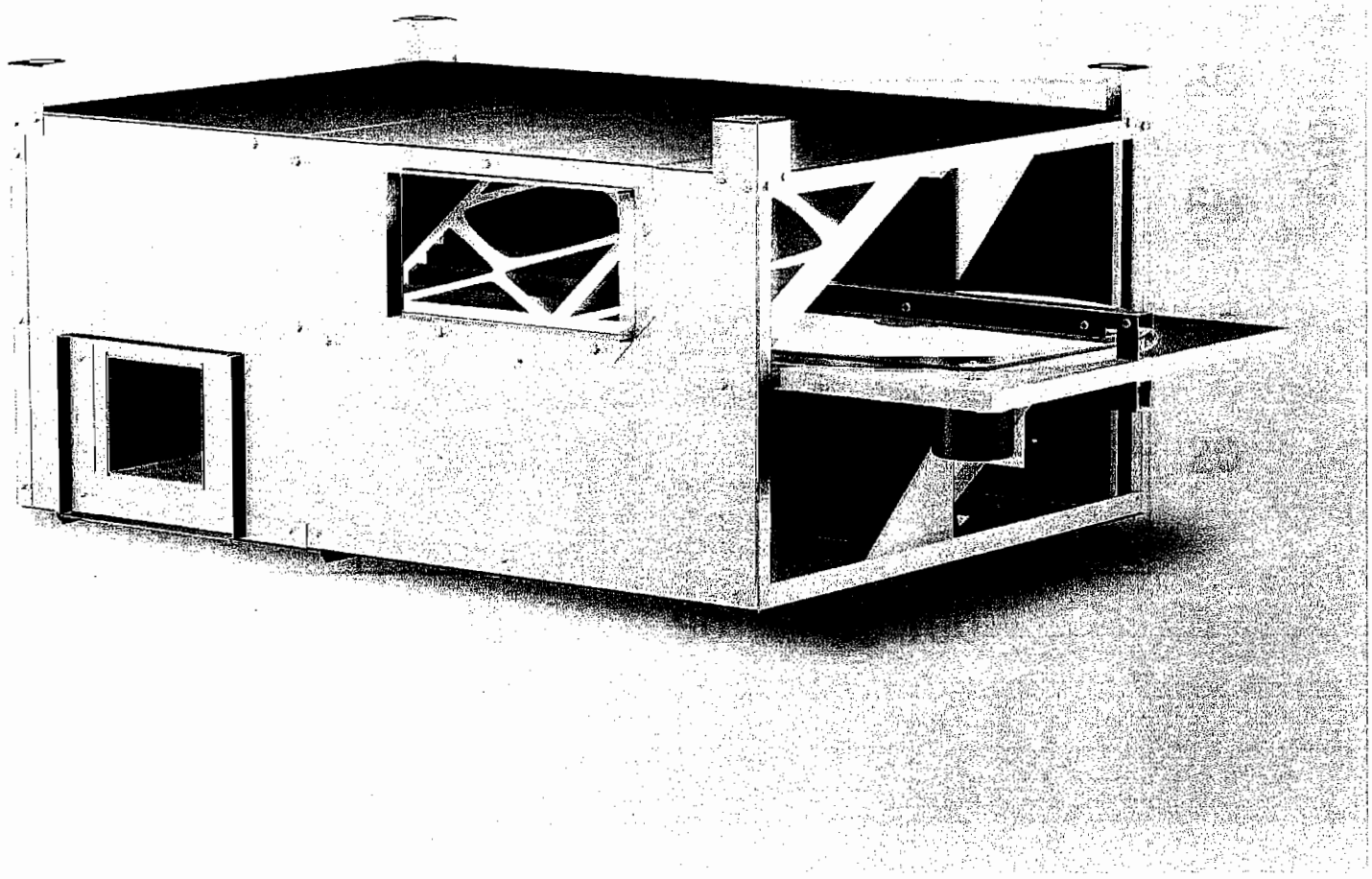

Economical and Compact Total Energy Recovery

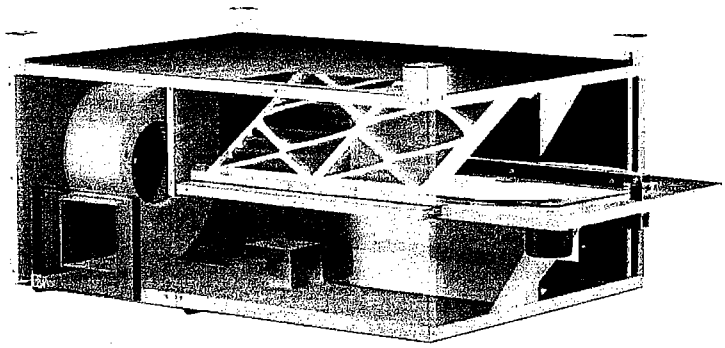

Innovent's PremiSys MV series delivers total energy recovery in a small package when a larger roof-top unit is not feasible. Two casing sizes accommodate airflows ranging from 300 to 800 cfm, 100% of which flows through a lightweight-polymer total energy wheel with permanently-bonded silica gel desiccant.

The MV series is designed to offer flexibility for installations where space is at a premium. Each casing can be ceiling-hung or pad-mounted, allowing installation above ceilings, under floors, or other restrictive spaces. In addition, the MV series operates on 115 VAC/60Hz/single-phase power, reducing the wiring and fusing required for larger units.

Typical Installation

The illustration shows an MV in a typical ceiling hung installation. Outdoor air is drawn through a model GRS roof-mounted gravity intake hood and pre-conditioned by the enthalpy wheel. Outdoor air is then supplied either to an air handler or directly to the space. Energy is recovered from stale room air before it is exhausted through a model WC wall cap.

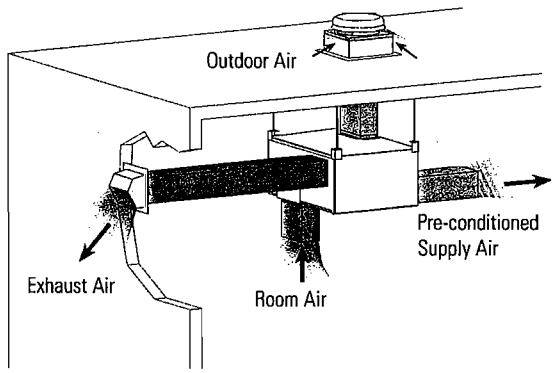

Intake and Discharge Locations

Both intake locations are capable of being field relocated to suit installation needs.

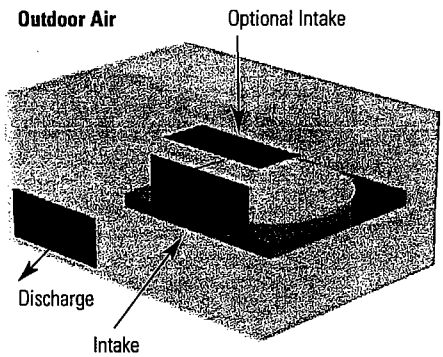

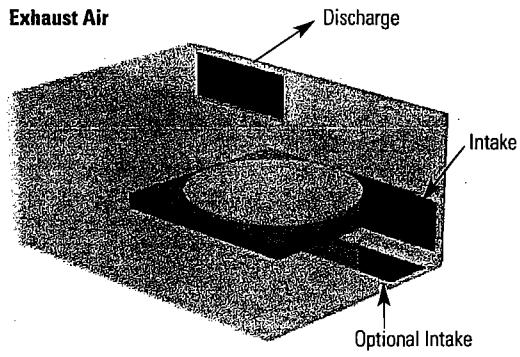

Performance Data

		External Static Pressure in Inches of WG								Sones @ 0.25 in. wg*
		0.125	0.250	0.375	0.500	0.625	0.750	0.875	1.00	
MV-450										
RPM										
1250	CFM	386	362	335	300	243	—	—	—	2.6
1680	CFM	542	512	480	442	402	352	294	227	3.6
MV-750										
RPM										
1250	CFM	693	678	657	631	597	559	527	497	5.9
1550	CFM	865	854	842	825	807	785	761	731	6.5

**Sone values are at a distance of 5 feet from the exhaust air intake.*

Intake and Exhaust Accessories

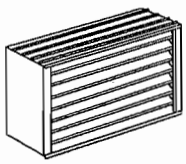

Model BV (Wall-Mounted)
- Intake or exhaust
- Anodized aluminum construction
- Built-in aluminum mesh insect screen

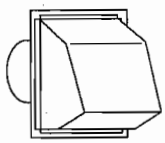

Model WC (Wall-Mounted)
- Exhaust only
- Aluminum construction
- Built-in damper

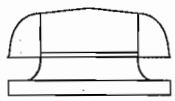

Model GRS (Roof-Mounted)
- Intake or exhaust
- All aluminum exterior construction
- Integral birdscreen
- For roof curb mounting

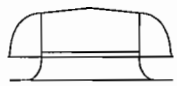

Model GRSF (Roof-Mounted)
- Intake or exhaust
- All aluminum exterior construction
- Integral birdscreen
- Built in flashing flange

Other Accessories

Speed Control
A solid state speed control is available for adjusting airflow to desired volume. One speed control is supplied for each outdoor air and exhaust air fan. Requires a 4x4 handy box by others.



Motion Detector
Model MBW is a wall-mounted passive infrared motion detector that automatically turns on the PremiSys MV when a change in temperature is sensed. The MV will automatically turn off after the room has been vacant past the adjustable time delay setting of one minute to 20 minutes. The detector must be installed in the line-of-sight of the subject personnel and requires a 2x4 handy box to be supplied by others.



Hanging Vibration Isolators
Vibration isolator kits are available for suspended installations. Kits include all hardware necessary to mount one unit, with the exception of threaded rods to be supplied by others. Brackets for mounting vibration isolators are factory installed on the unit.



Timed Exhaust Frost Control Kit
Timed Exhaust frost control kit includes an Outdoor Air Sensor and Timer for field installation. Timed Exhaust frost control turns the supply blower power off and on using field adjustable timer settings when outdoor air temperature falls below the frost threshold. Timed Exhaust is appropriate for climates with limited HVAC system operation when outdoor air temperatures are below 0°F.

General: Energy Recovery Ventilator shall be as manufactured by Innovent or approved equal, provided all specifications are met. Units shall be listed per ANSI/UL 1995, Heating and Cooling Equipment. Performance shall be as scheduled on plans.

Casing and Access: Unit shall be constructed of G90 galvanized steel. All components shall be easily accessible through removable access panels. Access to filters and energy wheel shall not require tools. Energy recovery wheel shall be mounted in a slide-out track for ease of inspection, removal and cleaning. Housing shall be insulated with 1/2-inch insulation. Outdoor air and exhaust air discharges shall have integral backdraft dampers. Duct adapters shall be factory installed on all four intake/discharge ports.

Intake Locations: Both the outdoor air and exhaust air intakes shall be designed for optional relocation in the field. Alternate intake location on adjacent side of the unit enables duct installation flexibility.

Energy Recovery Wheel: Wheel shall be of the enthalpy type for both sensible and latent heat recovery, and be designed to insure laminar flow. Energy transfer ratings shall be tested in accordance with ARI Standard 1060. Desiccant shall be silica gel for maximum latent energy transfer. Wheel shall be constructed of light weight polymer media to minimize shaft and bearing loads. Polymer media shall be mounted in a stainless steel rotor for corrosion resistance. Silica gel desiccant shall be permanently bonded to wheel media to retain latent heat recovery after cleaning. Wheels with sprayed on desiccant coatings are not acceptable. Wheels with desiccant applied after wheel formation are not acceptable. Energy recovery device shall transfer moisture entirely in the vapor phase.

Energy recovery drive belt material shall be high strength urethane and shall be factory installed in a pre-stretched state, eliminating the need for field belt tension adjustment. Link style belts are not acceptable.

Fans and Motors: Fans shall be double width, double inlet centrifugal forward curved type. Fans shall be statically and dynamically balanced. Fan motors shall be single phase, thermally protected and be compatible for use with speed controller.

Filters: The outdoor air shall be filtered with a 1-in. deep, 30% effective disposable filter. Filter rack shall be internal to the unit and factory installed.

Electrical: All internal electrical components shall be factory wired for single point power connection. All electrical components shall be UL listed, approved or classified where applicable and wired in accordance with the National Electrical Code.

Dimensions

	Dimensions (in.)			*Approx. weight (lb.)*	*Air flow capacity (cfm)*
	A	*B*	*C*		
MV-450	40	29	20	150	300-450
MV-750	46	36	22	210	450-800

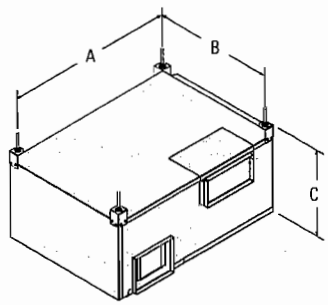

Warranty

Innovent Air Handling Equipment warrants this equipment to be free from defects in material and workmanship for a period of one year from the purchase date. The energy recovery wheel is warranted to be free from defects in material and workmanship for a period of five years from the purchase date. Any units or parts which prove defective during the warranty period will be replaced at our option when returned to our factory, transportation prepaid. Motors are warranted by the motor manufacturer for a period of one year. Should motors furnished by Innovent prove defective during this period, they should be returned to the nearest authorized motor service station. Innovent will not be responsible for any removal or installation costs. As a result of our commitment to continuous improvement, Innovent reserves the right to change specifications without notice.

© 2006 Innovent Air Handling Equipment www.innoventair.com

SUBSTITUTION REQUEST FORM

RFI#41

TO: **BARTON MALOW COMPANY/KINGSCOTT ASSOCIATES**
1301 Boyd
Troy, MI 48083
PH – 248-823-4631 FAX – 248-823-4672

We hereby submit for your consideration the following product instead of the specified item for the above Project:

DRAWING NO.:	ME-12	DRAWING NAME:	MECH PLANS

SPEC. SECT.	SPEC. NAME	PARAGRAPH	SPECIFIED ITEM
15785-3	AIR/AIR ENERGY RECOVERY EQUIPMENT	2.2 (A)	INNOVENT

Proposed Substitution:

Attached complete information on changes to Drawings and/or Specifications which proposed substitution will require for its proper installation.

Submit with request all necessary samples and substantiating data to prove equal quality and performance to that which is specified. Clearly mark manufacturer's literature to indicate equality in performance.

CERTIFICATION OF EQUAL PERFORMANCE AND ASSUMPTION OF LIABILITY FOR EQUAL PERFORMANCE

The undersigned states that the function, appearance and quality are equivalent or superior to the specified item.

Submitted by:

KEVIN REID / Kevin Reid — SALES ENGINEER

Signature — Title

THERMALNETICS, INC

Firm

3500 W. ELEVEN MILE RD BERKLEY, MI

Address

248-336-5546 — 12-1-06

Telephone — Date

Signature shall be by person having authority to legally bind his/her firm to the above terms. Failure to provide legally binding signature will result in retraction of approval.

12-07-06
PENDING REVIEW & OWNER APPROVAL
.... PLS CLARIFY BID.
-KS(BMC)

For use by Architect:	For Use by Owner:
____ Accepted ____ Accepted as Noted	____ Accepted ____ Accepted as Noted
____ Not Accepted ____ Received Too Late	____ Not Accepted ____ Received Too Late
____ Insufficient Data Received	____ Insufficient Data Received
By: _____	By: _____
Date: _____	Date: _____

Fill in Blanks Below: (Attach additional sheets as required)

A. Does the Substitution affect dimensions shown on Drawings?
Yes ____ No X If yes, clearly indicate changes: _____

B. Will the undersigned pay for changes to the building design, including engineering and detailing costs caused by the requested substitution?
Yes ____ No X If no, fully explain: NO COST CHANGE INVOLVED

C. What affect does substitution have on other contracts or other trades?
NONE

D. What affect does substitution have on the delivery and construction schedule? NONE

E. Manufacturer's warranties of the proposed and specified items are: X Same ____ Different
If Different, explain on an Attachment

F. Reason for Request: NOT NAMED

G. Itemized comparison of specified item(s) with the proposed substitution; list significant variations:
SEE CATALOG

H. Accurate cost data comparing proposed substitution with product specified:

I. This substitution will amount to a credit or an extra cost to the Owner of:
_____ dollars
($_____)

END OF SECTION 01630

Innovent
Air Handling Equipment

PremiSys PS

Pre-Engineered Energy Recovery Ventilators with Optional Heating and Cooling

Commercial and Institutional
Applications up to 10,000 cfm,
1.5 in. wg external static pressure

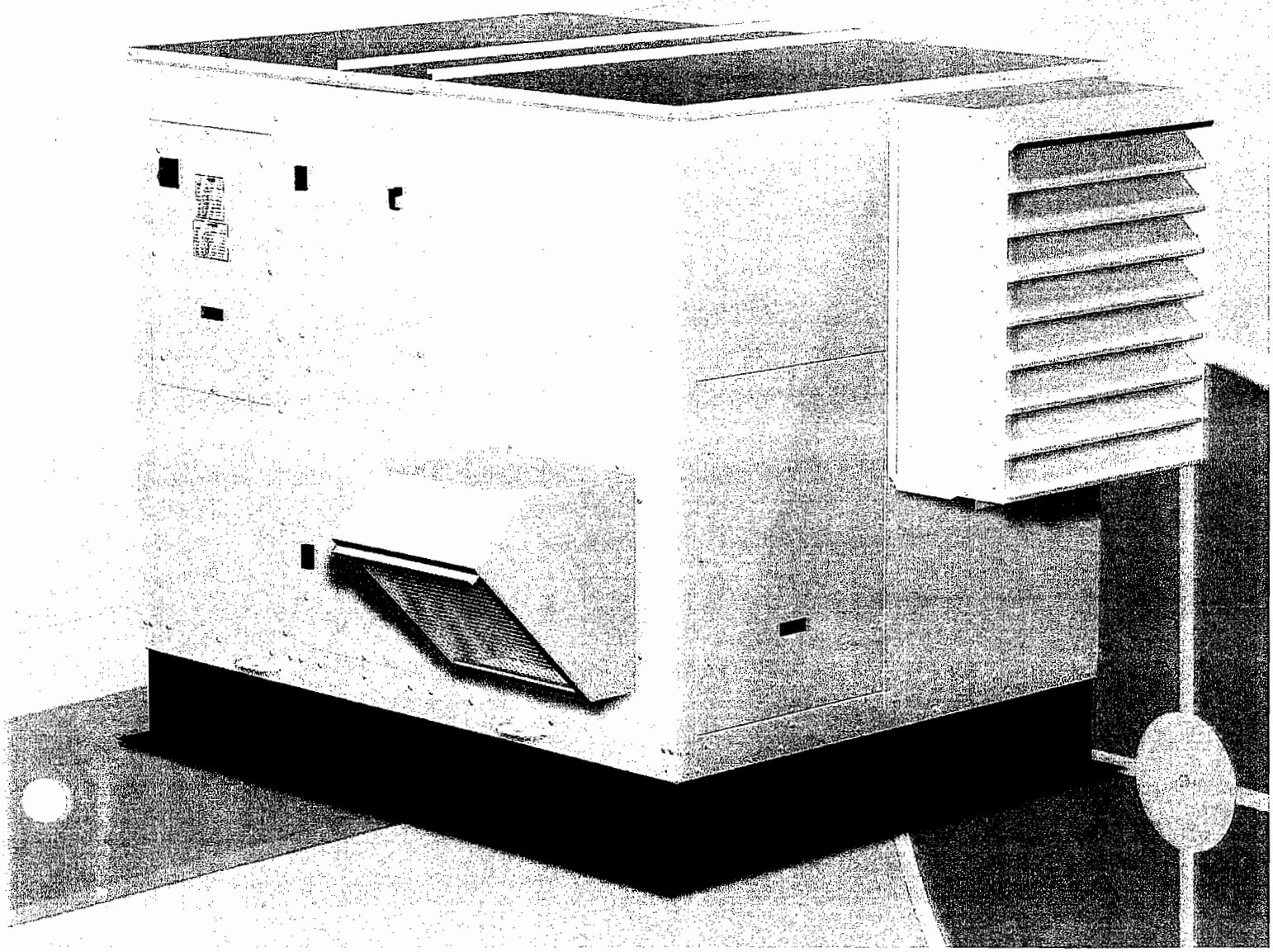

Total Energy Recovery with Heating and Cooling

General Capacities

- 1000-10,000 cfm of 100% outdoor air
- Up to 1.5 in. wg external static pressure

Energy Savings

- 3-4 tons of cooling saved per 1000 cfm
- 50-60 MBH of heating saved per 1000 cfm

Innovent's PremiSys PS Series ventilators combine energy recovery, heating, and cooling in a pre-configured package offering an alternative to custom air-handling equipment. Available from 1000 to 10,000 cfm, each PremiSys PS unit is built from a list of pre-engineered options—offering engineers custom air-handler flexibility with shorter lead times and lower initial costs.

Total Energy Wheel

At the heart of each PS unit is a total energy wheel constructed of an aluminum rotor coated with silica gel desiccant. Aluminum is used not only for high sensible energy transfer, but also because it provides a solid core for years of rotational service. Silica gel desiccant is bonded to the aluminum corrugate with a non-masking, porous adhesive that can be cleaned with low-pressure steam, compressed air, or mild detergents without degrading performance.

Summer Operation

The PremiSys PS Series pre-treats hot and humid outdoor air by transferring sensible and latent energy from the conditioned exhaust. The addition of integral cooling gives the PremiSys PS Series the ability to fully temper outdoor air to design temperature.

Winter Operation

Cold, dry outdoor air is heated and humidified by energy in the conditioned exhaust air through the rotating total energy wheel. Several heating options provide the ability to fully temper outdoor air into heated or neutral air.

Construction

PremiSys PS is built with features not typically found in common energy recovery equipment. Construction begins around the total energy wheel, placed in an upright position to allow space for coils and other tempering options. One-inch, double-wall construction is standard, providing improved strength and thermal efficiency over traditional single-wall ventilators with foil-faced insulation.

Air is drawn through standard two-inch pleated filters in both the supply and exhaust air streams by two adjustable, forward-curved, belt-driven fans. Wiring for all electrical components is through a central control center which includes:

- Non-fused disconnect for single point wiring
- Fan motor starters and overloads for component protection
- 24 VAC transformer and terminal strip for seamless controls integration

Model Nomenclature

PS-1042-45-10

PremiSys Ventilator	Series	Wheel Diameter	Housing Size	DX Tonnage (packaged DX only)
	-1000	-30	-20	-4 through -30
	-2000	-36	-45	
		-42	-55	
		-52	-90	
		-58		
		-74		

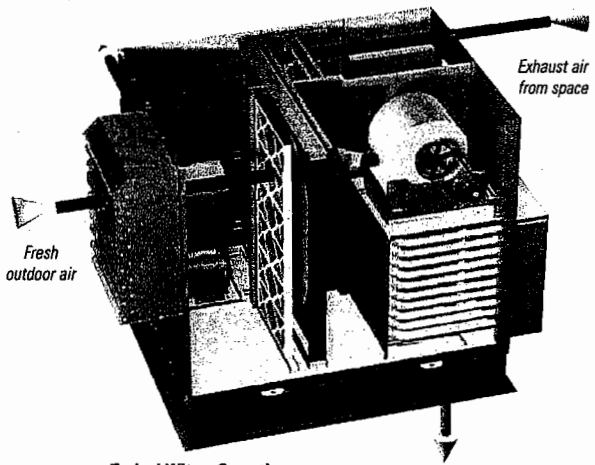

Typical Winter Operation

Heating Options

Indirect Gas Furnace
Each IG furnace is staged 2:1 with all controls included to maintain discharge air temperature. Furnace can operate with natural or LP gas.



Hot Water Coil
Coil is sized by Innovent to provide appropriate leaving air and water temperatures. Options include external or internal piping locations.

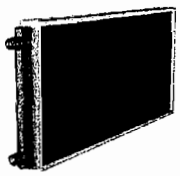

Electric Heat
Standard features include SCR control and separate non-fused disconnect. Available in 460, 230, and 208 VAC.

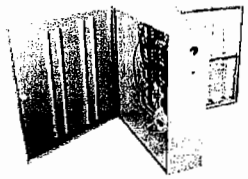

Cooling Options

Standard features on cooling coils include stainless steel drain pans to promote IAQ. Taller coils are split vertically with dual drainpans to prevent water carry-over.

Chilled Water Coil
Coil is appropriately sized with design conditions to cool and dehumidify to specified temperatures. Options include external or internal piping locations.

DX Coil
Many coils are available to handle R-22, R-410, R-134a, or other refrigerants for operation with any split-system condenser.

DX Coil with Packaged DX

In addition to the DX coil, the packaged DX option includes scroll compressors (dual staged above 10 tons), condensing section, expansion valve, internal piping, and an R-22 refrigerant charge.

For increased control and safety, the following items are also standard:
- Hot-gas bypass
- Head-pressure control
- High pressure manual reset cutout
- Low pressure auto-reset cutout

To add to the flexibility of the PremiSys PS with packaged DX, an option for hot-gas reheat is available from Innovent. The hot-gas reheat coil is incorporated into the DX circuit with an on/off or modulating 3-way valve to provide enough reheat for neutral air.

Packaged DX Benefits

- Single-source responsibility
- Reduced installation costs
- Single point power connection
- Reduced footprint requirements

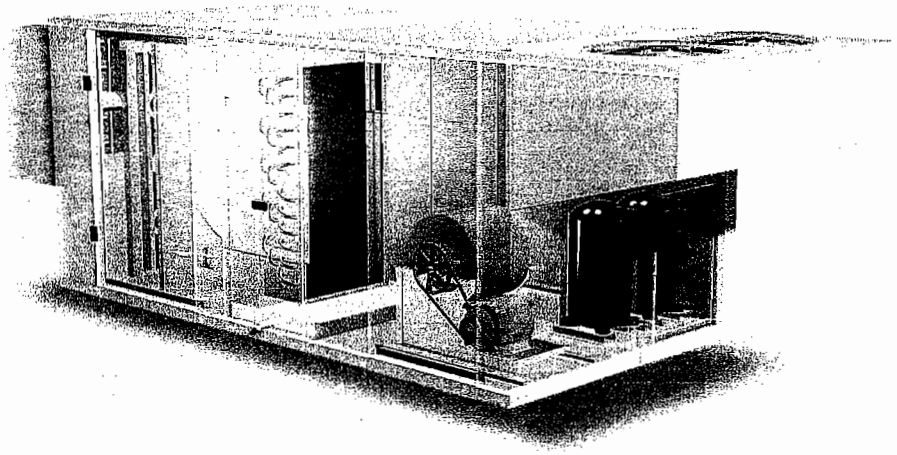

			External Static Pressure in Inches of WG							
			0.50	0.75	1.00	1.50	2.00	2.50	3.00	3.50
PS-1030/2030										
CFM	*OV*									
1000	1142	RPM	1141	1344	1498	—	—	—	—	—
		BHP	0.36	0.51	0.53	—	—	—	—	—
1300	1485	RPM	1265	1426	1578	1857	—	—	—	—
		BHP	0.55	0.72	0.90	1.05	—	—	—	—
1600	1828	RPM	1418	1553	1684	1934	2189	—	—	—
		BHP	0.87	1.03	1.21	1.67	2.17	—	—	—
PS-1036/2036										
CFM	*OV*									
1600	1828	RPM	1308	1446	1575	1816	—	—	—	—
		BHP	0.74	0.89	1.04	1.37	—	—	—	—
1900	2171	RPM	1453	1574	1691	1907	2108	2306	—	—
		BHP	1.10	1.27	1.45	1.80	2.19	2.66	—	—
2200	2514	RPM	1608	1717	1820	2020	2205	2375	—	—
		BHP	1.57	1.77	1.96	2.39	2.79	3.20	—	—
PS-1042/2042										
CFM	*OV*									
2200	2109	RPM	797	892	986	1166	1329	—	—	—
		BHP	0.68	0.81	0.96	1.29	1.65	—	—	—
2700	2588	RPM	900	977	1053	1209	1359	1494	1628	—
		BHP	1.10	1.25	1.40	1.77	2.16	2.56	3.03	—
3200	3068	RPM	1010	1079	1143	1274	1406	1533	1655	1768
		BHP	1.67	1.87	2.04	2.41	2.86	3.33	3.82	4.29
PS-1052/2052										
CFM	*OV*									
3200	2184	RPM	900	989	1071	1220	1360	1495	—	—
		BHP	1.17	1.34	1.53	1.92	2.35	2.83	—	—
3800	2593	RPM	1004	1083	1157	1297	1422	1542	1654	1769
		BHP	1.79	1.99	2.20	2.64	3.11	3.61	4.12	4.70
4400	3003	RPM	1114	1185	1252	1380	1499	1609	1713	1815
		BHP	2.60	2.85	3.08	3.57	4.09	4.64	5.18	5.78
PS-1058/2058										
CFM	*OV*									
4200	1989	RPM	749	832	906	1038	1155	—	—	—
		BHP	1.54	1.82	2.10	2.65	3.21	—	—	—
5100	2415	RPM	839	913	982	1107	1216	1318	1412	1520
		BHP	2.43	2.77	3.11	3.80	4.45	5.15	5.81	6.73
6000	2842	RPM	940	1003	1065	1181	1287	1382	1472	1558
		BHP	3.67	4.05	4.45	5.26	6.06	6.84	7.64	8.44
PS-1074/2074										
CFM	*OV*									
6000	2066	RPM	612	682	746	862	962	1058	—	—
		BHP	1.99	2.37	2.75	3.52	4.33	5.21	—	—
8000	2755	RPM	723	783	841	941	1036	1122	1202	1275
		BHP	3.91	4.41	4.95	5.94	6.97	7.98	9.08	10.14
10,000	3444	RPM	845	897	946	1040	1124	1201	1277	1348
		BHP	7.00	7.56	8.18	9.50	10.78	12.00	13.29	14.52

The air performance data on page 4 accounts for the pressure drop across the energy recovery wheel and the internal housing losses, but does not include pressure drop for filters or tempering options. Add filter and/or tempering option pressure drop (from tables below) to external static pressure to determine correct RPM and horsepower.

Filter Pressure Drop (30% eff.)

Model	*CFM*	*Pressure Drop (in. wg)*
PS-X030	1000	0.04
PS-X036	2200	0.22
PS-X042	2200	0.06
PS-X052	4400	0.24
PS-X058	4200	0.09
	6000	0.18
PS-X074	6000	0.10
	10,000	0.27

Tempering Options Pressure Drop

Model	*CFM*	*Cooling Coil (in. wg)*	*Heating Coil (in. wg)*	*Indirect Gas (in. wg)*
PS-X030	1000	0.17	0.02	0.03
PS-X036	2200	0.62	0.08	0.13
PS-X042	2200	0.31	0.04	0.09
PS-X052	4400	0.66	0.08	034
PS-X058	4200	0.38	0.04	0.10
	6000	0.64	0.08	0.26
PS-X074	6000	0.28	0.03	0.24
	10,000	0.66	0.08	0.55

Note: Coil data assumes six row cooling coils and one row heating coils. Cooling coil data is for PS-2000 models only.

Note to data on page 4: Gross supply air performance ratings (airflow, pressure, and power) are at port 2 with port 1, port 3 and port 4 at 0.0 in. wg. Gross exhaust air performance ratings (airflow, pressure, and power) are to port 3 with port 1, port 2 and port 4 at 0.0 in. wg. Power rating (BHP) does not include drive losses. Performance ratings do not include the effects of appurtenances in the airstream.

Intake and Discharge Options

The PremiSys PS series is available in many airflow configurations for custom indoor and outdoor installations. Outdoor units are typically specified with a louvered weather hood for outdoor air intake, exhaust hood with integral back-draft damper, and Innovent's *Permatector*™ exterior finish. All units are fully caulked for air and water leakage regardless of indoor or outdoor use. Refer to the table below for outdoor air (OA) and exhaust air (EA) configurations.

	Bottom	*Top*	*Side*	*End*
OA Intake		X		X[4]
OA Discharge	X[3]	X	X[1]	X[2]
EA Intake	X[3]	X		X
EA Discharge		X	X[4]	X

*[1]Side OA Discharge is **only** available with the Indirect Gas (IG) heater.*
*[2]End OA Discharge is **not** available with the Indirect Gas (IG) heater.*
[3]Package DX option limits OA Discharge and EA Intake to Bottom.
[4]Standard OA Intake and EA Discharge locations for outdoor installations.

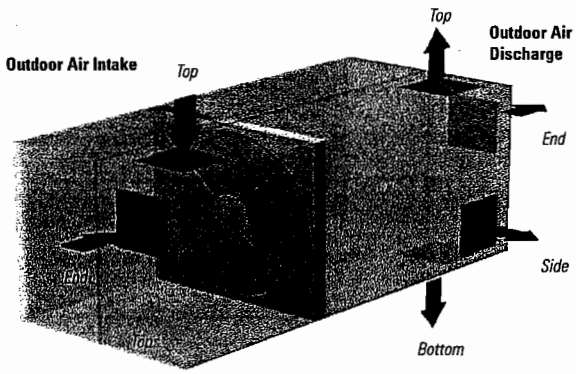

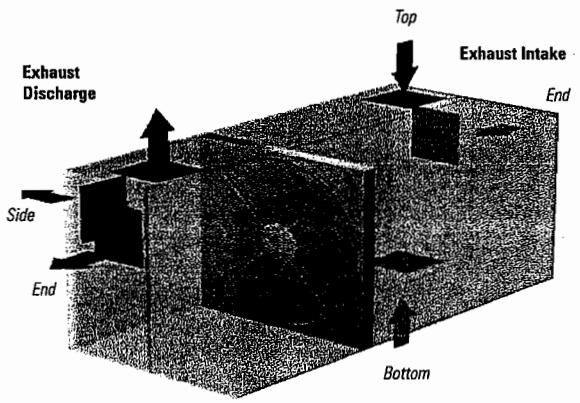

Controls

Additional Accessories

- Roof curbs
- External finishes
- Weatherhood
- Motorized dampers
- Spare filters
- Spare belts

PremiSys PS models are designed for integration into new or existing control schemes. Units are typically controlled through a unitary controller, programmable thermostat, BMS system, or other third party source. Innovent offers several factory-supplied options, from basic sequence control to full DDC packages. Below are suggested sequences that can be selected with or without Innovent's DDC controller.

Economizer

An integral economizer option is available to reduce energy consumption when free cooling is available. If a call for cool is given and the outdoor air is below 55F (field adjustable), total energy wheel will respond in one of two methods:

Stop Wheel

Wheel rotation ceases and outdoor air is allowed to enter into conditioned space. When the call for cool is de-energized, wheel begins rotating at normal speed. Controls may be based on temperature or enthalpy settings from factory.

Modulate Wheel

Wheel speed is modulated with a VFD to maintain 55F supply air. Modulating wheel offers accurate temperature control for sensitive conditioned loads.

Frost Control

When operating in cold climates, frost control is highly recommended by Innovent. Frost is detected through an increase in pressure drop across wheel and when outdoor air is below a field-adjustable set point. Three methods are available to alleviate frost accumulation:

Timed Exhaust

When frost is detected, the supply air blower will turn off intermittently to allow wheel to defrost from warm exhaust air.

Modulate Wheel

A VFD slows energy wheel speed when frost is detected. When the rotation speed is reduced, the energy wheel is allowed ample time in exhaust airstream to defrost.

Electric Preheat

A small electric pre-heater warms outdoor air before entering the wheel when frost is detected.

Night Setback

The PremiSys PS Series can be converted from 100% outdoor air to 100% re-circulating air operation with the night setback option. This sequence relies on a damper placed in the outdoor/exhaust air partition, located between the total energy wheel and the cooling coil. When an unoccupied signal is detected, the following actions are taken:

- Night-setback damper opens
- Energy wheel is de-energized
- Outdoor air supply damper closes
- Exhaust fan is de-energized

When these steps are initiated, indoor air is recirculated through the PS unit and tempered to maintain space temperature.

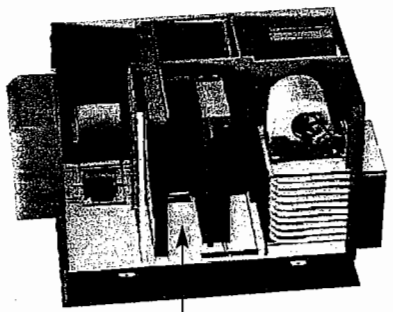

Night Setback Damper

Variable Air Volume

Both the supply and exhaust fans can be equipped with VFD's to provide flexible levels of supply and exhaust air. Common control sequences include CO2, multi-zone, or building pressurization control.

Additional Sensors

Many additional sensors are available factory mounted and wired to a 24 VAC terminal strip, including:

- Dirty filter sensors
- Rotation sensors
- Temperature sensors
- Humidity sensors

General: Energy Recovery Ventilator shall be as manufactured by Innovent or approved equal provided all specifications are met. Innovent Models PS-1000 and PS-2000 are used as the basis of design. Units shall be ETL listed and bear the ETL label. Performance shall be as scheduled on plans. Exhaust discharge and outside air intake shall not be located on the same side on roof top units.

Unit Casing and Frames: Unit shall be of internal frame, galvanized steel construction. Interior and exterior panels shall be constructed of G90 galvanized steel and create a 1" double wall. All exterior panels exposed to weather shall be a minimum of 18 gage galvanized steel and coated with a polyester urethane powder coat finish (*Permatector*™). Where top panels are joined there shall be an overlapping standing seam to ensure positive weather protection. All metal-to-metal seams shall be factory sealed requiring no caulking at job site. Unit base to be designed for curb mounting. Unit base shall overhang the curb for a positive seal against water run-off.

Insulation: The unit casing shall be insulated with 1-inch fiberglass. Insulation shall meet requirements of NFPA 90A and tested to meet UL 181 erosion requirements. Insulation to be enclosed in double wall construction. There shall be no exposed insulation.

Energy Recovery Wheel: Wheel shall provide both sensible and latent energy recovery. Energy transfer ratings shall be tested in accordance with ARI Standard 1060. Desiccant shall be silica gel for maximum latent energy transfer. Wheel shall be constructed of aluminum media. Plastic wheel construction not allowed.

Silica gel desiccant shall be permanently bonded to wheel media to retain latent heat capability after cleaning. Wheels with "sprayed-on" desiccant coatings are not acceptable. Wheels with desiccant applied after wheel formation are not acceptable. Energy recovery device shall transfer moisture entirely in the vapor phase. Energy recovery wheel shall be in the upright position.

Access Doors: All components shall be easily accessible through removable doors for exhaust fan, supply fan, filters, and damper compartments. Energy recovery wheels (smaller than 58 inches) shall be mounted in a slide-out track to ease inspection, removal, and cleaning.

Roof Curbs: Roof curb shall be supplied by unit manufacturer for field assembly. Curb shall consist of die formed galvanized steel sections. Curb shall be full perimeter type with gasketing provided for field installation between curb and unit base.

Fan Sections: Centrifugal fans shall be double width, double inlet, forward curved type. All blower wheels shall be statically and dynamically balanced. Ground and polished steel fan shafts shall be mounted in permanently lubricated, sealed ball bearing pillow blocks. Bearings shall be selected for a minimum (L10) life in excess of 100,000 hours at maximum cataloged operating speeds. Separate motors for exhaust and supply blowers shall be provided. Adjustable sheaves on belt-driven fans with motors less than 10 hp shall allow independent balancing of exhaust and supply airflow. Fan and motor assemblies are mounted to unit base with neoprene isolators as standard. Fans shall be located in draw-through position in reference to the energy recovery wheel.

Motors and Drives: Motors shall be energy efficient, EPACT compliant with ODP or TEFC enclosures. Motors shall be permanently lubricated, heavy-duty type, matched to the fan load and furnished at the specified voltage, phase, and enclosure. Drives shall be sized for a minimum of 150% of driven horsepower. Pulleys shall be of the fully machined cast type, keyed and securely attached to the fan wheel and motor shafts; 10 horsepower and less shall be supplied with an adjustable drive pulley. Energy wheel motors shall have integral overload protection.

Filters: Supply and exhaust air filters shall be 2-inch thick pleated fiberglass, 30% efficient and tested to meet UL Class 2. Filter racks shall be die-formed galvanized steel. Both air streams must be filtered upstream of energy wheel.

Electrical: All internal electrical components shall be factory wired for single point power connection. Units with electric reheat will be wired with independent power supply. All electrical components shall be ETL listed, approved, or classified where applicable and wired in compliance with the National Electrical Code.

Weatherproof, integral door interlocking disconnect switch, motor starters, control circuit fusing, control transformer for 24 VAC circuit, and terminal strip shall be supplied as standard components in the control center. Motor starters consisting of contactor and Class 20 electronic adjustable overload protection shall be provided for all fan motors.

Indirect Gas: Indirect fired gas furnace shall be 80% efficient, UL Certified and Listed per ANSI Z83.8-2002, C.G.A. approved per 2.6-2002 and have a blow through fan design. Furnace shall be capable of operation with natural or LP gas and have a power venting system. The burner and heat exchanger shall be constructed of aluminized steel. Standard furnace features shall include main gas pressure regulator, main gas valve, electronic staged or electronic modulating controls, direct spark ignition system, high limit and a 24 volt control transformer.

Electric Heat: Electric heat shall be ETL listed and circuit fused per NEC over 48 amps. Heater shall be multi-step controlled, factory wired and installed. Control will be 24 volt with class 2 transformer. Provide air flow switch to shut down heater if air ceases to flow across heater.

Hot Water Coil: Hot water coils shall be factory tested and rated in accordance with ARI 410. Coils shall have copper tubes with permanently expanded aluminum fins, 12 FPI or less.

Cooling Coil (PS-2000 models only): Direct expansion (DX) and chilled water coils shall be factory tested and rated in accordance with ARI 410. Coils shall have copper tubes with permanently expanded aluminum fins, 12 fpi or less. DX coils shall be equipped with distributors to receive expansion valves at the liquid connections (TXV by others). Cooling coils shall include stainless steel drain pan.

Condensing Section (PS-2000 with Packaged DX option): Unit shall be equipped with a pre-piped and wired air-cooled condensing unit. There shall be no field piping required. Compressors shall be hermetic scroll type, mounted on neoprene vibration isolation to minimize vibration transmission and noise. Compressors shall be mounted in an isolated compartment to be serviceable without affecting airflow. Compressors shall be equipped with a crankcase heater. The system shall come equipped with a thermal expansion valve to control refrigerant flow. System shall also be equipped with a liquid-line filter drier, high-pressure manual reset cutout, low-pressure auto-reset cutout, time delay relays for compressor protection, service/charging valves, and moisture indicating sight valve. Condenser fans shall be direct drive, statically and dynamically balanced, and AMCA Licensed for Air Performance. Multiple condensing fans shall be supplied to allow fan cycling for head pressure control. Units that are 10 tons and above shall have 2 stages of capacity control.

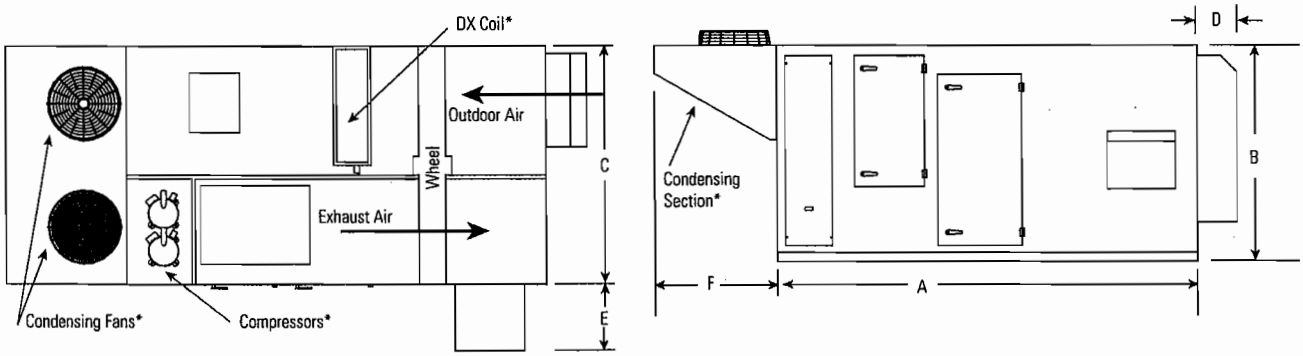

**Drawing illustrates PS-2000 with Packaged DX cooling option. Units without Packaged DX are dimensioned as shown but omit condensing section, condensing fans, and compressors.*

Unit dimensions (in inches)								
Model	*A*	*B*	*C*	*D*	*E*	*F*	*Approx. weight (in lbs.)**	*Airflow (cfm)*
Heating Only								
PS-1030/36	78	50	56	18	18	N/A	1500	1000-2200
PS-1042/52	86	69	66	16	20	N/A	2300	2200-4400
PS-1058	99	70	76	16	25	N/A	2400	4200-6000
PS-1074	111	85	96	16	27	N/A	4000	6000-10,000
Heating and Cooling (without Packaged DX)								
PS-2030/36	98	50	56	18	18	N/A	1800	1000-2200
PS-2042/52	106	69	66	16	20	N/A	2700	2200-4400
PS-2058	118	70	76	16	25	N/A	3100	4200-6000
PS-2074	131	85	96	16	27	N/A	5000	6000-10,000
Heating and Cooling with Packaged DX								
PS-2030/36	110	50	56	18	18	27	2150	1000-2200
PS-2042/52	121	69	66	16	20	38	3500	2200-4400
PS-2058	135	70	76	16	25	39	4450	4200-6000
PS-2074	153	85	96	16	27	46	6200	6000-10,000

**Actual weight is dependent upon unit configuration.*

Warranty

Innovent warrants this equipment to be free from defects in material and workmanship for a period of one year from the purchase date. The energy recovery wheel is warranted to be free from defects in material and workmanship for a period of five years from the purchase date. Any units or parts which prove defective during the warranty period will be replaced at our option when returned to our factory, transportation prepaid. Motors are warranted by the motor manufacturer for a period of one year. Should motors furnished by Innovent prove defective during this period, they should be returned to the nearest authorized motor service station. Innovent will not be responsible for any removal or installation costs. As a result of our commitment to continuous improvement, Innovent reserves the right to change specifications without notice.

© 2006 Innovent Air Handling Equipment www.innoventair.com

RFI# 42

SUBSTITUTION REQUEST FORM

TO: BARTON MALOW COMPANY/KINGSCOTT ASSOCIATES
1301 Boyd
Troy, MI 48083
PH – 248-823-4631 FAX – 248-823-4672

We hereby submit for your consideration the following product instead of the specified item for the above Project:

DRAWING NO.: _____ DRAWING NAME: _____

SPEC. SECT.	SPEC. NAME	PARAGRAPH	SPECIFIED ITEM
15145-2	DOMESTIC WATER PIPING	2.1. (A)	HAYES FLUID CONTROL VALVES

Proposed Substitution:

Attached complete information on changes to Drawings and/or Specifications which proposed substitution will require for its proper installation.

Submit with request all necessary samples and substantiating data to prove equal quality and performance to that which is specified. Clearly mark manufacturer's literature to indicate equality in performance.

CERTIFICATION OF EQUAL PERFORMANCE AND ASSUMPTION OF LIABILITY FOR EQUAL PERFORMANCE

The undersigned states that the function, appearance and quality are equivalent or superior to the specified item.

Submitted by:

KEVIN REID / Kevin Reid — SALES ENGINEER

Signature — Title

THERMALNETICS, INC

Firm

3500 W. ELEVEN MI RD BERKLEY, MI

Address

248-336-5546 — 12-1-06

Telephone — Date

Signature shall be by person having authority to legally bind his/her firm to the above terms. Failure to provide legally binding signature will result in retraction of approval.

12-07-06 PENDING REVIEW & OWNER APPROVAL.
.... PLS. CLARIFY BID.
-KS (BML)

For use by Architect:	For Use by Owner:
____ Accepted ____ Accepted as Noted	____ Accepted ____ Accepted as Noted
____ Not Accepted ____ Received Too Late	____ Not Accepted ____ Received Too Late
____ Insufficient Data Received	____ Insufficient Data Received
By: _____	By: _____
Date: _____	Date: _____

Fill in Blanks Below: (Attach additional sheets as required)

A. Does the Substitution affect dimensions shown on Drawings?
Yes ____ No X If yes, clearly indicate changes: _____

B. Will the undersigned pay for changes to the building design, including engineering and detailing costs caused by the requested substitution?
Yes ____ No X If no, fully explain: NO COST CHANGE INVOLVED

C. What affect does substitution have on other contracts or other trades?
NONE

D. What affect does substitution have on the delivery and construction schedule? NONE

E. Manufacturer's warranties of the proposed and specified items are: X Same ____ Different
If Different, explain on an Attachment

F. Reason for Request: NOT NAMED

G. Itemized comparison of specified item(s) with the proposed substitution; list significant variations:
SEE CATALOG

H. Accurate cost data comparing proposed substitution with product specified:
PROVIDED WITH BID

I. This substitution will amount to a credit or an extra cost to the Owner of:
PROVIDED WITH BID dollars
($_____)

END OF SECTION 01630

RFI#43

SUBSTITUTION REQUEST FORM

TO: **BARTON MALOW COMPANY/KINGSCOTT ASSOCIATES**
1301 Boyd
Troy, MI 48083
PH – 248-823-4631 FAX – 248-823-4672

We hereby submit for your consideration the following product instead of the specified item for the above Project:

DRAWING NO.: _____ **DRAWING NAME:** _____

SPEC. SECT.	SPEC. NAME	PARAGRAPH	SPECIFIED ITEM
15181-4	HYDRONIC PIPING	2-5(B) VALVES	HAYES FLUID CONTROLS

Proposed Substitution:

Attached complete information on changes to Drawings and/or Specifications which proposed substitution will require for its proper installation.

Submit with request all necessary samples and substantiating data to prove equal quality and performance to that which is specified. Clearly mark manufacturer's literature to indicate equality in performance.

CERTIFICATION OF EQUAL PERFORMANCE AND ASSUMPTION OF LIABILITY FOR EQUAL PERFORMANCE

The undersigned states that the function, appearance and quality are equivalent or superior to the specified item.

Submitted by:

KEVIN REID / Kevin Reid — SALES ENGINEER

Signature — Title

THERMALNETICS, INC.

Firm

3500 WEST ELEVEN MI RD BERKLEY, MI

Address

248-336-5546 — 12-1-06

Telephone — Date

Signature shall be by person having authority to legally bind his/her firm to the above terms. Failure to provide legally binding signature will result in retraction of approval.

12.7.06 PENDING REVIEW & OWNER APPROVAL.
.... PLS. CLARIFY BID.
-KS(BMC)

Sub #13

For use by Architect:	For Use by Owner:
____ Accepted ____ Accepted as Noted	____ Accepted ____ Accepted as Noted
____ Not Accepted ____ Received Too Late	____ Not Accepted ____ Received Too Late
____ Insufficient Data Received	____ Insufficient Data Received
By: _____	By: _____
Date: _____	Date: _____
Fill in Blanks Below: (Attach additional sheets as required)	

A. Does the Substitution affect dimensions shown on Drawings?
Yes ____ No X If yes, clearly indicate changes: _____

B. Will the undersigned pay for changes to the building design, including engineering and detailing costs caused by the requested substitution?
Yes ____ No X If no, fully explain: NO COST CHANGE INVOLVED

C. What affect does substitution have on other contracts or other trades?
NONE

D. What affect does substitution have on the delivery and construction schedule? NONE

E. Manufacturer's warranties of the proposed and specified items are: X Same ____ Different
If Different, explain on an Attachment

F. Reason for Request: NOT NAMED

G. Itemized comparison of specified item(s) with the proposed substitution; list significant variations:
SEE CATALOG

H. Accurate cost data comparing proposed substitution with product specified:
PROVIDED WITH BID

I. This substitution will amount to a credit or an extra cost to the Owner of:
PROVIDED WITH BID dollars
($_____)

END OF SECTION 01630

RECEIVED
DEC 06 2006
BY:
DEC 07 2006

BARTON MALOW COMPANY

DCR/RFI

RFI #44

Date 12/6/2006

DCR/RFI #

To: Kelly

Contractors reference #

Project: Three Middle Schools

VIA BARTON MALOW COMPANY

BMC Project #

A/E Project #

FROM Jeff Sordyl ARJAC INC.
FAX (313) 381-6234

Bid Package #

Bid Category #

Return To: ARJAC INC

Reference Specs: Reference Drawings

Request:

The Architect has selected standard black for the SCRS bathroom partitions for the three middle schools.
The manufacturer does not have black in these partitions
Please advise

Please advise

Jeff Sordyl — Contractor or subcontractor
Submitted By
12/6/2006 — Date

Barton Malow Company
Reviewed By
Date

Reply: WE WILL SELECT FROM MFR. STANDARD COLORS

Attachments:

This clarification is interpreted to be within the scope of the referenced contracts issued in accordance with the Contract Documents, and without change in Contract Sum or Contract Time, and, as such, is not an authorization for work beyond the scope of the contract.

Architect/Engineer
Reply By
12/6/06 — Date

SENT BACK TO ARJAC W/RFI# 44

BARTON MALOW COMPANY

DCR/RFI

RECEIVED DEC 06 2006

RFI#45

Date 12/6/2006

DCR/RFI #

To: Kelly

Contractors reference #

Project Three Middle Schools

VIA BARTON MALOW COMPANY

BMC Project #

A/E Project #

FROM Jeff Sordyl ARJAC INC.
FAX (313) 351-8234

Bid Package #

Bid Category #

Return To: ARJAC INC

Reference Specs: Reference Drawings

Request:

There are no measurments in the bathrooms we can use to estimate the cost of the bathroom partitions.

Please advise

Please advise

Jeff Sordyl 12/6/2006

Contractor or subcontractor Submitted By Date

Barton Malow Company Reviewed By Date

Reply: Attachments:

EXIST. CONDITIONS. YOU CAN CHECK THEM. AT THIS POINT THERE IS NO OPTION.

This clarification is interpreted to be within the scope of the referenced contracts issued in accordance with the Contract Documents, and without change in Contract Sum or Contract Time, and, as such, is not an authorization for work beyond the scope of the contract.

Architect/Engineer Reply By Date 11/6/06

1.5 PROJECT CONDITIONS

A. Field Measurements: Verify actual locations of walls, columns, ceilings, and other construction contiguous with toilet compartments by field measurements before fabrication and indicate measurements on Shop Drawings.

1. Established Dimensions: Where field measurements cannot be made without delaying the Work, establish dimensions and proceed with fabricating toilet compartments without field measurements. Coordinate wall, floor, ceilings, and other contiguous construction to ensure that actual dimensions correspond to established dimensions.

PART 2 - PRODUCTS

2.1 SOLID PHENOLIC-SOLID COLOR REINFORCED COMPOSITE (SCRC) UNITS

A. Available Manufacturers: Subject to compliance with requirements, manufacturers offering products that may be incorporated into the Work include, but are not limited to, the following:

1. Bobrick Washroom Equipment, Inc. – Sierra Series
2. Pre-approved equal.

B. Door, Panel and Pilaster Construction: SCRC panel material with eased and polished edges. Provide minimum 3/4-inch- thick doors and pilasters and minimum 1/2-inch- thick panels.

Color: Manufacturer's standard black. — NO such thing.

C. Pilaster Shoes: Stainless steel, ASTM A 666, Type 304, not less than 0.0312 inch specified thickness and 3 inches high, finished to match hardware.

D. Brackets (Fittings):

1. Full-Height (Continuous) Type: Manufacturer's standard design; aluminum.

2.2 ACCESSORIES

A. Hardware and Accessories: Manufacturer's standard design, heavy-duty operating hardware and accessories.

1. Material: Heavy gauge 304 satin-finish stainless steel.

B. Overhead Bracing: Manufacturer's standard continuous, extruded-aluminum head rail with antigrip profile and in manufacturer's standard finish.

C. Anchorages and Fasteners: Manufacturer's standard exposed fasteners of stainless steel or chrome-plated steel or brass, finished to match hardware, with theft-resistant-type heads. Provide sex-type bolts for through-bolt applications. For concealed anchors, use hot-dip galvanized or other rust-resistant, protective-coated steel.

1090 Sierra™ Series New Solid Color Reinforced Composite (SCRC) Toilet Partitions.

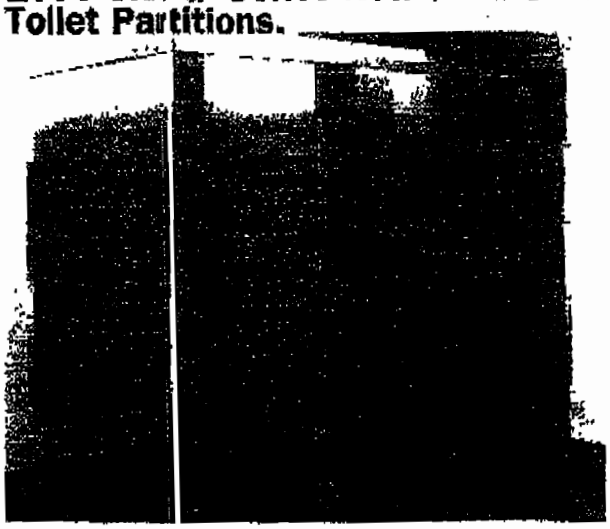

OVERHEAD-BRACED INSTALLATION
Configuration maximizes structural stability and vandal-resistance.

Solid Color Clear Through

Graffiti Cleans Without Ghosting

Resists Scratching, Gouging, Dents and Impacts

Heavy Duty Stainless Steel Hardware

Sierra™ Series Protects Against:

- Paint and marker ink; ultra-hard GraffitiOff™ surface facilitates easy cleaning.
- Dents, impacts, gouging, carving and chemicals.
- Hose-down maintenance and environmental moisture.
- Corrosion and structural failure.
- Flame spread and smoke development. Has ICC, NFPA Class B ASTM E 84 test result classification.
- Contributes to LEED Certification Program.

Specify for washrooms where maximum vandal resistance is a must: schools, recreation centers, theme parks, public stadiums, theaters, and criminal justice facilities. 4 Rapid Response colors; 10-day order fulfillment. 10-year limited warranty against breakage, corrosion and delamination. For product warranties and limitations information, see page 4. Patent pending.

Standard Features



MATERIAL
Doors, stiles: ¾" (19mm) thick; panels: ½" (13mm) thick. Solid Color Reinforced Composite (SCRC) is composed of dyed organic fibrous material reinforced with polycarbonate and phenolic resins between color Melamine surface sheets. Material is integrally-bonded to form a solid homogenous panel with thermal and mechanically-applied pressure. SCRC has solid color throughout.

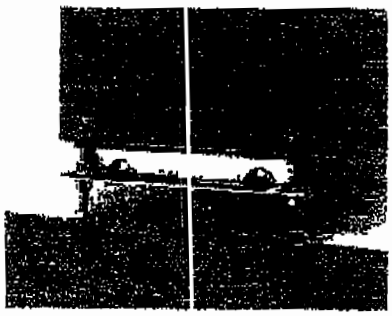

STILE BASE, LEVELING DEVICE
7-gauge, 5/16" (5mm) thick, corrosion-resistant steel angle leveling bar is factory installed to base of Solid Color Reinforced Composite (SCRC) stile. ⅜" (10mm) diameter, stainless steel wedge floor anchors require 2" (51mm) penetration into 3" (76mm) thick structural concrete floor.



1092 HEAVY-DUTY HARDWARE
Heavy gauge, type 304 satin-finish stainless steel. (1) Hinge adjusts for partial opening or self-closing door. Features (2) through-bolted panel-to-stile brackets, (3) reinforced latch with through-bolted keeper, (4) vandal-resistant door stops, and (5) through-bolted clothes hook. Patented, one-piece shoe conceals stile leveling device. For emergency access, door lifts from outside.



THROUGH-BOLTED HARDWARE
For added strength and resistance to vandalism, stainless steel through-bolted fasteners are used to attach panel-to-stile brackets, clothes hooks, and latch keepers to stiles. Vandal-resistant fasteners have Pin-in-Head Torx Screw heads exposed on the exterior and interior of the toilet compartment.



FACTORY-INSTALLED THREADED INSERTS
Threaded brass inserts are factory-installed for securing door hinges, door latch and door stops; speeds job-site installation. Each insert withstands over 1,500 pounds (6672 N) of pull out force. Vandal-resistant Pin-in-Head Torx Screws attach hinges, door stops, door latch keepers and mounting hardware.

Optional Features

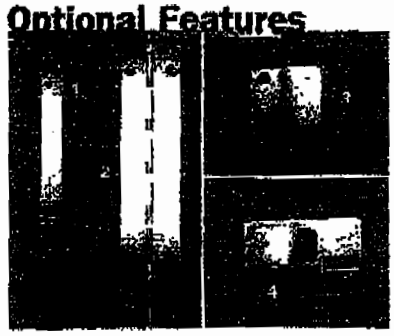

1092.C7 OPTION INSTITUTIONAL HARDWARE
Heavy-duty, type 304 satin-finish stainless steel. (1) Through-bolted panel-to-stile U-channel and (2) spring-loaded, self-closing hinge run full height of panels and doors, (3) vandal resistant door stops, and (4) reinforced latch with through-bolted keeper. Patented, one piece shoe conceals stile leveling device. Clothes hook not included.

OPTIONAL OCCUPANCY INDICATOR DOOR LATCH
Through-the-door stainless steel construction. Red/green occupancy indicator. Emergency access feature. Available on special order. See pages 27, 28 or 29 for photo.

The new generation of toilet partitions.



SUPERIOR NON-GHOSTING GRAFFITI REMOVAL

Metallic marking pens, markers containing xylene, and other permanent markers, acrylic and enamel paints are removed by quality D-limonene based graffiti removers. See Bobrick Advisory Bulletin TB-80 for ASTM D 6578-00 results.



SUPERIOR SCRATCH AND DENT RESISTANCE

Sierra™ Series Solid Color Reinforced Composite (SCRC) ultra-hard GraffitiOff™ Surface resists scratching, gouging, denting. See Bobrick Advisory Bulletins TB-79 and TB-78 for ASTM D 2197-98(2002) and D 2794-93(1999)e1 results.

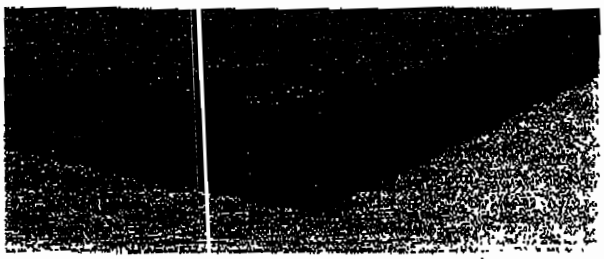

SOLID COLOR CLEAR THROUGH/REPAIRABILITY

Minimize light scratches by wiping with D-limonene-based graffiti remover, or a high-solid-content silicone sealant; repair moderate scratches by applying a matching color crayon; heavy gouges can be sanded and sealed. See Bobrick Advisory Bulletin TB-81 for details.

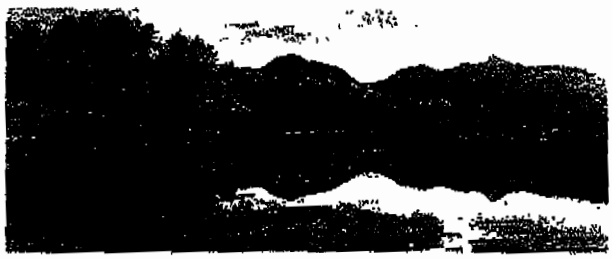

CONTRIBUTES TO LEED PROGRAM CERTIFICATION

Solid Color Reinforced Composite (SCRC) meets the demand for environmental sustainability in architectural design. In some states, stepped tax credits are offered to commercial buildings for different levels of LEED Certification. See Bobrick Advisory Bulletin TB-77 for details.

1090 SIERRA™ SERIES PRODUCT SELECTOR CHART

Configuration	Standard Series	Optional Feature Institutional Hardware
Overhead-Braced	1092	1092.67

1090 10-DAY RAPID RESPONSE™ ORDER FULFILLMENT AT NO EXTRA CHARGE

Bobrick will ship up to 25, Sierra™ Series Toilet Compartments within 10 workdays after receipt of approved drawings at no extra charge. Includes four standard colors and Overhead-Braced installation configuration only.

DESIGNER'S NOTE

Per ASTM E 84 Tests:

Series	Flame Spread Index	Smoke Developed Index	IBC/NFPA ASTM E 84 Classification
1090 Series ½" (13mm) Panels	45	120	Class B
¾" (19mm) Doors, Stiles	45	95	Class B

See Bobrick Advisory Bulletin TB-73.

PRICE INDEX		
	TrimLine P-Lam Stainless Steel-Edged	2.3
	DuraLine Phenolic/Moisture-Resistant	2.2
	Sierra Solid Color Reinforced Composite	2.1
	Designer P-Lam/Steel-Core Stiles	1.7
	Classic P-Lam/Exposed-Pivot	1.0

Earthtone Color Collection.

Now you can brighten your restrooms with Sierra™ Series contemporary earthtones, and with GraffitiOff™ Surface you no longer need black toilet partitions to minimize the partial or unsuccessful removal of graffiti.



SC01 Golden Khaki | SC02 Desert Biege | SC03 Terra Cotta | SC04 Forest Green

Notes: Minor edge nicks and random color variations are a normal consequence of manufacturing material containing natural fibers. Sierra™ Series Solid Color Reinforced Composite (SCRC) colors are printed reproductions and are for descriptive purposes only. Request actual color samples for color confirmation.

1090 SIERRA™ SERIES SOLID COLOR REINFORCED COMPOSITE (SCRC) TOILET PARTITIONS

DEC 07 2006

RFI#46 RECEIVED DEC 06 2006 By

BARTON MALOW COMPANY

DCR/RFI

Date 12/6/2006

To: Kelly

VIA BARTON MALOW COMPANY

FROM Jeff Sordyl ARJAC INC.
FAX (313) 381-8234

DCR/RFI #

Contractors reference #

Project Three Middle Schools

BMC Project #

A/E Project #

Bid Package #

Bid Category #

Return To: ARJAC INC

Reference Specs:

Reference Drawings

Request:

There are no specifications regarding diffuser panels for the band room or choir room in Larson or Boulan Park

Please advise

Please advise

Contractor or subcontractor

Jeff Sordyl
Submitted By

12/6/2006
Date

Barton Malow Company

Reviewed By

Date

Reply: 09511
SEE ATTACHED CLG. SPEC.

Attachments:

This clarification is interpreted to be within the scope of the referenced contracts issued in accordance with the Contract Documents, and without change in Contract Sum or Contract Time, and, as such, is not an authorization for work beyond the scope of the contract.

KINGSCOTT
Architect/Engineer

Reply By

12/7/06
Date

Three Middle Schools Remodeling Additions (Boulan Park, Larson Smith) BP #9361
Planholders List

Work Category	Addenda	PICKED UP OR SHIPPED	CONTACT	DELIVERY	Work to Bid
1.1		DKI	Phil Mansour	Customer Pick-Up	DEMOLITION
1.1		Homrich Wrecking	Pamela Gross	UPS (used cust's acct#)	DEMOLITION
2.1		ABC Paving	Barb Walters	Customer Pick-Up	SITEWORK
2.1		Cortis Bros.	John M.	Customer Pick-Up	SITEWORK
2.1/3.1		Simone Contracting Corp.	Chad Stellars	Customer Pick-Up	SITEWORK
2.1		Blaze Contracting	Gayle Turk	UPS (used cust's acct#)	SITEWORK
2.1		Peake Concrete	Walt Spring	Customer Pick-Up	SITEWORK
2.1		Nagle Paving	David Cowpes	Customer Pick-Up	SITEWORK
2.1		Pamar Enterprises	Shawn Stockwell	Customer Pick-Up	SITEWORK
2.1		Koala-T Construction	Nick Reeser	Customer Pick-Up	SITEWORK
2.1		Angelo Iafrate	Hal Howlett	Customer Pick-Up	SITEWORK
2.1		Service Construction	Mike Karas	Customer Pick-Up	SITEWORK
2.1		Matzak, Inc.	Joe Green	Customer Pick-Up	SITEWORK
3.1		Ferrini Contracting	Victor Ferrini	Customer Pick-Up	CONCRETE
3.1		Kerson Construction	Mike Kerckaret	Customer Pick-Up	CONCRETE
3.1		McCarthy Construction	Kevin Sibilla	Customer Pick-Up	CONCRETE
3.1		Simone Contracting Corp.	Chad Stellars	Customer Pick-Up	CONCRETE
3.1		Gemelli Concrete	Leo Gemelli	UPS (used cust's acct#)	CONCRETE
3.1		Authority Group Concrete	Roger Fox	Customer Pick-Up	CONCRETE
3.1		Calandra & Son's	Paul	Customer Pick-Up	CONCRETE
3.1		Dan's Cement	Estimator	UPS (used cust's acct#)	CONCRETE
3.1		Peter A. Basile & Son	Jesse Anaya	UPS (used cust's acct#)	CONCRETE
4.1		Baro Contracting	Todd Gross	Customer Pick-Up	MASONRY
4.1		Efficient Design	Dennis K.	Customer Pick-Up	MASONRY
4.1		Brend Contracting	Nicole Grund	Customer Pick-Up	MASONRY
4.1		Giannola Masonry	Roger Giza	Customer Pick-Up	MASONRY
4.1		Leidel & Hart	Mike Harman	Customer Pick-Up	MASONRY
4.1		Durkin & Company	Chad London	Customer Pick-Up	MASONRY
4.1		J & J Construction Co.	Jon Snyder	Customer Pick-Up	MASONRY
5.1		Intrepid Steel	Sandi Hutchinson	Customer Pick-Up	STRUCTURAL STEEL
5.1		Nelson Iron Works	Diane Grabowski	Customer Pick-Up	STRUCTURAL STEEL
5.1		Polyvision	Jeff Carty	UPS (used cust's acct#)	STRUCTURAL STEEL
5.1		Renaissance Sheetmetal	Sandy	Customer Pick-Up	STRUCTURAL STEEL
6.1		Arjac, Inc.	Jeff Sordyl	Customer Pick-Up	CARPENTRY & ACOUSTICAL CEILINGS
6.1		B & H Construction Co. Inc.	Jim Vandewalker	Customer Pick-Up	CARPENTRY & ACOUSTICAL CEILINGS
6.1		Willian E. Harnish Acoustical	Tom Kopcainski	Customer Pick-Up	CARPENTRY & ACOUSTICAL CEILINGS
6.1		ANM Construction	Homer Payton	Customer Pick-Up	CARPENTRY & ACOUSTICAL CEILINGS

REVISED: 12/7/2006

Three Middle Schools Remodeling Additions (Boulan Park, Larson Smith) BP #9361
Planholders List

Work Category	Addenda	PICKED UP OR SHIPPED	CONTACT	DELIVERY	Work to Bid
6.1		Brinker Team	Katie Corran	Customer Pick-Up	CARPENTRY & ACOUSTICAL CEILINGS
6.1		Pontiac Ceiling	Phil Ruffin	Customer Pick-Up	CARPENTRY & ACOUSTICAL CEILINGS
6.1		ASG	Rob	Customer Pick-Up	CARPENTRY & ACOUSTICAL CEILINGS
6.1		Hicks Construction	Howard Hicks	Customer Pick-Up	CARPENTRY & ACOUSTICAL CEILINGS
6.1		Westwood Carpentry	Tom Broughton	Customer Pick-Up	CARPENTRY & ACOUSTICAL CEILINGS
6.1		Doring, Inc.	Greg Grenier	Customer Pick-Up	CARPENTRY & ACOUSTICAL CEILINGS
6.1		Scheich	Dennis Scheich	Customer Pick-Up	CARPENTRY & ACOUSTICAL CEILINGS
6.1		Elkorn Construction	Jerry Nutt	Customer Pick-Up	CARPENTRY & ACOUSTICAL CEILINGS
6.1		J. Perez Construction	Eric Perez	UPS (used cust's acct#)	CARPENTRY & ACOUSTICAL CEILINGS
7.1		Royal Roofing	Doug	Customer Pick-Up	ROOFING
7.1		CEI Michigan	Rob Cook	Customer Pick-Up	ROOFING
7.1		Ann Arbor Roofing	Bob Miller	UPS (used cust's acct#)	ROOFING
7.1		Port Huron Roofing	Gray Hilton	UPS (used cust's acct#)	ROOFING
7.1		Stephenson Corporation	Lorrie Morris	UPS (used cust's acct#)	ROOFING
8.1		Capitol Aluminum & Glass	Norman	Customer Pick-Up	GLAZING & METAL WALL PANELS
8.1		Union Construction Services	Joe Hamption	Customer Pick-Up	GLAZING & METAL WALL PANELS
8.1		Harris Glass	Aaron Elliot	Customer Pick-Up	GLAZING & METAL WALL PANELS
8.1		Peterson Glass	Kevin Hickey	Customer Pick-Up	GLAZING & METAL WALL PANELS
8.1		Glasco	Steve	Customer Pick-Up	GLAZING & METAL WALL PANELS
8.1		Hewett Company	Mark/Scott	Customer Pick-Up	GLAZING & METAL WALL PANELS
8.1		Curtis Glass Co.	Rob Luscombe	Customer Pick-Up	GLAZING & METAL WALL PANELS
8.1		Rochester Hills Contract	William Sab	UPS (used cust's acct#)	GLAZING & METAL WALL PANELS
9.1		Hermes Painting Co.	Nick Stefanou	Customer Pick-Up	PAINTING
9.1		G.M. Painting	George/Fotis Meidanis	Customer Pick-Up	PAINTING
9.1		L & R Painting	Ray	Customer Pick-Up	PAINTING
9.1		Seven Brothers Painting	Tony	Customer Pick-Up	PAINTING

REVISED: 12/7/2006

Three Middle Schools Remodeling Additions (Boulan Park, Larson Smith) BP #9361
Planholders List

Work Category	Addenda	PICKED UP OR SHIPPED	CONTACT	DELIVERY	Work to Bid
9.1		Forest Painting	John Balatgi	Customer Pick-Up	PAINTING
9.1		Mike's Painting	Mike Livadic	Customer Pick-Up	PAINTING
9.1		NCS	Tom Niles	Customer Pick-Up	PAINTING
9.1		LV Painting	Nick	Customer Pick-Up	PAINTING
9.2		Boston Tile	Roland	Customer Pick-Up	TERRAZZO AND CERAMIC TILE
9.2		Atlantic Stoneworks	Hamza	Customer Pick-Up	TERRAZZO AND CERAMIC TILE
9.2		Michielutti Brothers	John Michielutti	Customer Pick-Up	TERRAZZO AND CERAMIC TILE
9.2		Artisan Tile	Bill Bellaver	Customer Pick-Up	TERRAZZO AND CERAMIC TILE
9.2		Empire Tile Company	Don Obrey	Customer Pick-Up	TERRAZZO AND CERAMIC TILE
9.3		Conventional Carpet	George	Customer Pick-Up	CPT, RESILIENT TILE AND BASE
9.3		Ropposch Brothers Floor Covering	Teresa Bodies	UPS (used cust's acct#)	CPT, RESILIENT TILE AND BASE
9.3		Shock Brothers Floor Covering	Chuck	Customer Pick-Up	CPT, RESILIENT TILE AND BASE
12.1/12.2		Holye Athletic	Randy Holye	UPS (used cust's acct#)	Telescoping Stands/Gym Equipment
12.1/12.2		C & M Associates	Ron Behl	UPS (used cust's acct#)	Telescoping Stands/Gym Equipment
12.1/12.2		C & R Equipment	Paul Wielenga	UPS (used cust's acct#)	Telescoping Stands/Gym Equipment
12.1/12.2		Dew-El Corporation	Keely Vanderhill	UPS (used cust's acct#)	Telescoping Stands/Gym Equipment
15.1		Long Mechanical	Jason O'Hara	Customer Pick-Up	MECHANICAL
15.1		Applegate Construction	Dave McCormich	UPS (used cust's acct#)	MECHANICAL
15.1		Macomb Mechanical	Gary Johnson Jr.	Customer Pick-Up	MECHANICAL
15.1		Heights Heating	Bob Gallant	Customer Pick-Up	MECHANICAL
15.1		Ventilation Systems	Dean Van Conany	Customer Pick-Up	MECHANICAL
15.1		McShane Mechanical	Wes Gregory	Customer Pick-Up	MECHANICAL
15.1		Ecker Mechanical	Jeff Howard	Customer Pick-Up	MECHANICAL
15.1		Dee Cramer	Richard Cramer	UPS (used cust's acct#)	MECHANICAL
15.1		Dependent (Industrial Mechanical	Tony	Customer Pick-Up	MECHANICAL
15.1		Great Lakes Mechanical	Danny Coss	Customer Pick-Up	MECHANICAL
15.1		Johnson & Wood	Steve Hall	Customer Pick-Up	MECHANICAL
15.1		Thermalnectis	Carmen DeAngelis	Customer Pick-Up	MECHANICAL
15.1		Interstate Fire Protection	Bob Peters	Customer Pick-Up	MECHANICAL
15.1		Blazer Mechanical	Butch Gerwin	Customer Pick-Up	MECHANICAL
15.1		Miller Sage Mechanical	Chad Miller	Customer Pick-Up	MECHANICAL

REVISED: 12/7/2006

Three Middle Schools Remodeling Additions (Boulan Park, Larson Smith) BP #9361
Planholders List

Work Category	Addenda	PICKED UP OR SHIPPED	CONTACT	DELIVERY	Work to Bid
15.1		Mechanical Heat & Frost	Jeff Dugan	Customer Pick-Up	MECHANICAL
15.1		Great Lakes West	Angie Newell	UPS (used cust's acct#)	
15.2		MCMI	Mike Daly	Customer Pick-Up	TEMPERATURE AND LIGHTING CONTROLS
15.3					MECHANICAL TESTING & BALANCING
16.1		Moote Electric	Steve Sharrard	Customer Pick-Up	ELECTRICAL
16.1		Andrew Electric	Andrew AN	Customer Pick-Up	ELECTRICAL
16.1		Metro Electric	Joe Brewer	Customer Pick-Up	ELECTRICAL
16.1		J & J Electric	Jerry Ellison	Customer Pick-Up	ELECTRICAL
16.1		Great Lakes Power & Lighting	Rob Schwab	Customer Pick-Up	ELECTRICAL
16.1		Mahalo Corporation	Anne Kelbery	Customer Pick-Up	ELECTRICAL
16.1		Hatzel & Buehler	Chris Kolito	Customer Pick-Up	ELECTRICAL
PLAN ROOM		Builders Exchange of Grand Rapids	Cathy Pisciotta	UPS (used cust's acct#)	PLAN ROOM
PLAN ROOM		Construction Association of Michigan	Production	UPS (used cust's acct#)	PLAN ROOM
PLAN ROOM		F. W. Dodge	Production	UPS (used cust's acct#)	PLAN ROOM
PLAN ROOM		Reed Construction Data	Production	UPS (used cust's acct#)	PLAN ROOM

REVISED: 12/7/2006

TROY SCHOOL DISTRICT
BID 9361
Middle School Additions and Renovations

	2.1 Site Const.	3.1 Concrete	4.1 Masonry	5.1 Structural Steel	6.1 Carpentry & Acoustical Ceilings	7.1 Roofing
Cortis Brothers Trucking & Excavating	279,900.00					
Peake Contracting Inc.	300,000.00					
Matzak Inc.	321,000.00					
ABC Paving Co.	334,700.00					
Peter A. Basile Sons, Inc.	354,462.00					
T & M Asphalt Paving, Inc.	343,500.00					
Simone Contracting Corp.	345,000.00					
C & H Development Inc.	408,000.00					
Service Construction	410,000.00					
Angelo Lafrate Construction co.	448,000.00					
Kerson Construction Inc.		48,975.00				
Dan's Cement Inc.		56,138.00				
McCarthy Construction Co.		54,600.00				
Efficient Design, Inc.			97,058.00			
Baro Contracting Co.			104,900.00			
Durkin & Co. contractors, inc.			109,899.00			
J & J construction Co.			122,400.00			
Dixon Incorp.			133,026.00			
HMC Mason Contractors			151,260.00			
B & A Steel Co., Inc.				37,389.00		
Nelson Iron Works Inc.				45,486.00		
Dobson Industrial Inc.				59,000.00		
Intrepid Steel				106,950.00		
Doring, Incorp.					733,400.00	
Pontiac Ceiling & Partition Co.					791,500.00	
Arjac Inc.					822,421.00	
Scheich Commercial Contracting Corp.					913,000.00	
Port Huron Roofing						59,900.00
CEI Michigan LLC						78,650.00

TROY SCHOOL DISTRICT
BID 9361
Middle School Additions and Renovations

	8.1 Glass & Wall Panels	9.1 Painting	9.2 Ceramic Tile	9.3 Carpet, Resil. Tile	12.1 Telescoping Stands	12.2 Gym Equipment	15.1 Mechanical
Stephenson Corp.	169,986.00						
Harris Glass, Inc.	226,100.00						
Union Const. Services, Inc.	227,000.00						
Glasco Corp	260,300.00						
I X L Glass Co.	260,900.00						
Curtis Class Co.	285,700.00						
Peterson Glass Co.	343,856.00						
L & R. Painting, Inc.		26,900.00					
Horizon Brothers Painting		28,359.00					
Niles Construction Services		28,456.00					
Seven Brothers Painting		31,500.00					
Mike's Painting		39,989.00					
LV Painting		42,800.00					
G.M. Painting Inc.		54,900.00					
Artisan Tile Inc.			28,900.00				
Conventional Carpet Inc.				46,500.00			
Shock Brothers Floorcovering Inc.				50,300.00			
Interkal LLC					30,351.00		
Architectural Systems Group					32,160.00		
Irwin Telescopic Seating Co.					35,649.00		
Hoyle Athletic Supply Inc.						7,222.00	
American Furniture Contractors, Inc.						7,547.00	
C & M Assoc. Inc.						12,269.00	
SimplexGrinnell							151,961.00
Macomb Mechanical Inc.							2,369,000.00
Long Mechanical							2,374,000.00
Johnson & Wood, LLC							2,995,000.00

TROY SCHOOL DISTRICT
BID 9361
Middle School Additions and Renovations

	15.2 Tem. & Lighting Controls	16.1 Electrical
Mechanical Controls & Main. Inc.	928,930.00	
J & J Electric, Inc.		720,018.00
Great Lakes Power & Lighting Inc.		938,000.00
Metro Electric Heating and Insulation		1,314,000.00