LODI USD DESIGN SPECIFICATION GUIDELINES

Edit Date: 12-14-2017

SECTION	ITEM	MANUFACTURER	MODEL	NOTES
DIVISION 3				
Concrete Floor Leveling, Patching & Grouting	Resurface Coating - Horizontal	US Mix Products Co.	Thinpatch	
	Patching / Resurface Coating - Vertical	US SPEC	VTU Resurfacer	
	Leveling Compound	L & M Constr. Chemicals, Inc.	Levelex / Levelex Primer	
	Patching / Resurface Coating - Vertical	US SPEC	Permasil	
	Non-shrink Grout	US SPEC	Premium Grout	
Concrete Maintenance	Concrete Cleaner	ProSoCo	Consolideck	
	Concrete Cleaner	ProSoCo	Sure Klean	
Concrete Reinforcing	Vapor Barrier Stakes	Vaporstake	Vapor Stake	
Concrete Forming	Expansion Joint Filler	Celotex Corporation	1/2" Thick Flexcell	
	Extruded Polystyrene Foam	Dow Chemical Corp	Styrofoam	
Cast In Place Concrete	Workability and Water Reducing Admixture	BASF	POZZOLIGHT 322N	
	Vapor Barrier - Loose Laid	Reef Industries	Sheet Membrane: VAPORguard	
	Anchoring Cement	US Mix Products Co.	Anchoring Cement	
	Structural Bonding Adhesive	US Mix Products Co.	Maxi-Bond 2500	
	Bonding Materials	US Mix Products Co.	Acrylcoat	
	Bonding Materials	US Mix Products Co.	Bond Coat	
	Bond Breaking Compound	L & M Constr. Chemicals, Inc.	Debond Form Coating	
	Curing Compound	W.R. Meadows	1100 Clear	
DIVISION 4				
Masonry, Stone and Tile Maintenance	Custom Masonry Acidic Cleaner	ProSoCo	Sure Klean, Custom Masonry Cleaner	
	Burnished Custom Masonry Acidic Cleaner	ProSoCo	Sure Klean, Burnished Custom Masonry Cleaner	
	General Purpose Non-Acidic Cleaner	ProSoCo	Enviro Klean Safety Klean	
	Heavy Duty Concrete Cleaner	ProSoCo	Sure Klean	
	Asphalt and Tar Remover	ProSoCo	Sure Klean Asphalt & Tar Remover	
	Oil and Grease Stain Remover	ProSoCo	Stand Off	
Unit Masonry	Concrete Masonry Units	Basalite	Precision	
DIVISION 5				
Structural Steel Framing	Direct Tension Indicator Washers	J & M Turner	ASTM F959, Type 325	
	Tension Control Fastener System	Lohr		
	Powder Driven Fasteners	Hilti Fastening Systems		
	Expansion Bolts	Hilti Fastening Systems	Kwik-Bolt Concrete Expansion Anchors	
	Shop Primer	Tnemec Company, Inc.	FD88	
	Shop Primer	Tnemec Company, Inc.	90-97 Tneme-Zinc	
	Hole filler for steel columns and beams	JB Industries	Industro Weld	
Steel Decking	Metal Roof Deck (Non Acoustical)	Verco	PLB-36, PLN3	
	Metal Roof Deck (Cellular)	Verco	PLB-CD, PLN-CD	
	Metal Roof Deck (Acoustical)	EPIC	ER2RA	

LODI USD DESIGN SPECIFICATION GUIDELINES

Edit Date: 12-14-2017

SECTION	ITEM	MANUFACTURER	MODEL	NOTES
Metal Ladders	Access Ladder Components: Rungs	McNichols	Traction Tread	Exterior condition hot dipped galvanized, schedule 40
Metal Fabrications	Escutcheons	Plumbing Supply Co.	Heavy Gauge Escutcheons with Springs	
	Boots - Pipe Penetrations	Pipetite	Pipetite Standard	
Metal Railings	Exterior guardrails and handrails			Hot dipped galvanized, schedule 40
DIVISION 6				
Rough Carpentry	Accessories	Simpson Strong Tie		
	Plywood Sheathing Backing Boards	Panel Source International	Purekor Retardant Plywood, 5-ply, Western Hemlock/Fir	
Laminated Veneer Lumber	Laminated Veneer Lumber (LVL)	Weyerhaeuser, iLevel	Microllam, Western Species	
Parallel Strand Lumber	Paralell Strand Lumber (PSL)	Weyerhaeuser, iLevel	Parallam, Western Species	
Wood I-Joists	Flanges	Weyerhaeuser, iLevel	Micro-Lam	
Glue-Laminated Construction	Glue Laminated Beams	Willamette Industries, Inc. / Weyerhaeuser		
Fiberglass Reinforced Panels (FRP)	Standard FRP Panels	Nudo	Standard, Class I/A: Peblled Texture	Marlite
	Standard FRP Panels: Trim	Nudo	Extruded PVC Trim	Marlite
	Standard FRP Panels: Sealant	Nudo	Clear Silicone	
	Standard FRP Panels: Adhesives	Nudo	Water Resistant, Non-Flammable	
	Outside Corner Guards	Korogard	Stainless Steel Corner Guard, 2"x2", #4 Satin Finish	
Plastic Laminate	Veneer	Formica		Wilsonart
Architectural Casework	Substrates for Laminate Veneer	Roseburg Forest Products	Sky Blend	
	Adjustable Shelving Substrates for Laminate Veneer	Roseburg Forest Products	HyBrid	
	Casework Hardware: Hinges	Blum	Clip Top Series	
	Casework Hardware: Door & Drawer Pulls	Hafele	Stainless Steel "U" Shaped Wire Pull	
	Casework Hardware: Drawer Slides	Knape & Vogt	Full Extension and 1.5" Extension, Ball Bearing Captured Slides	
	Casework Hardware: Drawer & Cabinet Door Locks	Sugatsune	Million Locks, 6830-30MK, Mortised	
	Casework Hardware: Adjsutable Casework/Cabinet Shelving (Recessed)	Knape & Vogt	Recessed, No. 255	
	Casework Hardware: Adjsutable Casework/Cabinet Shelving (Support Clips)	Knape & Vogt	Horizontal Slot, No. 256R	

LODI USD DESIGN SPECIFICATION GUIDELINES

Edit Date: 12-14-2017

SECTION	ITEM	MANUFACTURER	MODEL	NOTES
DIVISION 7				
Cold Applied Self-Adhering Membranes	Underlayment: Roofs	W.R. Grace	Vycor Ultra	
	Flexible Flashing: Roofs	W.R. Grace	Vycor Ultra	
	Flexible Flashing: Walls	W.R. Grace	Vycor Plus	
	Flexible Flashing: Door and Window Openings	W.R. Grace	Vycor Plus	
	Flexible Flashing: Copings	W.R. Grace	Vycor Ultra	
Concrete Slab Vapor Emission Control Treatment	Remedial Treatment	Synthetics, Intl.	Synthetic 30 - Factory Mixed	
Water Repellant / Anti-Graffiti Coatings	Water Repellant / Anti-Graffiti Coating	This Stuff Works (TSW), Inc.		
Building Insulation	Thermal and Acoustical Insulation	Owens/Corning	Unfaced - Sound Attenuation Fire Batt Insulation	CertainTeed, Johns Manville
	Thermal and Acoustical Insulation	Owens/Corning	Unfaced - Thermal Batt Insulation	CertainTeed, Johns Manville
	Rigid Insulation - Roofs	RMAX	Multi Max FA-3	
Metal Roof Panels	Roof Panel	AEP	Design Span	Metal Sales, Centria, MBCI, Garland
	Standing Seam Mounting Clips	S-5	S-5 Series	
Spray Applied Air Barrier Membrane	Spray Applied Air Barrier	Henry Company	Air Bloc 33 MR	
Wall Cladding Rain Screen Assembly	Rain Screen Panels	Trespa	Solid Phenolic, Meteon	
Metal Siding Assembly	Wall Panel Assembly	AEP	Flex Series	Metal Sales, Centria, MBCI, Garland
Thermoplastic Membrane Roofing	Roofing Membrane	GAF, Sarnafill, Firestone	Everguard	60 mils minimum
	Roof Walkway Pads	GAF, Sarnafill, Firestone	Walkway Pad	
	Membrane Coated Sheet Metal Flashing	GAF, Sarnafill, Firestone	Membrane Coated Sheet Metal	
	Slip Sheet - Separation Roll Goods	Atlas Roofing Corporation	FR-50	
Firestopping	Through-Penetration Firestop Systems	3M	CP 25WB+	Hilti
	Through-Penetration Firestop Systems	3M	FS - 195+, PPDs	Hilti
Sheet Metal Flashing & Trim	Pre-manufactured Copings, Flashings, Etc.	Fry Reglet		
Isolation Membrane	Slip Sheet	Atlas	FR-50	
Roof Hatches & Safety Railings	Roof Hatch at Fixed Wall Mounted Ladders	Bilco	S-50	
	Roof Hatch Safety Railing	Kee Industrial Products, Inc.	KeeHatch	
Sealants and Caulking	Exterior	Dow Corning	795, Type 4	
		Sika	2c	
		Tremco	Vulken	
		Pecora Corporation	Dynatred	
	Interior	Dow Corning	999A Type 11	
		Pecora Corporation	Dynapoxy	
	Mastic / Sealant (Door Thresholds)	Tremco	Vulkem 116	Sika, Pecora
	Tape	3M	Closed Cell Acrylic Foam	
Expansion Control	Exterior Wall Expansion Joint	Balco	9WC	MM systems
	Roof to Wall Expansion Cover	Balco	FRE	MM systems

LODI USD DESIGN SPECIFICATION GUIDELINES

Edit Date: 12-14-2017

SECTION	ITEM	MANUFACTURER	MODEL	NOTES
DIVISION 8				
Steel Doors and Frames	Doors, Door Frames, and Window Frames	Ceco Doors		Curries, Total Door, Door Components, Timely
	Door Louvers	Anemostat		
	Door Lite Assembly Frame and Glazing Compound	Anemostat	LoPro	
	Sound Attenuation Fill - Door Frames	Owens Corning	Mineral Wool (Rated Conditions)	
	Sound Attenuation Fill, Spray In Foam	Fomospray	Spray Insulation (Non-rated)	
	Sound Attenuation Fill, Sealant	Macklanburg-Duncan	Insulating Foam Sealant	
	Fire Rated Glazing Tape	Anemostat	GT - Fire Rated Glazing Tape	
Steel Frames	Fixed Frames	Timely	Standard Profile, Series C	Curries, Total Door, Door Components, Ceco
	Pocket Door Frames	Timely	Pocket Door Trim - Series P	
	Casing Trim	Timely	TA-28 Casing	
Access Doors and Panels	Access Door and Panels - Walls	Acudor	UF-5000 (Non-rated) FW-5050 (Rated)	
	Cement Plaster - Flush	Acudor	PS-5030 (Non-rated) FW-5050 With Flange (Rated)	
	Ceilings and Soffits	Acudor	UF-5000 (Non-rated) SD-6000 (Security)	
	Valve Boxes	Acudor	ARVE	
	Non-rated Ceiling Access Hatch/Door	KARP Associates, Inc.	KSTE (acoustical tile ceiling) KSTDW (drywall finish ceiling)	
Wood Doors	Flush Panel - Solid Core Wood Door	Oregon Door	Standard Profile, PC-5	
	Vision Glass Lite and Frame In Doors	Anemostat	LoPro	
	Fire Rated Glazing Tape	Anemostat	Fire Rated Glazing Tape	
Door Hardware	Refer to District's Hardware Specification Guidelines			Refer to District's Hardware Specification Guidelines
Overhead Insulated Coiling Doors	Smokeshield Insulated Rolling Fire Door	Cornell Iron Works, Inc.	ERD21	Cookson Co., Alpine Overhead Doors
Glazing	Steel Framed Windows: Non Rated	PPG Glass	Clear Single Glazing	
	Fire Rated Glazing - Door and/or Window Locations	Techincal Glass Products	FireLite - NT	Non-wired glazing
	Storefront Windows and Doors	PPG Glass	SolarBan 70XL	1" min. Insulated units
	Framed Door Vision Lite	PPG Glass	Clear Laminated Glazing	
	Glazing Fire Tape	Pemko	FG300S90	
Overhead Doors	Vertical Rise Door Assembly	SGCA Doors	Rise	Cookson Co., Overhead Door
Entrances, Window Walls, Storefronts and Curtain Walls	Storefront System	Oldcastle Glass (Vistawall Products)	Series 3000 Thermal Multiplane	Arcadia, Kawneer
	Operable Windows: Horizontal Slider	Building Envelope	Signature Series, 4" Horizontal Slider	
	Aluminum Storefront Doors	Oldcastle Building Envelope	#500 Wide Style Doors	Arcadia, Kawneer
	Aluminum Flush Panel Doors	Special - Lite, Inc.	SL-16	
Translucent Wall and Roof Assemblies	Translucent Wall and Roof Assemblies	Kalwall Corporation		
Skylights	Fixed Skylights	Velux	Model No. Skylight FCM	Sunoptics, CPI Daylighting

LODI USD DESIGN SPECIFICATION GUIDELINES

Edit Date: 12-14-2017

SECTION	ITEM	MANUFACTURER	MODEL	NOTES
DIVISION 9				
Metal Framing (Non-structural)	Stud	Dietrich Metal Framing		
	Header Assembly	Brandy	Pro X Header	
	Galvanized Repair Paint	ZRC Worldwide	ZRC Zero VOC Water Based Galvanizing Compound	
Gypsum Board and Sheathing Substrates	Interior Walls	Georgia Pacific	ToughRock Fireguard Type X	USG, National Gypsum
	Interior Face of Exterior Walls	Georgia Pacific	Dens Armour Plus Fireguard Type X, High Performance Interior Panel	USG, National Gypsum
	Damp Locations (Non-tile Veneer Conditions)	Georgia Pacific	Dens Armour Plus Fireguard Type X, High Performance Interior Panel	USG, National Gypsum
	Thin Veneer Wall and Ceiling Sheathing (Non-shower Locations)	Georgia Pacific	Dens Shield Fireguard Type X Tile Backer	USG, National Gypsum
	Roof Underlayment	Georgia Pacific	Dens Deck Prime Type X Exterior Sheathing	
	Accessories	USG	DUR-A-BEAD Corner Bead	
	Accessories	USG	Sheetrock Brand (Tape On Trim)	
	Accessories	USG	Sheetrock Brand	
	Accessories	USG	Sheetrock Brand (No. 200)	
	Accessories	USG	Sheetrock Brand (No. 093)	
	Joint Treatment	USG	Sheetrock - Plus Three Compound Joint Tape - Heavy	
	Joint Treatment	Georgia Pacific	Dens Armour Plus ToughRock Fiberglass Mesh Tape	
	Joint Treatment Compound	USG	Setting Compound (as recommended) - Level 5 Finish	
	Joint Treatment	Georgia Pacific	Dens Shield Tile Backer Board ToughRock Fiberglass Mesh Tape	
	Joint Treatment Compound	USG	Setting Compound	
	Joint Treatment Substrate and Tape Product - Exterior Walls	Georgia Pacific	Dens Glass/Dens Deck Prime Tough Rock Fiberglass Mesh Tape	
	Joint Treatment Compound - Exterior Walls	Pecora Corporation	AC-20 Acrylix Latex Sealant	
	Textured Walls - Sealer/Primer	USG	First Coat, Sheetrock Brand	
	Textured Walls - Texture	USG	Red Bag Wall Texture	
	Smooth Wall/Level 5 - Skim Coat	USG	Plus Three	
	Smooth Wall/Level 5 - Sealer/Primer Coat	USG	First Coat, Sheetrock Brand	
Portland Cement Plaster Assembly	Metal Lath	Structa Wire Corporation	17 Ga. X 1-1/2" SF CR TT (Twin Track)	
	Corner Bead	Amico	X-2 (Outside corner)	
	Soffit Drop	Stockton Products	#5 Drip, NFD	
	Control Joints	Amico	Griplock "J"	
	Casing Bead	Amico	X-66	
	Expansion Joints	Amico	2-Piece Expansion Joint (#40 Type)	
	Window/Door Head Drip	Stockton Products	WTP - 1" (x Dim) - 4" Flange (y Dim)	
	Base of Wall Drip	Stockton Products	J-Bead w/ 1/4" Dia. Weep Holes	

LODI USD DESIGN SPECIFICATION GUIDELINES

Edit Date: 12-14-2017

SECTION	ITEM	MANUFACTURER	MODEL	NOTES
	Cement Plaster Mix - Lime Substitute	Gibco	RPF	
	Admixtures - Enhancing Emulsion	BASF	ACRYL 60	
	Wall Penetration Boot/Collar Flashing	Quickflash Weatherproofing Products, Inc.	P Series (Pipe and conduit penetration) E Series (Electrical boxes)	
Tile	Waterproof Membrane & Crack Protection Assembly	Laticrete	9235 Liquid, 9235 Fabric	
	Mortar: Thin Set	Laticrete	254 Platinum	
	Grout: Cementitious	Laticrete	PermaColor Select	
	Sealer: Wall Grout Sealer	Miracle Sealants & Abrasives Co.	511 Impregnator	
	Cleaner: Surface	Miracle Sealants & Abrasives Co.	Mira Clean #1	
	Trim	Schluter	Jolly	
Acoustical Ceiling Tile and Suspension System	Acoustical Tiles	Armstrong	Dune - 1775HRC	
	Acoustical Tiles	Armstrong	Kitchen Zone - 673	
	Suspension Grid Systems - Main TEE	Armstrong	7501HRC	
	Suspension Grid Systems - Cross TEE	Armstrong	XL7520HRC XL7540HRC XL7580HRC	
	Suspension Grid System Wall Angle	Armstrong	7880HRC	
	Suspension Grid System Seismic Joint Clips	Armstrong	Berc2 SJMBR09	
	Suspension Grid Systems - Main TEE	Armstrong	7301HRC	
	Suspension Grid Systems - Cross TEE	Armstrong	XL8320HRC XL8340HRC XL8380HRC	
	Lag Screws "I"	I-Lag	750 SD 150 SD	
Resilient Base and Accessories	Resilient Base	Burke Flooring	Burke Base Rubber Wall Base, Type TS	
	Flooring Transition	Burke Flooring		
	Adhesives and Fillers	Burke Flooring		
	Sealant	Burke Flooring	Colored	
	Vinyl Track Extenders	Burke Flooring	975	
Resilient Athletic Flooring	Resilient Flooring	Tarkette Sports	Omnisports	
Epoxy Floor Coating	Epoxy Based Seamless Flooring System	Dur-A-Flex, Inc.	Dur-A-Quartz	
Polyurethane Flooring System	Cementitious Urethane Concrete Coating	Dur-A-Flex, Inc.	Poly-Crete MDB	
Carpet Tile	Carpet Tile	Tandus	Centiva	
		Patcraft	Don't Run	
Resilient Sheet Flooring	Resilient Sheet Flooring	Forbo Marmoleum	Real	
Resilient Tile Flooring	Luxury Vinyl Tile	Shaw Contract	Grain 0364V	
Vinyl Wall Covering	Vinyl Wall Covering	DesignTex	Vincent	Koroseal
		DesignTex	Custom Mural	Koroseal
Tackable Wall Covering	Tackable Composite Wall Covering	Forbo	Bulletin Board	

LODI USD DESIGN SPECIFICATION GUIDELINES

Edit Date: 12-14-2017

SECTION	ITEM	MANUFACTURER	MODEL	NOTES
Acoustic Wall Panels	Acoustic Wall Panels	Kirei	EchoPanel	
Painting and Coatings	Polyurethane System Primer - Aluminum	Sherwin Williams	Procryl Acrylic Universal Primer B66W00-310	Benjamin Moore, PPG
	Polyurethane System Finish	Sherwin Williams	High Solids Polyurethane B65 - 100 Series, B65-625	Benjamin Moore, PPG
	Polyurethane System Hardener	Sherwin Williams	B65-V625	Benjamin Moore, PPG
	Polyurethane System Primer - Galvanized Steel/Ferrous	Sherwin Williams	Procryl Univesral Primer B66W00-310	Benjamin Moore, PPG
	Polyurthean System Primer - Ferrous	Sherwin Williams	Water Based Macropoxy 646 Primer	Benjamin Moore, PPG
	Exterior Wood Stain	Sherwin Williams	Woodscapes Poly S/T A15T15	Benjamin Moore, PPG
	Exterior Wood Solid Color Paint - Latex Satin Finish - Primer	Sherwin Williams	Exterior Latexwood Primer B42W8041	Benjamin Moore, PPG
	Exterior Wood Solid Color Paint - Latex Satin Finish - Finish	Sherwin Williams	A-100 Latex Satin A82 Series	Benjamin Moore, PPG
	Polyurthen System Primer - Galvanized Steel/Ferrous	Sherwin Williams	Pro Industrial Pro-Cryl Universal Primer B66W00-310	Benjamin Moore, PPG
	Polyurthen System Finish - Galvanized Steel/Ferrous	Sherwin Williams	High Solids Polyurethane 100 Series B65W00625	Benjamin Moore, PPG
	Polyurthen System Hardener - Galvanized Steel/Ferrous	Sherwin Williams	Primer: B58v620 Finish: B65v625	Benjamin Moore, PPG
	Polyurethan System Primer - Ferrous	Sherwin Williams	Macropoxy 646 - 100 Fast Cure Epoxy Primer B58W00620	Benjamin Moore, PPG
	Interior Wood - Painted Flame Retardant	Flame Control Coatings, LLC	10-10A	
	Interior Wood Paint - Primer	Sherwin Williams	Premium Wall and Wood Primer B28W8111	Benjamin Moore, PPG
	Interior Wood Paint - Semi-Gloss	Sherwin Williams	Promar 200 S/G Zero B31-2600	Benjamin Moore, PPG
	Interior Wood Paint - Egg-Shell	Sherwin Williams	Promar 200 Egg Shell Zero B20-2600	Benjamin Moore, PPG
	Interior Wood Clear Finish	Sherwin Williams	Wood Classic Ploy A67F1	Benjamin Moore, PPG
	Interior Wood Stained Urethane System	Sherwin Williams	Miniwax 250 Stain	Benjamin Moore, PPG
	Interior Wood Stained Urethane System	Sherwin Williams	Wood Classic Poly A67F1	Benjamin Moore, PPG
	Interior Drywall Primer	Sherwin Williams	Promar 200 Interior Latex Primer B28W08200	Benjamin Moore, PPG
	Interior Drywall Paint - Egg-Shell/Flat	Sherwin Williams	Promar 200 Zero VOC B30W02651	Benjamin Moore, PPG
	Interior Drywall Paint - Gloss	Sherwin Williams	Promar 200 Gloss B21W00251	Benjamin Moore, PPG
	Interior Pipe Identification	Sherwin Williams	Hydro Gloss H20 Based Urethane B65W181	Benjamin Moore, PPG
	Interior Galvanized Repair Paint	ZRC Worldwide	ZRC Zero VOC Water Based Galvanizing Compound	
	Anti-Slip Paint/Coating	Wooster Products	Epoxy WP-70	
Elastomeric Coatings	Elastomeric Finish	Dryvit	Weatherlastic Adobe - DS 418	
	Metal Accessory Paint	Dryvit	Demandit	
	Roof Coatings	Western Colloid, Apoc		
	Building Coatings	Sherwin Williams	Sherlastic, Conflex	
	Wall Penetration Boot/Collar Flashing	Quickflash Weatherproofing Products, Inc.	P Series (Pipe and conduit penetration) E Series (Electrical boxes)	

LODI USD DESIGN SPECIFICATION GUIDELINES

Edit Date: 12-14-2017

SECTION	ITEM	MANUFACTURER	MODEL	NOTES
DIVISION 10				
Visual Display Boards	Markerboard	Claridge	Writing Surface LCS[3]	
Signage	Signage	Advance Corporation, Braille Tac Division		
	Fire Extinguisher Signage	Seton	Model 39429	
Dimensional Letter Signage	Dimensional Letters	Western Sign Company, Inc.		
Toilet Accessories	Washroom/Shower Accessories	Bobrick		
	Grab Bars	Bobrick		
	Mirror	Bobrick	B-165	
	Electric Hand Dryer	Workd Dryer	SLIMdri. Aluminum, brushed chrome	
Solid Plastic Toilet and Shower Compartments	Solid Plastic Toilet and Shower Compartments	ASI Global Partitions	Solid Plastic (HDPE)	
Metal Lockers	Metal Lockers	Penco	Guardian Defiant	Lyon, Republic Storage
Emergency Access Cabinets	Rapid Entry Access Vaults Key Switches	Knox Company Knox Company	Knox-Vault 3275 Model 3502	
Fire Extinguisher and Fire Extuingisher Cabinets	Fire Extinguisher (Cabinet)	Potter - Roemer	3006 x 5" Diameter x 16" Tall	
	Fire Extinguisher (Wall Bracket)	Potter - Roemer	3410 x 7" Diameter x 24" Tall	
	Fire Extinguisher (Wall Bracket)	Potter - Roemer	Model 3352	
	Fire Extinguisher Cabinet	Potter - Roemer	Alta 7062-DV	
	Fire Extinguisher Wall Bracket	Potter - Roemer	Model 3904	
Flagpoles	Flagpoles	Pole-Tech	PT306B Commercial Groundset Flagpole	
DIVISION 11				
Audio Visual Equipment	Automatic Projection Screen	Da-Lite	Tensioned Contour Electrol	
	Speakers	Electra-Voice	ZX3	
	Mobile Equipment Rack Cart	Da-Lite	21U	
Recreational Play Structures	Kindergarten Play Structure	Game Time	PowerScape Plus PowerScape	All About Play, Little Tykes
	Grade School Play Structure	Game Time	IONiX PowerScape	All About Play, Little Tykes
Athletic Equipment	Basketball Assembly	Porter Athletic Company	Backboard: 00267-698 Goal & Net: 00202-H00 Upright Padding: 00069-000	
			Center-strut Ceiling Hung Side Folding Front Braced (90955000)	
	Volleyball	Porter Athletic Company	01971 Powr-Rib II	
	Wall Protection Pads	Porter Athletic Company	OSB Board with Bonded Foam and Vinyl Covering	
	Tetherball Post & Ball Assembly	Porter Athletic Company	Posts: 00763-00 Ground Sleeve: 00402-000 Ball: 00763-100	
	Handball Wall Assembly	L.A. Steelcraft	Ball Wall	
	Maps	World Maps Online	UM-US	
	Maps	World Maps Online	UM-WORLD	

LODI USD DESIGN SPECIFICATION GUIDELINES

Edit Date: 12-14-2017

	SECTION	ITEM	MANUFACTURER	MODEL	NOTES
			DIVISION 12		
	Window Shades	Windows	Lutron	Sivoia Manual	
		Light-Filtering Fabric	Sheer Shade	Fiberglass Basketweave II	
		Single Roller Shade Assembly	Lutron	Roller 100 LFF - Darkening	
			DIVISION 14		
	Conveying Equipment	Vertical Platform Wheelchair Lift	Garaventa	Genesis Opal	or equivalent
			DIVISION 21		
	Fire Sprinkler	Fire Sprinkler Materials			
			DIVISION 22		
	Plumbing	Gate Valves	Hammond	Hammond IB641	
		Gate Valves	Hammond	Hammond IR-1138	
		Gate Valves	Mueller	Mueller Series 2360	
		Ball Valves	Nibco	Nibco T585-70	
		Ball Valves	Nibco	Nibco F-515-CS-F-66-FS	
		Ball Valves	Nibco	Nibco T-595-Y	
		Swing Check Valves	Stockham	Stockham B-321	
		Silent Check Valves	Nibco	Nibco Model T-480	
		Calibrated Balance Valves	Bell & Gossett Circuit Setter Plus		
		Building Gas Shut-Off Valve	Jomar	Jomar 175-LWN	
		Building Gas Shut-Off Valve	ReSun	ReSun D-126	
		Gas Shut-Off Valve Above Grade	Milwaukee	Milwaukee BB2-100	
		Seismic Gas Shut-Off Valve	Little Firefighter Corporation	NAGV, VAGV, AGV	
		Strainers for Potable Water	Watts	Watts LF777SI	
		Strainers for Potable Water	Watts	Watts 77F-DI-125	
		Valve Boxes	Christy	Christy No. G5 Traffic Valve Box	
		Valve Boxes	Christy	Christy No. F22	
		Valve Boxes	Brooks	Brooks No. 3-TL	
		Gauges	Marsh	Marsh "Series J"	
		Gauges/Thermostats		Pete's Plug II	
		Thermometers	Marsh	5" Diameter Bimetal Dial	
		Access Doors	Milcor	Style K	
		Access Doors	Milcor	Style DW	
		Access Doors	Milcor	Style M	
		Access Doors	Milcor	Style "Fire Rated"	
		Expansion Loops	Metraflex Inc.		
		Flexible Joints/Pipe Guides	Metraflex Inc.	Metraflex Metrasphere	
		Flexible Joints	Barco	Barco Ductile Iron	

LODI USD DESIGN SPECIFICATION GUIDELINES

Edit Date: 12-14-2017

SECTION	ITEM	MANUFACTURER	MODEL	NOTES
Plumbing Fixtures	Water Closet Wall Mounted	Kohler or American Standard	Kingston 1.28 No. K4325	With manual Sloan flush valves
	Flush Valve	Sloan or Zurn	Royal Optima 111-1.28 ES-S	
	Flush Valve	Sloan or Zurn	Royal 142-1.28	
	Urinal Wall Mounted	Kohler or American Standard	Bardon 1/8 GPF No. K-4904-ET	With manual Sloan flush valves
	Flush Valve	Sloan or Zurn	Royal 186 ES-S HEU 0.125 GPF	
	Lavatory	Kohler or American Standard	Kingston No. K-2005	
	Faucet/Valve	Chicago	116.121.AB.1 Sensor Faucet	
	Faucet/Valve	Chicago	697-ET2-665P SHABCP Model E2805	
	Faucet/Valve	Sloan	ETF-600 Sensor Faucet	
	Sink	Just Mfg. or Elkay	Model DRKADQ3119-65-BP	
	Faucet/Valve	Chicago	ECAST Model 350 Gooseneck	
	Faucet/Valve	Haws	5054LF Bubbler	
	Sink	Just Mfg or Elkay	Model LRADQ2219-65-BP	
	Faucet/Valve	Chicago	ECAST Model 50-317 Gooseneck	
	Sink	Just Mfg. or Elkay	Model LRADQ33-19-60	
	Faucet/Valve	Chicago	ECAST Model 1100-317	
	Solids Interceptor	Zurn	8715-2"	
	Service Sink	Kohler or American Standard	TNC-24-SH-SSC	
	Faucet/Valve	Chicago	Model 897-CP	
	Drinking Fountain	Haws or Elkay	1117L Dual Height, Wall Mount	Hi/Lo with bottle filler on chilled models
	Refrigerator Ice Maker	Guy Gray	Model SSIB2AB	
	Hose Bibb	Acorn or Woodford	Model 8121CR	
	Hose Bibb	Acorn or Woodford	Model 8126CR	
	Hose Bibb	Acorn or Woodford	5609QT	
	Hose Bibb	Acorn or Woodford	Model 8121CP	
	Wall Hydrant	Acorn or Woodford	M8104-E500	Freeze-less for exterior installations
	Wall Hydrant	Acorn or Woodford	Model 5509	Freeze-less for exterior installations
Plumbing Piping Systems	Drain and Waste Pipe Above Grade	AB & I		
	Joints Above Grade	ANACO-Husky		
	Drain and Waste Pipe Below Grade	AB & I		
	Joints Below Grade	ANACO-Husky	SD 4000	
	Joints Below Grade	Ty-Seal	Neoprene Gaskets	
	Grease Waste and Vent	AB&I		
	Gas Pipe Flexible Connection	Metraflex Inc.		
	Water Service Piping	J.M. Eagle		
	Gas Piping Underground	Performance Pipe	"DriscoPlex" 6500 PE 2708	
	Gas Piping Aboveground	Bonney	Bonney "Weldolet" Allied Pipe Fittings	
	Water Hammer Arrestors	PPP or MIFAB	Series 75000	
	Water Filters	Cuno Incorporated	Aqua Pure Model AP510	
	Hose Bibs	Acorn Engineering Co. or Woodford		Freezeless for exterior and roof installations
	Hose Station	Leonard	THS-25-VB-CW	
	Gas Pressure Regulating Valves	Elster	Model 1213B	

LODI USD DESIGN SPECIFICATION GUIDELINES

Edit Date: 12-14-2017

	SECTION	ITEM	MANUFACTURER	MODEL	NOTES
		Gas Pressure Regulating Valves	Elster	Model 1813C	
		Gas Pressure Regulating Valves	Elster	Models 1813, 1813B	
		Relieve Valves	Cash (A.W.) Valve Manufacturing Corporation		
		Trap Primer	MiFab, Inc. or PPP		
		Thermostatic Water Temperature Control Valve	Bradley Corporation		
		Cleanouts	Zurn	ZN-1400-KC	
		Cleanouts	Zurn	ZN-1400-X-DX	
		Cleanouts	Zurn	Z-1440A	
		Cleanouts	Zurn	Z-1441/Z-1443	
		Cleanouts	Zurn	Z-1449-BP	
		Cleanouts	Zurn	Z-1400-HD-KC	
		Floor Drains	Zurn		
		Floor Sinks	Zurn		
		Roof Drains and Overflow Drains	Zurn		
		Hopper Drains	Zurn		
	Plumbing Equipment	Concrete Grease Interceptor	Jensen or Pro Cast		
		Commercial Electric Water Heaters	Bradford White Coproration		
		Instantaneous Electric Water Heaters	Eemax or Chronomite Laboratories, Inc.		
		Gas Fired Water Heaters	Bradford White Corporation		
		Expansion Tanks	Zurn/Wilkins or Amtrol, Inc.		
		In-Line Domestic Hot Water Recirculation Pumps	Grundfos Pumps Corporation		
		Deionizer	Culligan	Model SS-50 Mixed Bed Deionized Water System	
			DIVISION 23		
	HVAC	Motor Starters	Allen Bradley	Square D	
		Access Doors	Milcor	Style K Style DW Style M Style "Fire Rated"	
	HVAC Equipment	Phase Protection	Sym Com	Model 201 A	
		Air Conditioning Unit	Lennox		
		Coil Guard	Micrometl		
		Modulating Power Exhaust Economizer	Micrometl		
		Split System AC Unit	Fujitsu or Lennox		
		Variable Refrigerant Flow	Fujitsu or Lennox		
		Variable Refrigerant Flow: Heat Pump Unit	Fujitsu or Lennox		
		Variable Refrigerant Flow: Branch Circuit Controls	Fujitsu or Lennox		
		Variable Refrigerant Flow: Energy Recovery Ventilator	Lossnay	LGH-F1200RX5	
		Exhaust Fan	Greenheck Fan Corporation		
		Transfer Fan	Greenheck Fan Corporation		
		Relief and Intake Vents	Lauren Cook Company		

LODI USD DESIGN SPECIFICATION GUIDELINES

Edit Date: 12-14-2017

	SECTION	ITEM	MANUFACTURER	MODEL	NOTES
		Air Filters	Tridem		No exceptions
		Ceiling Fan	Big Ass Fans	Essence Series	
		Exhaust/Intake/Relief Hood	Greenheck Fan	WRH	
		Backdraft Dampers	Ruskin	CBD2	
		Single Damper Blades: Self-locking Regulators	Ventlock	Ventlock 641	
		Single Damper Blades: End Bearings	Ventlock	Ventlock 607	
		Multiple Blade Dampers	Ruskin	CD35	
		High Velocity Dampers	Ruskin	CD50	
		External Insulated Duct: Self-locking Regulators	Ventlock	Ventlock 644	
		Fire Dampers	Ruskin	DIBD20 DIBD230	
		Fire Dampers: High Pressure/Velocity	Ruskin	FD60	
		Fire Dampers: Ceiling Installation	Ruskin	CFD 2/3/4/5 CFD7	
		Fire Dampers: Round Combination Smoke Fire	Ruskin	FSDR25 FSD60	
		Fire Dampers: 3-Hour Cominbation Smoke Fire	Ruskin	FSD60-3	
		Fire Dampers: Wall Type Combination Smoke Fire	Ruskin	FSD35 FSD60FA	
		Fire Dampers: Ceiling Type Combination Smoke Fire	Ruskin	FSD36C	
		Fusible Links	Ruskin	Ruskin 165F/350F Ruskin EFL Ruskin MCP2	
		Actuators	Bolemo		
		Ductwork	Ductmate		
		Ductwork: Duct Sealing	Design Polymerics	DP1010	
		Ductwork: Duct Sealing	Foster	Foster 30-36 Adhesives	
		Ductwork: Rectangular Duct Turning Vanes	SMC Duct/E-Z	E-Z Rail II	
		Ductwork: Rectangular Internally Insulated Duct Fabrication	Johns Manville	Duct Liner PM	
		Ductwork: Round Internally Insulated Duct and Fittings	McGill AirFlow, LLC.	Acousti-k27	
		Duct Access Doors	NCA Manufacturing, Inc.	AD-RD-87	
		Flexible Air Ducts	C.A. Schroeder, Inc.	Cal Flex 2PMJ	
		DIVISION 25			
	Facility Controls	Automation Facility Controls	Pelican or Allerton DDC		

LODI USD DESIGN SPECIFICATION GUIDELINES

Edit Date: 12-14-2017

SECTION	ITEM	MANUFACTURER	MODEL	NOTES
DIVISION 26				
Building Wire and Cable	Building Wire	America Insulated Wire Corp.		
	Metal-Clad Armored Cable	American Cable Systems		
	Flexible Cords and Cables	Carol Cable Company		
	Wiring Connectors and Terminations	Ideal		
Grounding and Bonding	Ground Rods	Weaver		
	Ground Wells	Oldcastle Precast		
	Ground Bushings	O-Z/Gedney		
Boxes	Outlet and Junction Boxes	Spring City Electrical Manufacturing Co.		
	Cast Boxes	Appleton Electric Co.		
	Floor Boxes	Legrand		
	Pull Boxes	Circle AW Products		
Cable Trays	Ladder-Type Cable Tray	Chatsworth Products, Inc.		
Hangers and Supports	Concrete Fasteners	Hilti	Kwik Bolt	
	Concrete Inserts and Construction Channel	Unistrut Corp.		
	Conduit Straps	O-Z/Gedney		
Conduit	Metal Conduit	Allied Tube and Conduit Co.		
	Fittings	Appleton Electric Co.		
Underground Ducts and Structures	Underground Precast Concrete Utility Structures	Christy Concrete Products		
	Conduit, Ducts and Fittings	Prime Conduit		
Signal Systems Raceway	"J" Hook Hanger	Unistrut Corp.		
Electrical Identification	Conduit and Wire Markers	Thomas and Betts Corp.		
	Inscription Tape	Kroy		
Network Lighting Control System	Network Lighting Control System	nLight/SensorSwitch		
Dry Type Transformers	Dry Type Transformers	Square D		
Switchboards	Switchboards	Square D		
Panelboards	Panelboards	Square D		
Cabinets and Enclosures	Hoffman Engineering Co.			
Wiring Devices	Switches, Receptacles and Coverplates	Pass & Seymour	#20AC Series #5362 Series #2091-S Series	
	Occupancy Sensor Switches	WattStopper		
	Floor Mounted Service Boxes	Legrand	#880C Series	
Overcurrent Protective Devices	Fuses	Bussmann Division, Cooper Industries		
	Circuit Breakers	Square D		
Disconnect Switches	Disconnect Switches	Square D		
Motor Controls	Manual Motor Starters	Square D		
Surge Protective Devices	Surge Protective Devices	Current Technology		
Exterior Lighting	LED Area Light	Gardco	P21-A1-1-5W-80LA-WW-UNIV	
	LED Area Light - Backlight Controlled Optics	Gardco	P21-A1-1-BLC-80LA-WW-UNIV	
	Pedestrian Scale LED Area Light	Gardco	SFP-T3-5W-55LA-WW-UNIV-AR	

LODI USD DESIGN SPECIFICATION GUIDELINES

Edit Date: 12-14-2017

SECTION	ITEM	MANUFACTURER	MODEL	NOTES
	4' Linear, Adjustable High Intensity LED Grazing Fixture	Color Kinetics	eW Graze Mix Powercore 523-000080-45	
	Solar Powered Rechargable LED Light - Motion Sensor Activated	Cooper Lighting	MSLED	
Interior Lighting	LEDs	General Electric		
	LED Drivers	Osram Sylvania		
	Emergency Batter Pack	Bodine		
	2'x4' Architectural Recessed LED Troffer	Lithonia	2FSL4-48L-EZ1-LP835-N100	
	2'x2' Architectural Recessed LED Troffer	Lithonia	2FSL2-33L-EZ1-LP835-N100	
	Suspended Indirect/Direct Linear LED Fixture	Fluxerx	VU1-S-A-D-35-A-LNEGTH-S-D-M-3-(A ***)	
	Recessed Linear LED Fixture	Finelite	HP4-WW-R-K-8'-SO-3500K-277V-SC-SF	
	Nominal 4' Long Surface Mounted Compact Linear LED Fixture	Philips	Fluxstream LF-4-FR-31-35-U-LAG + SVCC60-UNV	
	Nominal 4' Long Surface Mounted Compact Linear LED Fixture - with Batter Pack	Philips	Fluxstream LF-4-FR-31-35-U-LAG-EM + SVCC60-UNV	
	Nominal 4' Long Surface Mounted Compact Linear LED Fixture - Increased Lumen Output and 0-10V Dimming	Philips	Fluxstream LF-4-10-41-35-U-DZT	
	Nominal 6" Square Slim Surface moutned LED Fixture	Philips	Slim Surface S6S830K10	
	2'x4' Recessed LED Troffer	Metalux	2GRLD1-6400-A125-UNV-L835-CD-1	
	Suspended LED Area Light	Cree	CXBW16-CL16 + CXB-A-JP-H-40K-8-UL-10V + SC-5	
	LED Exit Sign	Eventlite	TLP-G-2U-W	
	LED Downlight	Gotham	EVO-SQ-35-15-6AR-LSS-MVOLT-EZ1	
	Exterior LED Wall Sconce	WAC	WP-LED127-30-GH	
		DIVISION 27		
Telecomunication Cabling Systems	Equipment Racks and Cable Runways	Middle Atlantic		
	Bonding Strap	Panduit		
	Bonding Connectors and lugs	Panduit		
	Backbone Fiber Optic Cable	General Cable		
	Backbone Twisted Pair Cable	General Cable		
	Backbone Twister Pair Terminations	General Cable		
	Horizontal Twisted Pair and Modular Patch Cord Cable	Panduit		
	Horizontal Twisted Pair and Modular Patch Cord Terminations	Panduit		
Audio Visual System	Projectors	Epson		
	Interactive Flat Screen TV	Promethean Boards		
Assistive Listening System	Assistive Listening System	Williams Sound		
Campus Communication System	Bogen or Rauland			
Clock Systems	Clock System	Rauland		

LODI USD DESIGN SPECIFICATION GUIDELINES

Edit Date: 12-14-2017

SECTION	ITEM	MANUFACTURER	MODEL	NOTES
DIVISION 28				
Access Control	Accugardian			Entry Management Pelican/Novar
Security Camera System	Milestone Software			
Security Alarm Monitoring System	Security Alarm Monitoring System	Alamo Intrusion Alarm		Confirm with District's Facilities Dept. on each site
Fire Alarm System	Manual Pull Stations	Edwards		
	Heat Detectors	Edwards	Addressable Model	
	Photoelectric Smoke Detectors	Edwards		
	Duct Smoke Detectors	Edwards		
	Notification Device: Speaker	System Sensor Wall Speaker	Model SPV	
	Notification Device: Strobe, Strobe/Speaker	Gentex Corp		
	Notification Devices: Remot Power Supply for Strobe Circuits	Edwards		
DIVISION 31				
Earthwork	Decomposed Granite Solidifier	PolyPavement		
Termite Control	Termiticides	BASF or Wilco	Termidor SC	
Vegetation Control	Soil Herbicide	Roundup Promax		
DIVISION 32				
Asphalt Concrete Paving	Soil Sterilizer	Ciba Ceigy	Pramatol 25-E	
	Seal Coat Select Fillers and Fibers	Western Colloid Products	Park-Top No. 302	
	Pavement Epoxy	K-Lite	Ktepx-590	
	Crack Filler	QPR	CAR08	
	Crack Filler	Conoco, Inc.	Docal 1100 Viscolastic	
	Crack Filler	Topeka	Hot Mix	
Concrete Paving	Anchoring Cement	Por-Rok		
	Integral Color	Davis Color	Mix Ready (Pre-bagged)	
Tactile Warning Surfacing	Modular Paver Tiles (Cast-in-place)	Access Tile	Cast In Place Replaceable	
	Fasteners (Surface mount)	Access Tile		
Synthetic Resilient Surfacing	Synthetic Resilient Surfacing	Robertson Recreational Surfaces	TotTurf Aliphatic	
Unit Masonry Retaining Walls	Modular Concrete Retaining Wall	Basalite	Keystone, Standard	
	Construction Adhesive	Basalite	Keystone Kapseal	
Site Furnishings	Bicycle Lockers - Class 1	Creative Pipe, Inc.	CS1-C Common Wall	
	Bicycle Racks - Class III	Ribbon Rack, Inc.	RB 09 and RB 07	
	Skateboard - Vertical Dock	Park a Bike	Skatedock, SM-10	
	Wheel Stops	West Coast Rubber, Ground Rubber Solutions	Ground Rubber Wheel Stop	
	Skate Deterrents	Barret Robinson	Skate Stoppers, FA-FR FA 135	
Chain Link Fences	Swinging Gates	BFC		Door King accessories
	Single Man Gate: Exit Device	Von Duprin	Series 22 Exit Device (22NL)	
	Single Man Gate: Closer	Lockey	TB600 Hydraluic Gate Closer	
	Electric Gate Operators and Controls	LiftMaster	Elite CSW24VDC	

LODI USD DESIGN SPECIFICATION GUIDELINES

Edit Date: 12-14-2017

	SECTION	ITEM	MANUFACTURER	MODEL	NOTES
	Decorative Metal Fences	General Fence	Monumental Iron Works	Imperieal Fence - Style B	Door King accessories
		Double/Single Man Gate: Exit Device	Von Duprin	Series 22 Exit Device (22NL)	
		Double/Single Man Gate: Closer	Lockey	TB600 Hydraluic Gate Closer	
		Gate Operators	Lift Master	Elite CSW24VDC	
	Landscape Irrigation	Irrigation	Rainbird or Hunter		
	Landscape Planting	Tree Staking Material	Arthur Enterprises	Tie-It Super Tree Ties	
		Filter Fabric	Fabriscape Inc.	Landscape Filter/drain Fabric	
		Mulch	Weyerhaeuser Company	Siva-Fiber	
		Root Barrier	NDS	EP series	
		Weed Control	Ubjohn	Enide	
		Fungicide	Cibe-Geigy	Subdue	
		Binders	AZ-TAC Products, Inc.	AM-TAC	

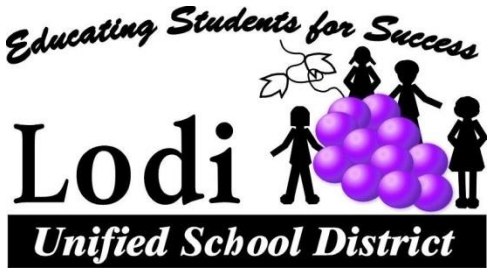

1305 E. Vine Street

Lodi, California 94513

(209) 953-8111

Door Hardware
Specification Guidelines
December 14, 2017

SPECIFICATION GUIDELINE
Manufacturers and Products

DOOR HARDWARE
SPECIFICATION GUIDELINES

The purpose of this booklet is to support the school districts building guidelines for door hardware. The school district maintains the following hardware and is currently stocking replacement parts. The products listed in this booklet are pursuant to Public Contract Code Section 3400. The following products are designated by brand name in order to match other products in use on a particular improvement, either completed or in the course of completion. **Products shown are Basis of Design, substitutions subject to District's approval.**

It is the intent of this booklet to provide guidelines for the architect's specification section 087100, for product groups and the hardware schedule. It remains the architect's responsibility to coordinate these products to meet the applicable building codes, life safety codes, and Accessible requirements.

Section 087100 Door Hardware preamble must specify the following:

Door and Frame Prep

Before hardware installation, verify that all doors and frames are properly prepared to receive the specified hardware. Hollow metal frames shall be prepared for ANSI strike plates per A115.1-2 (4-7/8" high), hinge preps will be mortised and reinforced with a minimum of 8-gauge reinforcement material for closer installation. Hollow metal doors shall be properly prepared and reinforced with a minimum or 16-gauge material for either mortised or cylindrical locks as specified. It is preferred that all hollow metal doors receiving door closers have 12-gauge reinforcement. If this is not possible, the use of sex bolts is mandatory. Wood doors shall be factory prepared to receive the scheduled hardware.

Hardware installation

The manufacturer's representative for the locking devices and closing devices must inspect and approve, in writing, the installation of their products. Hardware installed incorrectly must be reported to the architect prior to the architect's final punch list.

SPECIFICATION GUIDELINE
Manufacturers and Products

DOOR HARDWARE

Description	Manufacturer	Model Series	Finish
Hanging Device			
Continuous Hinge	Ives	224HD (At All Locations)	CL
Securing Devices		**Cylindrical Locks**	
Lock Set	Schlage	ND Series x Rhodes:	
		ND10S Passage Lock	
		ND40S Privacy Lock	
		L9485x06AxL283-722 Faculty Restroom Lock (Faculty – single compartment toilet)	626
		ND91PD Office Lock	
		ND50PD Classroom Security Lock: At Elementary Schools	
		ND95PD Classroom Security Lock: At Middle and High Schools	
Exit Device	Von Duprin	CD-AX-99NLx910NL Ives "Vandal Resistant Trim Pull"	US26D
		CD-AX-99NLx910NL Ives "Trim Pull" x AX-99DTx910DT "Pull" x SNB x KR4954 Mullion x 154 (at pairs)	US26D
		AX-99L-2-F-996L (F-rated single doors)	US26D
		AX-99L-2-F-996L x AX99EO-F x KR9954 Mullion x 154 (F pairs)	US26D
		• **All mullions to have a set of #154 stabilizers**	
Padlock	Schlage	KS43D2200 (Padlock)	Brass
Key System	Schlage	**LUSD to verify Schlage Primus Patented Keyway**	
Coordinator	Ives	COR x FL x MB (Storage & Utility rooms)	USP
		• **Use coordinator only where required by fire code**	
Flush Bolts	Ives	FB31P (Automatic) (metal doors) (Storage & Utility rooms)	US26D
		FB41P (Automatic) (wood doors) (Storage & Utility rooms)	US26D
		FB51P (Manual) (metal doors) (Storage & Utility rooms)	US26D
		FB61P (Manual) (wood doors) (Storage rooms)	US26D
Closing Device			
Closer	LCN	4040 "Super Smoothie RW/PA/TB	689
		• **Furnished and installed all door closers with thru bolts**	
		• **All door frames to be reinforced for soffit shoe**	
Stop and Holders			
Stop Holders	Ives	WS45 (Automatic Holders & Stops)	US26D
		FS43 (Automatic Door Stops & Holders)	US26D
		FS436/R435 (Interior Floor Stop)	US26D
		FS18S (Security Floor Stops)	Black
		WS401/WS402 (Wall Stops)	US26D

SPECIFICATION GUIDELINE
Manufacturers and Products

DOOR HARDWARE

Description	Manufacturer	Model Series	Finish
Protective Plates and Trim			
Kick Plate	Ives	8400 Series	US26D
Mop Plate	Ives	8400 Series	US26D
Push/Pull Plates	Ives	8200/8300 Series	US26D
Latch Protector	Ives	LG12	US32D
Door Silencer	Ives	SR64	Gray
Accessories			
Threshold	ZERO	654A	Alum
		655A	Alum
		623A	Alum

• **Threshold Notes** - Architect to coordinate with project conditions. Set thresholds in a full bed of butyl-rubber or polyisobutylene mastic sealant complying with requirements in Division 7 “Thermal and Moisture Protection”. Use 1/4-inch fasteners, red-head flat-head sleeve anchors (SS/FHSL).

Auto Door Bot.	ZERO	360AA	Clear
Door Sweep	ZERO	328AA	Clear
Weather stripping	ZERO	488S-Bk	Black
		8780N	
Meeting Stiles	ZERO	328AA	Clear
		44STST	Alum
Head & Jamb	ZERO	328AA	Clear
		326AA	Clear
		429A	Alum
		142A	Alum

Pemco is an acceptable alternate for Thresholds and Weather Stripping Products

End of Specification

224HD Full Mortise Aluminum Geared Continuous Hinge

- Handing required when modified
- Door Edge Protector
- 48" Maximum Door Width
- 1/16" Door Inset
- Beveled or Square Edge Doors

For Doors Weighing up to 450 pounds without reinforcing, 600 pounds with reinforcing

Standard lengths 83", 85", 95", 120"
Standard Mounting Hardware
12-24 X 3/4" Steel Self Drilling, Self Tapping Screws
Optional WD - Wood Screws or SEC - Security Fasteners Available

Finishes

Clear (CL), Dark Bronze (DB)

Custom Anodizing and Painting are available, consult factory.

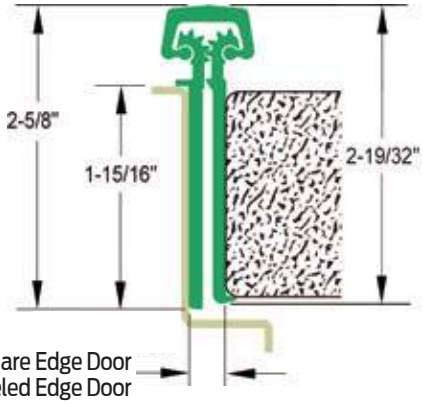

EPT 112HD **EPT 224HD** **TW 112HD 224HD**

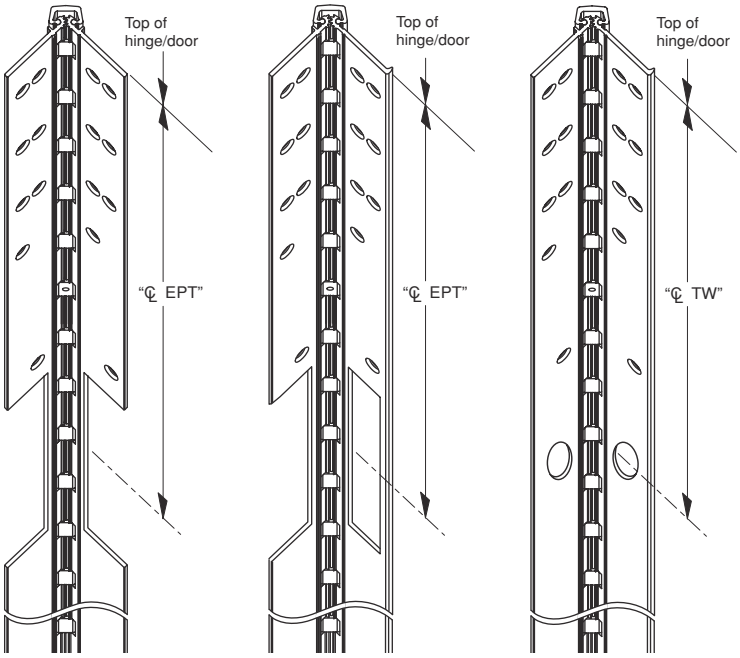

Note: See ordering guide in price book for proper placement.

Electrical Cutouts

Ives Aluminum Geared Continuous Hinges are available with factory modified cutouts to accommodate most electrical frame to door requirements. Special templates are required.

When ordering indicate the following:
1. Opening size.
2. Handing. LH, RH, RHR or LHR.
3. Manufacturer and model number of the electrical product being used. Example; Von Duprin EPT2

Because clearances may vary between door and frame manufacturer, and locations can be influenced by the door hardware it is always recommend contacting Ives Customer Technical for specific template information.

For your general information below are standard locations for Von Duprin EPT2 or EPT10, and monitor switch.

From Top Edge of Door to Center Line of Cut-Out

Standard Length	112HD EPT	224HD EPT	112HD/224HD TW
83"	30"	30"	41-1/2"
85"	32"	32"	42-1/2"
95"	42"	42"	57-3/4"
120"	67"	67"	81-25/32"

TWP option centered in hinge.

112HD Full Mortise Aluminum Geared Continuous Hinge

- Non Handed
- Flush Mounted, No Inset
- 48" Maximum Door Width
- Beveled or Square Edge Doors

For Doors Weighing up to 450 pounds without reinforcing, 600 pounds with reinforcing

Standard lengths 83", 85", 95", 120"
Standard Mounting Hardware
12-24 X 3/4" Steel Self Drilling, Self Tapping Screws
Optional WD - Wood Screws or SEC - Security Fasteners Available

Finishes
Clear (CL), Dark Bronze (DB)
Custom Anodizing and Painting are available, consult factory.

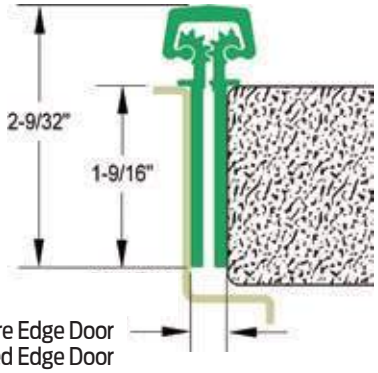

5/16" Clearance for Square Edge Door
1/32" Clearance For Beveled Edge Door

157XY Full Surface, Center Pivot Aluminum Geared Continuous Hinge

- Non Handed
- Narrow Frame
- 1/16" Door Inset
- 48" Maximum Door Width
- Beveled or Square Edge Doors
- A patented easy-to-install, heavy duty, full surface continuous hinge
- Lateral and vertical adjustability while the door is still hanging

For Doors Weighing up to 550 pounds

Standard lengths 83", 95", 119"
Standard Mounting Hardware
12-24 X 1/2" Steel Self Drilling and Tapping Screws,
Optional Wood Screws and Security Fasteners Available
Custom Paint Finish Available

Finishes
Clear (CL), Dark Bronze (DB)

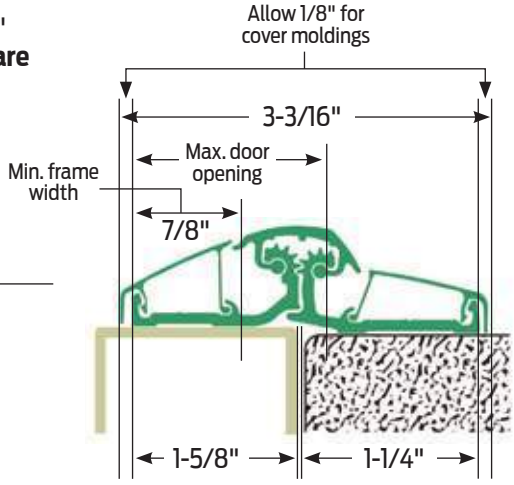

Meets ANSI/BHMA A156.1
A8111 – Steel
A5111 – Stainless Steel
A2111 – Brass

5BB1HW 5 Knuckle, Ball Bearing, Heavy Weight Full Mortise Hinge

- For heavy weight doors
- High frequency usage
- 4 ball bearing
- Packed with wood and metal screws

Options

- NRP, Non-Removable Pin
- SH, Security Stud
- HT, Hospital Tip
- RC, Round Corners - 1/4" or 5/8" Radius
- SEC, Security Fastners - Pin-in-Socket

Dimensions

Size (Inches)	Size (mm)	Gauge	Size (Inches)	Size (mm)	Gauge
4.5 x 4	114 x 102	0.180	5 x 4.5	127 x 114	0.190
4.5 x 4.5	114 x 114	0.180	5 x 5	127 x 127	0.190

Meets ANSI/BHMA A156.1
A8111 – Steel

5BB1WT 5 Knuckle, Ball Bearing, Wide Throw Full Mortise Hinge

- For medium weight doors
- Medium frequency usage
- 2 ball bearing
- Packed with wood and metal screws

Options

- NRP, Non-Removable Pin
- SH, Security Stud
- HT, Hospital Tip
- RC, Round Corners - 1/4" or 5/8" Radius
- SEC, Security Fastners - Pin-in-Socket

Dimensions

Size (Inches)	Size (mm)	Gauge
4.5 x 5	114 x 127	0.134
4.5 x 6	114 x 152	0.134
5 x 6	127 x 152	0.146
5 x 7	127 x 178	0.146
5 x 8	127 x 203	0.146

Finishes *brass*

Ives Finish	US3	US4	US10	US10B	US10A	US11	US15	US26	US26D
BHMA	605	606	612	613	614	616	619	625	626

Finishes *steel*

Ives Finish	USP	US3	US4	US10	US10B	US10A	US11	US15	US26	US26D
BHMA	600	632	633	639	640	641	643	646	651	652

Finishes *stainless steel*

Ives Finish	US32	US32D
BHMA	629	630

Meets ANSI/BHMA A156.1
A8133 – Steel
A5133 – Stainless Steel
A2133 – Brass

5PB1 5 Knuckle, Plain Bearing Full Mortise Hinge

- For standard weight doors
- Low frequency usage
- Packed with wood and metal screws

Not for use with a door closer.

Options

- NRP, Non-Removable Pin
- SH, Security Stud
- HT, Hospital Tip
- RC, Round Corners - 1/4" or 5/8" Radius
- SEC, Security Fastners - Pin-in-Socket

Dimensions

Size (Inches)	Size (mm)	Gauge
3.5 x 3.5	89 x 89	0.123
4 x 4	102 x 102	0.134
4.5 x 4	114 x 102	0.134
4.5 x 4.5	114 x 114	0.134
5 x 4.5	127 x 114	0.134

Meets ANSI/BHMA A156.1
A8112 – Steel
A5112 – Stainless Steel
A2112 – Brass

5BB1 5 Knuckle, Ball Bearing Full Mortise Hinge

- For standard weight doors
- Medium frequency usage
- 2 ball bearing
- Packed with wood and metal screws

Options

- NRP, Non-Removable Pin
- SH, Security Stud
- HT, Hospital Tip
- RC, Round Corners - 1/4" or 5/8" Radius
- SEC, Security Fastners - Pin-in-Socket

Dimensions

Size (Inches)	Size (mm)	Gauge	Size (Inches)	Size (mm)	Gauge
3.5 x 3.5	80 x 102	0.130	5 x 4.5	127 x 114	0.146
4 x 4	102 x 102	0.130	5 x 5	127 x 127	0.146
4.5 x 4	114 x 102	0.134			
4.5 x 4.5	114 x 114	0.134			

Finishes *brass*

Ives Finish	US3	US4	US10	US10B	US10A	US11	US15	US26	US26D
BHMA	605	606	612	613	614	616	619	625	626

Finishes *steel*

Ives Finish	USP	US3	US4	US10	US10B	US10A	US11	US15	US26	US26D
BHMA	600	632	633	639	640	641	643	646	651	652

Finishes *stainless steel*

Ives Finish	US32	US32D
BHMA	629	630

ND Series

Grade 1 cylindrical lock

Overview

The ND Series has long been one of Schlage's best selling mechanical locks for good reason - it's tough, durable and fits a wide variety of applications.

Now we've made our trusted ND Series lock even better by making it easier to install. We've added these enhancements because we know that a lock installed correctly the first time will last longer and perform better. And the longer the lock lasts, the lower the cost of ownership over the life of the lock.

We've also beefed up our warranty to provide 10 years of coverage. The result: greater peace of mind that every door is safe and secured with a lock built to last.

A simpler, smarter ND Series lock

Built-in durability exceeds ANSI/BHMA grade 1 cycle test requirements

Chassis-to-door alignment
the yellow gauge takes the guesswork out door adjustment by providing a positive stop that can be adjusted to the most common thickness of 1-5/8", 1-3/4", 2" and 2-1/8" and still allows minor adjustments for added equipment

Optional Vandlgard® lever
protects against damage from excessive force and vandalism

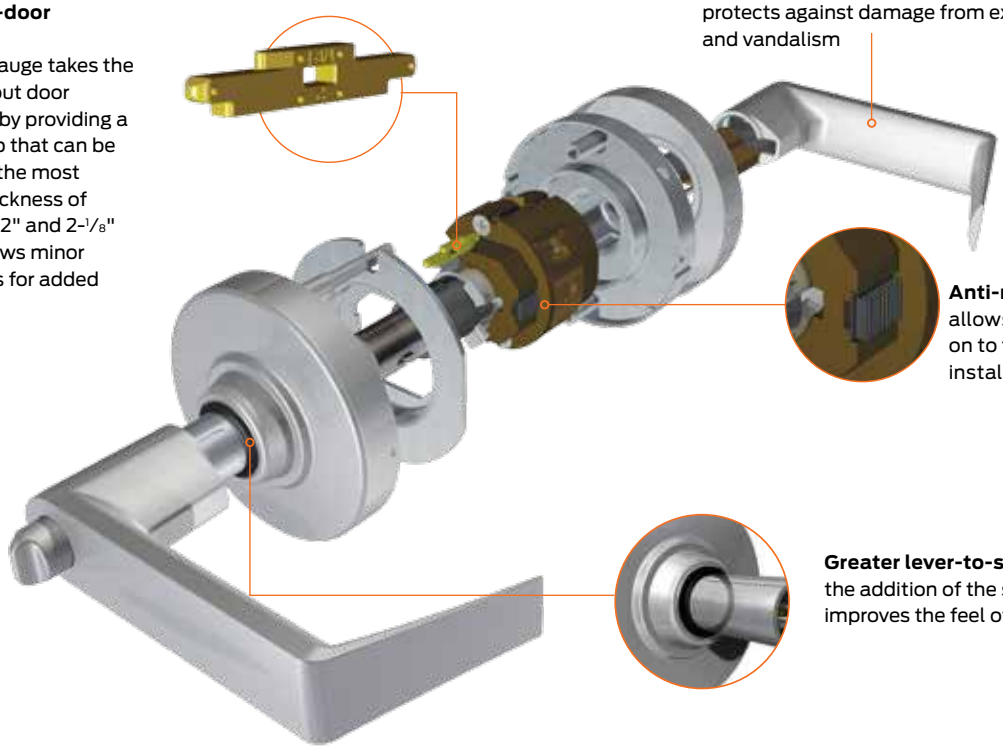

Anti-rotation plate retention
allows the plate to be "snapped" on to the chassis making installation easier

Greater lever-to-spindle engagement
the addition of the soft durometer spacer improves the feel of the lever during actuation

ND Series continuous improvements

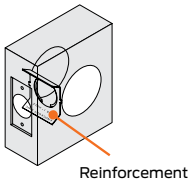

Door reinforcement
Prevents the collapse of hollow metal doors when locksets are tightly mounted. The unit works with 1 3/8" and 1 3/4" thick doors.

New lever removal tool
The ergonomic design is bigger, stronger and works for both the ND and L series locks. Sold separately.

Chassis slide
In 2010, we redesigned the slide in order to increase the locks overall durability and improve component alignment.

Locking lug and key cam
In 2009 we improved the locking lug and keycam by making them stronger and more resistant to damage.

About Allegion

Allegion (NYSE: ALLE) creates peace of mind by pioneering safety and security. As a $2 billion provider of security solutions for homes and businesses, Allegion employs more than 8,000 people and sells products in more than 120 countries across the world. Allegion comprises 27 global brands, including strategic brands CISA®, Interflex®,LCN®, Schlage® and Von Duprin®. For more, visit **www.allegion.com**

aptiQ ■ LCN ■ SCHLAGE ■ STEELCRAFT ■ VON DUPRIN

ALLEGION™

© 2014 Allegion
006486, Rev.08/14
allegion.com

Lock Functions | ANSI A156.2 Series 4000 Grade 1

Non-Keyed Locks

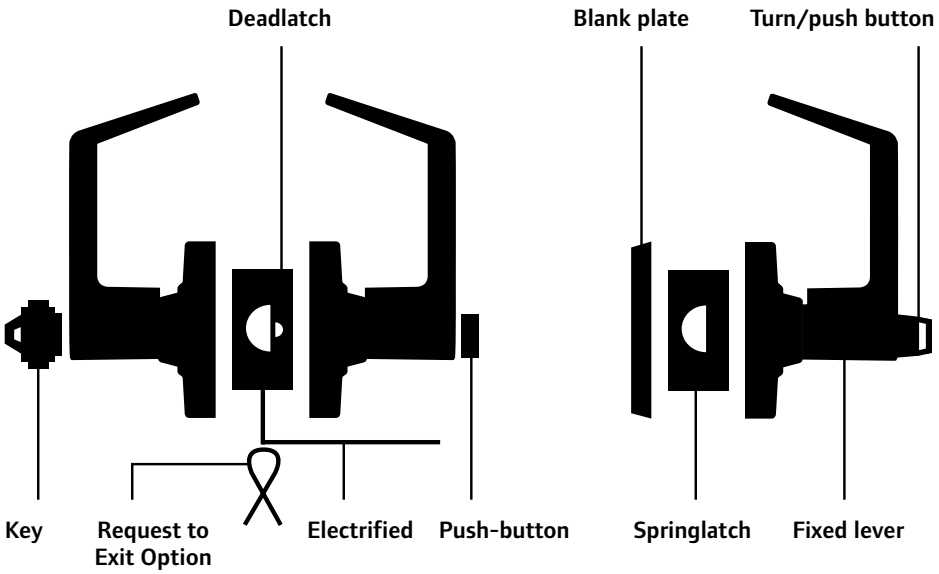

SCHLAGE	ANSI
ND10S	**F75**

Passage Latch

- Both levers always unlocked.

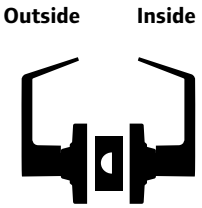

SCHLAGE	ANSI
ND12D	**F89**

Exit Lock

- Outside lever always fixed.
- Inside lever always unlocked.

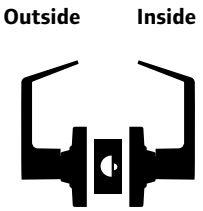

SCHLAGE	ANSI
ND12DEL	**-**

Electrically Locked (Fail Safe)

- Outside lever continuously locked electrically.
- Unlocked by switch or power failure.
- Auxiliary latch deadlocks latchbolt when door is closed.
- Inside lever always free for immediate exit.

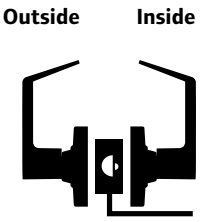

SCHLAGE	ANSI
ND12DEU	**-**

Electrically Unlocked (Fail Secure)

- Outside lever continuously locked until unlocked by electric current.
- Auxiliary latch deadlocks latchbolt when door is closed.
- Inside lever is always free for immediate exit.

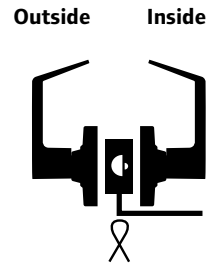

SCHLAGE	ANSI
ND25D	**-**

Exit Lock

- Blank plate outside.
- Inside lever always unlocked.

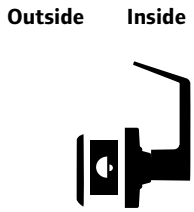

Standard cylinder.

Safe School Locks.

FSIC - full size interchangeable core option.

SFIC - small format interchangeable core option.

† **Caution:**
Double cylinder locks are a life safety hazard in times of emergency and their use is not recommended. Installation should be in accordance with existing codes only.

Keyed Locks

SCHLAGE ANSI

ND40S **F76**

Bath/Bedroom Privacy Lock

- Push-button locking.
- Can be opened from outside with a small screwdriver.
- Turn inside lever or close door to release button.

Outside **Inside**

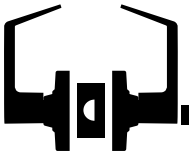

SCHLAGE ANSI

ND44S **-**

Hospital Privacy Lock

- Push-button locking.
- Unlocked from outside by turning emergency turn-button.
- Turn inside lever or close door to release button.

Outside **Inside**

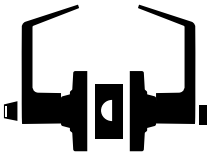

SCHLAGE ANSI

ND170

Single Dummy Trim

- Dummy trim for one side of door.
- Used for door pull or as matching inactive trim.

Outside/Inside

SCHLAGE ANSI

ND50PD **F82**

Entrance/Office Lock

- Push-button locking.
- Push-button locks outside lever until it is unlocked with key or by turning inside lever.

Outside **Inside**

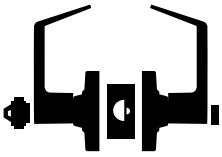

SCHLAGE ANSI

ND53PD **F109**

Entrance Lock

- Turn/push-button locking: Pushing and turning the button locks the outside lever, requiring use of a key until the button is manually unlocked.
- Push-button locking: Pushing button locks outside lever until unlocked by key or by turning the inside lever.

Outside **Inside**

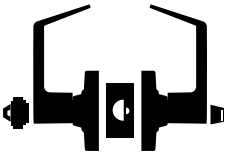

SCHLAGE ANSI

ND60PD **F88**

Vestibule Lock

- Latch retracted by key from outside when the outside lever is unlocked by key in inside lever.
- Inside lever is always unlocked.

Outside **Inside**

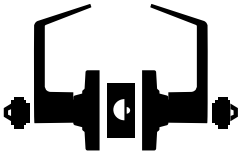

SCHLAGE ANSI

ND66PD **F91**

Store Lock†

- Key in either lever locks or unlocks both levers.

Outside **Inside**

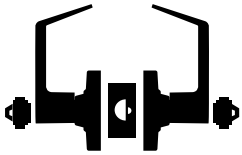

SCHLAGE ANSI

ND70PD **F84**

Classroom Lock

- Outside lever locked and unlocked by key.
- Inside lever always unlocked.

Outside **Inside**

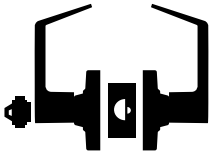

Lock Functions | ANSI A156.2 Series 4000 Grade 1

Keyed Locks (continued)

SCHLAGE ND73PD — ANSI F90

Corridor Lock

- Locked or unlocked by key from outside.
- Push-button locking from inside.
- Turn inside lever or close door to release button.
- When outside lever is locked by key it can only be unlocked by key.
- Inside lever is always unlocked.

Outside **Inside**

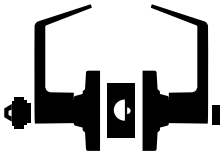

SCHLAGE ND75PD — ANSI -

Classroom Security Lock

- Key in either lever locks or unlocks outside lever.
- Inside lever is always unlocked.

Outside **Inside**

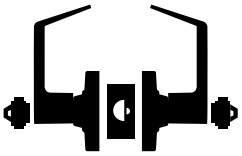

SCHLAGE ND80PD — ANSI F86

Storeroom Lock

- Outside lever is fixed.
- Entrance by key only.
- Inside lever always unlocked.

Outside **Inside**

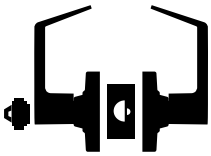

SCHLAGE ND80PDEL — ANSI -

Electrically Locked (Fail Safe)

- Outside lever continuously locked electrically.
- Unlocked by key outside or by switch or power failure.
- Auxiliary latch deadlocks latchbolt when door is closed.
- Inside lever always free for immediate exit.

Outside **Inside**

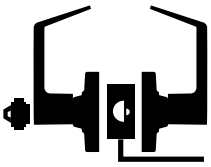

SCHLAGE ND80PDEU — ANSI -

Electrically Unlocked (Fail Secure)

- Outside lever continuously locked until unlocked by key or electric current.
- Auxiliary latch deadlocks latchbolt when door is closed.
- Inside lever always free for immediate exit.

Outside **Inside**

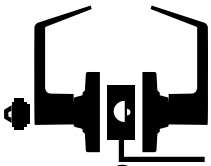

SCHLAGE ND82PD — ANSI F87

Institution Lock†

- Both levers are fixed.
- Entrance by key in either lever.

Outside **Inside**

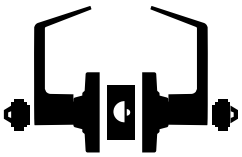

SCHLAGE ND85PD — ANSI -

Faculty Restroom Lock

- Outside lever is fixed.
- Entrance by key only.
- Push-button in inside lever activates visual occupancy indicator, allowing only emergency master key to operate.
- Turn inside lever or close door to release visual occupancy indicator.
- Rotation of inside spinner-button provides lock-out feature by keeping indicator thrown.

Outside **Inside**

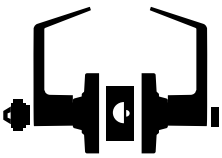

Vandlgard Functions

SCHLAGE ND91PD — ANSI F82

Entrance/Office Lock

- Push-button locking.
- Push-button disengages outside lever until locked with key or by turning inside lever.
- Vandlgard is designed to disengage outside spindle from latch when locked.

Outside **Inside**

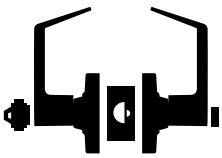

Standard cylinder.

Safe School Locks.

FSIC - full size interchangeable core option.

SFIC - small format interchangeable core option.

† **Caution:**
Double cylinder locks are a life safety hazard in times of emergency and their use is not recommended. Installation should be in accordance with existing codes only.

SCHLAGE ANSI

ND92PD **F109**

Entrance Lock

- Turn/push-button locking: Pushing and turning button disengages outside lever, requiring using of key until button is manually unlocked.
- Push-button locking: Pushing button disengages outside lever until unlocked by key or by turning inside lever.
- Vandlgard is designed to disengage outside spindle from latch when locked.

Outside **Inside**

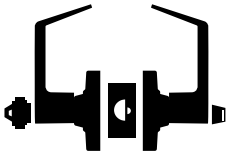

SCHLAGE ANSI

ND93PD **F88**

Vestibule Lock

- Latch retracted by key from outside when outside lever is disengaged by key in inside lever.
- Inside lever is always unlocked.
- Vandlgard is designed to disengage outside spindle from latch when locked.

Outside **Inside**

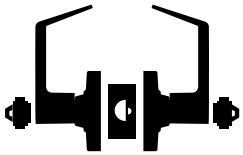

SCHLAGE ANSI

ND94PD **F84**

Classroom Lock

- Outside lever disengaged and unlocked by key.
- Inside lever always unlocked.
- Vandlgard is designed to disengage outside spindle from latch when locked.

Outside **Inside**

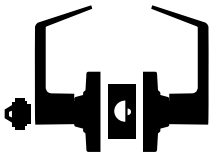

SCHLAGE ANSI

ND95PD **-**

Classroom Security Lock

- Key in either lever locks or unlocks outside lever.
- Inside lever is always unlocked.

Outside **Inside**

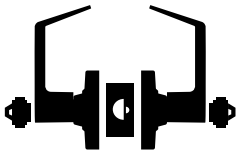

SCHLAGE ANSI

ND96PD **F86**

Storeroom Lock

- Outside lever always disengaged.
- Entrance by key only.
- Inside lever is always unlocked.
- Vandlgard is designed to disengage outside spindle from latch when locked.

Outside **Inside**

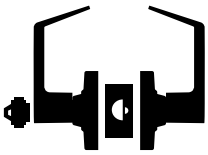

SCHLAGE ANSI

ND96PDEL **-**

Electrically Locked (Fail Safe)

- Outside lever continuously disengaged electrically.
- Unlocked by key outside or by switch or power failure.
- Auxiliary latch deadlocks latchbolt when door is closed.
- Inside lever always free for immediate exit.
- Vandlgard is designed to disengage outside spindle from latch when locked.

Outside **Inside**

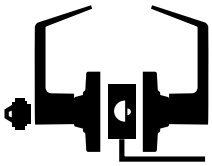

SCHLAGE ANSI

ND96PDEU **-**

Electrically Unlocked (Fail Secure)

- Outside lever continuously disengaged until unlocked by key or electric current.
- Auxiliary latch deadlocks latchbolt when door is closed.
- Inside lever always free for immediate exit.
- Vandlgard is designed to disengage outside spindle from latch when locked.

Outside **Inside**

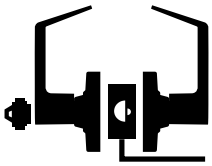

SCHLAGE ANSI

ND97PD **F90**

Corridor Lock

- Locked or unlocked by key from outside.
- Push-button locking from inside.
- Turning inside lever or closing door releases button.
- When outside lever is locked by key it can only be unlocked by key.
- Inside lever is always unlocked.
- Vandlgard is designed to disengage outside spindle from latch when locked.

Outside **Inside**

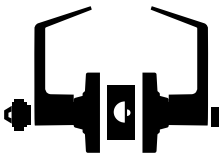

Specifications

Handing:
All ND-Series lever locksets are non-handed.

Door Thickness:
1 5/8″ to 2 1/8″ (41mm–54mm) standard including Vandlgard® functions. 1 3/4″ - 2″ for function D85. See accessories (Page 21) for spacers required for 1 3/8″ doors.

Backset:
2 3/4″ (70 mm) standard. 2 3/8″, 3 3/4″ and 5″ (60 mm, 95 mm, 127 mm) optional.

Faceplate:
Brass, bronze or stainless steel. 1 1/8″ x 2 1/4″ (29 mm x 57mm) square corner, beveled.

Lock Chassis:
Zinc plated for corrosion resistance.

Latch Bolt:
Steel, 1/2″ (12mm) throw, deadlocking on keyed and exterior functions. 3/4″ (19 mm) throw anti-friction latch available for pairs of fire doors.

Exposed Trim:
Levers: Pressure cast zinc, plated to match finish symbols.
Roses: Brass, bronze or zinc.

Strike:
ANSI curved lip strike 1 1/4″ x 4 7/8″ x 1 3/16″lip to center standard. Optional strikes, lip lengths and ANSI strike box available. See page 21.

Cylinder & Keys:
6-pin Everest C123 keyway standard with two patented nickel silver keys per lock.

Keying Options:
Interchangeable core and Primus high security cylinders. Master keying, grand master keying and construction keying.

Warranty:
Seven-year limited for all functions including Vandlgard.

Certifications

ANSI:
Meets or exceeds A156.2 Series 4000, Grade 1 strength and operational requirements. Meets A117.1 Accessibility Code.

Federal:
Meets FF-H-106C Series 161.

California State Reference Code:
(Formerly Title 19, California State Fire Marshal Standard) All levers with less than 1/2″ (64mm) returns comply; Schlage levers return to within 1/2″ of door face.

MEA Certification:
All electrified locking (fail-safe, unlocked by switch or power failures) functions accepted for use in New York City by the City of New York, Department of Buildings (MEA 24-04-E).

All levers with less than 1/2″ (64mm) returns comply with California Fire Safety Codes.

Florida Building Commission:
3/4″ and 1/2″ throw latch approved for Hurricane Resistance with Miami-Dade County, Florida.

UL / cUL:
All locks listed for A label single doors, 4′ x 8′.
Letter F and UL symbol.

ADA Compliant:
Schlage Lock Company offers a wide selection of locks designed to meet the Americans With Disabilities Act.

Door Preparation

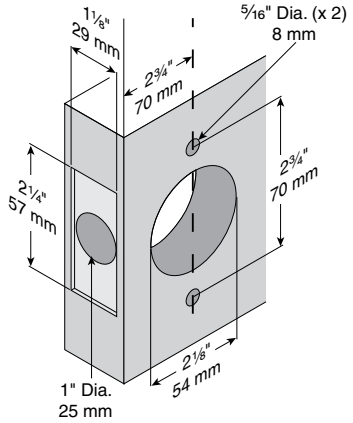

ALLEGION™

SCHLAGE®

L Series

Commercial mortise locks

The Standard Collection

Built on our tradition of raising industry standards.

Like the M Collection, these lever designs suite with exit devices and locks from our trusted Schlage and Von Duprin brands. And, they are built to the same exacting standards. Our Standard Collection levers offer a more traditional style that is appropriate for use in a number of commercial applications.

01

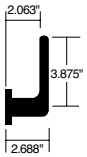

02

03

12

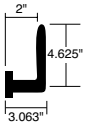

17

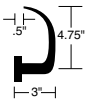

18

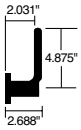

Longitude

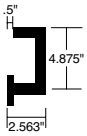

Merano

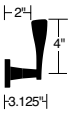

Omega

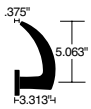

Finish options											
Color	Bright brass	Satin brass	Antique brass	Satin bronze	Oil rubbed Bronze	Satin nickel	Bright chrome	Satin chrome	Bright stainless steel	Satin stainless steel	Aged bronze
ANSI/BHMA number	605	606	609	612	613	619	625	626/626AM	629	630/630AM	643
US number	US3	US4	US5	US10	US10B	US15	US26	US26D	US32	US32D	US11

AM = Antimicrobial.
See pricebook for additional trim and finish availability. 33A, 95 & 99 devices not available in 619 & 630 finishes.

05

06

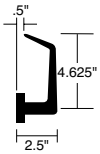

07

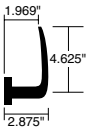

Accent

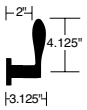

Asti

Latitude

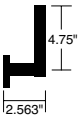

St Annes

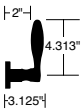

To learn more about suiting of Schlage and Von Duprin products with our decorative or standard levers contact your security consultant or visit **allegion.com/us**.

Escutcheons and roses

Choose from three types of escutcheon and two rose sizes to add tough, durable performance to your lockset.

Escutcheons

L Full face

Specify by adding 'L' after lever design.

Material: Cold-forged brass, bronze or stainless steel

Finishes: 605, 606, 609, 612, 613, 619, 625, 626, 629, 630, 643e

Size: 8" x 1 3/4" x 7/16" (203 mm x 44 mm x 11 mm)

L Concealed

Specify by adding 'C' suffix to function and by adding 'L' after lever design.

Material: Cold-forged brass, bronze or stainless steel

Finishes: 605, 606, 609, 612, 613, 619, 625, 626, 629, 630, 643e

Size: 8" x 1 3/4" x 7/16" (203 mm x 44 mm x 11 mm)

N Escutcheon

Specify by adding 'N' after lever design.

Material: Heavy wrought reinforced brass, bronze or stainless steel

Finishes: 605, 606, 609, 612, 613, 619, 625, 626, 629, 630, 643e

Size: 8" x 2 9/16" x 7/16" (203 mm x 65 mm x 11 mm)

Roses

A Wrought rose

2 1/8" (54 mm) diameter
Available for use on L Series knob and lever designs. Specify by adding 'A' after lever design

Finishes: 605, 606, 609, 612, 613, 619, 625, 626, 629, 630, 643e

B Wrought rose

2 9/16" (65 mm) diameter
Available for use on L Series knob and lever designs. Specify by adding 'B' after lever design.

Finishes: 605, 606, 609, 612, 613, 619, 625, 626, 629, 630, 643e

C Wrought rose

2 5/8" (66 mm) diameter
Available for use on L Series knob and lever designs. Specify by adding 'C' after lever design.

Finishes: 605, 606, 609, 619, 625, 626, 629, 630, 643e

Thumbturns

Choose from three variations of thumbturn locks that help you meet the demands of specialized commercial projects.

Hotel occupancy indicator 09-611

For lock function L9486P, this unit can be used with A or B roses. Requires a 1 3/8" (35 mm) cylinder for 1 3/4" (44 mm) doors. Specify finish when ordering separately.

Optional EZ turn L583-363

Available for rose and escutcheon trim. Disability turn (ADA) option to standard thumbturn. Can be used with thumbturn-function L Series lock except L9463 and L463. Specify lock per L583-363 when ordering.

Coin turn

For lock function L9044 and L9444 with rose trim. Specify 09-509 and finish per L283-124 when ordering.

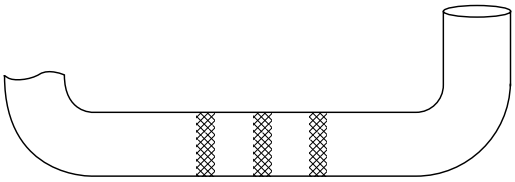

03 Lever shown

Products featuring a knurled surface will be indicated by adding the prefix "8" to the lever number. For example, L9050P 803A/03A.

Tactile warning (knurling)

Schlage L Series commercial levers feature knurling only on the outside lever unless otherwise specified.

This feature is available on the following lever models: 01, 02, 03, 05, 06, 07, 12, 17, 18, 41, 42 and 93.

Lock functions

Lock components

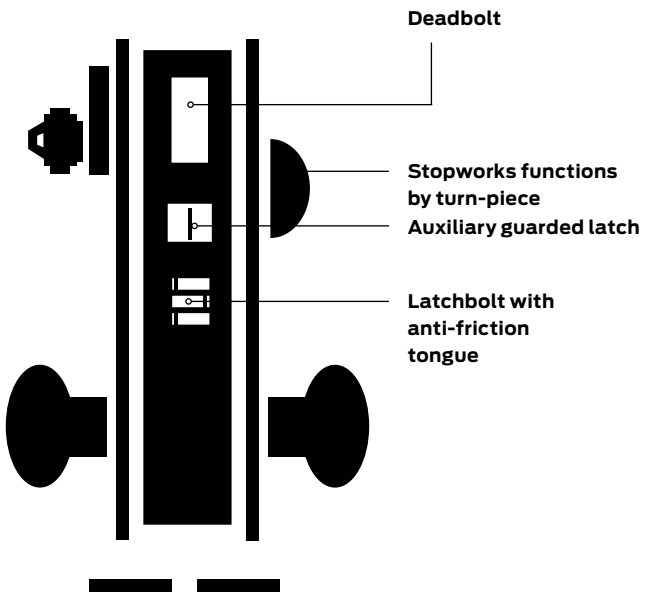

Symbol key

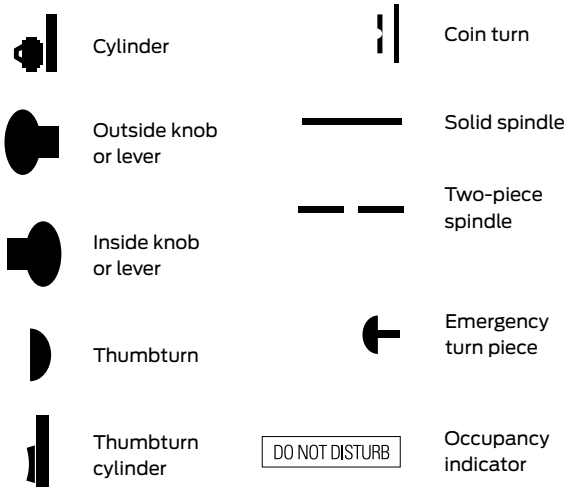

Product identification guide

L/LV 9 4 5 3 P

Lock series
L = standard
LV = vandlgard

0 = dummy trim without lock case
9 = functions with lock case

0 = no deadbolt
1 = dummy trim
4 = with deadbolt

Function

Cylinder suffix

P	= 6-pin full-face mortise cylinder with Schlage logo*
L	= less full-face cylinder
C	= concealed mortise cylinder
W	= less concealed cylinder
R	= full-size interchangeable core with Schlage logo
J	= less full-size interchangeable core
F	= full-size interchangeable core less Schlage logo
T	= full-size construction core
BD	= SFIC less core
BDC	= disposable SFIC
GD	= Everest patented SFIC
HD	= construction SFIC

SFIC = Small Format (Best® style) Interchangeable Core
To order less Schlage logo, specify lock "with K510-612 faceplate."

LV = Vandlgard® function allows exterior lever to rotate freely down while remaining securely locked.

Lock functions
ANSI A156.13, Series 1000

Schlage ANSI

L9010 **F01**

Passage latch

Latchbolt retracted by knob/lever from either side at all times. Inside lever is always free for immediate egress.

L9040 **F22**
LV9040

Bath/bedroom privacy lock

Latchbolt retracted by knob/lever from either side unless outside is locked by inside thumbturn. Turning inside knob/lever or closing door unlocks outside knob/lever. To unlock from outside remove emergency button, insert emergency thumbturn (furnished) in access hole and rotate. Inside lever is always free for immediate egress.

L9044
LV9044

Privacy with coin turn outside

Latchbolt retracted by knob/lever from either side unless outside is locked by inside thumbturn or outside coin turn. Operating inside knob/lever, closing door, rotating inside thumbturn or rotating outside cointurn unlocks outside knob/lever. Specify per L283-056 for Torx® screws. Available with rose trim only. (Previously XL11-868)

L9440
LV9440 **F19**

Privacy with deadbolt

Latchbolt retracted by knob/lever from either side. Deadbolt thrown or retracted by inside thumbturn. Throwing deadbolt locks outside knob/lever. Rotating inside knob/lever simultaneously retracts deadbolt and latchbolt, and unlocks outside knob/lever. To unlock from outside remove emergency button, insert emergency thumbturn in access hole and rotate. Inside liner is always free for immediate egress. (Previously XL11-761.)

Schlage ANSI

L9444
LV9444

Privacy with deadbolt and coin turn outside

Latchbolt retracted by knob/lever from either side. Deadbolt thrown or retracted by inside thumbturn or outside coin turn. Throwing deadbolt locks outside knob/lever. Rotating inside knob/lever simultaneously retracts deadbolt and latchbolt, and unlocks outside knob/lever. Rotating outside coin turn retracts deadbolt and unlocks outside knob/lever. Specify per L283-056 for Torx screws. Available with rose trim only. Inside lever is always free for immediate egress. (Previously XL11-868)

L0170

Half dummy trim

Knob/lever on one side fixed by mounting bar.

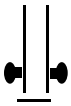

L0172

Full dummy trim

Knob/lever on both sides fixed by mounting bar.

L9175

Half dummy trim with lock case

Fixed knob/lever on one side inoperable. Includes lock case and armored front. Options same as L9176 below.

L9176

Full dummy trim with lock case*

Fixed knob/lever on both sides. Includes lock case and blank armor front. May be ordered with optional XL11-743 armored front with cutout to receive deadbolt.

*In a double-door application where the dummy will be used as the strike order 10-091 Armored Front Strike separately.

Lock functions

Single cylinder non-deadbolt functions

Schlage ANSI

L9050 **F04**
LV9050

Office and inner entry lock

Latchbolt retracted by knob/lever from either side unless outside is made inoperative by key outside or by turning inside thumbturn. When outside is locked, latchbolt is retracted by key outside or by knob/lever inside. Outside knob/lever remains locked until thumbturn is returned to vertical or unlocked by key. Auxiliary latch deadlocks latchbolt when door is closed. Inside liner is always free for immediate egress.

L9056
LV9056

L9050 with automatic unlocking

Latchbolt retracted by knob/lever from either side unless outside is made inoperative by key outside or by rotating inside thumbturn. Outside knob/lever unlocked by key outside, thumbturn or closing door. Rotating inside knob/lever simultaneously retracts latchbolt and unlocks outside knob/lever. Auxiliary latch deadlocks latchbolt when door is closed. Inside lever is always free for immediate egress.

L9070 **F05**
LV9070

Classroom lock

Latchbolt retracted by knob/lever from either side unless outside is locked by key. Unlocked from outside by key. Inside knob/lever always free for immediate exit. Auxiliary latch deadlocks latchbolt when door is closed. Inside lever is always free for immediate egress.

L9076 **F06**
LV9076

Classroom holdback lock

Latchbolt retracted by knob/lever from either side unless outside is locked by key. When locked, latchbolt retracted by key outside or knob/lever inside. Auxiliary latch deadlocks latchbolt when door is closed. Depress inside knob/lever and turn key 360º for holdback feature. Inside lever is always free for immediate egress.

L9080 **F07**
LV9080

Storeroom lock

Latchbolt retracted by key outside or by knob/lever inside. Outside knob/lever is always inoperative. Auxiliary latch deadlocks latchbolt when door is closed. Inside lever is always free for immediate egress.

Schlage ANSI

L9080EL
LV9080EL

Electrically locked (fail safe)

Outside knob/lever continuously locked by 24V AC or DC. Latchbolt retracted by key outside or by knob/lever inside. Switch or power failure allows outside knob/lever to retract latchbolt. Auxiliary latch deadlocks latchbolt when door is closed. Inside knob/lever always free for immediate exit. Inside lever is always free for immediate egress.

L9080EU
LV9080EU

Electrically unlocked (fail secure)

Outside knob/lever unlocked by 24V AC or DC. Latchbolt retracted by key outside or knob/lever inside. Auxiliary latch deadlocks latchbolt when door is closed. Inside lever is always free for immediate egress.

L9080EL-RX / LV9080EL-RX
L9080EU-RX / LV9080EU-RX

Request to exit (RX) electrified lock

Same as L9080EL and L9080EU functions. In addition, a micro-switch positioned inside the lock case monitors the retractor crank, and is actuated when rotation of the inside or outside knob/levers rotates the retractor hub. The switch signals the use of that opening to security systems, allowing a non-disruptive means of immediate egress. Specify per L283-263 with L functions, specify L283-239 with LV functions. Inside lever is always free for immediate egress.

Lock functions

Single cylinder deadbolt functions

Schlage ANSI

L9453 **F20**
LV9453

Entrance lock

Latchbolt retracted by knob/lever from either side unless outside is locked by 20º rotation of thumbturn. Deadbolt thrown or retracted by 90º rotation of thumbturn. When locked, key outside or knob/lever inside retracts deadbolt and latchbolt simultaneously. Outside knob/lever remains locked until thumbturn is restored to vertical position. Throwing deadbolt automatically locks outside knob/lever. Auxiliary latch deadlocks latchbolt when door is closed. Inside lever is always free for immediate egress.

L9456 **F13**
LV9456

Corridor lock

Latchbolt retracted by knob/lever from either side. Deadbolt thrown or retracted by key outside or inside thumbturn. Throwing deadbolt locks outside knob/lever. Turning inside knob/lever simultaneously retracts deadbolt and latchbolt and unlocks outside knob/lever. Inside lever is always free for immediate egress.

L9465

Closet/storeroom lock

Latchbolt retracted by knob/lever from either side. Deadbolt thrown or retracted by key outside.

L9473 **F21**

Dormitory/bedroom lock

Latchbolt retracted by knob/lever from either side. Deadbolt thrown or retracted by key outside or thumbturn inside.

L9480
LV9480

Storeroom lock with deadbolt

Latchbolt retracted by key outside or by lever or knob inside. Outside knob/lever always fixed. Deadbolt thrown or retracted by key outside or thumbturn inside. Turning inside knob/lever simultaneously retracts both deadbolt and latchbolt. Auxiliary latch deadlocks latchbolt when door is closed. Inside lever is always free for immediate egress. (Previously XL11-591)

L9485 x XL11-557

Prison function lock

Latch retracted by key outside or knob inside. Outside knob always free spinning. Deadbolt only thrown or retracted by guard's key. Inside knob becomes fixed when deadbolt is thrown. Prisoner's key only retracts latchbolt. Furnished standard with tamper-resistant Torx screws. Specify per XL11-557.

Schlage ANSI

L9485
LV9485

Faculty/hotel/restroom lock

Latchbolt retracted by key outside or by knob/lever inside. Outside knob/lever always fixed. Deadbolt thrown or retracted by inside thumbturn. When deadbolt is thrown all keys become inoperative except emergency or display keys. Turning inside knob/lever retracts both deadbolt and latchbolt simultaneously. Auxiliary latch deadlocks latchbolt when door is closed. Inside lever is always free for immediate egress.

L9486 **F15**
LV9486

Faculty/hotel/restroom lock "do not disturb" indicator

Latchbolt retracted by key outside or by knob/lever inside. Outside knob/lever always fixed. Deadbolt thrown or retracted by inside thumbturn. When deadbolt is thrown "do not disturb" plate is displayed. All keys become inoperative except emergency or display keys. Turning inside knob/lever retracts both deadbolt and latchbolt simultaneously. Auxiliary latch deadlocks latchbolt when door is closed. Inside lever is always free for immediate egress.

L9486 x L583-375
LV9486 x L583-375

L9486 with "occupied" indicator

Latchbolt retracted by key outside or by knob/lever inside. Outside knob/lever always fixed. Deadbolt thrown or retracted by inside thumbturn. When deadbolt is thrown "Occupied" plate is displayed and all keys become inoperative except emergency keys. Turning inside knob/lever simultaneously retracts both deadbolt and latchbolt. Auxiliary latch deadlocks latchbolt when door is closed. Inside lever is always free for immediate egress. (Previously XL11-580)

L9496

Privacy with "occupied" indicator

Knob/lever retracts latchbolt from either side Deadbolt thrown or retracted by key outside (retraction by key required in the event of an emergency) or inside thumbturn. Throwing deadbolt locks outside knob/lever and displays "Occupied" plate. Rotating inside knob/lever simultaneously retracts both deadbolt and latchbolt, and unlocks outside knob/lever. Inside lever is always free for immediate egress. (Previously XL11-885)

* In a double-door application where the dummy will be used as the strike order 10-091 Armored front strike separately.

Lock functions
Double cylinder non-deadbolt functions

Schlage ANSI

L9060 F09
LV9060

Apartment entrance lock

Latchbolt retracted by knob/lever from either side unless outside is locked by key from inside. When locked, latchbolt retracted by key outside or knob/lever inside. Auxiliary latch deadlocks latchbolt when door is closed. Inside lever is always free for immediate egress.

L9071
LV9071

Classroom security lock

Latchbolt retracted by knob/lever from either side unless outside is locked by key from either side. When locked, latchbolt retracted by key outside or knob/lever inside. Auxiliary latch deadlocks latchbolt when door is locked. Inside lever is always free for immediate egress.

L9077
LV9077

Classroom security holdback lock

Latchbolt retracted by knob/lever from either side unless outside is locked by key from either side. When locked, latchbolt retracted by key outside or knob/lever inside. Auxiliary latch deadlocks latchbolt when door is locked. Depress inside knob/lever and turn key 360º for holdback feature. Inside lever is always free for immediate egress.

L9082 F30
LV9082

Institution lock

Latchbolt retracted by key from either side. Knob/lever on both sides always inoperative. Auxiliary latch deadlocks latchbolt when door is closed.

L9082EL
L9082EU

L9082 electrically locked or electrically unlocked both sides*

EL: Outside and inside knob or lever continually locked electrically. Latchbolt retracted by key either side. Switch or power failure allows outside and inside knob/lever to retract latchbolt. Auxiliary latch deadlocks latchbolt when door is closed. EU: Outside and inside knob/lever unlocked electrically. Latchbolt retracted by key either side. Switch or power failure keeps inside and outside knob/lever locked. Auxiliary latch deadlocks latchbolt when door is closed. (Previously XL11-452)

Lock functions
Double cylinder deadbolt functions

Schlage ANSI

L9457
LV9457

Classroom security lock with deadbolt

Latchbolt retracted by knob/lever from either side. Deadbolt thrown or retracted by key from either side. Throwing deadbolt locks outside knob/lever. Turning inside knob/lever simultaneously retracts deadbolt and latchbolt, and unlocks outside knob/lever. Inside lever is always free for immediate egress.

L9466 F14

Store/utility room lock with deadbolt*

Latchbolt retracted by knob/lever from either side. Deadbolt thrown or retracted by key from either side.

L9482 x XL11-943
LV9482 x XL11-943

Institution lock with deadbolt*

Latchbolt retracted by key from either side. Knob/lever on both sides always inoperative. Deadbolt thrown or retracted by key either side. Auxiliary latch deadlocks latchbolt when door is closed. Specify per XL11-543.

In a double-door application where the dummy will be used as the strike order 10-091 Armored front strike separately.

*Caution: Double cylinder locks on residences and any door in any structure which is used for egress are a life safety hazard in times of emergency and their use is not recommended. Installation should be in accordance with existing codes only.

Specifications

Handing:
L9000 Series lock bodies are field-reversible without disassembly. L400 Series locks are non-handed.

Door thickness:
1 3/4" (44 mm) standard. 1 3/8" (35 mm) to 2 1/2" (64 mm) optional. Over 2 1/2" (64 mm) door ranges vary by function. No escutcheon available for 1 3/4" (44 mm) doors standard. 2" to 2 3/8" (51 mm to 60 mm) optional. Specify door thickness if other than 1 3/4".

Backset:
2 3/4" (70 mm) only.

Armored front:
L9000 Series: 1 1/4" x 8" x 7/32" (32 mm x 203 mm x 6 mm) standard. 1 1/16" x 8" x 1 7/32" (27 mm x 203 mm x 6 mm) optional. L400 Series: 4 7/16" x 3 5/8" x 1" (113 mm x 92 mm x 25 mm)

Case size:
L9000 Series: 4 7/16" x 6 1/16" x 1" (113 mm x 154 mm x 25 mm)
L400 Series: 4 7/16" x 3 5/8" x 1" (113 mm x 92 mm x 25 mm)

Spacing:
Knob or lever to cylinder, 3 7/8" (98mm); knob or lever to thumbturn hub, 2 11/16" (68mm).

Bolts:
1" (25mm) throw stainless steel deadbolt and 3/4" (19mm) throw stainless steel latch with anti-friction tongue.

Exposed trim:
Knobs: #41 and #42 heavy-duty wrought brass, bronze or stainless steel knobs match D Series knobs.

Levers: Forged brass or bronze and cast stainless steel. Designs available to match D Series levers.

93 Lever design: Extruded brass, bronze or stainless steel.

Mediterranean designs: Forged-brass lever and rose.

Escutcheons: L escutcheons are cold-forged brass or bronze and stainless steel. N escutcheons are heavy wrought reinforced brass, bronze and stainless steel.

Trim combinations: Available with knob both sides, lever both sides, or knob and lever with rose or escutcheon both sides.

Strike:
L9000 Series: ANSI curved lip strike 1 1/4" x 4 7/8" (32 mm x 124 mm) x 1 3/16" (30 mm) lip to center with dust box standard. L400 Series: 1 1/8" x 3 5/8" (29 mm x 92 mm) with dust box.

Cylinder & keys:
6-pin Everest C123 keyway cylinder with two patented keys standard.

Keying options:
Interchangeable core and Primus high security cylinders. Master keying, grand master keying and construction keying.

Certifications

ANSI:
L9000: ANSI A156.13 Series 1000, Grade 1 Operational and Security, UL Listed for 3-hour fire door (except L9076 and L9007). With interchangeable core cylinders: Grade 2 Security.

With concealed shell cylinder: A156.13 Grade 1 Operational and Security. ANSI/ASTM F476-76 Grade 40, UL Listed. L400: ANSI A156.5 Grade 1.

California State Reference Code:
(Formerly Title 19, California State Fire Marshal Standard) All levers with returns comply; levers return to within 1/2" of door face.

UL / cUL:
All locks listed for A label single doors, 4' by 10'. Letter F and UL symbol on latch front indicate listing. Electrified functions are UL19X Listed for single-point locking applications. UL437 Listed locking cylinder optional: specify Primus 20-500 Series cylinder.

Door preparation for L9000 Series

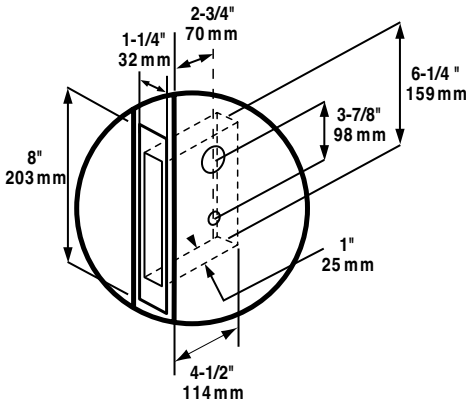

Door preparation for L400 Series

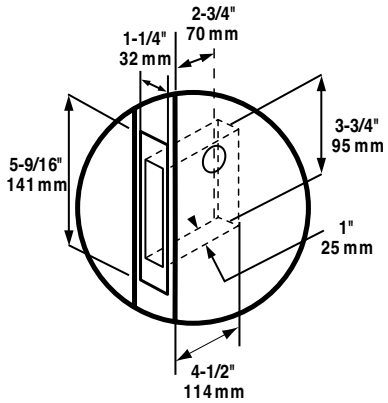

98/99 Rim exit device

The 299 Strike ships standard, optional strikes available

98 and 99 Rim exit devices for all types of single and double doors with mullion, UL listed for panic exit hardware. Devices are ANSI A156.3 – 2008 Grade 1. The 98 device has a smooth mechanism case and the 99 device has a grooved case. The rim device is non-handed except when the following device options are used: SD (special dogging), -2 (double cylinder) or SS (signal switch). See Opposite page for available outside trim and device functions. Covers stock hollow metal doors with 86 or 161 cutouts on single doors (may cover cutouts on pairs – consult template).

Finishes – US3, US3A, US4, US4A, US10, US26, US26D, US26D-AM Antimicrobial, US28, 313, 315 & 643E. US15 and US32D available with 98 Series only.

Hex key dogging comes standard on 98/99 Rim exit devices

Specifications

Device functions	Device ships EO/DT/NL. Field selectable. For TP, K or L remove NL drive screw from device.
Device lengths	3' 2'4' to 3' (711mm to 914 mm) Door size 4' 2'10" to 4' (864 mm to 1219 mm) Door size
Device centerline from finished floor	39 13/16" (1011 mm) 39 11/16" (1008 mm) with mullion
Center case dimensions	8" x 2 3/4" x2 3/8" (203mm x 70mm x 60mm)
Mechanism case dimensions	2 1/4" x 2 1/4" (57mm x 57mm)
Projection	Pushbar neutral – 3 13/16" (97 mm) Pushbar depressed – 3 1/16" (78 mm)
Latch bolt	Deadlocking, 3/4" (19mm) throw
Fasteners & sex bolts (SNB)	Includes screw pack for 1 3/4" (44mm) and 2 1/4" (57mm) thick metal or wood doors. Optional 425 SNB available, see page 9 for quantities.
Electric options	**LX** Latchbolt monitor switch **RX** Pushpad monitor switch **RX2** Double pushpad monitor switch **E** Electric locking & unlocking trim **EL** Electric latch retraction **QEL** Quiet electric latch retraction **SS** Signal switch **CX** Chexit delayed exit **ALK** Alarm exit kit **WP-RX** Waterproof request to exit **CON** Allegion Connect
Mechanical options	**-2** Double cylinder **AX** Accessible device **GBK** Glass bead kit **PN** Pneumatic latch retraction **XP** Extra protection **SNB** Sex bolts **SEC** Security screws
Dogging feature Dogging options	Hex key dogging standard **CD** Cylinder dogging **SD** Special center case dogging **LD** Less dogging **DI** Dogging indicator **CI** Cylinder dogging indicator
Strikes	**299** – Dull black

XP
Extra protection
- 90° latch-to-strike contact
- Force resistance of 2,000+ lbs.

CD
Cylinder dogging
- Replaces hex key dogging
- Requires 1 1/4" mortise cylinder with inverted cam

QEL
Quiet electric latch retraction
- Bolt retraction via switch
- Converts exit door to push-pull operation

RX
Pushpad monitor switch
- Signals use of an opening
- SPDT switch to monitor pushpad

CX
Chexit delayed exit
- Meets NFPA 101 requirements
- Self-contained controls, locking, alarm

AX
Accessible device
- UL certified to meet new 5 lb. maximum operating force requirement
- Exceeds ANSI/BHMA requirements

EL
Electric latch retraction
- Enables remote unlatching
- Alternative to manual dogging

ALK
Alarm exit kit
- Unauthorized opening triggers 85-decibel horn
- Set in armed or disarmed mode by key

PN
Pneumatic latch retraction
- For areas where electrical devices banned
- Special linkage for mechanical or pneumatic dogging

CON
Allegion Connectors
- Common connectors to connect various door hardware all the way to the power supply

Standard trim

	EO	DT	NL	NL-OP
	No outside trim Exit only	 **Dummy trim** Pull when dogged	 **Night latch** Key retracts latchbolt	 **Night latch** Key retracts latchbolt optional pull required
Product description	98EO 99EO	98DT 99DT	98NL 99NL	98NL-OP 99NL-OP
Trim description	—	990DT	990NL-R/V	110NL-MD 110NL-WD
Escutcheon plate size	—	3" x 14 13/16" x 3/32" (76x360x2mm)	3" x 14 13/16" x 3/32" (76x360x2mm)	—
Pull center to center	—	5 1/2" (140mm)	5 1/2" (140mm)	—
Projection	—	2" (51mm)	2" (51mm)	—
ANSI function	01	02	03	03
Cylinder type	—	—	Rim	Rim
Handing	—	—	—	—
Optional trim	x990EO x996EO	x996K-DT x996L-DT x696DT x697DT	x996K-NL x996L-NL x696NL x697NL	
Optional #425 SNB quantity for device	6	2	2	6

	L	L-NL	L-BE	L-DT
	 Lever Key locks & unlocks	 **Lever – night latch** Key retracts latchbolt	 **Lever – blank escutcheon** Always operable (no cylinder)	 **Lever dummy trim** pull when dogged
Product description	98L 99L	98L-NL 99L-NL	98L-BE 99L-BE	98L-DT 99L-DT
Trim description	996L-R/V*	996L-NL-R/V	996L-BE-R/V*	996L-DT
Escutcheon plate size	2 3/4" x 10 3/4" x 27/32" (70x273x21mm)	2 3/4" x 10 3/4" x 27/32" (70x273x21mm)	2 3/4" x 10 3/4" x 27/32" (70x273x21mm)	2 3/4" x 10 3/4" x 27/32" (70x273x21mm)
Pull center to center	—	—	—	—
Projection	2 7/8" (73mm)	2 7/8" (73mm)	2 7/8" (73mm)	2 7/8" (73mm)
ANSI function	08	03	14	02
Cylinder type	Rim	Rim	—	—
Handing	Handed/Reversible	Handed/Reversible	Handed/Reversible	Handed/Reversible
Optional #425 SNB quantity for device	2	2	2	2

* Electrified lever operation available

Notes

98-F/99-F Rim exit device

The 299F Strike ships standard, optional strikes available

499F Strike with 9854/9954 mullion

98-F and 99-F Rim fire exit devices for all types of single doors up to 4' x 10' (1219mm x 3048mm) or 8' x 10' (2438mm x 3048mm) double doors with 9954 or 9854 mullion, UL listed for fire exit hardware. See page 76 for detailed information on UL listed fire exit hardware label and door opening size information. Devices are ANSI A156.3 – 2008 Grade 1. The 98-F device has a smooth mechanism case and the 99-F device has a grooved case. The rim device is non-handed except when the following device options are used: -2 (double cylinder) or SS (signal switch). See opposite page for available outside trim and device functions.

Finishes – US3, US3A, US4, US4A, US10, US26, US26D, US26D-AM Antimicrobial, US28, 313, 315 & 643E. US15 and US32D available with 98 Series only.

Specifications

Device functions	Device ships EO/DT/NL. Field selectable. For TP, K or L remove NL drive screw from device.
Device lengths	3' 2'4' to 3' (711mm to 914 mm) Door size 4' 2'10" to 4' (864 mm to 1219 mm) Door size
Device centerline from finished floor	39 13/16" (1011 mm) 39 11/16" (1008 mm) with mullion
Center case dimensions	8" x 2 3/4" x2 3/8" (203mm x 70mm x 60mm)
Mechanism case dimensions	2 1/4" x 2 1/4" (57mm x 57mm)
Projection	Pushbar neutral – 3 13/16" (97 mm) Pushbar depressed – 3 1/16" (78 mm)
Latch bolt	Deadlocking, 3/4" (19mm) throw
Fasteners & sex bolts (SNB)	Includes screw pack for 1 3/4" (44mm) and 2 1/4" (57mm) thick metal or wood doors. Optional 425 SNB available for metal doors. 425 & 825 SNB required on wood doors without SLM blocking. See page 11 for quantities.
Electric options	**LX** Latchbolt monitor switch **RX** Pushpad monitor switch **RX2** Double pushpad monitor switch **E** Electric locking & unlocking trim **EL** Electric latch retraction **QEL** Quiet electric latch retraction **SS** Signal switch **CX** Chexit delayed exit **ALK** Alarm exit kit **WP-RX** Waterproof request to exit **CON** Allegion Connect
Mechanical options	**-2** Double cylinder **AX** Accessible device **GBK** Glass bead kit **PN** Pneumatic latch retraction **XP** Extra protection **SNB** Sex bolts **SEC** Security screws **SLM** Special Laminate Material Blocking
Dogging option	No mechanical dogging. EL and QEL option available
Strikes	**299F** – Dull black, 499F with mullions

XP
Extra protection
- 90° latch-to-strike contact
- Force resistance of 2,000+ lbs.

RX
Pushpad monitor switch
- Signals use of an opening
- SPDT switch to monitor pushpad

EL
Electric latch retraction
- Enables remote unlatching
- Alternative to manual dogging

ALK
Alarm exit kit
- Unauthorized opening triggers 85-decibel horn
- Set in armed or disarmed mode by key

QEL
Quiet electric latch retraction
- Bolt retraction via switch
- Converts exit door to push-pull operation

CX
Chexit delayed exit
- Meets NFPA 101 requirements
- Self-contained controls, locking, alarm

AX
Accessible device
- UL certified to meet new 5 lb. maximum operating force requirement
- Exceeds ANSI/BHMA requirements

SG
Safety glow
- Shows exit door location in darkness or smoke
- Developed to meet MEA standards

PN
Pneumatic latch retraction
- For areas where electrical devices banned
- Special linkage for mechanical or pneumatic dogging

CON
Allegion Connectors
- Common connectors to connect various door hardware all the way to the power supply

Standard trim

	EO	DT	NL	NL-OP
	No outside trim Exit only	 **Dummy trim** Pull when dogged (not recommended for fire device)	 **Night latch** Key retracts latchbolt	 **Night latch** Key retracts latchbolt optional pull required
Product description	98EO-F 99EO-F	98DT-F 99DT-F	98NL-F 99NL-F	98NL-OP-F 99NL-OP-F
Trim description	—	990DT	990NL-R/V	110NL-MD 110NL-WD
Escutcheon plate size	—	3" x 14 13/16" x 3/32" (76x360x2mm)	3" x 14 13/16" x 3/32" (76x360x2mm)	—
Pull center to center	—	5 1/2" (140mm)	5 1/2" (140mm)	—
Projection	—	2" (51mm)	2" (51mm)	—
ANSI function	01	02	03	03
Cylinder type	—	—	Rim	Rim
Handing	—	—	—	—
Optional trim	x990EO x996EO	x996K-DT x996L-DT x696DT x697DT	x996K-NL x996L-NL x696NL x697NL	
#425 SNB optional - HMD req. WD w/o SLM pkg.	2	2	2	2
#825 SNB req. WD w/o SLM pkg.	2 (if using trim)	2	2	2
#425 SNB req. w/ 499F	2	2	2	2

	L	L-NL	L-BE	L-DT
	 Lever Key locks & unlocks	 **Lever – night latch** Key retracts latchbolt	 **Lever – blank escutcheon** Always operable (no cylinder)	 **Lever dummy trim** pull when dogged (not recommended for fire device)
Product description	98L-F 99L-F	98L-NL-F 99L-NL-F	98L-BE-F 99L-BE-F	98L-DT-F 99L-DT-F
Trim description	996L-R/V*	996L-NL-R/V	996L-BE-R/V*	996L-DT
Escutcheon plate size	2 3/4" x 10 3/4" x 27/32" (70x273x21mm)	2 3/4" x 10 3/4" x 27/32" (70x273x21mm)	2 3/4" x 10 3/4" x 27/32" (70x273x21mm)	2 3/4" x 10 3/4" x 27/32" (70x273x21mm)
Pull center to center	—	—	—	—
Projection	2 7/8" (73mm)	2 7/8" (73mm)	2 7/8" (73mm)	2 7/8" (73mm)
ANSI function	08	03	14	02
Cylinder type	Rim	Rim	—	—
Handing	Handed/Reversible	Handed/Reversible	Handed/Reversible	Handed/Reversible
#425 SNB optional - HMD req. WD w/o SLM pkg.	2	2	2	2
#825 SNB req. WD w/o SLM pkg.	2 (if using trim)	2	2	2
#425 SNB req. w/ 499F	2	2	2	2

* Electrified lever operation available

98/99 Dogging options

CDSI/HDSI dogging indicators

Indicator provides an at-a-glance verification of the status of the door from inside of the room. Visible "LOCKED" and "UNLOCKED" indicators show whether the device is undogged or dogged. This feature can be used with Hex key (HDSI) or Cylinder dogging (CDSI) options on various device types – rim, mortise and vertical systems.

- Modular conversion kits allow you to quickly and easily upgrade your existing devices
- Available for 98/99 & 33A/35A Series panic devices

To order, specify:

- Use prefix, CDSI or HDSI, example CDSI99L

CD Cylinder dogging

Cylinder dogging is available on all 98/99™ Panic exit devices to replace the standard hex key dogging. Unit requires a standard 1¹/₄" (32mm) mortise cylinder with an inverted straight cam (Schlage Cam B502-191 reference).

To order, specify:

- Use prefix, CD, example CD99L

CDK Cylinder dogging kit*

For field conversion, a cylinder dogging conversion kit is available.

To order, specify: 99CDK or 98CDK, specify finish.

*Cannot be added to fire exit hardware.

HDK Hex key dogging kit*

For field conversion, a hex key dogging conversion kit is available.

To order, specify: 99HDK or 98HDK, specify finish.

*Cannot be added to fire exit hardware.

LD Less dogging

Less dogging is available in all 98/99™ Panic exit devices to remove the dogging option.

To order, specify: Use prefix LD, example LD99L

Dog keys

Dog key (old style)

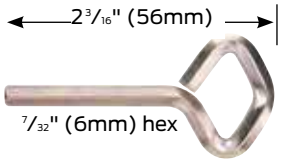

Dog key (standard)

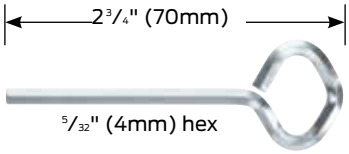

-2SI Double cylinder with security indicator

The Von Duprin Classroom Security Indicator provides an at-a-glance verification of the locked/unlocked status of the door from inside of the room. This option can be ordered as a new product or as a retrofit conversion kit to an existing 98/99 device. Indicator in Unlocked state presents a ¹/₂" x ¹/₂" metal flag (white background with black icon) at top of device head. Indicator in Locked state has no flag present.

To order, specify:

1. Suffix-2SI with device/trim number, example 99L-2SI.
2. Handing required, LHR or RHR.

SD Special center case dogging

Special cylinder dogging in the center case is available for Chexit, EL, QEL, ALK panic devices to allow for mechanical push/pull operation. With this option, the latchbolt is held retracted and pushbar is still operable. Specify handing—RHR or LHR.

SD requires 1³/₄" (32mm) mortise cylinder with an inverted straight cam. (Schlage cam reference B502-191.)

Note: Available on Rim and Vertical Rod Panic Exit Devices only.

To order, specify:

- Use prefix SD, example SD99L and Handing
- Not for 98/9975 Devices

Double cylinder

Double cylinder features an inside key cylinder which locks or unlocks the outside trim and an outside key cylinder which retracts the latch bolt only (Night latch function). Available on rim or mortise lock device.

Rim requires two rim type cylinders. Mortise device requires 1 rim cylinder and 1 mortise cylinder 1¹/₄" with a straight cam. (Schlage cam reference B502-191.)

Available functions are thumbpiece, knob or lever.

To order, specify:

1. Suffix-2 with device/trim number, example 99TP-2.
2. Handing required, LHR or RHR.

98/99 Mechanical options

AX Accessible device

The AX device is a UL certified exit device designed to meet the progressive requirements of the California Building Code for accessible openings. This device meets the 5 lbs of operating force requirement called for in chapter 11B-309.4. The AX device also exceeds ANSI/BHMA requirements. Available devices include: AX98/99, AX98/99-F, AX98/9949LBL, AX98/9949-F LBL, AX98/9949-F LBLAFL. Additionally, all AX devices will be shipped with a new UL label clearly stating "Meets California building Code (2013) Sec. 11B-309.4" and an "AX" identifier label on device center case. See images below for reference.

XP Extra performance

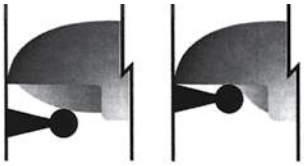

For increased security the XP98/99 Rim exit device has a static load force resistance of more than 2,000 pounds, twice that of standard rim exit devices. The two-piece latch bolt forms a 90° latch-to-strike contact. The "smart" latch changes shape when subjected to external forces. This design enables the exit door to withstand an external attack and remain secure. Additionally, the patented latch bolt design provides a greater, longer-lasting latch bolt to strike contact which is not easily affected by the twisting motion of a weakened frame, resulting in an opening that will remain strong.

With a door loaded to 250 pounds, XP98/99 requires less than 40 pounds of pressure to open, 25% less than the safety code requires.

XP98/99 is available for panic or fire exit hardware applications. Dimensions, finishes and trim options are equal to the standard 98/99 series rim exit device.

Note: The 909 strike is to be used for all applications.
The exception occurs with the use of fire rated double door applications, in this instance the 954 strike is required.

WS Surface vertical rod one-point and three-point exit devices

WS Multi-point exit devices for tornado application devices WS98/9927 (one- point) and WS98/9957 (three-point) surface vertical rod exit devices are designed, tested and certified to comply with the Federal Emergency Management Agency's publication FEMA 361- Design and Construction Guidance for Community Safe Rooms.

UL Listing – panic hardware UL 305; and fire exit hardware UL 10C:
WS98/9927:

3 hour pairs of doors double egress, 90 minutes swinging same direction, 8'0" x 8'0" BHMA Grade 1, ANSI A156.3-2001

WS98/9957:

3 hours single doors, 4'0" x 8'0" BHMA Grade 1, ANSI A156.3-2001

Windstorm ratings:
WS98/9927:

Miami-Dade County/FBC compliance to TAS 201, TAS 202, TAS 203; design load rating +150/-150 PSF (245 MPH wind zone); Enhanced Hurricane Protection (EHPA) ASTM E1996, ANSI/ICC 500 (245 MPH wind zone).

UL-FEMA 361 certified 8'0" x 8'0" pairs, swinging same direction and 4'0" x 8'0" single non-fire rated flush hollow metal. UL-ANSI/ICC 500 certified for F5 tornado applications.

WS98/9957:

UL-FEMA 361 certified 4'0" x 8'0" single flush hollow metal (fire-rated and panic). UL-ANSI/ICC 500 certified for F5 tornado applications.

These devices are listed with Steelcraft Paladin™ PW-Series doors for tornados, and Steelcraft H-Series doors hurricane applications.

To order, specify: WS prefix, example WS9927-F

LBR Less bottom rod, panic and fire rated

LBR option is available, using a spring loaded auxiliary latch bolt installed in the lower door edge. When exposed to heat the auxiliary latch bolt releases, keeping the doors in alignment and closed during a fire. UL listed 3 hours on hollow metal doors double egress, 90 minute swinging same direction, and 20 minutes wood doors (consult wood door manufacturer). Fits door stiles as narrow as $3^{5}/_{8}$".

LBR devices must be ordered in pairs or must be used in conjunction with an approved automatic or constant latching flush bolt.

PL Pullman latch

When PL is specified the standard latches are replaced with pullman style latches. Pullman latches are always extended and are most commonly used in conjunction with electric strikes and LBR-less bottom rod application. Not available with Fire rated devices.

Not recommended where security is of the utmost importance since latches do not deadlock.

98/99 Device options & accessories

Mullions

Removable steel mullions provide single door performance in double door openings with rim devices. Mullions are easily removed by loosening bottom set screw and removing top fitting cover. The top mullion fitting is attached to the frame and is concealed by the fitting cover.

Steel mullions are 2" (51mm) wide and 3" (76mm) deep, with a wall thickness of 1/8" (3mm).

Mullions are shipped with mounting screws and prepared for strikes. Strikes are not included except where indicated.

Steel mullions are available in SP28 and SP313 finishes. Consult factory for other powder coat finish options.

KR – Keyed removable steel mullions make removal faster and easier by a single operation of the mortise cylinder. Once mullion is removed, large equipment or furniture can freely pass through the opening. The unit will self lock when re-installed, without the use of the cylinder key. Uses a 1 1/4" mortise cylinder with a straight cam (Schlage cam reference B502-191). Cylinders are sold separately. Prefix mullion model with "KR".

Removable aluminum mullions are 1 1/16" (27mm) wide on face closest to the door and 2 3/8" (60mm) at the widest point. The depth is 3 1/8" (79mm) with a wall thickness of 1/8" (3mm).

Aluminum mullions are available in US4, US10, US28, 313 and 315 finishes. Consult factory for other powder coat finish options. Aluminum mullion are not available keyed removable.

Stock hollow metal applications for devices mounted to cover ANSI 161 cutouts are higher than the standard mullion strike location. Consult the factory for special strike preparation or order a blank mullion. See below.

Blank mullions are furnished without strike preparation. They are used to mount devices at a strike height different from the standard mullion preparation.

To order, specify:

1. For keyed Removable option on steel mullions, prefix model number with "KR"
2. Model number
3. Height of opening
4. Finish
5. Handing if required
6. Centerline deviation (refer to device template for standard centerline)
7. Strikes, when required, should be ordered with device

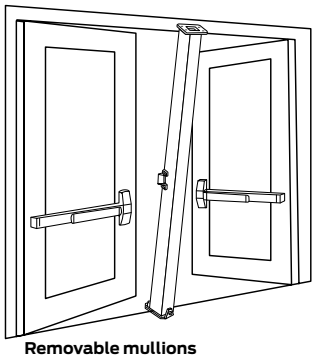

Removable mullions

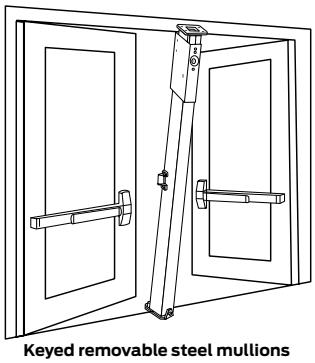

Keyed removable steel mullions

Steel mullions

1654 Prepared for two 1606 strikes. If 1606 strikes are not specified on the order, two per mullion will be added. Additional charges apply.

4954 Prepared for 264 or 299 strikes. For use with all Von Duprin Panic rim devices.

9954 Prepared for and must be used with two 268 strikes (88-F device), or two 499F (22-F, 98-F, 99F devices). UL fire labeled mullion for up to 3 hour opening using Von Duprin fire exit rim devices. This mullion is not easily removed due to special fittings.

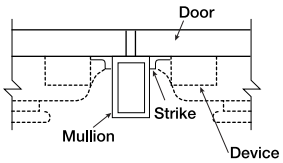

98-F and 99-F devices are rated up to 10'0" (3048 mm).

Note: If 268 or 499F strikes are not specified on the order, two per mullion will be added. Additional charges apply.

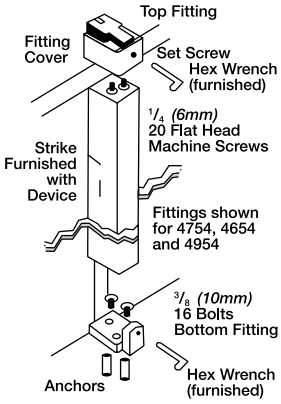

4754 Prepared for two 4263 monitor strikes.

4854 Prepared for one 299 and one 6111 electric strike. Indicate handing for electric strike.

9854 Prepared for one 268 or 499F strike and one 6111 electric strike. Indicate handing for electric strike. UL fire labelled mullion for up to 3 hour openings up to 8' x 8' (2438mm x 2438mm) using Von Duprin fire exit rim devices

4854/9854 – Using one electric strike

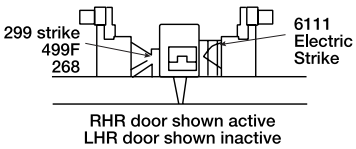

Cabinet lock functions

Conventional cylinder

Cabinet door lock - CL100PB

Rekeyable: Easily rekeyed via patented set-screw cylinder removal mechanism

Certifications: ANSI A156.11, Grade 2

Body: Die cast zinc

Bolt: Brass, 1 5/16" projection

Door thickness: 7/8" to 1 3/8"

Barrel diameter: 1 1/8"

Cylinder: Everest 29 S123 keyway standard, Available in Primus XP, Everest 29, Everest and Classic keyways

Keying: KD, KA or MK

Finishes: 605, 626

Not available without cylinder

Drawer lock - CL200PB

Rekeyable: Easily rekeyed via patented set-screw cylinder removal mechanism

Certifications: ANSI A156.11, Grade 2

Body: Die cast zinc

Bolt: Steel, 3/4" throw

Door thickness: 7/8" to 1 3/8"

Barrel diameter: 1 1/8"

Cylinder: Everest 29 S123 keyway standard, Available in Primus XP, Everest 29, Everest and Classic keyways

Stock keying: KD, KA or MK

Finishes: 605, 626

Not available without cylinder

Finishes

Bright brass 605

Satin chrome 626

Full size interchangeable core (FSIC)

Cabinet door lock - CL777R

Rekeyable: Easily rekeyed via patented set-screw cylinder mechanism

Certifications: ANSI A156.11, Grade 1

Body: Die cast zinc

Bolt: Brass, 1 5/16" projection

Barrel length: 1 7/16"

Barrel diameter: 1 1/8"

Cylinder: Everest 29 S123 keyway standard, Available in Primus XP, Everest 29, Everest and Classic keyways

Keying: KA, KD, MK or construction core

Finishes: 605, 626

Not available without cylinder

Drawer lock - CL888R

Rekeyable: Easily rekeyed via patented set-screw c ylinder mechanism

Certifications: ANSI 156.11, Grade 2

Body: Die cast zinc

Bolt: Brass, 7/8" projection

Door thickness: 7/8" to 1 3/8"

Barrel diameter: 1 1/8"

Cylinder: Everest 29 S123 keyway standard, Available in Primus XP, Everest 29, Everest and Classic keyways

Keying: KA, KD, MK or construction core

Finishes: 605, 626

Not available without cylinder

Cam lock - CL920R

Body: Die cast zinc

Body diameter: 1 1/8"

Mounting cutout: 1 5/32"

Max material thickness: 1 1/8"

Min material thickness: 0.08"

Across flats: 7/8"

Cylinder: Everest 29 S123 keyway standard, Available in Primus XP, Everest 29, Everest and Classic keyways

Keying: KA, KD, MK or construction core

Finishes: 605, 626

Not available without cylinder

Ratchet lock – CL929R

Body: Die cast zinc

Body diameter: 1 1/8"

Max door material thickness: 1/4"

Cylinder: Everest 29 S123 keyway standard, Available in Primus XP, Everest 29, Everest and Classic keyways

Keying: KA, KD, MK or construction core

Finishes: 626

Not available without cylinder

Brass padlocks

- Meet or exceed ASTM standards for standard steel shackle, shackle cutting and corrosion resistance
- Solid brass body resists corrosion for all-weather performance
- Molybdenum hardened steel shackle offers greater cut resistance
- Double deadbolt locking mechanism provides extra security
- Patented interchangeable shackle design allows for easy disassembly
- Standard cylinder features include:
  - Schlage conventional key-in-knob (KNK) cylinder
  - 6-pin solid brass cylinder (pinned 5) offers increased pick resistance
  - Two nickel silver cut Schlage keys

43 Series 23 Series

	Body size			Shackle dimension			Shackle dimension (metric)					
Part #	Width	Height	Depth	A	B	C	A	B	C	Cylinder type	Case pack	Master pack
Keyed different												
KS23D2300	1 25/32"	2 3/16"	7/8"	5/16"	1 1/2"	3/4"	8 mm	38 mm	19 mm	KNK	6	24
KS23F2300	1 25/32"	2 3/16"	7/8"	5/16"	2"	3/4"	8 mm	51 mm	19 mm	KNK	6	24
KS43D2300	1 15/16"	2 3/16"	7/8"	3/8"	1 1/2"	3/4"	9.5 mm	38 mm	19 mm	KNK	6	24
KS43F2300	1 15/16"	2 3/16"	7/8"	3/8"	2"	3/4"	9.5 mm	51 mm	19 mm	KNK	6	24
Less cylinder - KNK												
KS23D2200	1 25/32"	2 3/16"	7/8"	1/4"	2"	3/4"	6.4 mm	51 mm	19 mm	KNK	6	24
KS23F2200	1 25/32"	2 3/16"	7/8"	5/16"	3/4"	3/4"	8 mm	19 mm	19 mm	KNK	6	24
KS43D2200	1 25/32"	2 3/16"	7/8"	1/4"	2"	3/4"	6.4 mm	51 mm	19 mm	KNK	6	24
KS43F2200	1 25/32"	2 3/16"	7/8"	5/16"	3/4"	3/4"	8 mm	19 mm	19 mm	KNK	6	24
Less cylinder - FSIC[1]												
KS43D3200	1 15/16"	2 3/16"	7/8"	3/8"	1 1/2"	3/4"	9.5 mm	38 mm	19 mm	KNK	6	24
KS43F3200	1 15/16"	2 3/16"	7/8"	3/8"	2"	3/4"	9.5 mm	51 mm	19 mm	KNK	6	24

Note: 1) Less cylinder padlocks ship without a cylinder. Driver and all other internal padlock parts are included.

COR Series Bar Coodinators

Meets ANSI/BHMA A156.3, Type 21A.
UL Listed for installation on labeled frame.

- The COR Series Coordinators are designed for use on pairs of doors when one door needs to close before the other.
- All COR units function easily. The active door lever, located nearest to the active stop, holds the active door open until the trigger mechanism is released by the closing of the inactive leaf.
- All COR units may not function correctly with swingclear hinges.
- All COR units are equipped with an adjustable override feature which allows the active door to close under extreme pressure.
- All COR units are compatible with Flush Bolts.
- The COR Series is available in five sizes for variable door opening widths.
- The COR Series does not cover the entire length of the stop, so a FL filler bar can be provided to maintain architecturally clean lines.
- COR Series Coordinator Channels and FL fillers are made of aluminum.
- Optional Filler Bars: FL20 - 20", FL32 - 32" and FL44 - 44", available to maintain clean line.
- Optional Mounting Brackets available: MB1, MB2, MB1F, MB2F, MB3F, MB1V, MB2V, and MB3V for other stop applied hardware.

For Openings Where Doors Are Same Size

Coordinator Number	Length of Channel	For Opening Widths	Common Applications
COR32	32"	34" - 52"	Pair of 2'0" Doors
COR42	42"	52" - 72"	Pair of 2'6" Doors
COR52	52"	62" - 92"	Pair of 3'0" Doors
COR60	60"	70" - 108"	Pair of 3'6" Doors
COR72	72"	84" - 132"	Pair of 4'0" Doors

For Openings Where Doors Are Unequal Size

The coordinator length should equal the active door width plus approximately 1/2 the inactive door width. The coordinator must be 6" longer than the active door width and shorter than the overall frame opening between stops.

Finishes

Ives Finish	US28	US26D	315AN
BHMA	628	713	711

FL Series Filler Bars

- The FL Filler Bars are available in three sizes for variable frame openings.
- FL Filler Bars are made of aluminum
- FL Filler Bars are field sized to frame opening.

Filler Bar Number	Length	Dimensions
FL20	20"	1-5/8" W x 5/8" D x 20" L
FL32	32"	1-5/8" W x 5/8" D x 32" L
FL44	44"	1-5/8" W x 5/8" D x 44" L

Finishes

Ives Finish	US28	US26D	315AN
BHMA	628	713	711

MB1and MB2

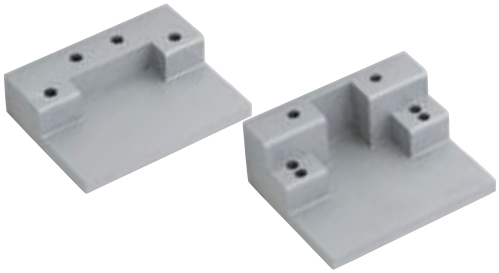

Mounting Brackets

- Allows stop mounted hardware to be properly installed without damaging the COR coordinator, such as a parallel arm closer or a non-fire-rated surface vertical rod strike.
- Stop mounted hardware will need to be lowered to compensate for the height of the coordinator and mounting bracket.
- MB mounting brackets are made of aluminum

Product	Jamb Depth	Stop Width	Dimensions
MB1	4-3/4" Min.	Over 2-1/2"	4" W x 3" D x 15/16" T
MB2	4-3/4" Min.	Up to 2-1/2"	4" W x 3-1/4" D x 1-5/8" T

Finishes

Ives Finish	USP	SP28	SPBLK
BHMA	600	689	622

MB1F, MB2F and MB3F
MB1V, MB2V and MB3V

MB1V

MB2V

MB3V

Fire Rated Mounting Brackets

- Allows for fire-rated stop mounted hardware to be properly installed without damaging the COR Coordinators, such as fire-rated surface vertical rod exit device strikes.
- Latch will need to be lowered to compensate for the height of the coordinator and mounting bracket.
- MB-V are designed for Von Duprin 8827-F soffit latch.
- Mounting brackets are made of steel.

Product	Jamb Depth	Stop Width	Dimensions
MB1F	5"	1-1/2" - 2-1/4"	4" W x 3" D x 1-5/8" T
MB1V	5"	1-1/2" - 2-1/4"	4" W x 3" D x 1-5/8" T
MB2F	5-7/8"	2-3/8" - 3-1/4"	4"W x 4" D x 1-5/8"T
MB2V	5-7/8"	2-3/8" - 3-1/4"	4"W x 4" D x 1-5/8"T
MB3F	6-7/8"	Over 3-3/8"	4"W x 3-1/2" D x 1"T
MB3V	6-7/8"	Over 3-3/8"	4"W x 3-1/2" D x 1"T

Finishes

Ives Finish	USP	SP28	SPBLK
BHMA	600	689	622

Meets ANSI A156.3 Type 25.
UL Listed 3 Hour Fire Doors 8'0" x 10'0"

FB31P Top and Bottom Bolts (Pair)

- Fully Automatic—inactive door is latched, bolts are extended when active door closes, door is unlatched, bolts retract when active door is opened.
- Low Actuation Forces—Top Bolt Has No Spring Tension.
- Fits standard ANSI A115.4 Door Frame Preparations.
- Non-handed.
- Bolt throw is 3/4" with a 7/8" vertical adjustment.
- Bolt backset is 3/4"
- Standard Rod Length is 12", which is measured from the center of the flush bolt body to the bolt tip. Optional rod lengths available for top bolt only on non-fire rated openings—18", 24", 36" and 48.

DP1 or DP2 optional dust proof strike available, see page C11.

FB31T Top Bolt Only
FB31B Bottom Bolt Only

Meets ANSI A156.3 Type 25.
UL Listed 3 Hour Fire Doors 8'0" x 8'0"

FB32 Top Bolt with Auxiliary Fire Latch

- FB32 Model with Auxiliary Fire Latch eliminates the bottom bolt and is UL Listed for Fire Doors.

FB33 Top Bolt with Auxiliary Fire Latch and Retrofit Plate

- FB33 Model with Auxiliary Fire Latch eliminates the bottom bolt and includes a retrofit plate to cover existing bottom bolt prep. UL Listed for Fire Doors.

Dimensions

Body Size: 1" Wide x 6-3/4" Long x 2" Deep

Guide Size: 1" Wide x 1-27/32" Long x 27/32" High x 3/32" Thick

Strike Size: 15/16" Wide x 2-1/4" Long x 1/16" Thick

Rub Plate Size: 1-1/4" Wide x 1-11/16" Long x 3/64" Thick

Auxiliary Fire Latch Size: 1" Wide x 1-3/4" Long x 3-1/4" Deep

Retrofit Plate Size: 1" Wide x 6-3/4" Long x 3/32" Thick

Finishes

Ives Number	US3	US4	US10	US10B	US32	US32D
BHMA	605	606	612	613	629	630

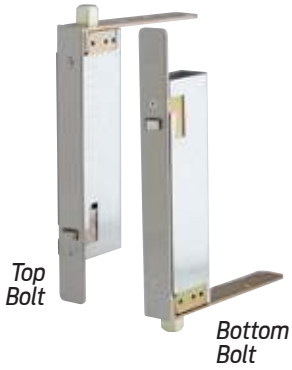

Meets ANSI A156.3 Type 25.
UL Listed 90 Minute Fire Doors 8'0" x 8'0"

FB41P Top and Bottom Bolts (Pair)

- Fully Automatic—inactive door is latched, bolts are extended when active door closes, door is unlatched bolts retract when active door is opened.
- Low Actuation Forces—Top Bolt Has No Spring Tension.
- Non-handed.
- Bolt throw is 3/4" with a 7/8" vertical adjustment.
- Bolt backset is 3/4"

DP1 or DP2 optional dust proof strike available, see page C11.

FB41T Top Bolt Only
FB41B Bottom Bolt Only

FB42 Top Bolt with Auxiliary Fire Latch

- FB42 Model with Auxiliary Fire Latch eliminates the bottom bolt and is UL Listed for Fire Doors.

Meets ANSI A156.3 Type 25.
UL Listed 20 Minute Fire Doors 8'0" x 8'0"

Dimensions

Body Size: 1" Wide x 8-1/2" Long x 2" Deep

Guide Size: 1" Wide x 6" Long x 1/8" Thick

Strike Size: 15/16" Wide x 2-1/4" Long x 1/16" Thick

Rub Plate Size: 1-1/4" Wide x 1-11/16" Long x 3/64" Thick

Auxiliary Fire Latch Size: 1" Wide x 1-3/4" Long x 3-1/4" Deep

Finishes

Ives Number	US3	US4	US10	US10B	US32	US32D
BHMA	605	606	612	613	629	630

Meets ANSI A156.3 Type 27.
UL Listed 3 Hour Fire Doors 8'0" x 10'0"

FB51P Top and Bottom Bolts (Pair)

- Constant Latching—inactive door remains latched until the active door is opened, releasing the automatic bottom bolt and then the top bolt can be manually released. Inactive door will relatch automatically when closed.
- Low Actuation Forces.
- Fits standard ANSI A115.4 Door and Frame Preparations.
- Non-handed.
- 3/4" bolt throw with a 7/8" vertical adjustment.
- 3/4" backset
- Standard Rod Length is 12", which is measured from the center of the flush bolt body to the bolt tip. Optional rod lengths available for top bolt only on non-fire rated openings—18", 24", 36" and 48".

DP1 or DP2 optional dust proof strike available, see page C11.

FB51T Top Bolt Only

Meets ANSI A156.3 Type 27.
UL Listed 3 Hour Fire Doors 8'0" x 10'0"

FB52 Top Bolt with Auxiliary Fire Latch

- FB52 Model with Auxiliary Fire Latch eliminates the bottom bolt and is UL Listed for Fire Doors.

FB53 Top Bolt with Auxiliary Fire Latch & Retrofit Plate

- FB53 Model with Auxiliary Fire Latch eliminates the bottom bolt and includes a retrofit plate to cover existing bottom bolt prep. UL Listed for Fire Doors.

Dimensions

Body Size: 1" Wide x 6-3/4" Long x 2" Deep

Guide Size: 1" Wide x 1-27/32" Long x 11/16" High x 3/32" Thick

Strike Size: 15/16" Wide x 2-1/4" Long x 1/16" Thick

Rub Plate Size: 1-1/4" Wide x 1-11/16" Long x 3/64" Thick

Auxiliary Fire Latch Size: 1" Wide x 1-3/4" Long x 3-1/4" Deep

Retrofit Plate Size: 1" Wide x 6-3/4" Long x 3/32" Thick

Finishes

Ives Number	US3	US4	US10	US10B	US32	US32D
BHMA	605	606	612	613	629	630

Meets ANSI A156.3 Type 27.
UL Listed 90 Minute Fire Doors 8'0" x 8'0"

FB61P Top and Bottom Bolts (Pair)

- Constant Latching—inactive door remains latched until the active door is opened, releasing the automatic bottom bolt and then the top bolt can be manually released. Inactive door will relatch automatically when door closes.
- Low Actuation Forces.
- Non-handed.
- Bolt throw is 3/4" with a 7/8" vertical adjustment.
- Bolt backset is 3/4"

DP1 or DP2 optional dust proof strike available, see page C11.

FB61T Top Bolt Only

FB62 Top Bolt with Auxiliary Fire Latch

- FB62 Model with Auxiliary Fire Latch eliminates the bottom bolt and is UL Listed for Fire Doors..

Meets ANSI A156.3 Type 27.
UL Listed 20 Minute Fire Doors 8'0" x 8'0"

Dimensions

Body Size: 1" Wide x 8-1/2" Long x 2" Deep

Guide Size: 1" Wide x 6" Long x 1/8" Thick

Strike Size: 15/16" Wide x 2-1/4" Long x 1/16" Thick

Rub Plate Size: 1-1/4" Wide x 1-11/16" Long x 3/64" Thick

Auxiliary Fire Latch Size: 1" Wide x 1-3/4" Long x 3-1/4" Deep

Finishes

Ives Number	US3	US4	US10	US10B	US32	US32D
BHMA	605	606	612	613	629	630

4040XP SERIES

FEATURES

CLOSER MOUNTS
***HINGE (PULL) SIDE**
TOP JAMB (PUSH SIDE)
PARALLEL ARM (PUSH SIDE)

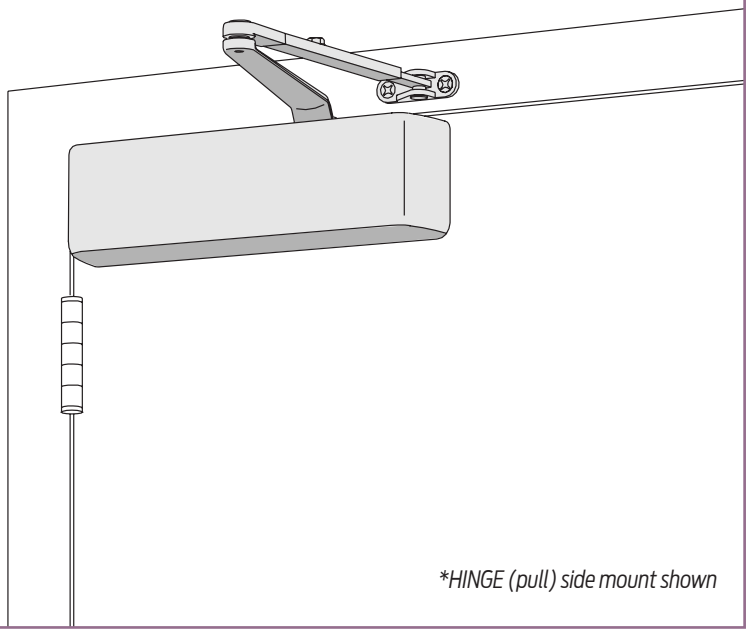

**HINGE (pull) side mount shown*

The 4040XP is LCN's most durable and flexible heavy duty closer designed for institutional and other demanding high traffic applications.

- Cast Iron
- Forged Steel Arm
- Double Heat Treated Steel Pinion
- All Weather Fluid
- Non-Handed
- LCN Patented Green Dial
- Peel-n-Stick Templates for Fast and Accurate Installation
- UL & cUL Listed
- 3/4″ Journal Diameter Pinion
- Full Compliment Bearing

- Standard 4040XP Series closer shipped with regular arm, standard plastic cover, and self reaming and tapping screws.
- Non-sized cylinder is adjustable for interior doors to 5'0" and exterior doors to 4'0".
- Closer mounts hinge side, top jamb, and parallel arm on either right or left swinging doors.
- Closers to meet ADA requirements.
- Standard or optional custom powder coat finish.
- Optional plated finish on cover, arm, and fasteners.
- Optional SRI primer for installations in corrosive conditions. (Available with powder coat finishes only.)
- UL and cUL listed for self-closing doors without hold-open.
- Tested and certified under ANSI Standard A156.4, grade one.

The 4040XP Series includes the
LCN® "Green Dial"
Spring Force Indicator

MOUNTING					FINISH		COVER		CYLINDER				**ARM FUNCTION							
HINGE (PULL) SIDE	TOP JAMB (PULL)	TOP JAMB (PUSH)	PARALLEL ARM	STOP FACE	POWDER COAT	PLATED	PLASTIC	METAL	NON-HANDED	NON-SIZED	ACCESSIBILITY	DELAYED ACTION****	AVB***	REGULAR (DOUBLE)	STANDARD (SINGLE)	HOLD-OPEN	FUSIBLE LINK	EDA/HEDA	CUSH/HCUSH	SCUSH/SHCUSH	DOUBLE EGRESS
●	○	●	●	○	●	●	●	●	●	●	♿	●	○	120°	○	120°	○	180°	110°	110°	○

● AVAILABLE
○ NOT AVAILABLE

♿ *Closer available with less than 5.0 lbs. opening force on 36″ door.*
** *Maximum opening/hold-open point with standard template.*
*** *Advanced Variable Backcheck.*
**** *Delayed Action Closer incorporates standard 4041 Delay Cylinder.*

PHONE 877-671-7011
FAX 800-248-1460
www.allegion.com/us

2/14

4040XP SERIES

MOUNTING DETAILS

HINGE (PULL) SIDE MOUNTING

MAXIMUM OPENING

Templating allows up to 120º.

Hold-open points 90º up to 120º with hold-open arm.

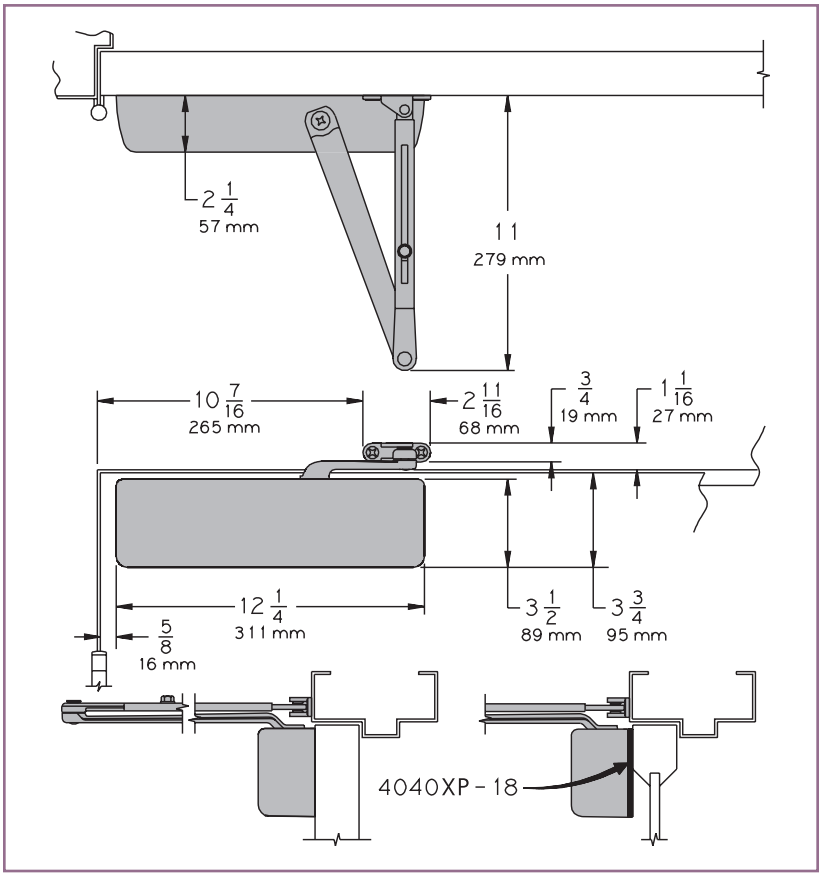

- **Butt Hinges** should not exceed 5" (127 mm) in width.
- **Auxiliary Stop** is recommended at hold-open point or where a door cannot swing beyond 120º.
- **Reveal** should not exceed 3/4" (19 mm) for regular arm or hold-open arm.
- **Top Rail** less than 3-3/4" (95 mm) requires PLATE, 4040XP-18. Plate requires 2" (51 mm) minimum.
- **Clearance** of 2-3/8" (60 mm) behind door required for 90º installation.
- ***Delayed Action** Incorporates standard 4041 cylinder, without XP cylinder. Delays closing from 120º to 70º. Delay time adjustable up to approximately 1 minute.

Options

- 4041 Delayed action cylinder*.
- Hold-open arm.
- Metal cover.

Special Templates

Customized installation templates or products may be available to solve unusual applications. Contact LCN Product Support for assistance.

PHONE 877-671-7011
FAX 800-248-1460
www.allegion.com/us
2/14

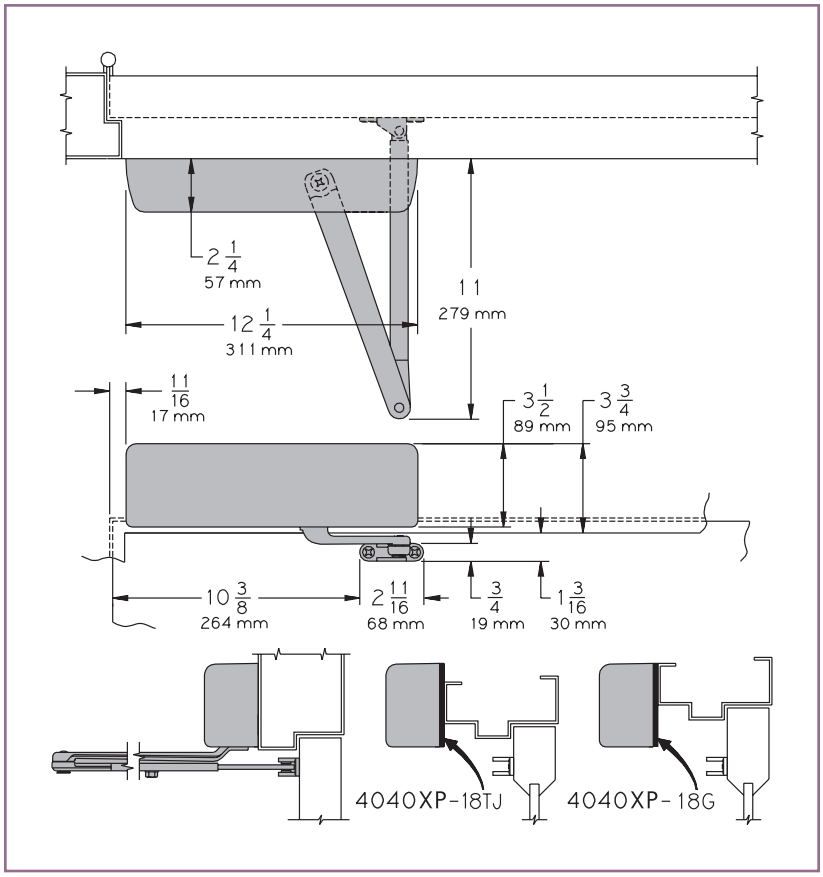

TOP JAMB (PUSH SIDE) MOUNTING

MAXIMUM OPENING

Templating allows up to 120º.

Hold-open points 85º up to 120º with hold-open arm.

- **Butt Hinges** should not exceed 5″ (127 mm) in width.
- **Auxiliary Stop** is recommended at hold-open point or where a door cannot swing beyond 120º.
- **Reveal** of 2-9/16" (65 mm) allows 120º opening for REGULAR ARM or standard Hold-open ARM. 4-13/16" (122 mm) allows up to 120º opening with LONG ARM where standard rod and shoe is replaced with optional LONG ROD AND SHOE 4040XP-79LR. Use H-LONG ARM with LONG HEAD AND TUBE, 4040XP-78HL for hold-open. 8" (203 mm) allows up to 120º opening with EXTRA LONG ARM where standard rod and shoe is replaced with optional EXTRA LONG ROD AND SHOE, 4040XP-79ELR.
- **Top Rail** requires 1-1/4″ (32 mm) minimum.
  2-1/4″ (57 mm) minimum with closer on PLATE, 4040XP-18TJ.
  3″ (76 mm) minimum with closer on PLATE, 4040XP-18G.
- **Head Frame** less than 3-1/2" (89 mm) requires PLATE, 4040XP-18TJ. With flush ceiling, use PLATE, 4040XP-18G. Either plate requires 1-3/4" (44 mm) minimum.
- ***Delayed Action** Incorporates standard 4041 cylinder, without XP cylinder. Delays closing from 120º to 70º. Delay time adjustable up to approximately 1 minute.

Options

- 4041 Delayed action cylinder*.
- Hold-open arm.
- Metal cover.

Customized installation templates or products may be available to solve unusual applications. Contact LCN Product Support for assistance.

PHONE 877-671-7011
FAX 800-248-1460
www.allegion.com/us
2/14

4040XP SERIES

MOUNTING DETAILS

PARALLEL ARM (PUSH SIDE) MOUNTING

Optional mounting requires PA SHOE, 4040XP-62PA for regular or HOLD-OPEN arms. Add prefix "P" to closer description (eg. P4040XP). P4040XP closer includes 4040XP-201 FIFTH HOLE SPACER to support PA SHOE.

MAXIMUM OPENING

180º opening/hold-open points with all except CUSH arms.

110º opening/hold-open with CUSH arms.

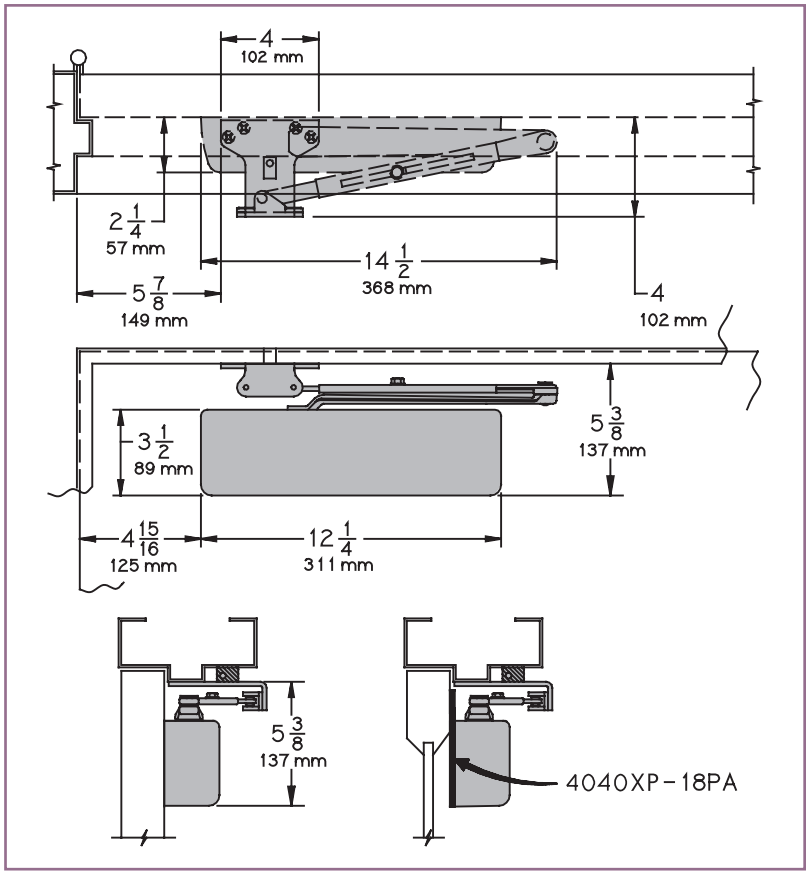

- **Butt Hinges** should not exceed 5" (127 mm) in width.
- **Auxiliary Stop** is recommended at hold-open point, where the door cannot swing 180º, or where CUSH-N-STOP arm is not used.
- **Clearance** for 4040XP-62PA shoe is 4" (102 mm) from door face.
  EDA shoe projects 5-1/2" (140 mm) from door face.
  CUSH shoe projects 6" (152 mm) from door face.
- **Top Rail** less than 5-3/8" (137 mm) measured from the stop requires PLATE, 4040XP-18PA. Plate requires 2" (51 mm) minimum from the stop.
- **Head Frame** flush or rabetted requires PA SHOE ADAPTER, 4040XP-419.
- **Stop Width** minimum 1" (25 mm). CUSH arm requires minimum 1-1/2" (38 mm).
- **Blade Stop** clearance requires 1/2˝ (13mm) BLADE STOP SPACER, 4040XP-61.
- ***Delayed Action** Incorporates standard 4041 cylinder, without XP cylinder. Delays closing from 120º to 70º. Delay time adjustable up to approximately 1 minute.

Options

- 4041 Delayed action cylinder*.
- Hold-open, EDA, HEDA, CUSH, HCUSH, SPRING CUSH or SPRING HCUSH arm.
- Metal cover.

Special Templates

Customized installation templates or products may be available to solve unusual applications. Contact LCN Product Support for assistance.

4040XP SERIES EDA MOUNT

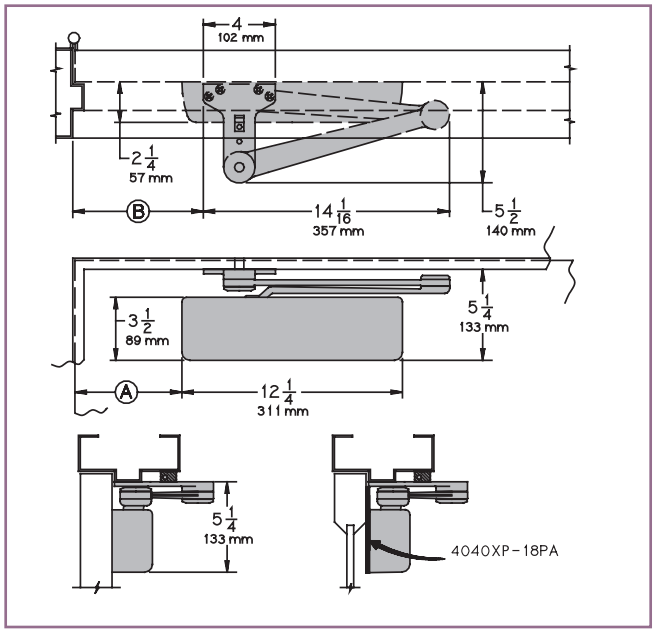

4040XP SERIES CUSH MOUNT

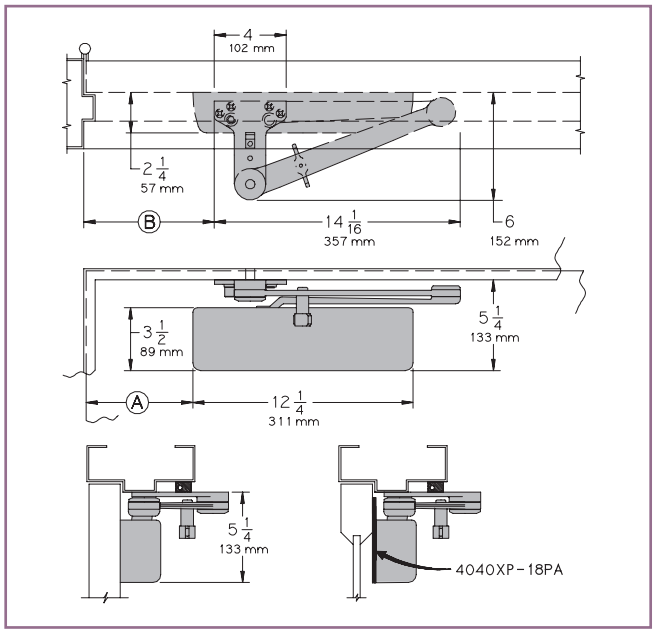

- **Clearance** for 4040XP-62EDA is 5-1/2" (140 mm) from door face. 6" (152 mm) for CUSH.
- **Head Frame** flush or rabetted requires CUSH FLUSH PANEL ADAPTER, 4040XP-419.
- **CUSH ARM** requires SHOE SUPPORT, 4040XP-30 for fifth screw anchorage for narrow frames.
- ***Delayed Action** Incorporates standard 4041 cylinder, without XP cylinder. Delays closing from maximum opening to ; 115˚ with 180˚ template, 95˚ with 110˚ template, 85˚ with 100˚ template, 75˚ with 90˚ template. Delay time adjustable up to approximately 1 minute.

Mounting details are the same as 4040XP Series REGULAR or HOLD-OPEN except as listed below. 4040XP Series closers ordered with EDA or CUSH arms include 4040XP-201 FIFTH HOLE SPACER to support the shoe.

MAXIMUM OPENING

EDA arm can be templated for points at: 110º,
Ⓐ = 6-3/8" (162 mm)
Ⓑ = 7-3/4" (197 mm)
or 180º.
Ⓐ = 2-7/8" (73 mm)
Ⓑ = 4-1/4" (108 mm)
Hold-open points up to maximum opening with HEDA arm.

CUSH arms can be templated for opening/hold-open point at:
85º,
Ⓐ = 7-15/16" (202 mm)
Ⓑ = 9-1/8" (232 mm)
90º,
Ⓐ = 7-3/16" (183 mm)
Ⓑ = 8-1/2" (216 mm)
100º,
Ⓐ = 6-1/16" (154 mm)
Ⓑ = 7-1/4" (184 mm)
or 110º.
Ⓐ = 5-1/16" (129 mm)
Ⓑ = 6-3/8" (162 mm)

Spring Cush dead stop points are approximately 5˚ more than templated stop point. Hold open at templated stop points.

PHONE 877-671-7011
FAX 800-248-1460
www.allegion.com/us
2/14

4040XP SERIES

CYLINDERS

CYLINDER, 4040XP-3071
Heavy duty, non-handed cast iron cylinder assembly.
CYLINDER, 4041-3071 DEL
Cylinder used for delayed action options.

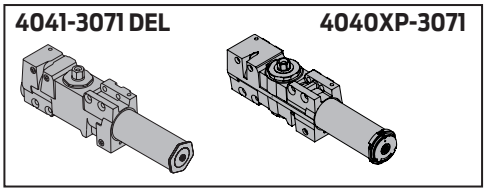

COVERS

COVER, 4040XP-72
Standard, non-handed plastic cover.
METAL COVER, 4040XP-72MC
Optional, handed cover. Required for plated finishes and custom powder coat finishes.

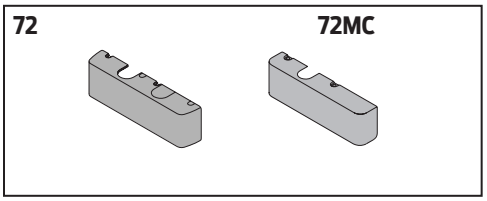

ARMS

REGULAR ARM, 4040XP-3077
Non-handed arm mounts pull side or top jamb with shallow reveal. P4041 closer includes PA SHOE, 4040XP-62PA required for parallel arm mounting.
PA SHOE, 4040XP-62PA
Required for parallel arm mounting.
LONG ARM, 4040XP-3077L
Optional non-handed arm includes LONG ROD AND SHOE, 4040XP-79LR for top jamb mount.
EXTRA LONG ARM, 4040XP-3077ELR
Optional non-handed arm includes EXTRA LONG ROD AND SHOE, 4040XP-79ELR for top jamb mount with deep reveal.
HOLD-OPEN ARM, 4040XP-3049
Optional, non-handed arm mounts pull side or top jamb with shallow reveal, hold-open adjustable shoe. 4040XP closer includes 4040XP-62PA shoe required for parallel arm mounting.
LONG HOLD-OPEN ARM, 4040XP-3049L
Optional non-handed arm includes LONG HEAD AND TUBE, 4040XP-3048L for top jamb mount.
EXTRA DUTY ARM, 4040XP-3077EDA
Non-handed parallel arm features forged, solid steel main and forearm for potentially abusive installations.
HOLD-OPEN EXTRA DUTY ARM, 4040XP-3049EDA
Handed parallel arm features forged, solid steel main and forearm for potentially abusive installations. Hold-open function is adjusted at the shoe.
EXTRA DUTY ARM WITH 62G, 4040XP-3077EDA/62G
Non-handed parallel arm features forged, solid steel main and forearm for potentially abusive installations. 62G shoe provides additional blade stop clearance.
HOLD-OPEN EXTRA DUTY ARM WITH 62G, 4040XP-3049EDA/62G
Handed parallel arm features forged, solid steel main and forearm for potentially abusive installations. 62G shoe provides additional blade stop clearance. Hold-open function is adjusted at the shoe.

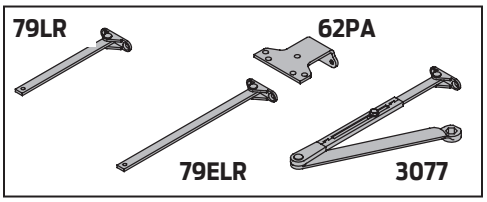

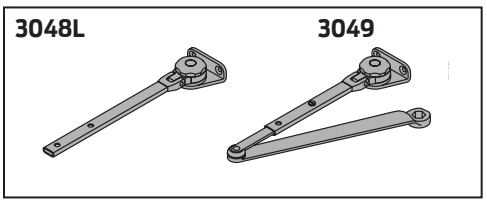

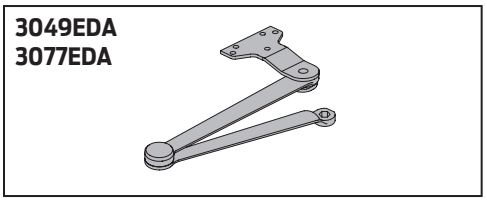

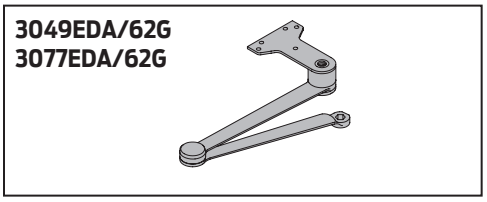

PHONE 877-671-7011
FAX 800-248-1460
www.allegion.com/us
2/14

ARMS CONT.

CUSH-N-STOP® ARM, 4040XP-3077CNS
Optional, non-handed parallel arm features solid forged steel main arm and forearm with stop in soffit shoe.

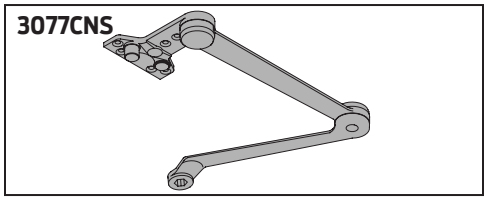

HCUSH ARM, 4040XP-3049CNS
Provides hold-open function with templated stop/hold-open points. Handle controls hold-open function.

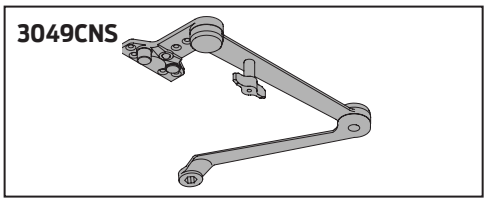

SPRING CUSH ARM, 4040XP-3077SCNS
Optional, non-handed parallel arm for abusive applications features solid forged steel main arm and forearm with spring loaded stop in the soffit shoe.

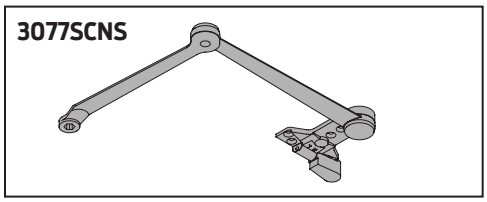

SPRING HCUSH ARM, 4040XP-3049SCNS
Optional, non-handed parallel arm for abusive applications features solid forged steel main arm and forearm with spring loaded stop in the soffit shoe. Handle controls hold-open function.

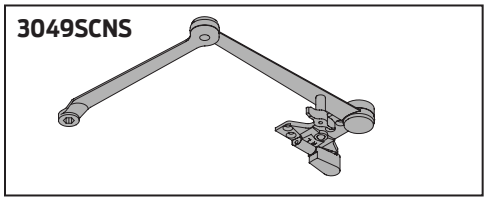

INSTALLATION ACCESSORIES

PLATE, 4040XP-18
Required for hinge side mount where top rail is less than 3-3/4" (95 mm). Plate requires minimum 2" (51 mm) minimum top rail.

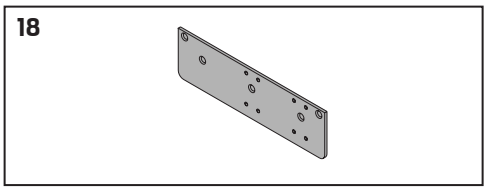

PLATE, 4040XP-18G
Locates top jamb mounted closer flush with top of head frame face in flush ceiling condition. Plate requires 1-3/4" (44 mm) minimum head frame.

PLATE, 4040XP-18TJ
Centers top jamb mounted closer vertically on head frame where face is less than 3-1/2" (89 mm). Plate requires 1-3/4" (44 mm) minimum head frame.

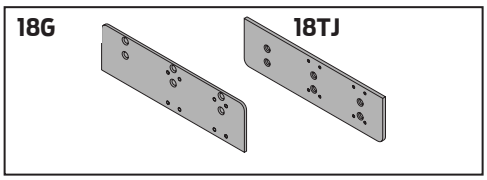

PLATE, 4040XP-18PA
Required for parallel arm mounting where top rail is less than 5-1/2" (140 mm), measured from the stop. Plate requires 2" (51 mm) minimum top rail.

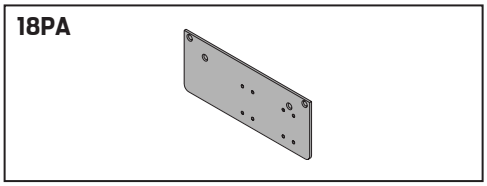

PHONE 877-671-7011
FAX 800-248-1460
www.allegion.com/us
2/14

4040XP SERIES

INSTALLATION ACCESSORIES CONT.

CUSH SHOE SUPPORT, 4040XP-30
Provides anchorage for fifth screw used with CUSH arms, where reveal is less than 3-1/16" (78 mm).

BLADE STOP SPACER, 4040XP-61
Required to lower parallel arm shoe to clear 1/2" (13 mm) blade stop.

PA FLUSH PANEL ADAPTER, 4040XP-419
Provides horizontal mounting surface for parallel arm shoe on single rabetted or flush frame.

AUXILIARY SHOE, 4040XP-62A
Requires a top rail of 7" (178 mm). Optional shoe replaces -62PA for parallel arm mounting of regular arm with overhead holder/stop.

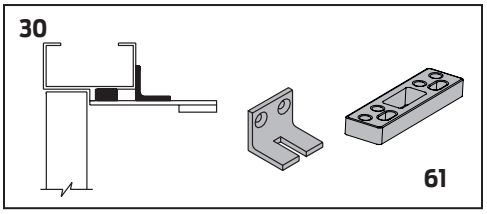

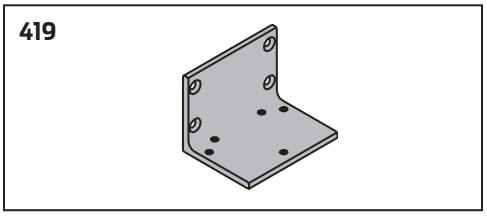

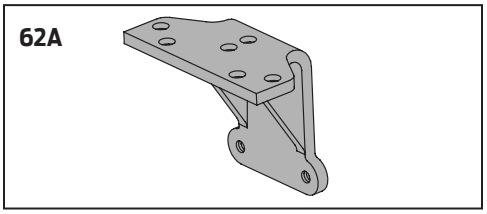

PHONE 877-671-7011
FAX 800-248-1460
www.allegion.com/us
2/14

TABLE OF SIZES

4040XP cylinders are adjustable from size 1 through size 6 and is shipped set to size 3.
Closing power of 4040XP Series closers may be adjusted 50%.

EXTERIOR (and VESTIBULE) DOOR WIDTH

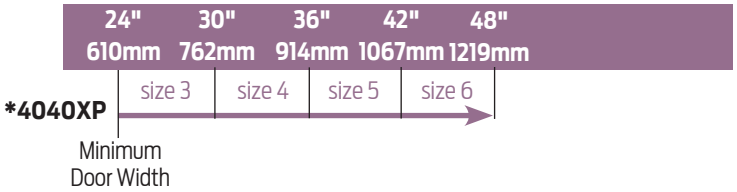

INTERIOR DOOR WIDTH

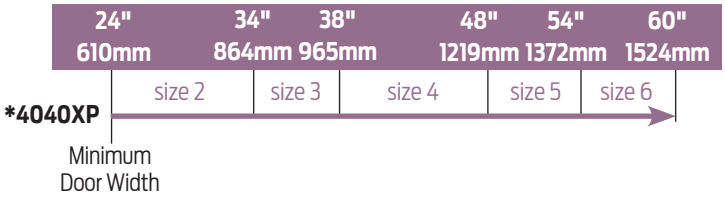

→ Indicates recommended range of door width for closer size.

** Adjustable Size 1 thru 6.*

REDUCED OPENING FORCE 4040XP SERIES CLOSERS

CAUTION ! Any manual door closer, including those certified by BHMA to conform to ANSI Standard A156.4, that is selected, installed and adjusted based on ADA or other reduced opening force requirements may not provide sufficient power to reliably close and latch a door.

Refer to POWER OPERATORS section for information on systems that meet reduced opening force requirements without effecting closing power.

	DOOR WIDTH	36"	42"	48"
♿	8.5* lbs.	4040XP	4040XP	4040XP
	5.0* lbs.	4040XP	4040XP	4040XP

** Maximum opening force.*

HOW-TO-ORDER 4040XP SERIES CLOSERS

1. SELECT FINISH

☐ Standard Powder Coat _____
Aluminum, Dark Bronze, Statuary, Light Bronze, Black, Brass.

Closer will be shipped with:
- STANDARD CLIP-ON COVER
- SPECIFY ARM WHEN ORDERING
- SELF-REAMING and TAPPING SCREWS,

unless options listed below are selected.

CLOSER OPTIONS

CYLINDER
☐ Delayed Action (4041 DEL)

COVER
☐ Metal (specify right or left hand) (MC)

FINISH
☐ Custom Powder Coat (RAL) _____
(handed metal cover required)
☐ Plated Finish, US _____
(handed metal cover required)
☐ SRI primer (use with powder coat finishes only)

ARM
☐ Regular (REG)
☐ Regular w/62PA (Rw/PA)
☐ Regular w/62A (R/62A)
☐ Long (LONG)
☐ Extra Long (XLONG)
☐ Hold-Open (H)
☐ Hold-Open w/62PA (Hw/PA)
☐ Long Hold-Open (HLONG)
☐ Extra Duty Arm (EDA)
☐ Extra Duty Arm with 62G (EDA/62G)
☐ Hold Open Extra Duty Arm (HEDA) (Handed)
☐ Hold Open Extra Duty Arm with 62(HEDA/62G)(Handed)
☐ Cush-N-Stop (CUSH)
☐ HCush-N-Stop (HCUSH)
☐ Spring Cush (SCUSH)
☐ Spring HCush (SHCUSH)

OPTIONAL SCREW PACKS
☐ TB* w/Self-Reaming and Tapping (TBSRT)
☐ Wood & Machine Screw (WMS)
☐ TB*, Wood & Machine Screw (TBWMS)
☐ TORX Machine Screw (TORX)
☐ TB* & TORX Machine Screw (TBTRX)
** Specify door thickness if other than 1-3/4˝.*

INSTALLATION ACCESSORIES
☐ Plate, 4040XP-18
☐ Plate, 4040XP-18TJ
☐ Plate, 4040XP-18G
☐ Plate, 4040XP-18PA
☐ CUSH Shoe Support, 4040XP-30
☐ Blade Stop Spacer, 4040XP-61
☐ Auxiliary Shoe, 4040XP-62A
☐ PA Flush Panel Adapter, 4040XP-419

SPECIAL TEMPLATE
☐ ST- _____

PHONE 877-671-7011
FAX 800-248-1460
www.allegion.com/us
2/14

Digital Control Suite
Provides exceptionally precise control of a large range of built-in functions combined with superior durability and performance. Visual indications and digital readouts of all control function settings and activity make adjustments easy, fast and accurate.

Dual Independent Program Memories
Each unit is pre-programmed to factory default settings. The installer can adjust the unit to meet the job site requirements. These field settings are locked into the computer's memory. Any subsequent field adjustments replace the original field adjustments. The factory settings are always retained in memory and can be recalled to replace the field settings in just seconds, restoring the unit to its original programming.

On-Board Diagnostics
Sophisticated built-in diagnostics program monitors the system microprocessor, power supplies, drive systems, actuators and safety circuits. Reduces the time required to make sure the installation is complete and correct.

On-Board Power Supply
Provides 24V AC output or 24V DC output with rectifier to power card readers, manual actuators and other peripherals.

Plug and Play Sensors
Motion sensors and safety sensors feature a "plug and play" concept allowing fast and accurate wiring connections in only seconds.

Electronic Circuit Protection
High voltage (primary AC input) is protected by replaceable fuse. Low voltage (secondary AC output) is protected by self-resetting fuses.

Visual Function Indicators
LED Display allows direct observation of these inputs while in visual function indicator mode:

- Key switch- set to Auto, OFF or HOLD
- Activate
- DMSS approach
- DMSS safety
- Bodyguard
- Power Boost Disable

Programming Mode
Allows tailoring the following functions to meet specific site conditions

- Opening Speed
- Backcheck Speed
- Backcheck Position
- Hold Open Delay
- Latch Position
- Auto Reverse - Closing
- Electric Lock Delay
- Power Boost
- Push N' Go
- Alternate Action
- Safety Slow/Stop
- Slow Down Disable

Push 'N Go
Allows pedestrians to walk up to the door and push it open as if it were a manual door. After the door is manually opened approximately 5 degrees, the Push 'N Go feature takes over and continues to open the door – slowly and automatically to the full open position. With Push 'N Go, the door will stay fully open from one to 30 seconds, depending on the time delay chosen.

Auto Reverse
A safety feature that reverses the direction of the door when it comes into contact with an object during either opening or closing.

Safety Slow/Stops Function
Once the door starts opening, any person or object entering the swing area will cause the door to go into a safety slow speed. This function can be set to allow for a short stop once a person or object is sensed.

Power Boost
Adds an additional latching force to ensure secure latching in severe wind or stack conditions. Power Boost is also ideal for overcoming slowing obstacles such as electric strikes. Provides approximately 25 lbs. of total closing force.

Microprocessor
Control unit allows for quiet efficiency in operation. Combined with the all electromechanical unit, it eliminates unnecessary wear and prolongs the life of the unit.

Electric Lock Delay
Causes a 1 second delay between activate signal and door opening to allow time for most electric locks to disengage before operator opens door.

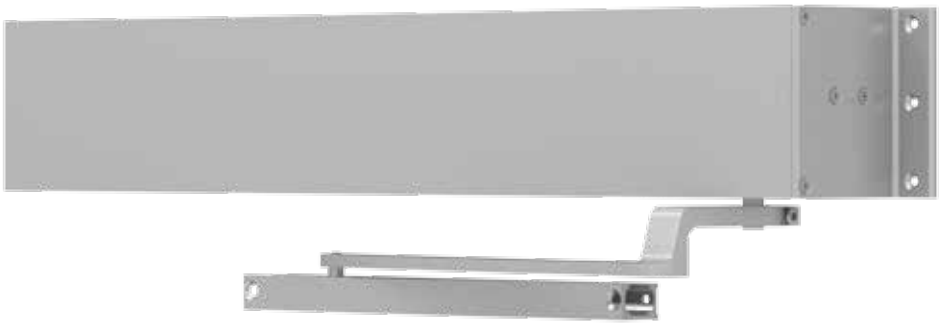

The 9530 SENIOR SWING by LCN is an ADA door operator that is a two-in-one swing door operator. SENIOR SWING operators when activated, opens doors automatically for wheelchair access, yet allows for manual operation for regular pedestrian traffic.

Certifications	Grade 1 - ANSI A156.19, UL325/228, UL1998, ADA, 100 Hour Salt Spray, Meets BAA - Buy American Act
Fluid	All Weather Fluid
Handing	Handed
Door Width	■ Minimum 33″ - 48″ ■ Single door - width per leaf 33″ minimum, 48″ maximum
Warranty	2 years

Fasteners	Machine screw pack
Mounting	Single door, surface mount, offset pivot. butt hinge, pull side
Arms	Standard arm (3077T)
Finishes/Colors/ Powder Coat	■ Anodized Aluminum ■ Anodized Dark Bronze

Special Templates | Customized installation templates or products may be available to solve unusual applications. Contact LCN Product Support for assistance.

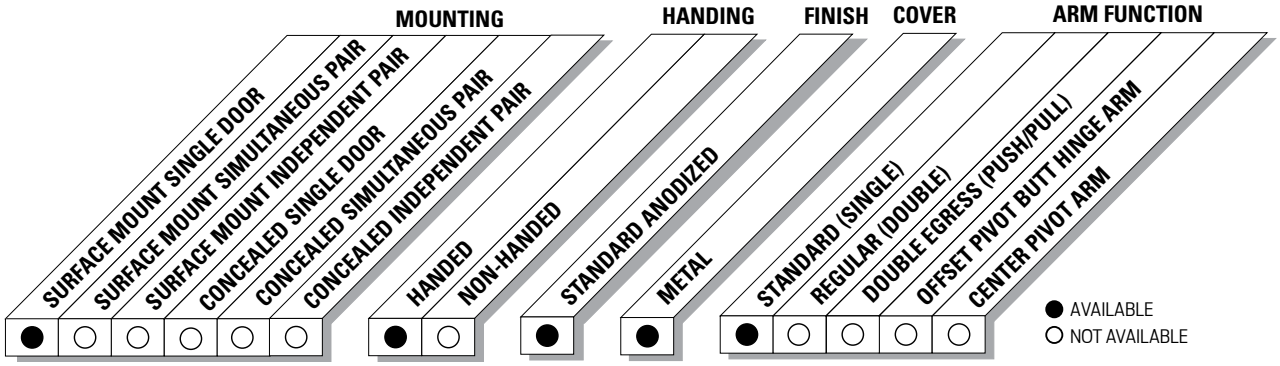

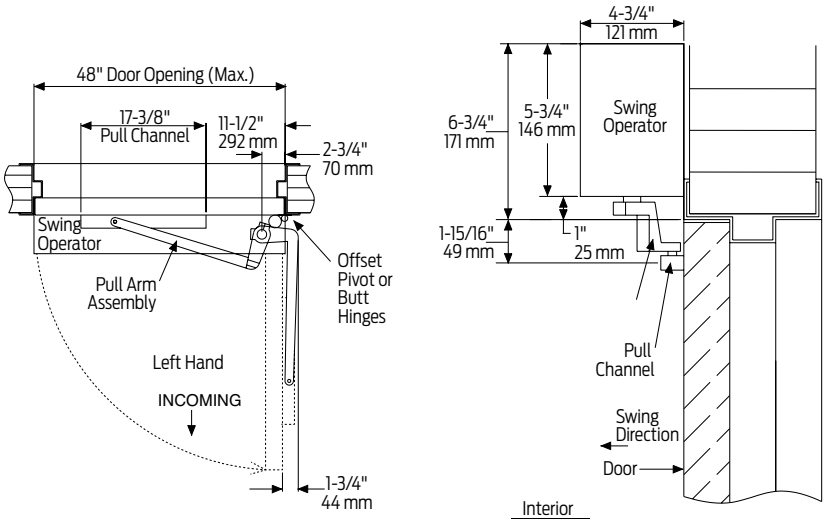

Offset pivot/butt hinge, center pivot, pull

NOTE: Cannot be used with swing clear hinges, pocket pivots or balanced doors.

The 18 plate is 6-3/4" thick and will need to be ordered 3-/1/2" longer than the header to allow for mounting the angle brackets to the vertical side jambs. See illustration below.

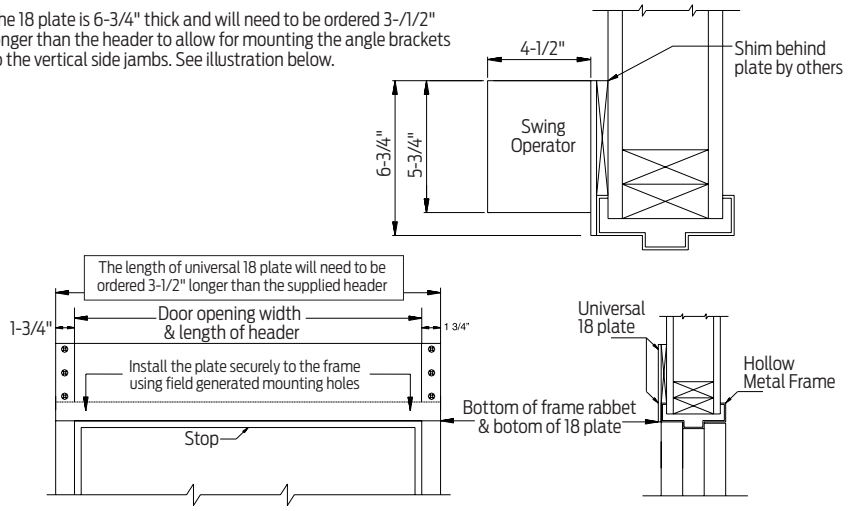

Hollow metal frame

Suggested Installation.

Butt Hinges	Should not exceed 5˝ (127 mm) in width
Reveal	Should not exceed 4˝ (102 mm)
Head Frame	Minimum 1-3/4˝ (44 mm). Face frame 6-3/4˝ (171 mm) total operator clearance
Top Rail	Minimum 2-3/4˝ (70 mm)
Opening and Closing Time	■ Variable by adjustments to the electronic control box ■ Maximum hold open time adjustable up to approximately 32 seconds
System Diagram	See "AUTOMATIC OPERATORS" section page 51 for typical system wiring and page 53 for electrical data
Maximum Opening	Template allows 90 degree power opening and 90 degree manual opening

Notes:
- *Push N' Go permits non-switch activation with a power boost providing additional latching force*
- *Electromechanical unit with microprocessor control*
- *Digital keypad for easy setup*
- *36" header length is standard. Specify 33" - 48" max*
- *Double door header available up to 98", specify other length 49" - 98" max*
- *Consult factory regarding this option*
- *Adjustable hold open period of 2 - 32 seconds in automatic or manual mode*
- *Actuators available separately, see pages 115-131*

Motor Gearbox

9530-3454
Motor Gearbox

- Senior swing
- Handed
- Driving mechanism for operator
- Provides maximum 15 lbs opening force

Mount Brackets

9530-275
Mounting Bracket

- Motor gearbox mounting bracket for 2-3/4″ offset pivot or butt hinge installations
- Front bracket

9530-3018
Rear Mounting Bracket

- Motor gearbox mounting bracket
- Rear bracket

9530-334-1
Angled Bracket

- Mounting bracket for surface applications (includes 2 mounting brackets)

Control Box

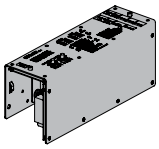

9530-3462
Control Box

- Electronic controlling device for Senior Swing

Headers

9530-3572HL
Header

- Standard
- Single door, single operator
- Specify length 33″ to 48″ maximum

9530-3572DD
Header

- Standard
- Double door, single operator
- Specify length 49″ to 98″ maximum

End Caps

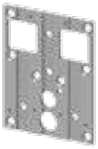

9530-334
Header End Caps

- With openings for wiring

9530-334-2
End Dress Plate

- Metal finish end cap

Arms

9530-3077PLCM
Standard Arm Assembly

- Handed
- Track roller included (includes 3038, 3077T, 3034 & 73)

9530-3077T
Standard Arm

- Handed
- Track roller not included

Tracks

9530-3038
Track

- Non-handed
- Includes 3034 & 73

9530-73
Track End Cap

- Black plastic end caps

9530-3034
Roller

- Quiet low friction roller assembly

Installation Assembly

9530-11A
Spindle Plate

- Hides bottom of motor gearbox
- Completes header box
- Cutout allows for motor gearbox shaft
- For 2-3/4″ offset pivot or butt hinge installations

9530-12
Filler

- Plate blank
- Completes length of header box (specify Length)

9530-18
Mounting Plate

- Optional mounting plate for standard hollow metal door frames
- Specify length 36-1/2″ to 101-1/2″ maximum, when angle brackets
- Specify length 33″ to 98″ maximum when using end dress plates

NOTE: The length of a universal 18 plate will need to be ordered 3-1/2″ longer than the supplied header when using angle brackets

How-to-order 9530 Series closers

Specify hand
☐ RH
☐ LH

Specify header/length
☐ HL __ (Specify length 33″ to 48″)
☐ DD __ (Specify length 49″ to 98″)

Specify finish
☐ Standard Anodized Finish _____
Aluminum or Dark Bronze

Operator will be shipped with:
- Standard motor gearbox
- Standard control box
- Header (at specified length, 36″ standard)
- Standard arm (3077T)
- 2-3/4″ pivot point
- Standard track w/track roller
- Machine screw pack

unless options listed below are selected

Operator options

Mounting plate
☐ Plate, ___ (Specify Length 33″ to 101-1/2″)

Table of sizes

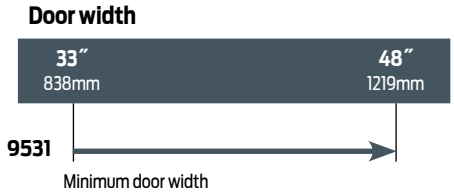

Indicates recommended range of door width for operator.

NOTE: For all Senior Swing Series.
Single Door - Width per leaf 33″ minimum, 48″ maximum.

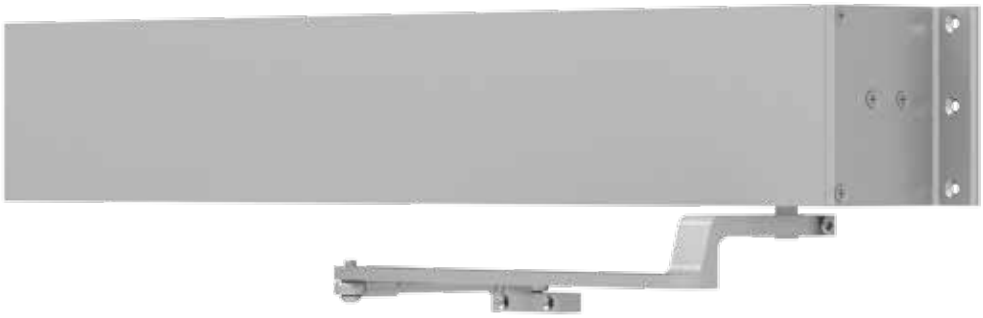

The 9540 SENIOR SWING by LCN is an ADA door operator that is a two-in-one swing door operator. SENIOR SWING operators when activated, opens doors automatically for wheelchair access, yet allows for manual operation for regular pedestrian traffic.

Certifications	Grade 1 - ANSI A156.19, UL325/228, UL1998, ADA, 100 Hour Salt Spray, Meets BAA - Buy American Act
Fluid	All Weather Fluid
Handing	Handed
Door Width	■ Minimum door width 33″ - 48″ ■ Single door - width per leaf 33″ minimum, 48″ maximum
Warranty	2 years

Fasteners	Machine screw pack
Mounting	Single door, surface mount, offset pivot, butt hinge (Pull Side)
Arms	Regular Arm (3077)
Finishes/Colors/ Powder Coat	■ Anodized Aluminum ■ Anodized Dark Bronze

Special Templates | Customized installation templates or products may be available to solve unusual applications. Contact LCN Product Support for assistance.

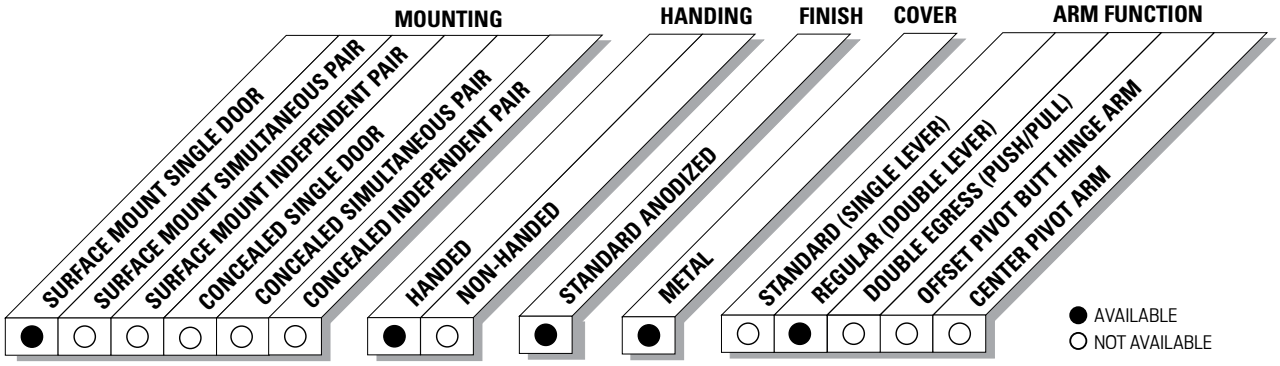

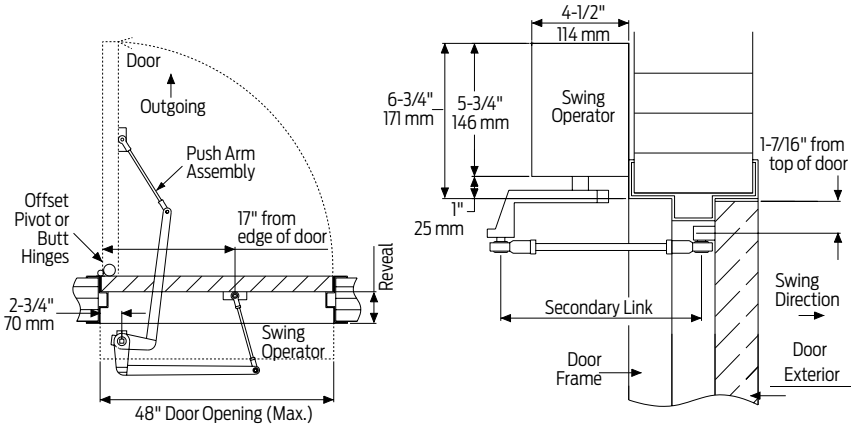

Offset pivot/butt hinge, center pivot, push
Consult factory for all balance door installations.

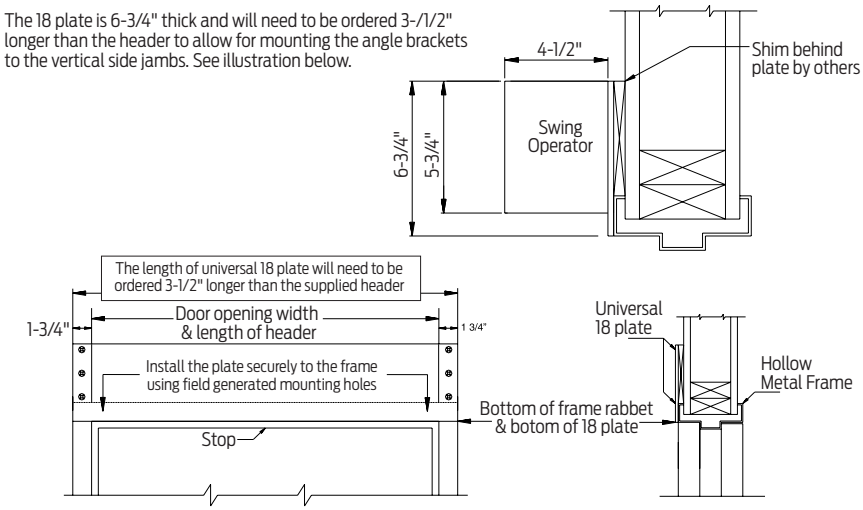

Hollow metal frame
Suggested Installation.

Butt Hinges	Should not exceed 5˝ (127 mm) in width
Reveal	push installations should not exceed 10˝ (254 mm) for REGULAR ARM and 20˝ (508 mm) for LONG ARM
Head Frame	Minimum 1-3/4˝ (44 mm). Face frame 6-3/4˝ (171 mm) total operator clearance
Top Rail	Minimum 2-3/4˝ (70 mm)
Opening and Closing Time	▪ Variable by adjustments to the electronic control box ▪ Maximum hold open time adjustable up to approximately 32 seconds
System Diagram	See "AUTOMATIC OPERATORS" section page 51 for typical system wiring and page 53 for electrical data
Maximum Opening	Template allows 90 degree power opening and 90 degree manual opening

Notes:
- *Push N' Go permits non-switch activation with a power boost providing additional latching force*
- *Electromechanical unit with microprocessor control*
- *Digital keypad for easy setup*
- *36" header length is standard. Specify 33" - 48" max*
- *Double door header available up to 98", specify other length 49" - 98" max*
- *Adjustable hold open period of 2 - 32 seconds in automatic or manual mode*
- *Actuators available separately, see pages 115-131*

Motor Gearbox

9540-3454
Motor Gearbox

- Senior swing
- Handed
- Driving mechanism for operator
- Provides maximum 15 lbs opening force

Mount Brackets

9540-275
Mounting Bracket

- Motor gearbox mounting bracket for 2-3/4″ offset pivot or butt hinge installations
- Front bracket

9540-3018
Rear Mounting Bracket

- Motor gearbox mounting bracket
- Rear bracket

9540-334-1
Angled Bracket

- Mounting bracket for surface applications (includes 2 mounting brackets)

Control Box

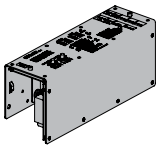

9540-3462
Control Box

- Electronic controlling device for Senior Swing

Headers

9540-3572HL
Header

- Single door, single operator
- Specify length 33″ to 48″ maximum
- Standard

9540-3572DD
Header

- Double door, single operator
- Specify length 49″ to 98″ maximum
- Standard

End Caps

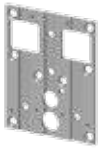

9540-334
Header End Caps

- With openings for wiring

9540-334-2
End Dress Plate

- Metal finish end cap

Arms

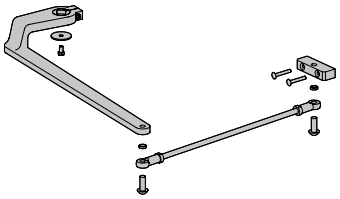

9540-3077
Regular Arm Assembly

- Handed
- Includes 77 main arm assembly and 79 linkage assembly

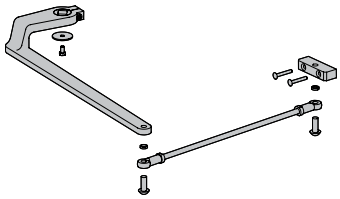

9540-3077L
Regular Long Arm Assembly

- Handed
- Includes 77 main arm assembly and 79LR linkage assembly

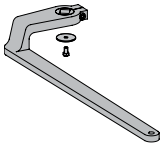

9540-77
Main Arm

- Handed
- Attaches to motor gearbox

Tracks

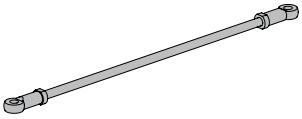

9540-79
Linkage Assembly - 15″

- Threaded rod attaches to door
- Extends from main arm

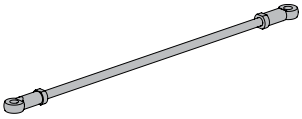

9540-79LR
Linkage Assembly - 32″

- Threaded long rod attaches to door
- Extends from main arm.
- Used for reveal 10″ to 20″

Installation Accessories

9540-11A
Spindle Plate

- Hides bottom of motor gearbox
- Completes header box
- Cutout allows for motor gearbox shaft
- For 2-3/4″ offset pivot or butt hinge installations

9540-12
Filler Plate Blank

- Completes length of header box (specify length)

9540-18
Mounting Plate

- For standard hollow metal door frames
- Specify length 55-1/2″ to 101-1/2″ maximum when using angle brackets
- Specify length 52″ to 98″ maximum when using dress plates
- Optional

NOTE: The length of a universal 18 plate will need to be ordered 3-1/2″ longer than the supplied header when using angle brackets.

How-to-order 9540 Series closers

Specify hand
☐ RH
☐ LH

Specify header/length
☐ HL __ (Specify length 33″ to 48″)
☐ DD __ (Specify length 49″ to 98″)

Specify finish
☐ Standard Anodized Finish _____
Aluminum or Dark Bronze

Operator will be shipped with:
- Standard motor gearbox
- Standard control box
- Header (at specified length, 36″ standard)
- Regular arm (3077)
- 2-3/4″ pivot point
- Machine screw pack

unless options listed below are selected.

Operator options

Mounting plate
☐ Plate, ___ (Specify Length 33″ to 101-1/2″)

Arm
☐ Long Arm (3077L)

Table of sizes

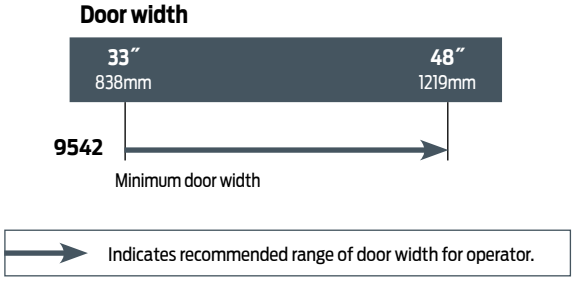

NOTE: For all Senior Swing Series.
Single Door - Width per leaf 33″ minimum, 48″ maximum.

The 9550 SENIOR SWING by LCN is an ADA door operator that is a two-in-one swing door operator. SENIOR SWING operators when activated, opens doors automatically for wheelchair access, yet allows for manual operation for regular pedestrian traffic.

Certifications	Grade 1 - ANSI A156.19, UL325/228, UL1998, ADA, 100 Hour Salt Spray, Meets BAA - Buy American Act
Handing	Handed
Door Width	■ Minimum combined door width 52″ - 98″ (push) ■ Minimum combined door width 60″ - 98″ (pull; double egress) ■ Simultaneous pair - width per leaf 30″ minimum - 48″ maximum
Warranty	2 years

Fasteners	Machine screw pack
Mounting	Simultaneous pair, surface mount, pull side, push side, double egress
Arms	■ 2 Regular Arms (push) ■ 2 Standard Arms (pull) ■ 1 Regular and 1 Standard (double egress)
Finishes/Colors/ Powder Coat	■ Anodized Aluminum ■ Anodized Dark Bronze

Special Templates | Customized installation templates or products may be available to solve unusual applications. Contact LCN Product Support for assistance.

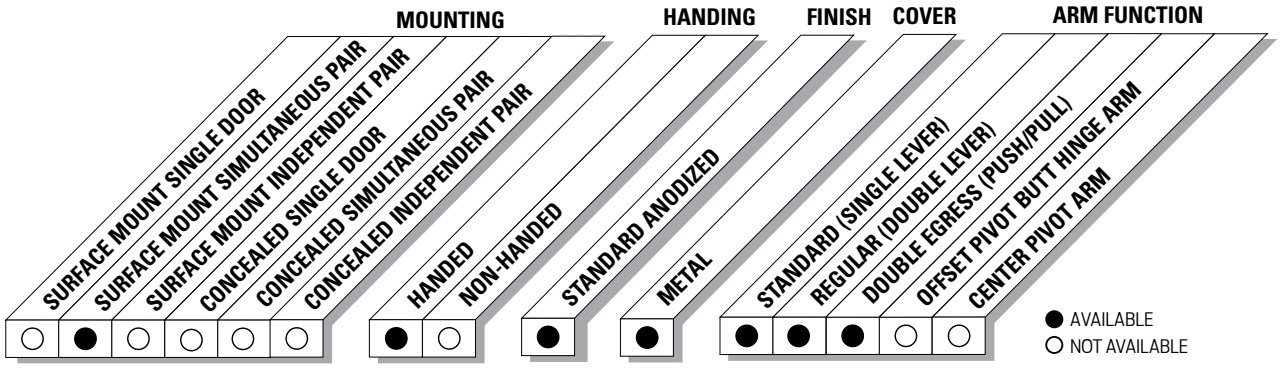

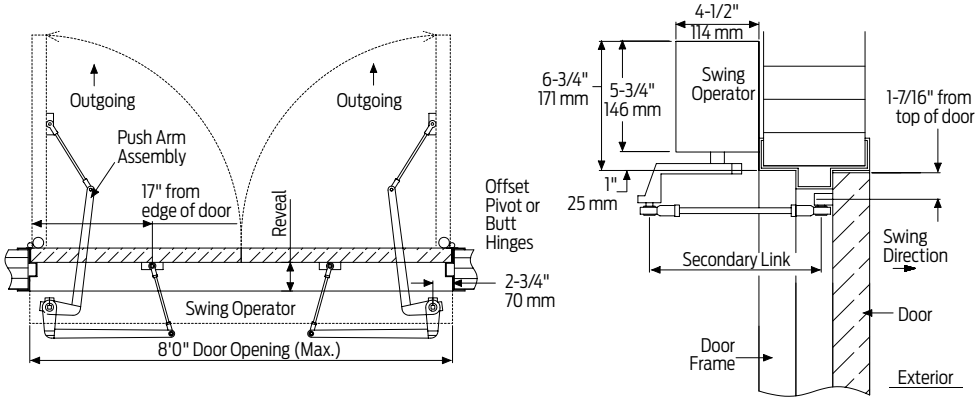

Offset pivot/butt hinge, center pivot, push
Consult factory for all balanced door installations.

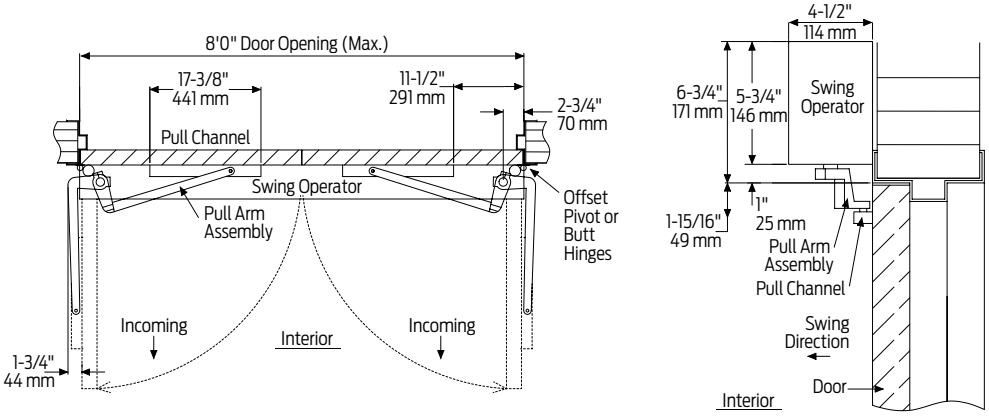

Offset pivot/ butt hinge, center pivot, pull
NOTE: Cannot be used with swing clear hinges, pocket pivots or balanced doors.

Butt Hinges	Should not exceed 5″ (127 mm) in width
Reveal for push	Should not exceed 10″ (254 mm) for REGULAR ARM and 20″ (508 mm) for LONG ARM
Reveal for pull	Should not exceed 4″ (102 mm)
Reveal	Double egress installations should not exceed 4″ (102 mm)
Head Frame	▪ Minimum 1-3/4″ (44 mm) ▪ Face frame 6-3/4″ (171 mm) total operator clearance
Top Rail	Minimum 2-3/4″ (70 mm)
Opening and Closing Time	▪ Variable by adjustments to the electronic control box ▪ Maximum hold open time adjustable up to approximately 32 seconds.
Door Stop	Required for each door panel
System Diagram	See "AUTOMATIC OPERATORS" section page 51 for typical system wiring and page 53 for electrical data
Maximum Opening	Template allows 90 degree power opening and 90 degree manual opening

Notes:
• Push N' Go permits non-switch activation with a power boost providing additional latching force
• Electromechanical unit with microprocessor control
• Digital keypad for easy setup
• 72" header length is standard. Specify other length 52" - 98" (push), specify other length 60" - 98" (pull; double egress). Consult factory regarding this option
• Adjustable hold open period of 2 - 32 seconds in automatic or manual mode
• Actuators available separately, see pages 115-131

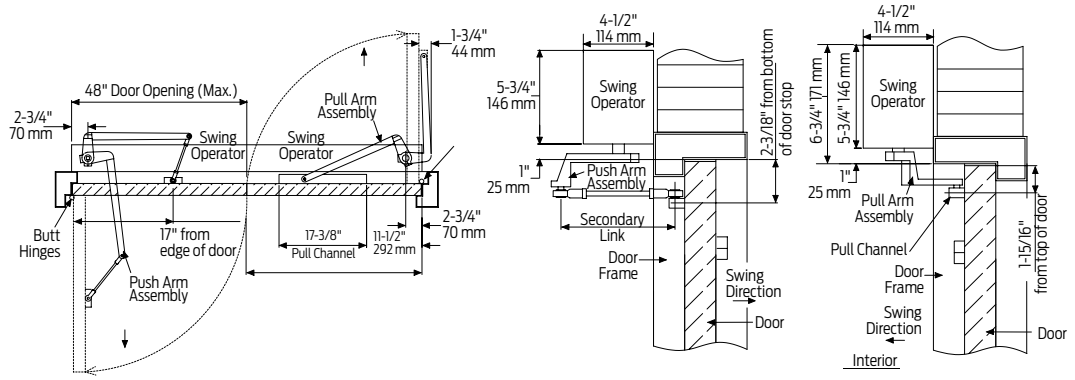

RH double egress

Double egress applications with safety sensors require LCN 9560 series.

NOTE: Cannot be used with swing clear hinges, pocket pivots or balanced door.

The 18 plate is 6-3/4" thick and will need to be ordered 3-/1/2" longer than the header to allow for mounting the angle brackets to the vertical side jambs. See illustration below.

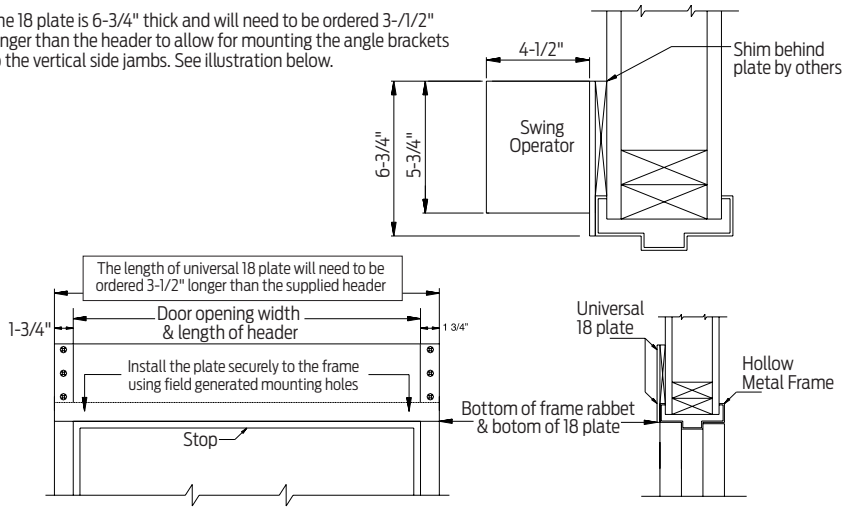

Hollow metal frame

Suggested Installation.

Butt Hinges	Should not exceed 5˝ (127 mm) in width
Reveal for push	Should not exceed 10˝ (254 mm) for REGULAR ARM and 20˝ (508 mm) for LONG ARM
Reveal for pull	Should not exceed 4˝ (102 mm)
Reveal	Double egress installations should not exceed 4˝ (102 mm)
Head Frame	▪ Minimum 1-3/4˝ (44 mm) ▪ Face frame 6-3/4˝ (171 mm) total operator clearance
Top Rail	Minimum 2-3/4˝ (70 mm)
Opening and Closing Time	▪ Variable by adjustments to the electronic control box ▪ Maximum hold open time adjustable up to approximately 32 seconds.
Door Stop	Required for each door panel
System Diagram	See "AUTOMATIC OPERATORS" section page 51 for typical system wiring and page 53 for electrical data
Maximum Opening	Template allows 90 degree power opening and 90 degree manual opening

Notes:

- *Push N' Go permits non-switch activation with a power boost providing additional latching force*
- *Electromechanical unit with microprocessor control*
- *Digital keypad for easy setup*
- *72" header length is standard. Specify other length 52" - 98" (push), specify other length 60" - 98" (pull; double egress). Consult factory regarding this option*
- *Adjustable hold open period of 2 - 32 seconds in automatic or manual mode*
- *Actuators available separately, see pages 115-131*

Motor Gearbox

9550-3454
Motor Gearbox

- Senior swing
- Handed
- Driving mechanism for operator
- Provides maximum 15 lbs opening force

Mount Brackets

9550-275
Mounting Bracket

- Motor gearbox mounting bracket for 2-3/4″ offset pivot or butt hinge installations
- Front bracket

9550-3018
Rear Mounting Bracket

- Motor gearbox mounting bracket

9550-334-1
Angled Bracket

- Mounting bracket for surface applications (includes 2 mounting brackets)

Control Box

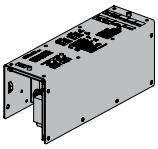

9550-3462
Control Box

- Electronic controlling device for Senior Swing

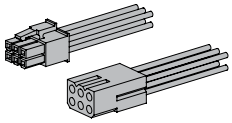

9550-982
Companion Cable

- Cable that allows one control box to run two motor gear boxes
- For use with Senior Swing

Header

9550-3572HL
Header

- Pair door, two operators
- Specify other length 52″ to 98″ (Push)
- Specify other length 60″ to 98″ (Pull; Double Egress)
- Standard

End Caps

9550-334
Header End Caps

- With openings for wiring

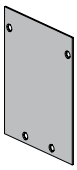

9550-334-2
End Dress Plate

- Metal finish end cap

Tracks

9550-3038
Track

- Non-handed
- Standard

9550-73
Track End Cap

- Black plastic end caps

9550-3034
Roller

- Quiet low friction roller assembly

Arms

9550-3077Plcm
Standard Arm Assembly

- Handed
- Includes 3077 regular arm assembly, 3038 track, and 3034 track roller

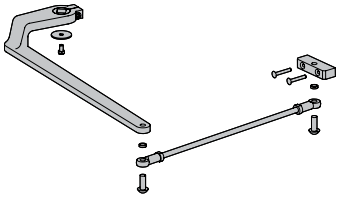

9550-3077
Regular Arm Assembly

- Handed
- Includes 77 main arm assembly and 79 linkage assembly

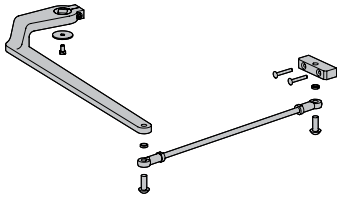

9550-3077L
Regular Long Arm Assembly

- Handed
- Includes 77 main arm assembly and 79LR linkage assembly

9550-3077T
Standard Arm

- Handed
- Track roller not included

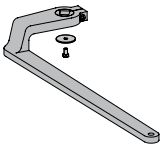

9550-77
Main Arm

- Handed
- Attaches to motor gearbox

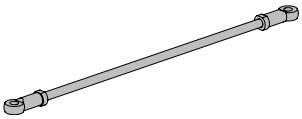

9550-79
Linkage Assembly

- 15″
- Threaded rod attaches to door
- Extends from main arm

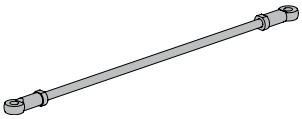

9550-79LR
Linkage Assembly

- 32″
- Threaded long rod attaches to door
- Extends from main arm
- Used for reveal 10″ to 20″

Installation Assembly

9550-11A
Spindle Plate

- Hides bottom of motor gearbox
- Completes header box
- Cutout allows for motor gearbox shaft
- For 2-3/4″ offset pivot or butt hinge installations

9550-12
Filler Plate

- Blank
- Completes length of header box
- Specify length

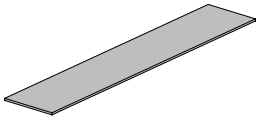

9550-18
Mounting Plate

- Optional mounting plate for standard hollow metal door frames
- Specify length 68-1/2″ to 101-1/2″ maximum when using angle brackets
- Specify length 65″ to 98″ maximum when using dress plates.

NOTE: The length of a universal 18 plate will need to be ordered 3-1/2″ longer than the supplied header when using angle brackets.

How-to-order 9550 Series closers

Specify hand
☐ RH
☐ LH

Specify header/length
☐ HL__ (Specify length 52″ to 98″) regular or long arm
☐ HL__ (Specify length 60″ to 98″) for standard or DE arm

Specify finish
☐ Standard Anodized Finish _____
Aluminum or Dark Bronze

Operator will be shipped with:
- Standard motor gearbox (SF) (2 ea)
- Standard control box (SC)
- Metal cover (at specified length 72″ standard)
- Regular arm (2 ea)
- 2-3/4″ pivot point
- Machine screw pack

unless options listed below are selected

Operator options

Mounting plate
☐ Plate, ___ (Specify Length 52″ to 101-1/2″)

Arm
☐ Standard Arm (2 ea) w/Standard Track (2 ea)
☐ Double Egress includes Standard Arm w/Track (1 ea) & Regular Arm (1 ea)
☐ Long Arm (3077L)

Table of sizes

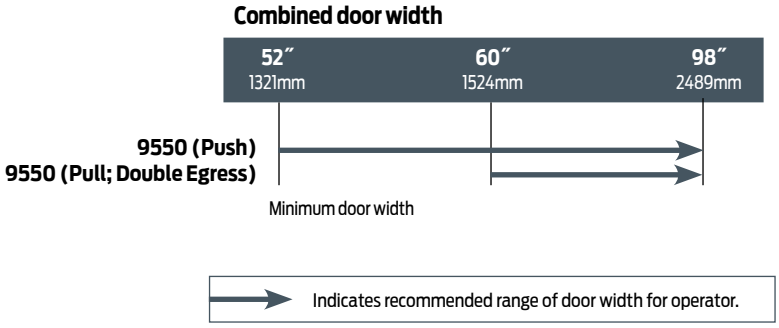

NOTE: For all Senior Swing Series.
Simultaneous Pair – Width per leaf 26" minimum (push) 30″ minimum (pull) to 48″ maximum.

Automatic Operator Actuators & Accessories

8310-836T
Full Length Actuator (FLA)

- Hardwired low voltage actuator with stainless steel touch plate with 36″ x 6″ activation surface
- Blue handicap symbol conforms with most accessibility codes
- Added "PUSH TO OPEN" lettering for enhanced identification
- Designed to meet California building codes and increase accessibility for wheelchair bound entrants
- Can easily be mounted to any flat surface or a bollard post

8310-836TW
Flush Length Actuator (FLA)

- Same as the 8310-836T with a built in wireless transmitter and 3v battery
- Use in conjunction with 8310-865 Receiver (not included)

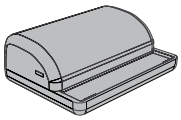

8310-865
Receiver

- Wireless, 1 Channel, w/Sequencing Feature
- Used in conjunction w/ Wireless Actuators & Transmitter(s)

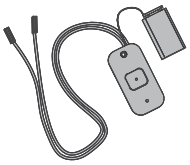

8310-844
Transmitter

- Wireless, 1 Channel, 9v Battery included.
- Used to convert standard actuators to wireless
- Requires 8310-865 Receiver
- Recommended for exterior application with 8310-836T
- Used with the 866FLA bollard post

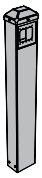

8310-866FLA
FLA Bollard Post

- A powder coated steel 42″ x 4″ x 6″: Bollard Post, mounting base pre prepped for the 8310-836T
- Includes 8310-866 CAP, 2 mounting screws & spacer for installation

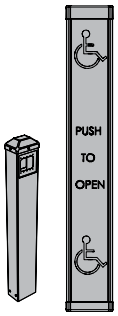

8310-3836T
FLA Bollard Mount Kit

- 36″ x 6″ Actuator with 8310-866FLA Bollard for wired applications

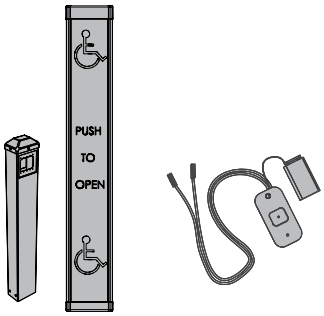

8310-3836TW
FLA Bollard Mount Kit

- 36″ x 6″ Actuator with 8310-866FLA Bollard and 8310-844 wireless Transmitter
- Transmitter requires 8310-865 Receiver (not included)

Meets ANSI/BHMA 156.16, L11291 for brass and L31291 for aluminum.

WS40 Automatic Wall Holder

- Constructed of sturdy cast brass, or aluminum.
- Holder is mounted on wall and strike is mounted on door.
- Roller on holder rides up seats itself on strike, with a heavy duty bumper pad deadening the sound and shock.
- Universal screw pack accommodates all types wall construction.

Dimensions

Base Height: 2”
Base Width: 2-1/2”
Base Projection: 2-1/4”
Engaged Projection: 3-1/2”

Strike Height: 2-1/16”
Strike Width: 3/4”
Strike Projection: 2”

Finishes *brass*

Ives Number	US3	US4	US10	US10B	US26	US26D
BHMA	605	606	612	613	625	626

Finishes *aluminum*

Ives Number	US28
BHMA	628

WS45
Meets ANSI/BHMA 156.16, L11291 for brass and L31291 for aluminum.

WS45
WS45X Automatic Wall Holder

- Constructed of cast brass, bronze or aluminum.
- Spring loaded roller rides up the face of the strike, seating itself on the strike, holding the door firmly in the open position.
- A heavy rubber pad cushions the shock and absorbs the sound.
- With unit mounted on door and the strike on wall, vertical adjustment is available on body.
- The strike is adjustable 45 degrees left or right, both adjustments easily accomplished at time of installation or at a later date.

WS45 strike is furnished with wood screws for drywall mounting.

WS45X strike is furnished with a threaded stud and expansion shield for masonry type mounting.

Dimensions

Base Height: 3-11/16”
Base Width: 3”
Base Projection: 2”
Engaged Projection: 3-7/16”

Strike Diameter: 2-3/8
Strike Projection: 3”

Finishes *brass*

Ives Number	US3	US4	US10	US10B	US26	US26D
BHMA	605	606	612	613	625	626

Finishes *aluminum*

Ives Number	US28
BHMA	628

Meets ANSI/BHMA 156.16, L11241.

FS9 Floor Stop & Semi-Automatic Holder

- Semi-automatic floor-mounted holders accommodates with door to floor clearance of 1-1/2" or less.
- Cast from heavy-duty brass.
- Activate holder by flipping the engagement tongue forward. When door is opened, the hook (mounted on door) engages the tongue. To release, push firmly on door to disengage tongue.
- Universal screw pack accommodates all types of floor and door construction.

Dimensions

Overall Height: 3-1/2

Base Dimensions: 2" wide x 3-1/2" long

Finishes

Ives Number	US3	US4	US10	US10B	US26	US26D
BHMA	605	606	612	613	625	626

Meets ANSI/BHMA 156.16, L11301

FS40 FS41 FS42 FS43 Floor Stop & Automatic Holder

- Automatic door holders ideal for heavy-traffic situations that require a simple, fool-proof, Hold-Open device.
- Forged from brass.
- Unit is activated automatically when door is opened. A firm pull on door releases the mechanism.
- Strikes accommodate different door to floor clearances.
- Model numbers are determined by strike/door-to-floor clearances.
- Holder position on door is adjustable.
- Universal screw pack allows for installation in all types of door construction.

Dimensions

Door to Floor Clearance:	FS40	1/2" or less
	FS41	9/16" to 1-1/16"
	FS42	1-1/8" to 1-9/16"
	FS43	1-5/8" to 2-1/16"

Holder Dimensions: 3" Wide x 3-11/16" High

Finishes *brass*

Ives Number	US3	US4	US10	US10B	US26	US26D
BHMA	605	606	612	613	625	626

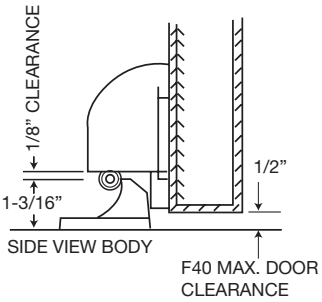

FS41

FS42

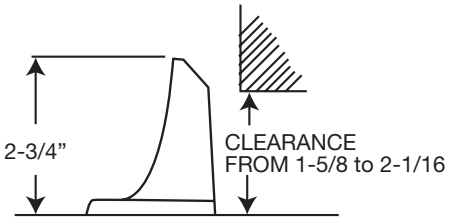

FS43

FS436
Meets ANSI/BHMA 156.16, L12141 for brass or bronze and L32141 for aluminum.

FS438
Meets ANSI/BHMA 156.16, L12141 for brass or bronze and L32141 for aluminum.

FS436 Dome Stop
FS438 Dome Stop

- FS436 for doors without threshold.
- FS438 for doors with threshold or undercut doors.
- Heavy-Duty Cast Dome Stops constructed of brass, bronze or aluminum.
- Packed with wood screw and plastic anchor.

Replaceable gray, non-marring rubber bumper.

Dimensions

FS436
Overall Height: 1"
Base Height: 3/16"
Base Diameter: 1-3/4" x 2" Oval

FS438
Overall Height: 1-3/8"
Base Height: 9/16"
Base Diameter: 1-3/4" x 2" Oval

Finishes *brass*

Ives Number	US3	US4	US5	US10	US10B	US15	US26	US26D	B716
BHMA	605	606	609	612	613	619	625	626	

Finishes *aluminum*

Ives Number	US28
BHMA	628

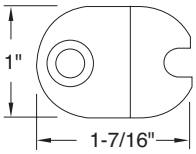

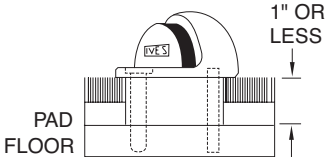

R435 Riser for FS436 Dome Stop
R437 Riser for FS438 Dome Stop

- Extruded aluminum, mill finish.
- R435 for conversion of FS436 Dome Stop to carpet installation.
- R437 For conversion of FS438 Dome Stop to carpet installation.
- Packed with wood screws, lead shield and stud.
  Specify Tampin (TPN) if required.

Dimensions

Available in 1/4", 3/8", 1/2", 5/8", 3/4" and 1" height.

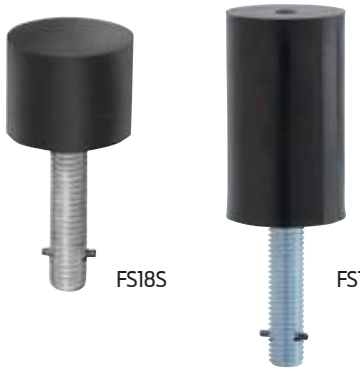

FS18S
FS18L Floor Stops

- Security Door Stops designed for use in high vandalism areas.
- Molded from black flame resistant, resilient material around a heavy-duty stud.
- Once grouted in concrete, leaves no exposed fasteners to be tampered with or removed.
- Ideal for jail or security cell areas where floor mounted stops are required.
- FS18L also ideal for concrete wall applications.

Dimensions

FS18S Height: 1-1/2"
FS18S Diameter: 2"
FS18S Stud Length: 2-1/2"

FS18L Height: 3-1/2"
FS18L Diameter: 2"
FS18L Stud Length: 2-1/2"

FS434 Floor Stop

- Burnished wrought steel.
- For undercut doors up to 1-1/2".
- Packed with screws and plastic anchors.
- Replaceable soft, resilient gray rubber.

Dimensions

Overall Height: 2-5/8"

Base Size: 1-1/2" W x 2-3/4" L

Finishes

Ives Number	USC
BHMA	604

430 Floor Door Stop

- Burnished wrought steel.
- For undercut doors up to 1-1/2".
- Packed with screws and plastic anchors.
- Replaceable soft, resilient gray rubber.

Dimensions

Overall Height: 1-5/16"

Base Diameter: 1-1/4"

Finishes *brass*

Ives Number	B3	B4	B5	B10B	B15	B26	B26D
BHMA	605	606	609	613	619	625	626

Finishes *aluminum*

Ives Number	A3*	A5	A14	A92
BHMA	666		669	673

** only available in Slim-Pak of 25*

WS401CCV & WS402CCV
Meets ANSI/BHMA 156.16 L12251 for brass

WS401CVX & WS402CVX
Meets ANSI/BHMA 156.16 L12101 for brass

WS401CVX Wall Bumpers
WS401CCV
WS402CVX
WS402CCV

- Constructed in heavy-duty cast brass.
- Special retainer cup makes rubber tamper resistant.

WS401CVX (401) – convex rubber bumper, packed with wood screw and plastic anchor.
WS401CCV (401-1/2) – concave rubber bumper which avoids damage to locks with projecting buttons, packed with wood screw and plastic anchor.
WS402CVX (402) – convex rubber bumper packed with screw and drywall anchor.
WS402CCV (402-1/2) – concave rubber bumper which avoids damage to locks with projecting buttons and is packed with screw and drywall anchor.

Dimensions

Base Diameter: 2-1/2"

Base Thickness: 3/8"

Overall Projection: 1"

Finishes

Ives Number	US3	US4	US10	US10B	US15	US26	US26D
BHMA	605	606	612	613	619	625	626

WS404CVX Wall Bumpers

- Compact size.
- Constructed in cast brass.
- Totally concealed mounting discourages vandalism or tampering.
- Unit furnished with grey convex rubber bumper.
- Packed with sheet metal screw, rawl plug and brad.

Dimensions

Base Diameter: 1"

Overall Projection: 17/32"

Finishes

Ives Number	US3	US4	US5	US10	US10B	US15	US26	US26D
BHMA	605	606	609	612	613	619	625	626

8400 Series Protection Plates

- Door protection plates are available in .050" thick brass, stainless steel or aluminum; and 1/8" thick high impact polyethylene in clear or black.
- Bevel edge options; specify B4E for all four edges.
- Mounting screw pack furnished standard, 16 screws per pack. Optional screw packs are available for TEK or TORK screw heads. Refer to the following chart for ordering.
- Specify NMH for no mounting holes. (Not available on 8402)
- Specify NMH-A for no mounting holes with adhesive. (Not available on 8402)
- Specify CS for counter sunk mounting holes.
- Specify ERS prepped with extra row of screws.

Kickplate Gasket Tape Tape is recommended when using a brass plate on a metal door to reduce tarnishing from electrolytic oxidation. One tape pack will cover an the perimeters of a 8" x 34" kickplate. Order 8401 Gasket Tape.

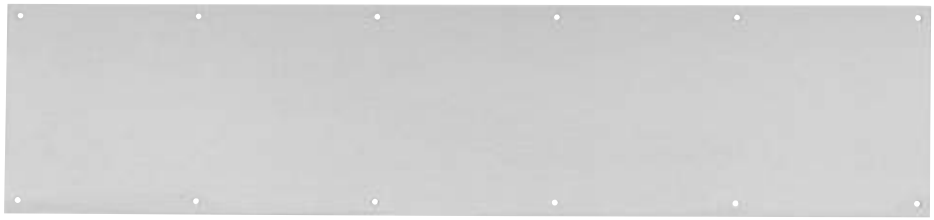

8400 Protection Plate
8402 (UL)* Protection Plate

**UL mark appears in upper right corner. Factory supplied screws must be used.*

Number of screw packs required by plate size (specify TEK Screws or TORK screws).

	22"-25"	26"-33"	34"-41"	42"-48"
4"-8"	1	1	1	1
9"-16"	1	1	1	1
17"-24"	1	1	1	2
25"-32"	1	1	2	2
33"-40"	1	2	2	2
41"-48"	2	2	2	2

Finishes *brass 24" x 48" max. size*

US Number	US3	US4	US10	US10B	US15	US26	US26D
BHMA	605	606	612	613	619	625	626

Finishes *stainless steel*

US Number	US32	US32D
BHMA	629	630

Finishes *aluminum*

US Number	US28
BHMA	628

Finishes *plastic*

Clear and Black

Residential Grade Kickplates available Carded only, finishes PA28, PA3, PA619, PA716, B3, B505, B619, B716

8400 Series Protection Plates

- Door protection plates are available in .050" thick brass, stainless steel or aluminum; and 1/8" thick high impact polyethylene in clear or black.
- Bevel edge options; specify B4E for all four edges.
- Mounting screw pack furnished standard, 16 screws per pack. Optional screw packs are available for TEK or TORK screw heads. Refer to the following chart for ordering.
- Specify NMH for no mounting holes. (Not available on 8402)
- Specify NMH-A for no mounting holes with adhesive. (Not available on 8402)
- Specify CS for counter sunk mounting holes.
- Specify ERS prepped with extra row of screws.

Kickplate Gasket Tape Tape is recommended when using a brass plate on a metal door to reduce tarnishing from electrolytic oxidation. One tape pack will cover an the perimeters of a 8" x 34" kickplate. Order 8401 Gasket Tape.

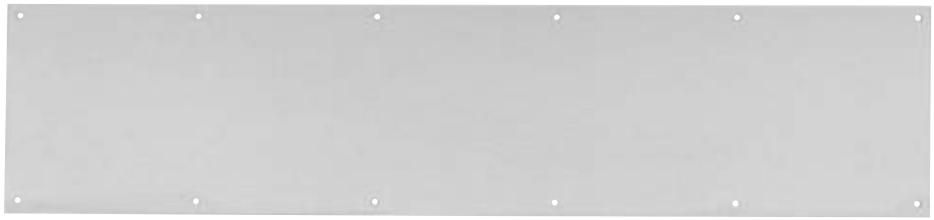

8400 Protection Plate
8402 (UL)* Protection Plate

**UL mark appears in upper right corner. Factory supplied screws must be used.*

Number of screw packs required by plate size (specify TEK Screws or TORK screws).

	22"-25"	26"-33"	34"-41"	42"-48"
4"-8"	1	1	1	1
9"-16"	1	1	1	1
17"-24"	1	1	1	2
25"-32"	1	1	2	2
33"-40"	1	2	2	2
41"-48"	2	2	2	2

Finishes *brass 24" x 48" max. size*

US Number	US3	US4	US10	US10B	US15	US26	US26D
BHMA	605	606	612	613	619	625	626

Finishes *stainless steel*

US Number	US32	US32D
BHMA	629	630

Finishes *aluminum*

US Number	US28
BHMA	628

Finishes *plastic*

Clear and Black

Residential Grade Kickplates available Carded only, finishes PA28, PA3, PA619, PA716, B3, B505, B619, B716

8200 Push Plate
8300 Pull Plate, Prep for Pull (less pull)

Available Sizes
3" x 12"
3.5" x 15"
4" x 16"
6" x 16"
8" x 16"
Special sizes are available. Consult factory.

Plates Cut for Cylinder or Thumbturns

Plates are available with cutout for cylinder or thumbturn; standard cutout is 2" from top and centered on plates up to 4" wide. For plates wider than 4" cutout is located 2" from outer edge, specify LH or RH. When pull location interferes with standard cutout location a detail drawing should be furnished with the order.

Standard cutout is 1-1/4" for cylinder and 3/8" for thumbturn.

Specify CFC for cutout for cylinder or CFT for cutout for thumbturn.

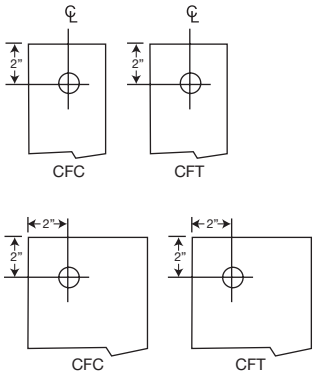

Finishes *brass*

US Number	US3	US4	US10	US10B	US15	US26	US26D*
BHMA	605	606	612	613	619	625	626

Finishes *stainless steel*

US Number	US32D*
BHMA	630

Finishes *aluminum*

US Number	US28
BHMA	628

** Available with Antimicrobial Coating, use suffix AM*

8302 Pull plate

Available mounting – Standard, F, G, H-I-L, or J see pages B15 and B16
Pulls have new heavy duty 5/16-18" mounting.

8300 Plate	**8102 Pull**
3-1/2" x 15"	6" centers
4" x 16"	8" centers
6" x 16"	10" centers

Finishes *brass*

US Number	US3	US4	US10	US10B	US26	US26D*
BHMA	605	606	612	613	625	626

Finishes *stainless steel*

US Number	US32D*
BHMA	630

Finishes *aluminum*

US Number	US28
BHMA	628

** Available with Antimicrobial Coating, use suffix AM*

8303 Pull plate

Available mounting – Standard, F, G, H-I-L, or J see pages B15 and B16
Pulls have new heavy duty 3/8-16" mounting.

8300 Plate	**8103 Pull**
3-1/2" x 15"	8" centers
4" x 16"	10" centers
6" x 16"	7" centers

Finishes *brass*

US Number	US3	US4	US10	US10B	US26	US26D*
BHMA	605	606	612	613	625	626

Finishes *stainless steel*

US Number	US32D*
BHMA	630

Finishes *aluminum*

US Number	US28
BHMA	628

** Available with Antimicrobial Coating, use suffix AM*

8305 Pull plate

Available mounting – Standard or F see page B15
Pulls have 1/4 - 20" mounting

8300 Plate	**8105 Pull**
3-1/2" x 15"	6" centers
4" x 16"	8" centers
6" x 16"	10" centers

Finishes *brass*

US Number	US3	US4	US10	US10B	US26	US26D
BHMA	605	606	612	613	625	626

Finishes *stainless steel*

US Number	US32D
BHMA	630

Finishes *aluminum*

US Number	US28
BHMA	628

** Available with Antimicrobial Coating, use suffix AM*

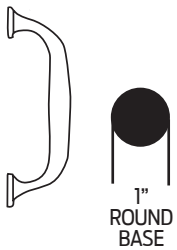

8311 Pull plate

Available mounting – Standard or F see page B15
Pulls have 1/4-20" mounting.

8300 Plate
3-1/2" x 15"
4" x 16"
6" x 16"

8111-5 Pull
5-1/8" centers

Finishes *brass*

US Number	US3	US4	US10	US10B	US26	US26D*
BHMA	605	606	612	613	625	626

Finishes *stainless steel*

US Number	US32D*
BHMA	630

Finishes *aluminum*

US Number	US28
BHMA	628

** Available with Antimicrobial Coating, use suffix AM*

9100 Series Push Bar and Pull Combinations

- Available in brass, stainless steel or aluminum.
- Standard fasteners furnished for 1-3/4" thick doors. Specify door thick if other than standard.
- Special lengths are available, contact customer service.

See page B17 for special mounting requirements.

Caution – the length of the pushbar should not interfere with the door jamb or cause a pinch point.

9100HD Push Bar

Available mounting – NO or NS see page B17
with heavy duty 3/8-16" mounting

Product No.	Projection	Clearance	Center to Center	Overall Length
9100-28	2-1/2"	1-1/2"	28"	29"
9100-33	2-1/2"	1-1/2"	33"	34"

Special lengths available, consult factory

Finishes *brass*

US Number	US3	US4	US10	US10B	US15	US26	US26D*
BHMA	605	606	612	613	619	625	626

Finishes *stainless steel*

US Number	US32	US32D*
BHMA	629	630

** Available with Antimicrobial Coating, use suffix AM*

LG11 Lock Guard

- Designed for use on aluminum doors with latch-type locks or doors equipped with electric strikes.
- Unit is Handed - Specify left or right hand when ordering.
- No exposed fasteners on face of unit.
- Unique design provides maximum security, virtually eliminating the opening between door and frame at latch point.
- Available in 13 Gauge Stainless Steel or 12 Gauge Steel.

Dimensions

2-1/2" Wide x 9-1/2" High

Stud center to center: 8-1/2"

Finishes

Ives Number	US32D	SP313
BHMA	630	695

LG12 Lock Guard

- Narrow design unit for use on rose or escutcheon 3-1/2" or less.
- For use with Type 86 Mortise and Type 161 Cylinder Locks (ANSI 156.13 Series 1000 and ANSI 156.2 Series 4000).
- No exposed fasteners on face of unit.
- Unique design provides maximum security, virtually eliminating the opening between door and frame at the latch point.
- Available in 13 Gauge Stainless Steel or 12 Gauge Steel

Dimensions

1-1/2" Wide x 9-1/2" High

Stud center to center: 8-1/2”

Finishes

Ives Number	USP	US32D
BHMA	600	630

Meets ANSI/BHMA 156.16, L03011.

SR64 Door Silencer

- For use on metal frames featuring pneumatic design that, once installed, forms an air pocket to absorb shock and reduce noise of door closing.
- Tamper-proof once installed on the frame.
- Proper installation also eliminates door rattle and provides constant tension for door latches or locks.

Packed in bags of 100.
Grey Available in bulk pack of 2500.
Each bag has an installation tool included.

Dimensions

Diameter: 1/2”

Thickness: 1/8”

Finishes

GRY, TAN

Meets ANSI/BHMA 156.16, L03021

SR65 Door Silencer

- For use on wood frames, also feature pneumatic design to cushion shock and absorb noise.
- To prevent removal, a small brad should be driven into stop strip and through stem of silencer, as shown in the detail.

Packed in bags of 100.

Dimensions

Height: 3/4”

Diameter: 3/8”

Thickness: 1/8”

Finishes

GRY

SR66 Door Silencer

- Self Adhesive Rubber Silencers.
- Economical installation requires no drilling of frames.

Packed two sheets of 50 (100 minimum).

Dimensions

Diameter: 1/2”

Thickness: 1/8”

Finishes

BRN, GRY, WHT

Utility Thresholds

Note: A = Aluminum B = Bronze
D = Dark Bronze Anodized STST = Stainless Steel

Thresholds can be ordered with E (Epoxy Abrasive), EL (Epoxy Abrasive Photoluminescent) or V3 (Full Body Strength) options.

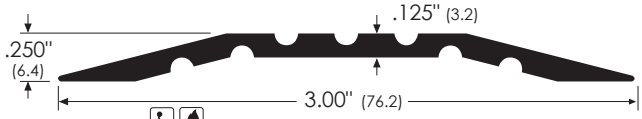

#63A
#64A **2.5" wide** (not shown)

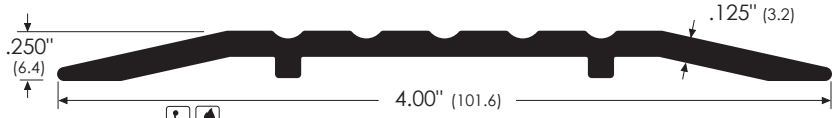

#544A

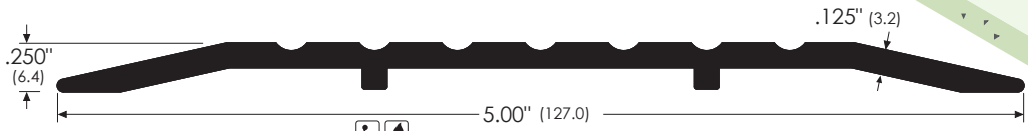

#545A #545B #545D

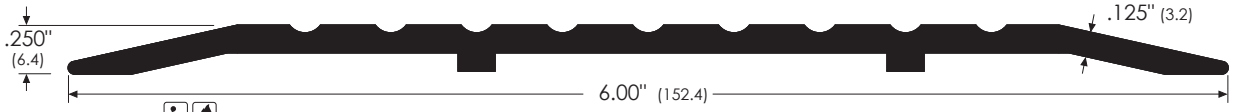

#546A

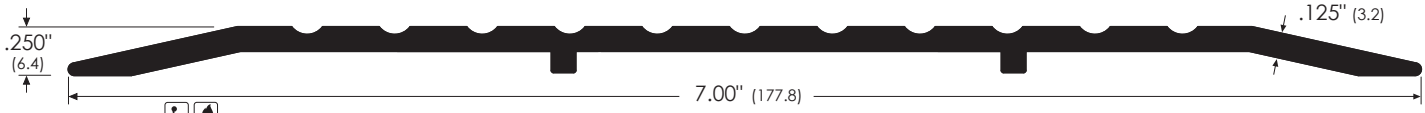

#547A

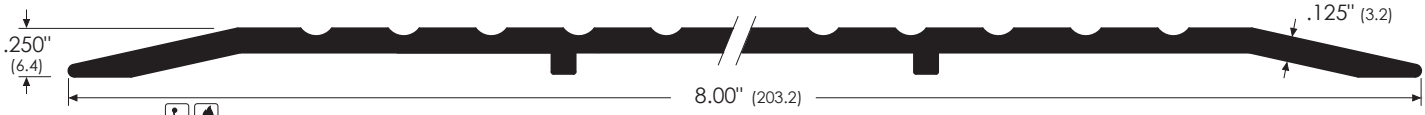

#548A

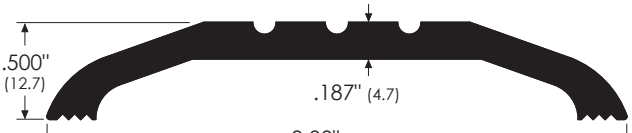

#653A

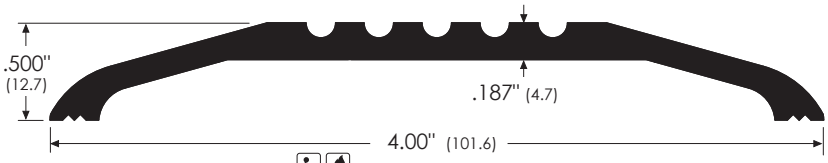

#654A #654B

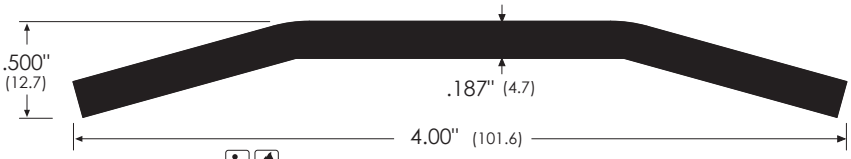

#164STST "E" abrasive surface is suggested for public access area

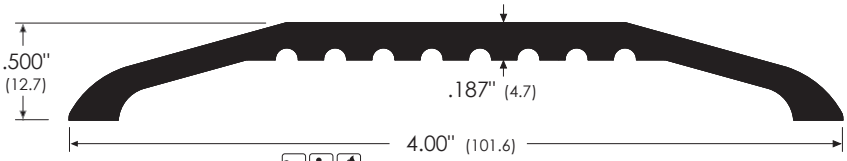

#164A #164B

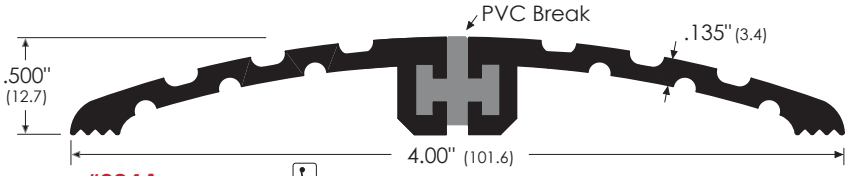

#624A Thermal Break

Suggested Installation For All Utility Thresholds

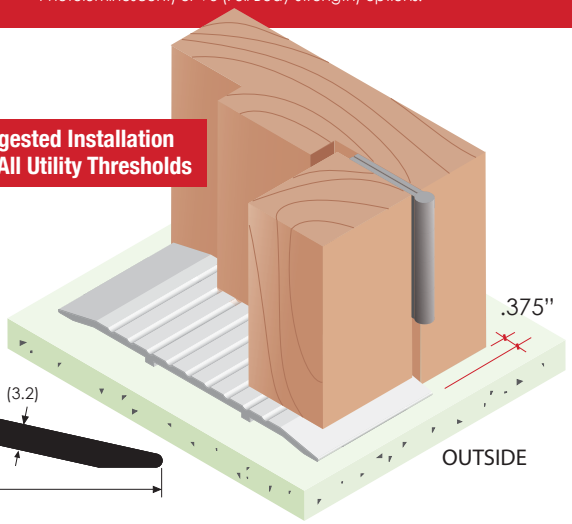

OPTIONS:

- **Non-Slip Epoxy Abrasive.** Thresholds can be ordered with non-slip epoxy abrasive particles bonded into the grooves. The tread provides a coefficient of friction of 1.02 dry and 0.98 wet to comply with ADA, OSHA and most local building code requirements. To order, add -E or -EL after the item number. Example : #657A-E or #657A-EL

EL- Epoxy Abrasive Photoluminescent **E - Epoxy Abrasive**

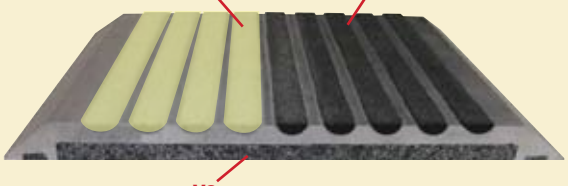

V3 - Full Body Strength

- **Full Body Strength.** An aluminum composite filler containing aluminum oxide and silicone carbide. Ideal applications include heavy commercial traffic in supply rooms, manufacturing buildings, schools, cafeterias, automobile dealers, hospitals, industrial facilities. To order, add -V3 after the item number. Example: #657A-V3

Utility Thresholds

Note: A = Aluminum B = Bronze
R = Rubber W = Oak
Thresholds can be ordered with E (Epoxy Abrasive), EL (Epoxy Abrasive Photoluminescent) or V3 (Full Body Strength) options.

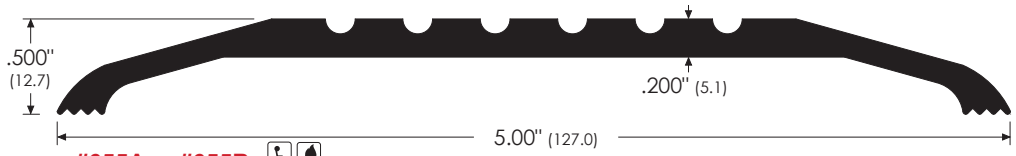

#655A #655B

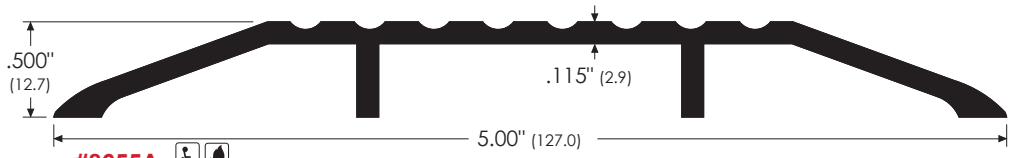

#8655A

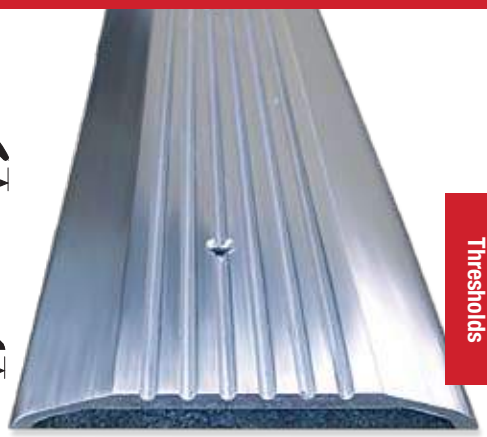

#655A-V3
Full Body Strength

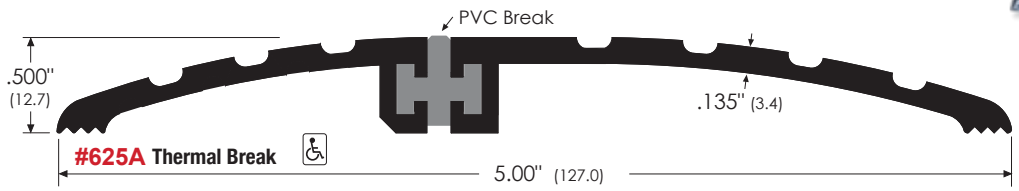

#625A Thermal Break

V3 (Full Body Strength option)

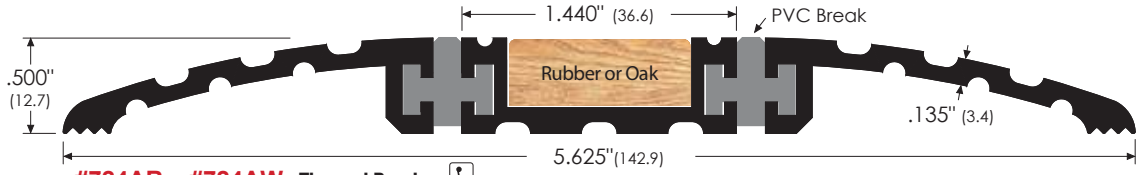

#724AR #724AW Thermal Break

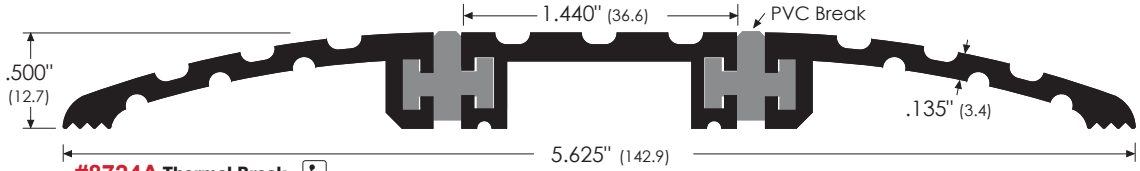

#8724A Thermal Break

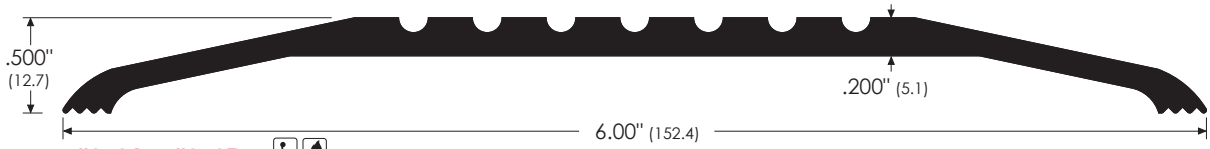

#656A #656B

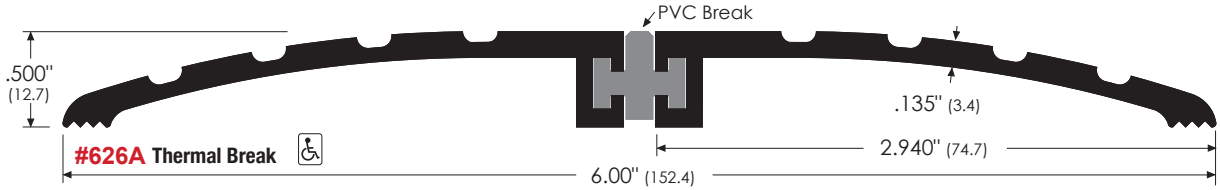

#626A Thermal Break

Which would you rather walk on or install?

Both pass the ANSI standard load test, but the ZERO threshold also passes the test of time and weight. The heavier-gauge material in our thresholds allows you to drill and screw right through and into concrete. Lighter-gauge thresholds can buckle and often loosen because screws cannot be tightened fully. Be sure you get the best....specify the heavier gauge when you need thresholds.

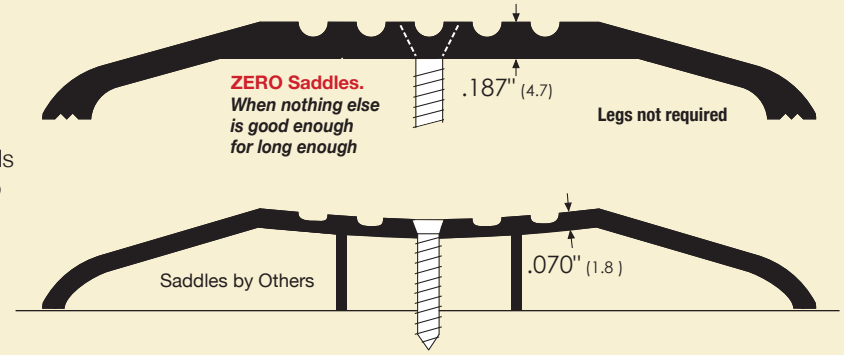

Carpet Divider and Thermal Break Threshold

Note: A = Aluminum B = Bronze
R = Rubber W = Oak
Thresholds can be ordered with E (Epoxy Abrasive), EL (Epoxy Abrasive Photoluminescent) or V3 (Full Body Strength) options.

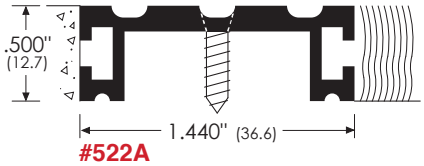

#522A

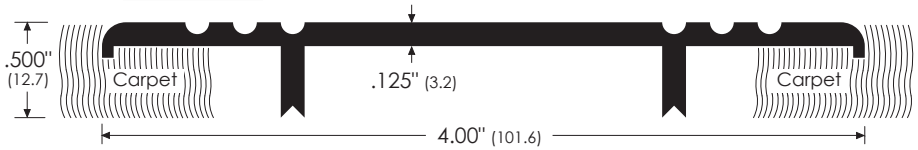

#1684A

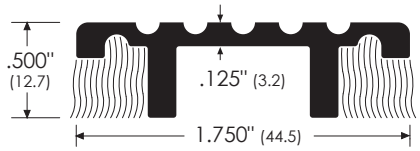

#1682A
#1682B

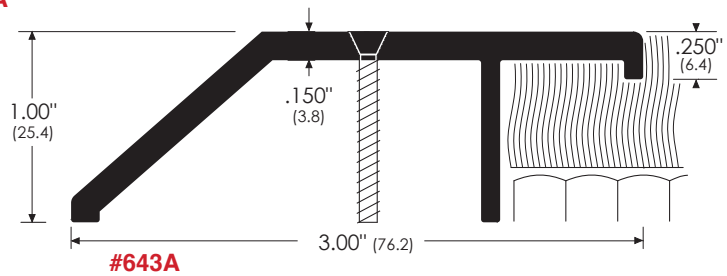

#643A

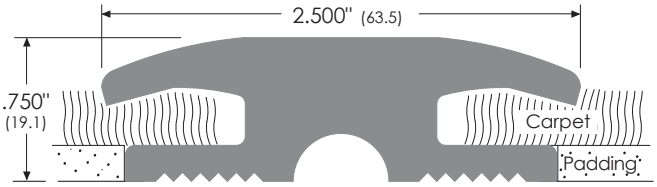

#1685R **Traction Tread™ Rubber** For non-rated door

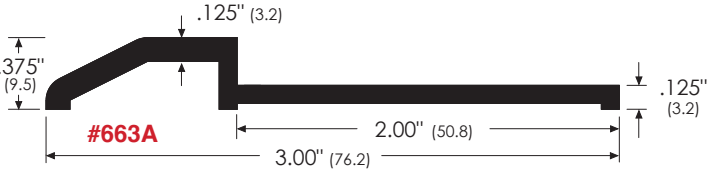

#663A

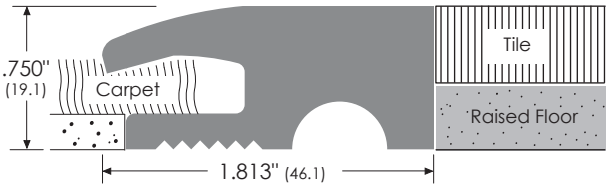

#1686R **Traction Tread™ Rubber**

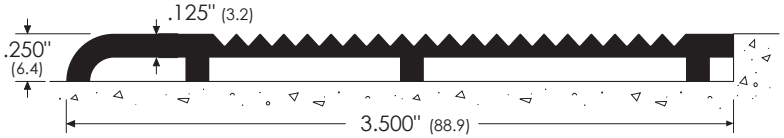

#239A

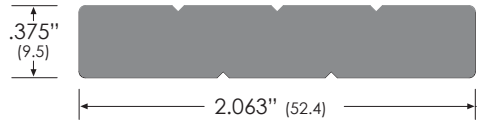

#6679R **RUBBER MAT Traction Tread™**

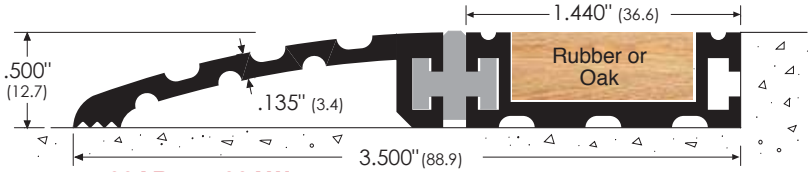

#722AR **#722AW** **Thermal Break**

Supplied with rubber or unfinished oak attached to part.

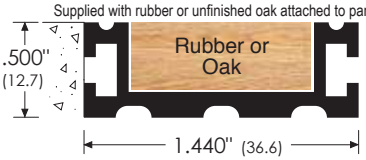

#522AR **#522AW**

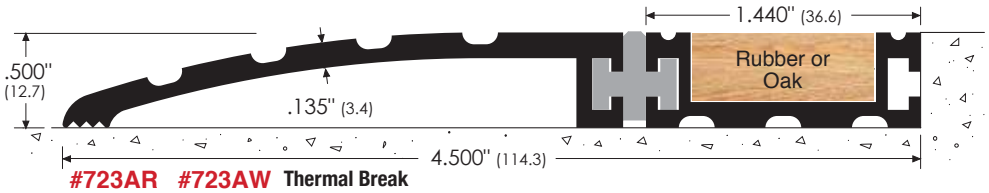

#723AR **#723AW** **Thermal Break**

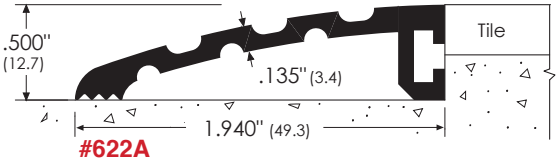

#622A

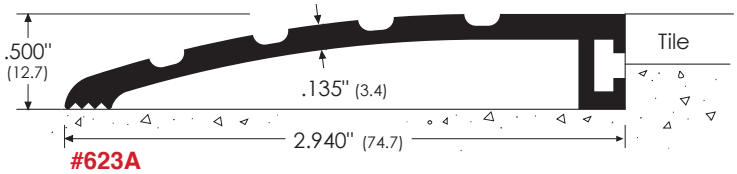

#623A

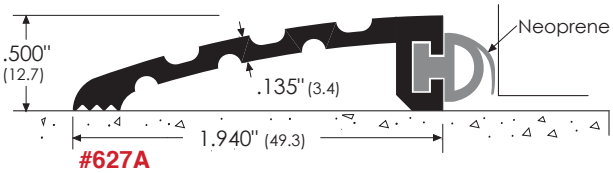

#627A

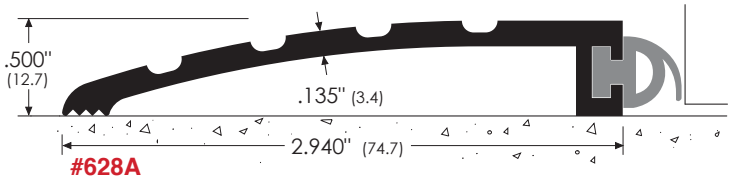

#628A

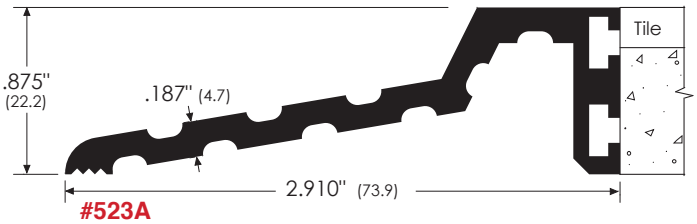

#523A

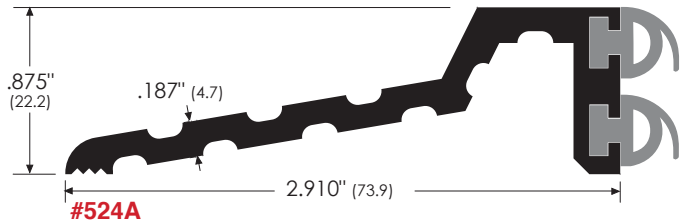

#524A

Sill Protection
Automatic Door Bottoms - Heavy Duty

Note: A = Aluminum, AA = Clear Anodized, D = Dark Bronze Anodized, G = Gold Anodized

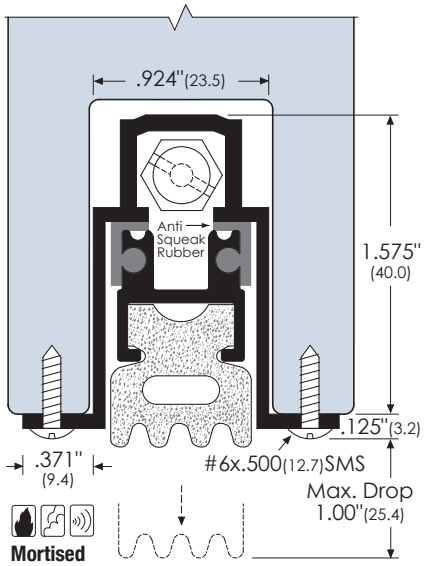

Mortised
#360AA

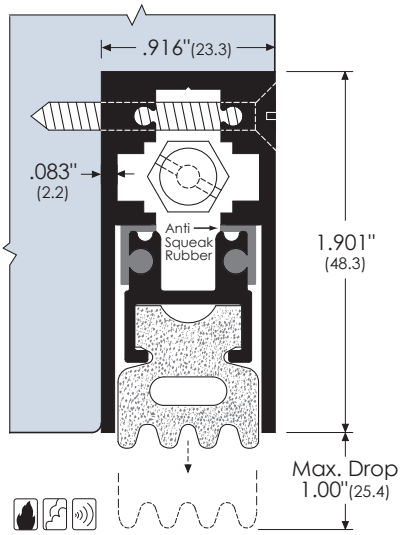

Semi-Mortised
#362AA #362D #362G

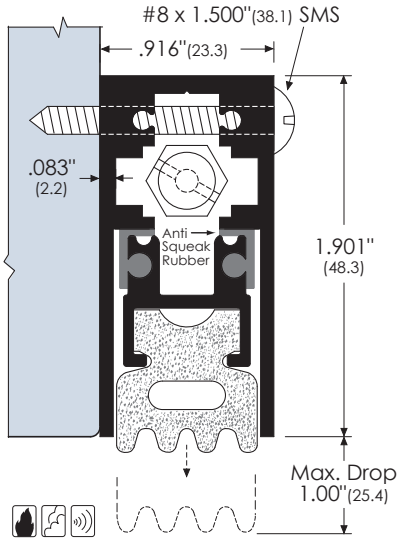

Surface-Mounted
#361AA #361D #361G

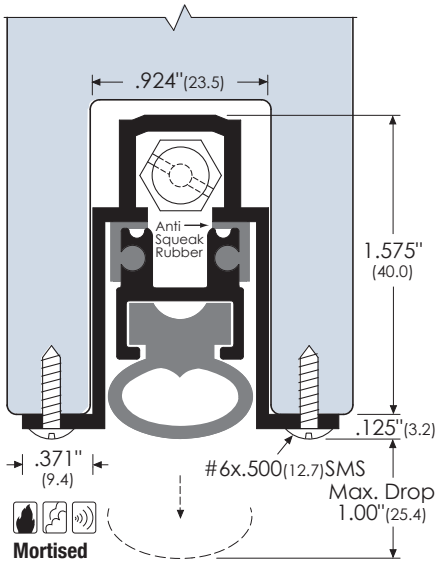

Mortised
#364AA

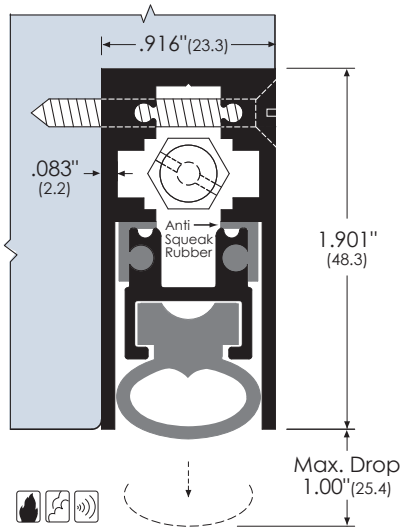

Semi-Mortised
#366AA #366D #366G

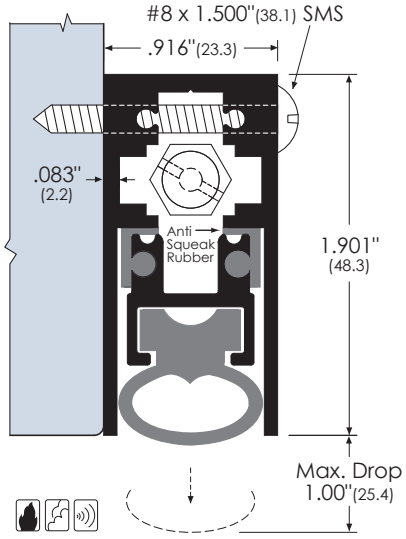

Surface-Mounted
#365AA #365D #365G

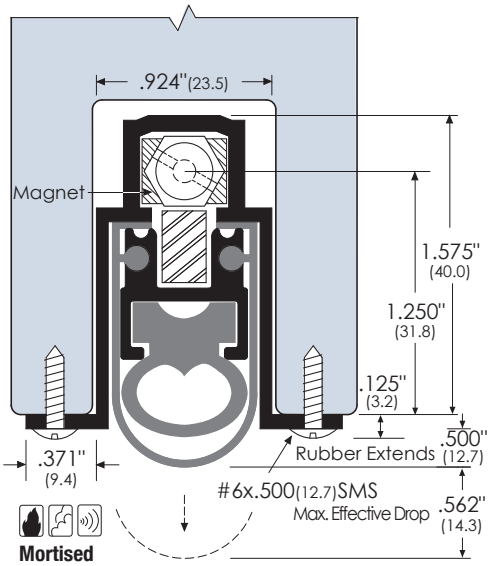

Mortised
#369AA

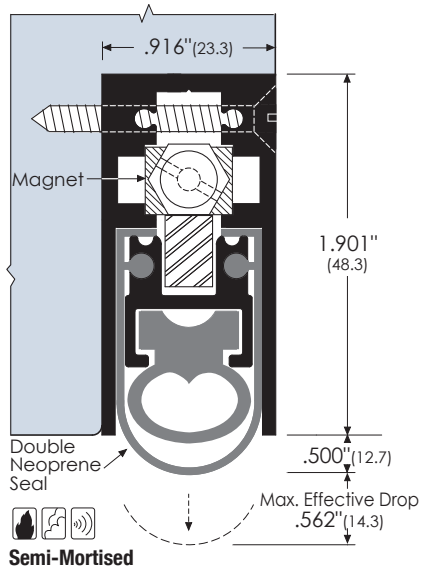

Semi-Mortised
#368AA #368D #368G

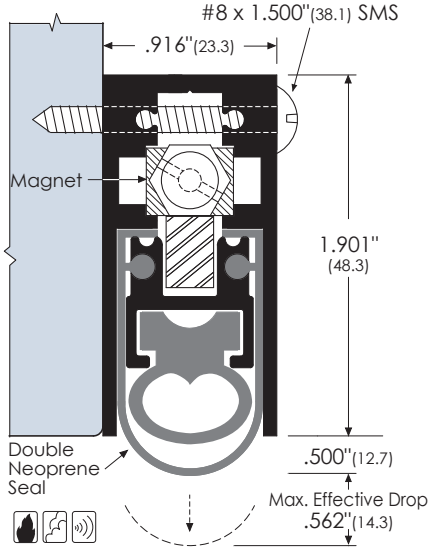

Surface-Mounted
#367AA #367D #367G

Sill Protection Sweeps

Note: A = Aluminum, AA = Clear Anodized, B = Bronze, D = Dark Bronze Anodized, G = Gold Anodized, PVC = Polyvinyl, clear

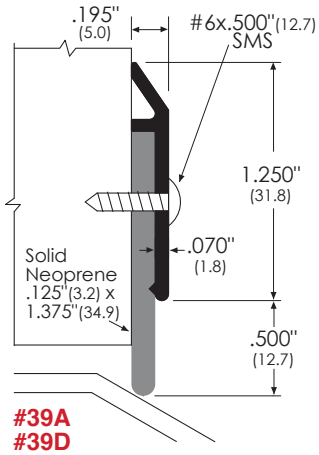

#39A
#39D

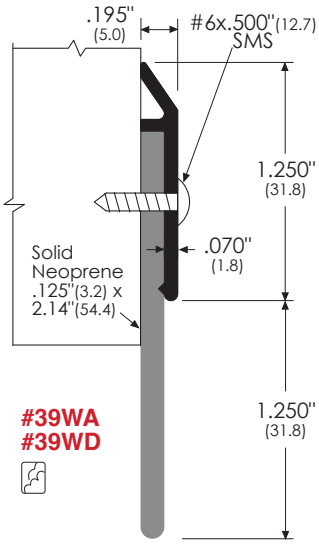

#39WA
#39WD

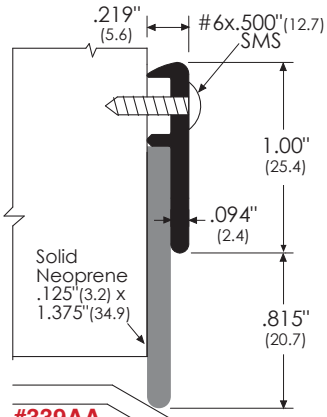

#339AA
#339B
#339D
#339G
#339PVC

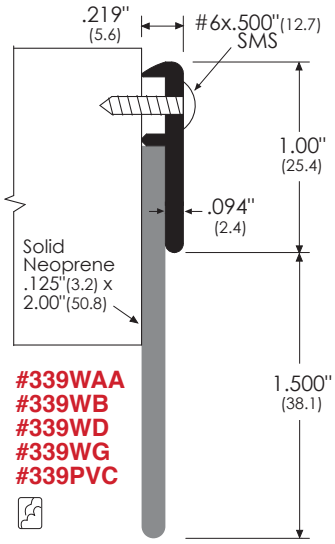

#339WAA
#339WB
#339WD
#339WG
#339PVC

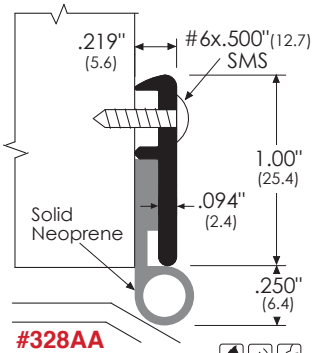

#328AA
#328B
#328D
#328G
#328PVC

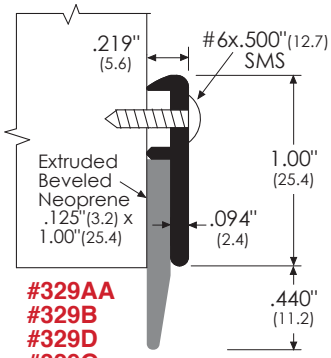

#329AA
#329B
#329D
#329G
#329PVC

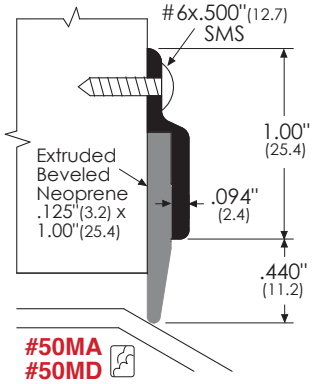

#50MA
#50MD

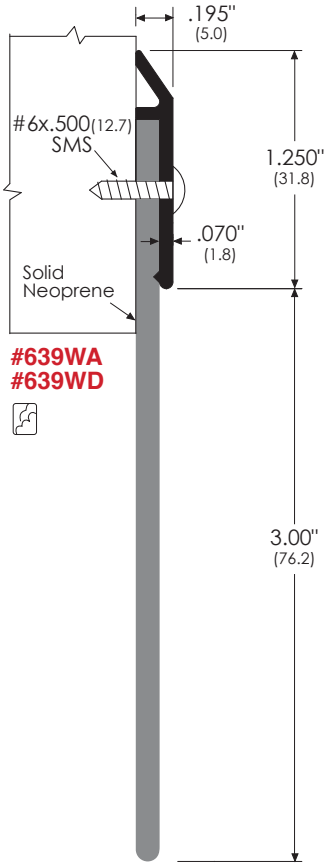

#639WA
#639WD

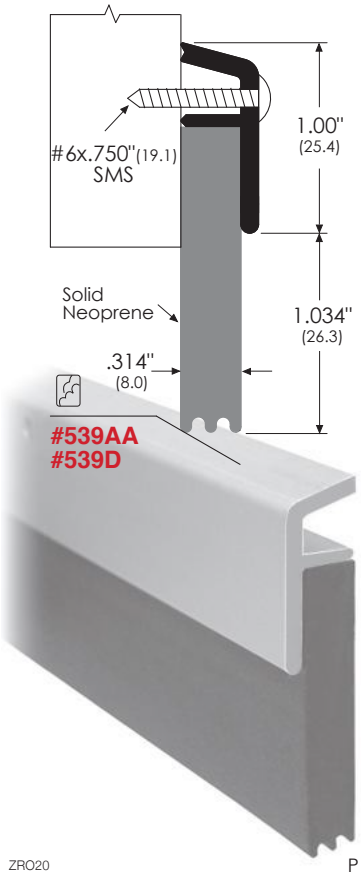

#539AA
#539D

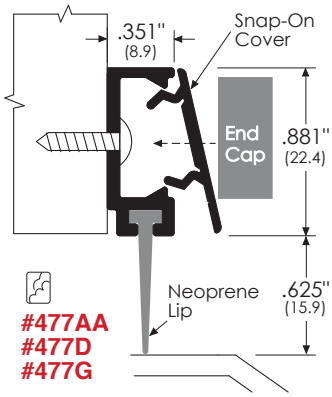

#477AA
#477D
#477G

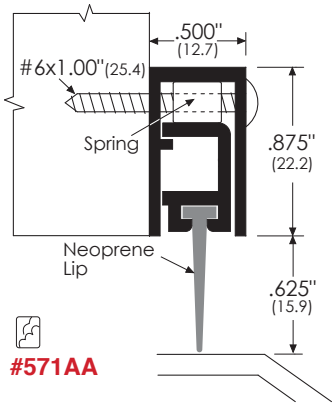

#571AA

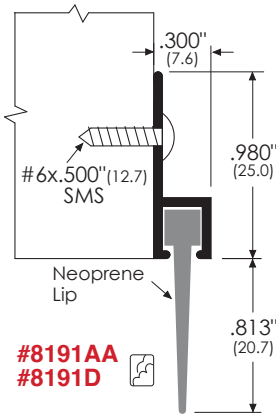

#8191AA
#8191D

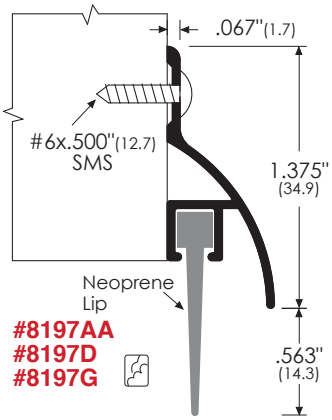

#8197AA
#8197D
#8197G

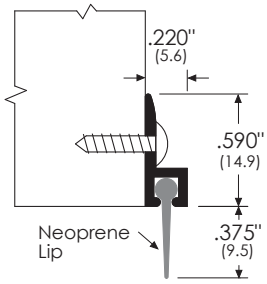

#8194AA
#8194D

Self-Adhesive Weatherstripping

Note:
N = Neoprene
S-Bk = Silicone, Black
S-Wh = Silicone, White
S-Br = Silicone, Brown
S-Cl = Silicone, Clear
S-Gy = Silicone, Grey
FS= Intumet™ Rubber
Y-Bk = Polyvinyl, Black
BIO = Antibacterial Gasketing, White
PSA* is equipped with 3M self-adhesive tape
All products are available with ZAG feature (Anti-Ligature)

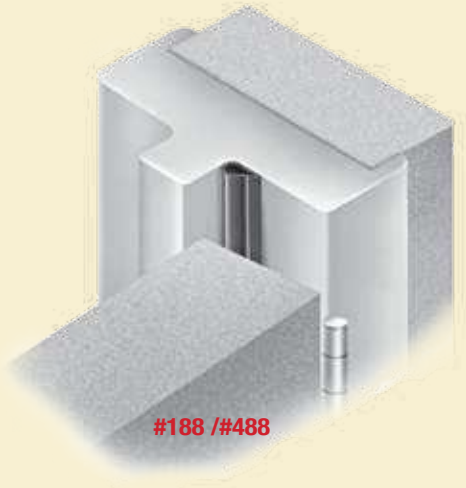
#188 /#488

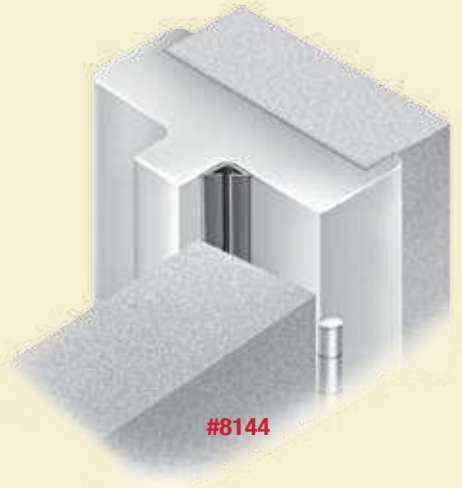
#8144

#8042

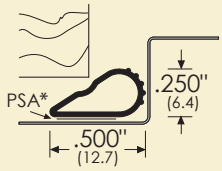

#188S-Bk #188S-Wh
#188S-Br #188FS
#188S-Cl #188BIO
#188S-Gy
ZERO Compress-O-Matic®

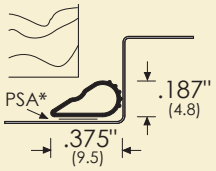

#488S-Bk #488S-Wh
#488S-Br #488FS
#488S-Cl #488BIO
#488S-Gy
ZERO Mini-Matic®

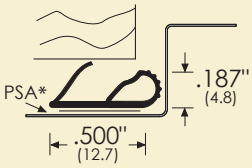

#8145S-Bk
ZERO Compress-O-Matic®

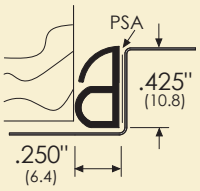

#824N

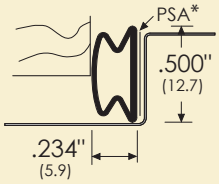

#8216S-Bk

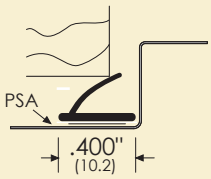

#117S-Bk

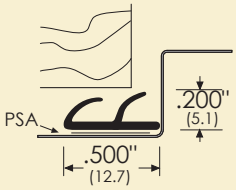

#8042S-Bk

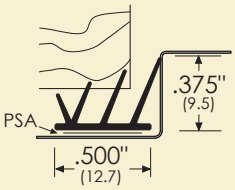

#8150S-Bk

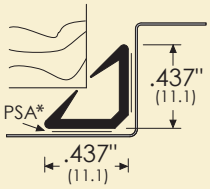

#8144S-Bk
#8144S-Wh
#8144 FS

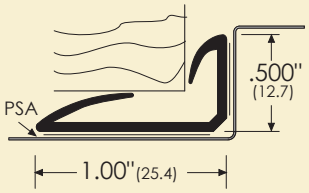

#8160Y-Bk

Closed Cell Sponge Neoprene

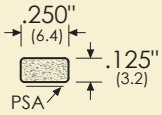

#8172N

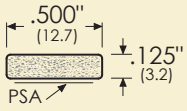

#8770N

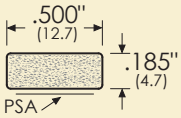

#312N

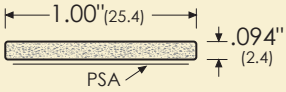

#8780N

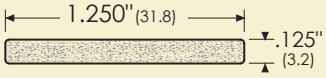

#139N

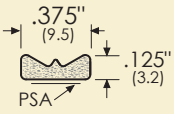

#826N

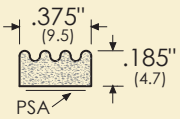

#926N

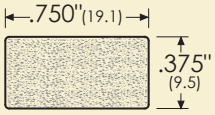

#318N

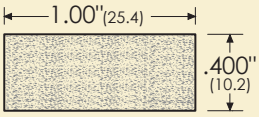

#3708N

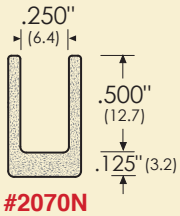

#2070N

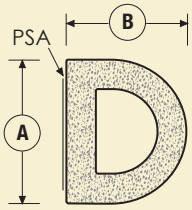

Part#	A	B
#810	.625" (15.9)	.625" (15.9)
#811	.750" (19.1)	.625" (15.9)
#812	1.00" (25.4)	.500" (12.7)
#813	1.250" (31.8)	.625" (15.9)

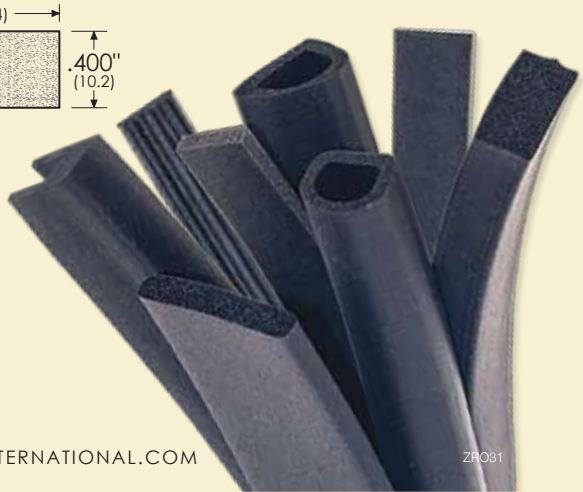

Door Seals

Note: A = Aluminum, B = Bronze, G = Gold Anodized, AA = Clear Anodized, D = Dr. Bronze Anodized

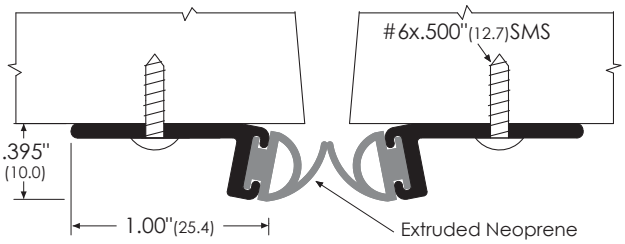

#99A
#99D

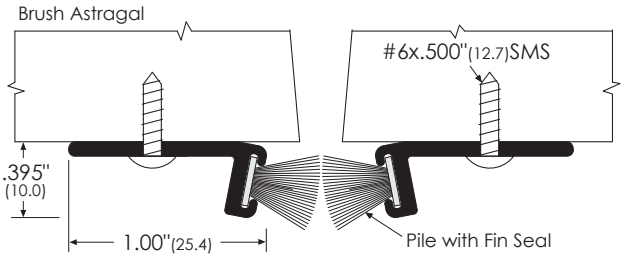

#98A
#98D

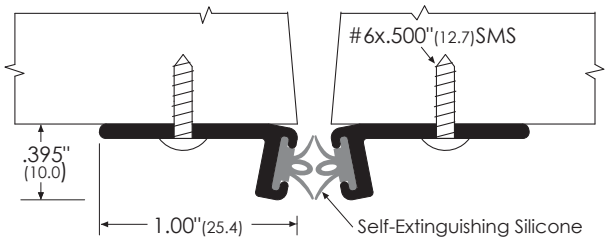

#100A
#100D

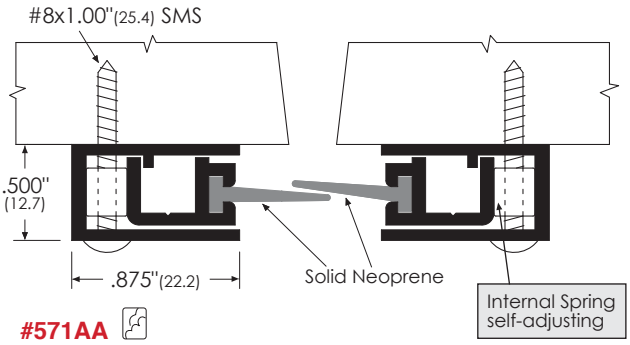

#571AA

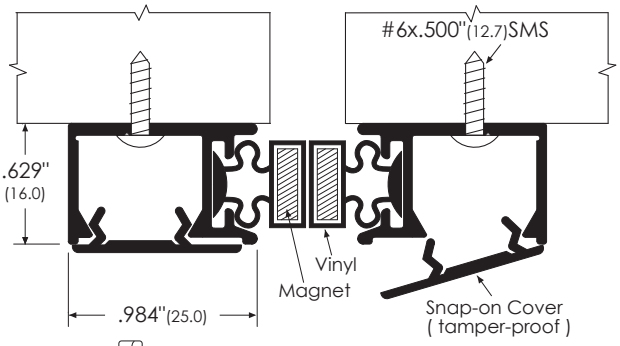

#375AA

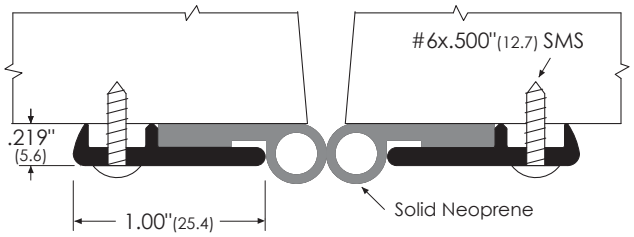

#328AA **#328D**
#328B **#328G**

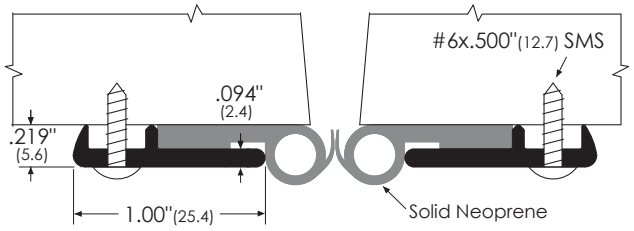

#326AA **#326D**
#326B **#326G**

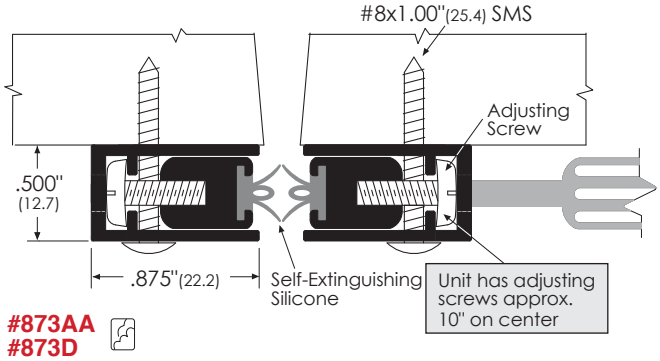

#873AA
#873D

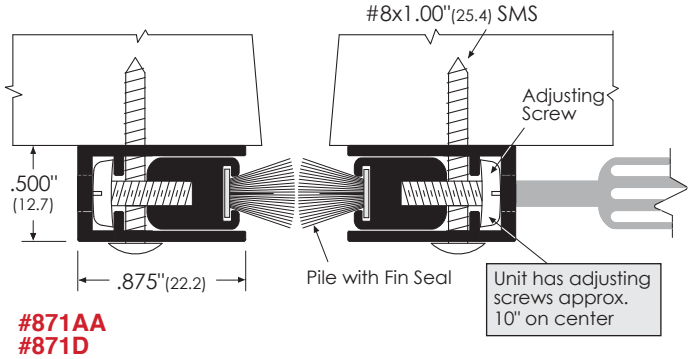

#871AA
#871D

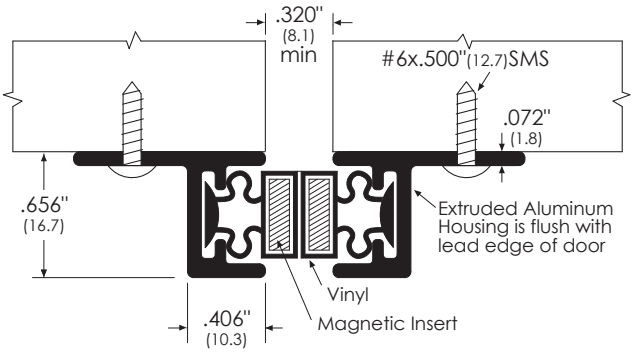

#370A
#370D

Note: A = Aluminum, B = Bronze, G = Gold Anodized, SP = Steel Prime, AA = Clear Anodized, D = Dark Bronze Anodized, STST = Stainless Steel, FS = INTUMET™ Rubber

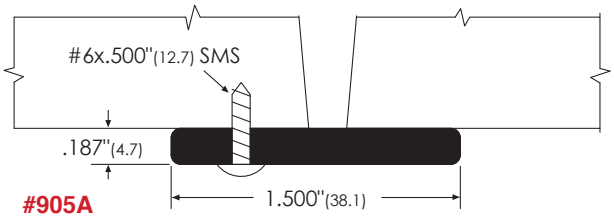

#905A

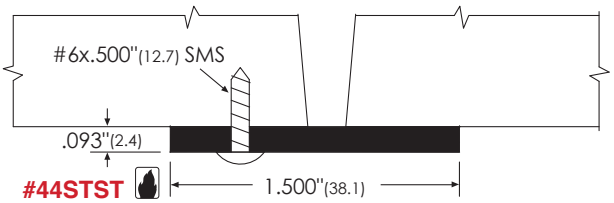

#44STST

#44XA **Lead Lined, unexposed. Aluminum 1.470" x .375"** (not shown)

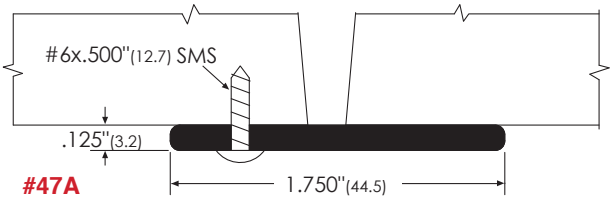

#47A

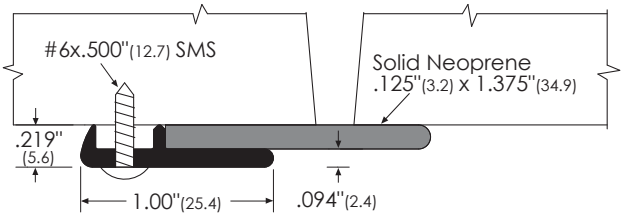

#339AA #339B #339D #339G

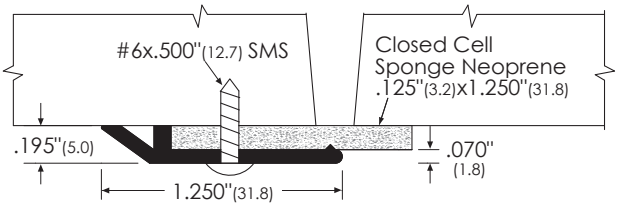

#139A #139D

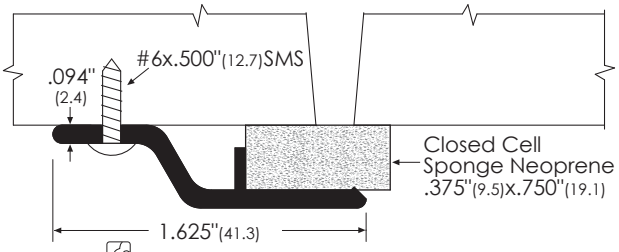

#140A

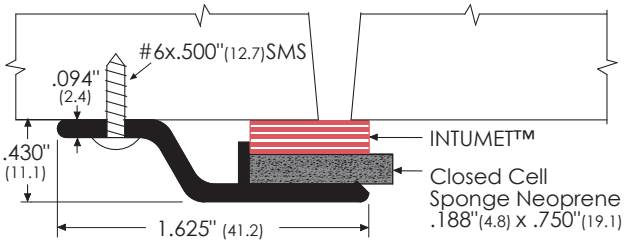

#140FS A

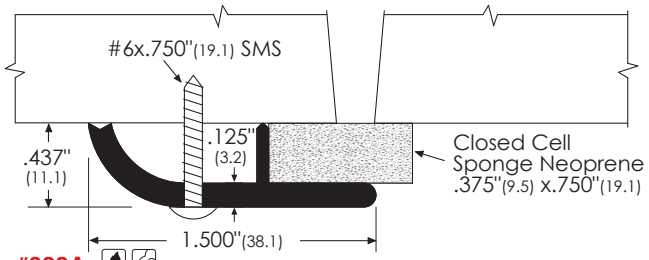

#322A

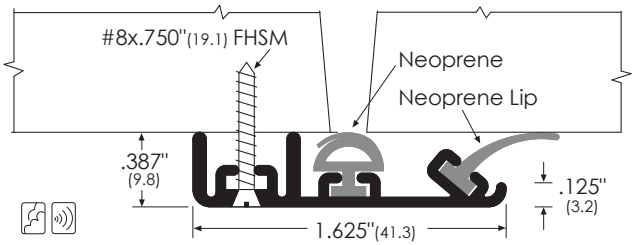

#383AA #383D

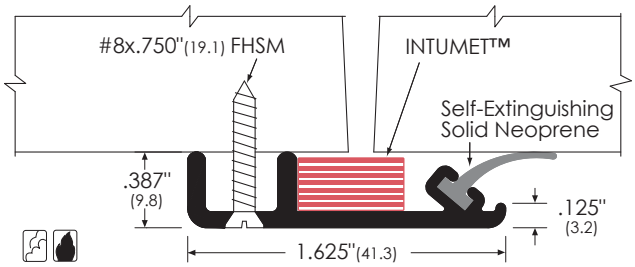

#383FS AA #383FS D

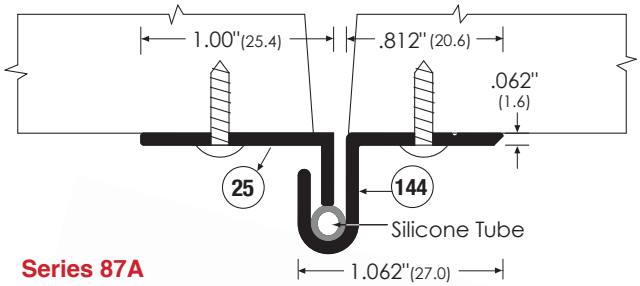

Series 87A

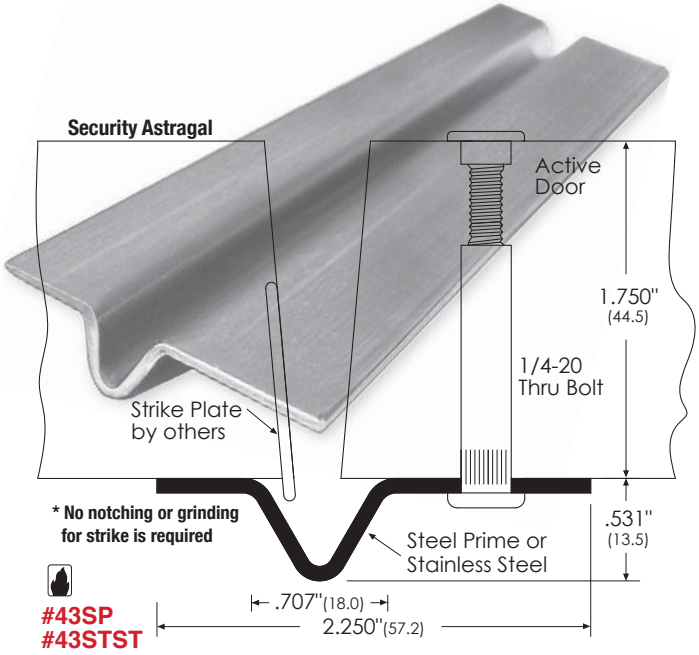

#43SP
#43STST

Note: A = Aluminum, B = Bronze, G = Gold Anodized, ZAG = Ligature-Resistant gasketing
AA = Clear Anodized, D = Dark Bronze Anodized, PVC = Polyvinyl, clear

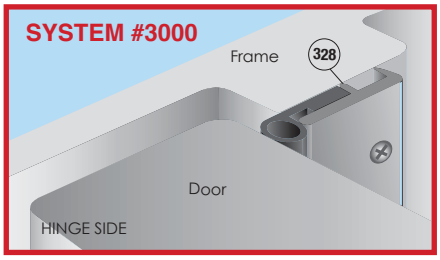

System #3000 consists of:
#328 (hinge side)
#326 (head & lock sides)

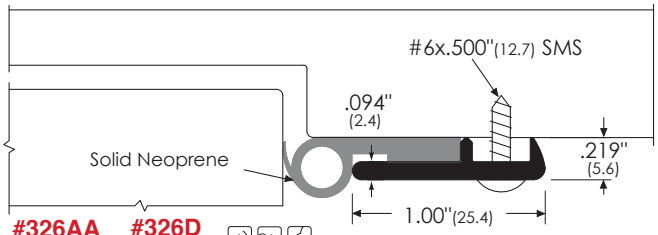

#326AA #326D
#326B #326G
#326PVC

ZERO Compress-O-Matic®
ZAG option available

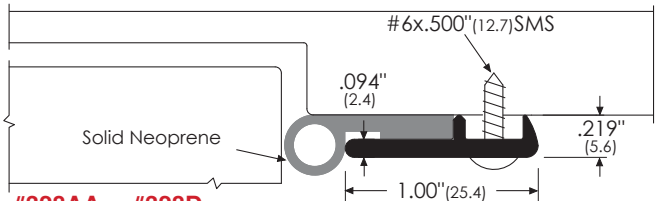

#328AA #328D
#328B #328G
#328PVC

ZERO Compress-O-Matic®
ZAG option available

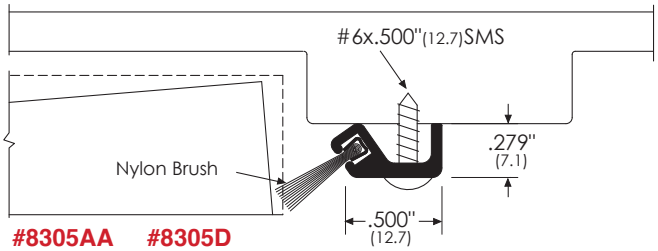

#8305AA #8305D

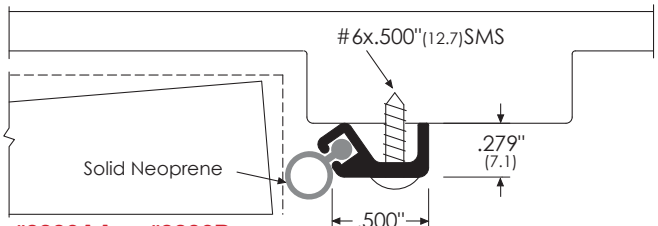

#8306AA #8306D
ZERO Mini-Matic

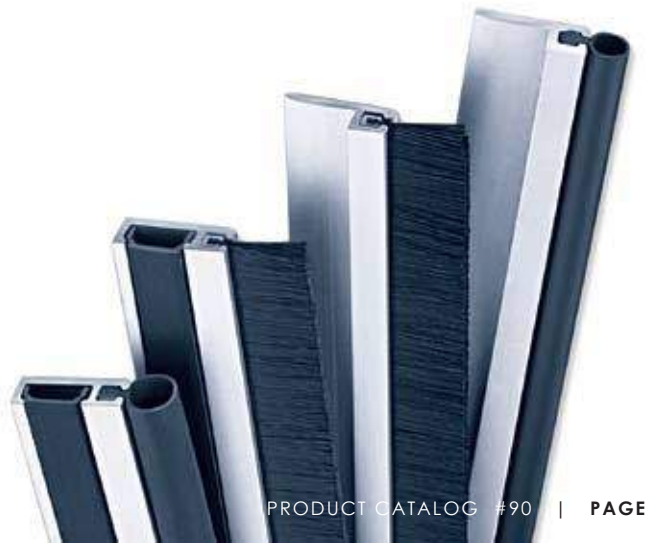

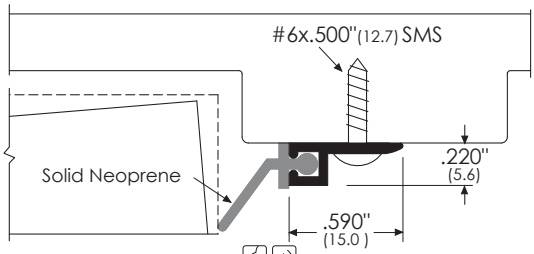

#8302AA #8302D

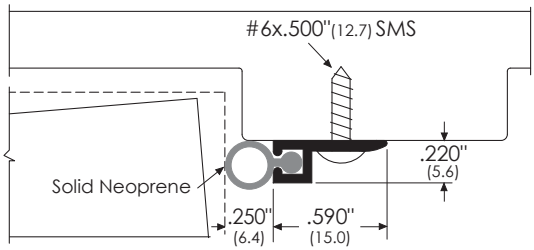

#8303AA #8303D
ZERO Mini-Matic

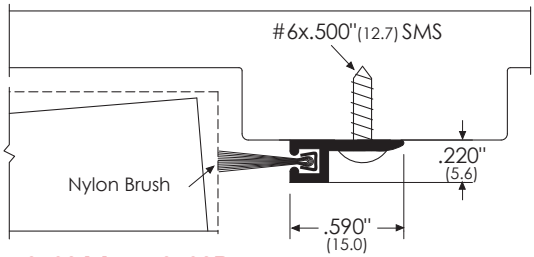

#8193AA #8193D

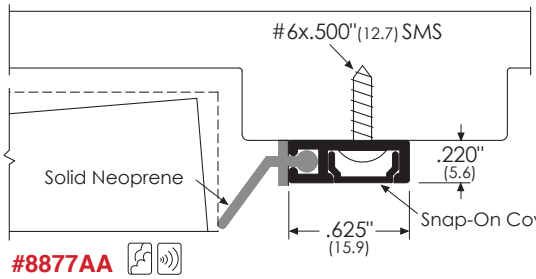

#8877AA

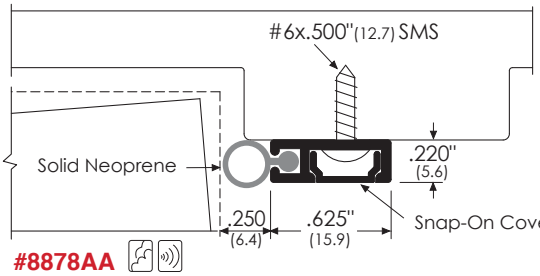

#8878AA
ZERO Mini-Matic

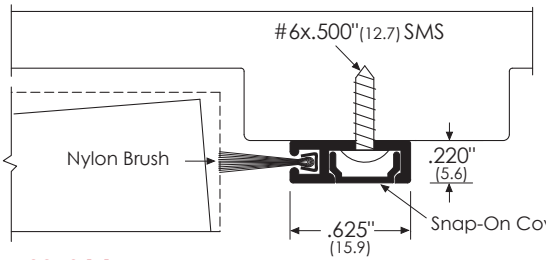

#8879AA

Note: A = Aluminum B= Bronze
D= Dark Bronze Anodized G= Gold Anodized
SP= Steel Primed

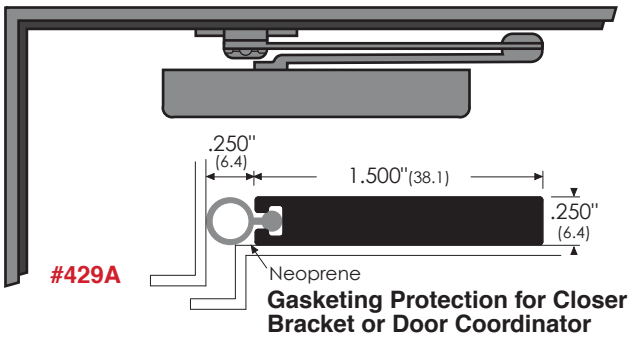

Gasketing Protection for Closer Bracket or Door Coordinator

STRIKE PLATE MOUNTING BRACKETS

(Custom sizes available upon request)

#328SPB #870SPB #770SPB

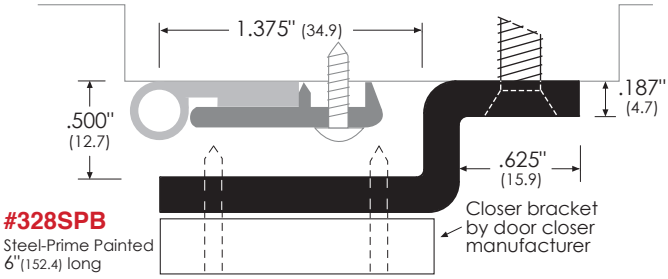

#328SPB
Steel-Prime Painted
6"(152.4) long

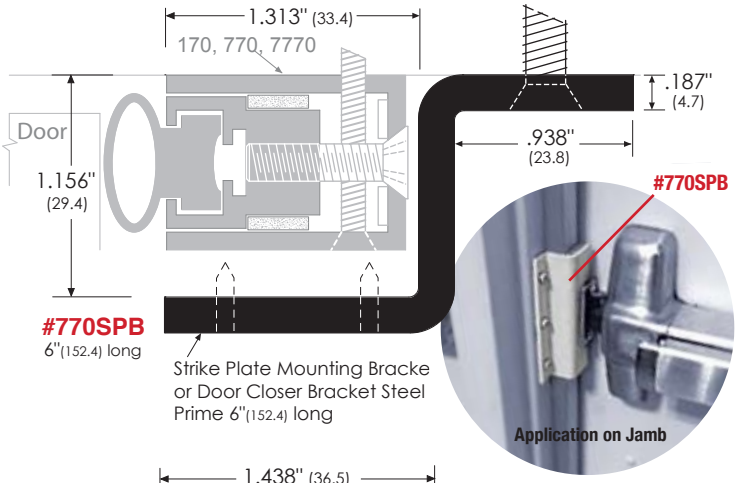

#770SPB
6"(152.4) long

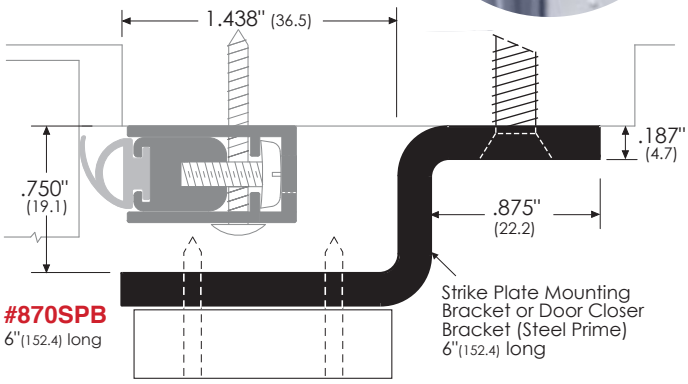

#870SPB
6"(152.4) long

Series 42A

Head and Lock-side Jamb

Security seal–when installed with tamper-proof fasteners (#7272ST).

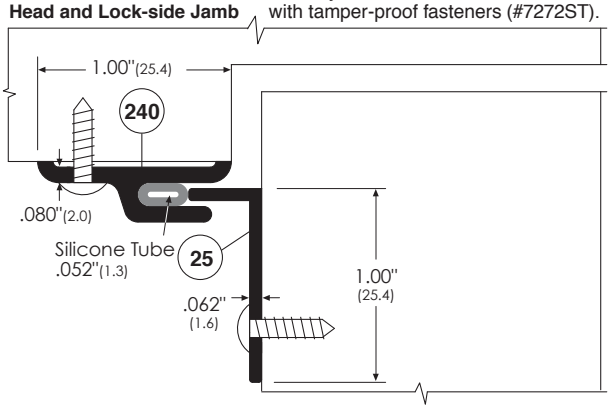

INTERLOCKING WATER SHED For Outswinging Doors

Series 148

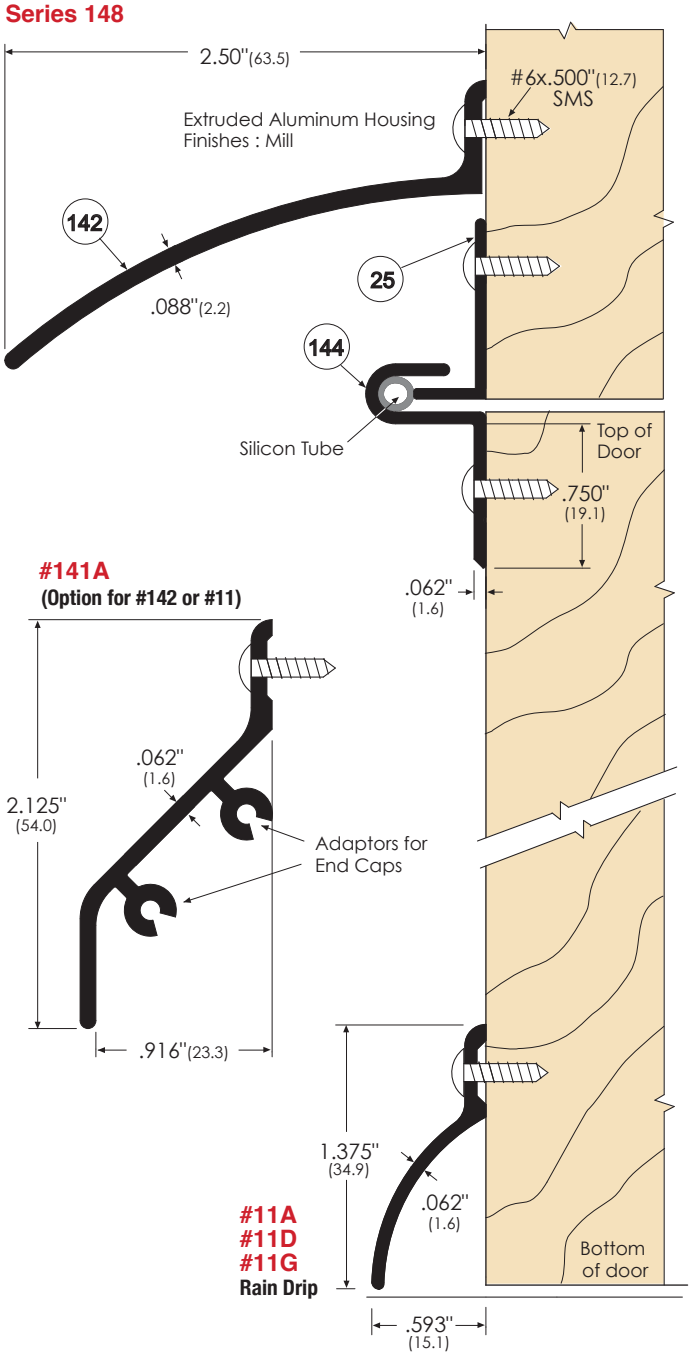

Specialty Head & Jamb

650 Series

Keyswitches

Overview

Schlage 650 Series keyswitches utilize an innovative magnetic spring design which allows installers to configure both clockwise and counterclockwise key turn direction as well as momentary or maintained action in seconds. Single gang and narrow stiles are available with numerous options which include heavy-duty plate, weather resistant cover (single gang size only), 2 LED lights – green/red, anti-tamper switch and Schlage Everest cylinder. in addition to the standard (626) satin chrome finish, there are five additional architectural finishes to choose from.

Features and benefits

- Easy to install and maintain
- Single gang and narrow stile offer ultimate flexibility
- Multiple options

Specifications

Standard keyswitch
- 5 amp@250 VAC
- Dual voltage
- SPDT contacts

ATS switch closes when cover is on 0.025A@28VDC

LED indicator lights operate at 12/24 VDC 0.025A@28VDC

Innovative magnetic spring technology allows installers to configure models in seconds

Momentary action

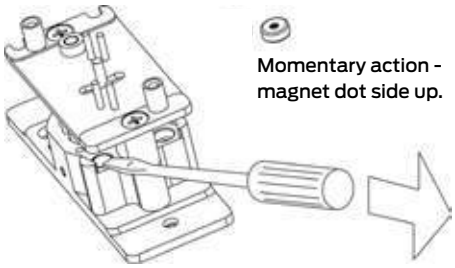

Maintained action

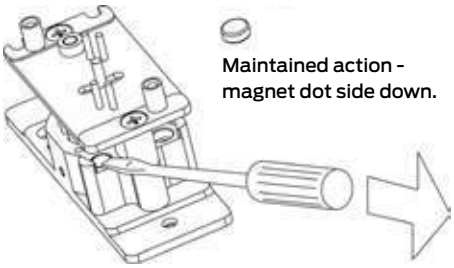

Ordering information

- **653-04** - SPDT maintained single direction
- **653-05** - SPDT momentary single direction
- **653-14** - DPDT maintained single direction
- **653-15** - DPDT momentary single direction
- **653-1414** - (2) DPDT maintained bi-direction
- **653-1415** - DPDT maintained x DPDT momentary
- **653-1515** - (2) DPDT momentary bi-direction
- **653-041** - SPDT maintained x key remove one position
- **653-0404** - (2) SPDT maintained bi-direction
- **653-0405** - SPDT maintained x SPDT momentary
- **653-141** - DPDT maintained x key remove one position
- **653-0505** - (2) SPDT momentary bi-direction

Options
- **L2** - 2 LEDs green and red, dual voltage
- **NS** - Narrow stile - stainless steel plate (1 3/4" x 4 1/2")
- **ATS** - Anti-tamper switch
- **HDP** - Heavy-duty plate 1/4" thick cast zinc (standard 626 satin chrome finish with anti-tamper plugs)
- **WP** - Weather-resistant cover fits 1 1/8" cylinder only (not available with NS and L2 options)
- **CYL** - 1 1/4" Schlage Everest® mortise cylinder and 1/8" spacer ring (keyed different)
- **CYL-KA** - 1 1/4" Schlage Everest mortise cylinder and 1/8" spacer ring (keyed alike)

Finish
- **SF-626** - Satin chrome (standard)
- **SF-605** - Bright brass
- **SF-612** - Satin bronze
- **SF-613** - Oil satin bronze
- **SF-625** - Bright chrome
- **SF-2** - Black powder coat

Note: 650 Series keyswitches operate with either a 1 1/8", 1 1/4", 1 3/8", or 1 1/2" cylinder having a straight type cam.

- 1 1/8" mortise cylinder fits direct in key switch - no blocking ring required.
- 1 1/4" cylinders require a 1/8" blocking/spacer ring, Schlage part number 36-079-012 or equivalent (included with the CYL and CYL-KA options).
- 1 3/8" mortise cylinder housing for SFIC cores - requires 1/4" blocking ring Schlage part number 36-079-025 or equivalent.
- 1 1/2" mortise cylinder housing for FSIC cores - requires 3/8" blocking ring Schlage part number 36-079-037 or equivalent.

All cylinders, except 1 1/4" as CYL or CYL-KA options, must be ordered separately.

Allegion, the Allegion logo, Schlage, and the Schlage logo are trademarks of Allegion plc, its subsidiaries and/or affiliates in the United States and other countries. All other trademarks are the property of their respective owners.

About Allegion

Allegion (NYSE: ALLE) creates peace of mind by pioneering safety and security. As a $2 billion provider of security solutions for homes and businesses, Allegion employs more than 7,800 people and sells products in more than 120 countries across the world. Allegion comprises 23 global brands, including strategic brands CISA®, Interflex®, LCN®, Schlage® and Von Duprin®. For more, visit **www.allegion.com.**

aptiQ ■ LCN ■ SCHLAGE ■ STEELCRAFT ■ VON DUPRIN

ALLEGION™

© 2014 Allegion
003907 Rev. 02/14
www.allegion.com/us

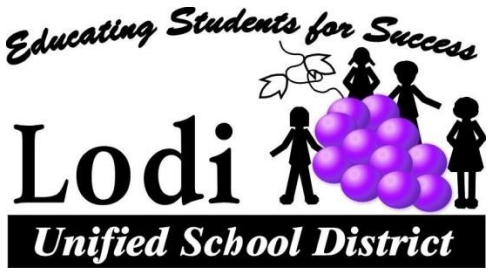

1305 E. Vine Street

Lodi, California 94513

(209) 953-8111

Telecommunications Specifications and
Installation Standards
Edited: 12-14-2017

Table of Contents

Part 1 – General 3

1.01 Introduction 3

1.02 Work Included 3

1.03 Contractor Qualifications 3

1.04 Requirements 4

1.05 Submittals and Substitutions 7

PART 2 – Products and Procedures 8

2.01 Approved LUSD Parts List 8

2.02 Labeling 8

2.03 Copper Backbone Cable 8

2.04 Wi-Fi Cable 9

2.05 Workstation Cable 9

2.06 Fiber Inner Duct 10

2.07 Fiber Distribution 10

2.08 Main Distribution Facility (MDF) 10

2.09 Intermediate Distribution Facility (IDF) 11

2.10 Backboard 11

2.11 Grounding and Bonding 12

2.12 Testing And Documentation 13

2.13 Acceptance 15

PART 3 – Execution 16

3.01 Division of Work 16

PART 4 – Conduit 16

4.01 Underground 16

4.02 Aboveground 16

4.03 Portable Classrooms 17

PART 5 – Concrete 17

PART 6 – Change Orders 17

PART 7 – Departure from Specifications 17

PART 8 – Asbestos and Lead Containing Paint Waiver 18

PART 9 – Access Control & Video Safety 18

9.01 Introduction 18
9.02 JAESC/Transportation/Warehouse Specific Guidelines 18
9.03 School Site Specific Guidelines 18
9.04 District Wide Guidelines 19
9.05 Documentation Guidelines 19
9.06 Power 20
9.07 Miscellaneous 20
PART 10 – A/V Projectors 20
10.01 Mounting Guidelines 21
10.02 Short Throw Projectors 21
10.03 Ceiling Mount Projectors 21
10.04 Promethean Boards 23
10.05 Multipurpose Rooms/Gyms 22
10.06 DSA Mounting Documentation 23
PART 11 – Intrusion Alarm 266
11.01 System 26
11.02 Telco Interconnect 266
11.03 Wiring 26
PART 12 – Enclosures 266

Part 1 – General

1.01 Introduction

The following specifications are intended to assist in the development of a telecommunications system for accommodating present and future technologies within the Lodi Unified School District. They provide a set of instructions and materials needed to install a telecommunications system within parameters set by industry standards. The requirements for the structured cabling systems within the facilities are continued in this document.

1.02 Work Included

- Contractor shall design and provide all materials in order to install a complete and functional data/telecommunications and cable television infrastructure.
- Only ONE Contractor shall be responsible for providing a complete and functional infrastructure, including necessary components and documentation.
- Documentation will include MS Visio drawings showing room drop locations, cable runs, and conduit pathways. Data, voice, and coax cables are all part of the same infrastructure and shall all be installed, terminated, labeled, and documented by only one contractor (no exceptions).

1.03 Contractor Qualifications

- Must be a Panduit Certified Installer and have an Anixter account in good standing.
- Must possess a valid C-7 California State contractor's license. This license must have been issued 2 years prior to the date of the bid. No other license classification is acceptable.
- Must be able to prove to the satisfaction of LUSD that they have significant experience in the installation of fiber optic systems.
    - Proper installation of fiber optic cable
    - Fiber termination
    - Interconnecting equipment
    - Test procedures with appropriate documentation.
- Must prove employees have been trained in the proper handling and cleanup of small quantities of lead paint. Contractor must contact Technology Services, prior to any work starting for an updated list of sites that require drilling work to be handled by a dedicated asbestos vendor. In the event Contractor encounters asbestos, stop work and notify district.
- Must be in trade of installing telecommunication systems, continuously, for a period of at least 3 years prior to the date of this bid.
- Must submit at least one project reference for each of the three years prior to the date of this bid.

- Must provide a minimum of 3 references supporting a claim of experience for a similar project within 2 years prior to this bid. These project references shall contain the starting and ending contract price, the project foreman or superintendent's name, and the name, address, and telephone number of a project contact.
- Must also provide a list of key installation personnel, their hire dates and a resume of their experience. Key installation personnel shall include at least one foreman and two journey level installers or technicians. By submitting the names of these personnel, contractor is committing them to the execution of the project outlined in this specification.

1.04 Requirements

Drawings and General Provisions of the contract, including General and Supplementary Conditions and Division 1 Specifications Sections shall apply to work specified, in this Section.

Rules and Regulations

All work and materials shall be in full accordance with the latest rules and regulations of the following:

- EIA/TIA Standards
- BICSI Standards
- NEC Standards
- Title 24 (California Code of Regulation)
- All Local Codes
- LUSD Standards
- NFPA Standards
- ADA Requirements
- Safety, Health and Environmental Standards

Permits, Fees, and Inspections

Contractor shall be responsible for all fees and permits required to any governmental agency having jurisdiction over the work of this section. Contractor shall arrange inspections required by any local ordinances during construction. Upon completion of the work, satisfactory evidence shall be furnished to LUSD to show that all work has been installed in accordance with the code(s).

Examination of Site

Contractor shall be held to have visited the site and been satisfied with the conditions under which the work is to be performed. Contractor shall check existing conditions that may affect the work. If the contractor retains services of other firms, those firms shall investigate existing systems and determine labor and other materials required to add devices or modify systems. No allowance shall subsequently be made on the contractor's behalf, for any extra expense resulting from a failure or neglect to discover conditions affecting the work.

Cleaning and Cleanup

All work areas shall be cleaned to remove all dust, dirt, grease, paint, or other marks. All electrical equipment shall be left in a clean condition inside and out, satisfactory to LUSD. Buildings and premises will be kept free from accumulated waste materials, rubbish and debris resulting from work. Upon completion of work: tools, appliances, surplus and waste materials, rubbish and/or debris will be removed and/or legally disposed of offsite.

Interruption of Services

- The underground route may run through areas of existing underground irrigation, signal, power, gas, water and sewer.
- Contractor must take precautions to avoid damaging/killing the root systems of existing trees. Contractor shall hand-dig as necessary to prevent disruption to existing systems, and make all repairs as required if damage occurred, at no additional cost to LUSD.
- LUSD will make every effort to assist contractor in locating existing underground routes. However, contractor will be required to pothole and inspect as needed. Contractor is responsible for USA surveys (Underground Service Alert).
- Power and signal services to existing buildings and related circuits are to remain in operation and shall not be interrupted, except by specific written approval from LUSD.
- If it is deemed necessary to shutdown circuits for the installation of new work, such shutdowns shall be scheduled with LUSD who may at its choosing, have a representative present during shutdown. Shutdowns shall be scheduled "after hours" or on weekends when an interruption would not cause a disturbance to school activities. Any accidental interruption of service to circuits or equipment as a result of work performed by the contractor shall be restored immediately in a manner acceptable to LUSD, at the contractor's expense.

Cooperation and Coordination

Contractor shall be solely responsible for instituting and maintaining safe working conditions for the project area under construction. Noise, dust, and other nuisance control measures will be implemented as effectively as possible. Work will be executed at a time when the space required by this installation is accessible. Adequate barrier and trench covers will be provided, and no equipment will be left unattended, ensuring the safety of students and staff.

Inspection

Contractor shall cooperate with the LUSD Designer/Inspector and provide assistance at all times for inspection of the work performed under this contract. Work that will be contained behind or under access covers, ground covering, or similar impediments shall be left exposed until inspected by LUSD. Contractor shall remove covers, operate devices, or perform any reasonable work that, in the opinion of LUSD, will be necessary to determine the quality and adequacy of the work.

Manufacturers Direction

Contractor shall follow manufacturer's directions that cover points not included in the drawings or specifications.

Workmanship

Contractor shall take all precautions necessary to protect existing structures. Structures or items to remain that are damaged during the course of work, shall be repaired or replaced by the contractor. Good workmanship shall be evident by the proper installation of all materials and equipment. Equipment shall be level, plumb and true with the structure and other equipment. All materials shall be firmly secured in place, adequately supported and permanent.

Contractor's Supervision

Contractor shall personally, or through an authorized and competent representative, constantly supervise the work from its commencement to its completion and acceptance. Contractor shall have the same foreman and workers on the job from its commencement to it completion, as much as possible. LUSD shall be notified of any personnel changes and supplied with the proper documents for any new personnel (I.e. lead certificates). All non-LUSD personnel shall be identified either by an ID tag or uniform with a company logo when on school grounds.

Scheduling of Work

Due to its nature, this work will have to proceed with a definite sequence of operations to minimize outages and continue facilities to all areas. The site will remain in operation during the work, and the contractor shall make every effort to maintain required services.

Guarantees

- Acceptance of the contract for this work includes this guarantee: Contractor guarantees that he has performed the work in accordance with the contract documents. Contractor also agrees to replace or repair, as new, any defective work, materials, or parts which appears within 4 years of final payment. LUSD will make the final determination of whether any defects are the responsibility of the contractor to replace or repair.
- Warranties, guarantees and certificates shall be provided for equipment and materials furnished and installed, as of the date of final payment and be delivered to LUSD. A set of "As Built" Visio drawings and test results for all installed cabling shall be provided to LUSD, before the project will be considered complete.
- Panduit Pan-Net Performance Guarantee - Contractor shall provide a 25 year application performance warranty for all Panduit Pan-Net copper cable and connectivity products. The system must be installed to meet all TIA/EIA commercial building wiring standards and installed per appropriate Panduit instruction sheets. If any Panduit product fails to perform as stated above, Panduit will provide new components at no charge.

1.05 Submittals and Substitutions

LUSD has evaluated and approved all the approved items listed in the LUSD Parts List. Substitutions to this list are possible but must be approved before a bid is accepted. Substitutions must be submitted to LUSD 10 working days before a bid is due and will either be approved or rejected 5 working days before a bid is due. The substitution documentation shall include the comparative specification listing for the approved product and the proposed product, including a complete listing of the characteristics of the equipment in the specification.

Within 10 working days after the date of the award of the contract, contractor shall submit to 3 copies of a complete submission to LUSD for review. The submission shall consist of 5 major sections, with each section separated with index tabs:

1. Section 1 shall be the Index, which will include the project title, address, name of the firm submitting the proposal and name of the architect. Each page in the submission shall be numbered chronologically and summarized in the index.
2. Section 2 shall include a copy of the contractor's valid C-7 California State Contractor's License, documentation outlined in Section 1.02 and a list of instrumentation to be used for system testing.
3. Section 3 shall contain the pre-approved substitution submittal and the written approval from LUSD. If no substitutions are planned, it will be noted in this section as well.
4. Section 4 shall contain samples of proposed cable markers and labeling.
5. Section 5 shall contain a complete and detailed satellite cable count, workstation count, bill-of-materials and Visio drawing showing proposed work ("As Planned"). Any contractor failing to include all of the required information shall be deemed non-responsive and may be disqualified, at the discretion of LUSD.

PART 2 – Products and Procedures

2.01 Approved LUSD Parts List

An approved parts list is detailed in "Enclosure C" of this document. Preferred education pricing provided for this list is available through Anixter Inc. (1-800-ANIXTER, reference Lodi Unified).

All products must be selected from the "LUSD Parts List," unless substitutions have been approved by LUSD.

2.02 Labeling

- Shall follow the "LUSD Labeling Format" specified in Enclosure B, with the exception of workstation cables (i.e. patch cords).
- Shall never be hand-written.
- Shall be machine printed on clear or opaque tape, stenciled onto adhesive labels, or type written onto adhesive labels.
- Shall have font that is at least 1/8" in height, block characters, and legible.
- Shall have text that is of a color contrasting with the label so that it may be easily read. If labeling tape is utilized, the font color shall contrast with the background.
- Patch panels shall exhibit workstation numbers, in a sequential order, for all workstations served by the MDF or IDF.
- Shall be completed before testing commences. Labeling discrepencies found during inspection will void all test results.

2.03 Copper Backbone Cable

Description: The backbone cabling used to connect all IDF's to the MDF, used for voice/data.

- Shall be Category 5e and installation must be in compliance with all EIA/TIA standards.
- The number of available wire pairs to each IDF must account for a minimum of 2 pairs per classroom. A minimum of 25 pairs of cable shall be used to any building encompassing an office. Each pathway, upon the population of cable, shall have enough wire pairs to accommodate all existing and future IDF's in that pathway's route.
- Cable must be rated for the environment that it will be installed in, such as plenum, riser or outdoor rated.
- Only Cat 5e 110 punch blocks will be allowed for terminations. Backbone pairs shall be terminated at the top left of the blocks installed in the IDF.
- Each copper backbone cable shall be machine labeled and printed EIA/TIA 606 Section 8 compliant at each end with its respective IDF number/letter. All binder groups shall be tied off with their respective identifying ribbon at every breakout point.

2.04 Wi-Fi Cable

Description: Cabling between Wi-Fi jacks and IDF/MDF's.

- Shall be blue Category 6A - 802.3bt Type 4 and installation must be in compliance with all EIA/TIA standards.
- Each blue cable shall be terminated at both ends with white Panduit Cat 6A RJ45 jacks.
- Panduit Executive style faceplate shall be used at access point location.
- Wireless access points shall be in every classroom, common areas, and exterior for full campus coverage.

2.05 Workstation Cable

Description: Cabling between workstations and IDF/MDF's.

- Installation must be in compliance with all EIA/TIA standards.
- Each standard classroom must have a minimum of two workstations:
    - One workstation (the teacher's) consists of 2 purple Cat 6A cables and 1 grey Cat 6A cable.
    - The second workstation (the student's) consists of 4 purple Cat 6A cables.
    - Each purple cable shall be terminated at both ends with a beige Panduit Cat 6A RJ45 jacks.
    - Each gray cable shall be terminated, with slack loop at IDF/MDF location with a Cat 6A black RJ45 for VOIP and 110 punch block for non-VOIP. District will identify where to use VOIP and where to non-VOIP. Workstation terminates with a black Panduit, Cat 6A RJ45 jack.
- Panduit LDP series or Panduit T-70 series (both Cat 6A compliant) raceway shall be used on interior walls where raceway is required for station drops. Panduit T -70 shall be used for computer labs and have access points every 5 feet (an access point shall consist of one duplex outlet 110 VAC receptacle and two beige Cat 6A data jacks).
- Copper station cabling may run outside of conduits and above T-Bar suspended ceilings when available. Cables installed in this fashion must follow these guidelines:
    - Run horizontally in bundles and tie down neatly without the use of zip-ties.
    - Be well clear of any light fixtures or other electrical appliances that may affect data transmissions.
    - Have their own support system, such as J-Hooks or a cable tray
    - Cable tray shall be a minimum of 12"x4" wire mesh and UL listed.
    - Cannot be supported by other items in the ceiling such as conduit, ducts and ceiling grids.

2.06 Fiber Inner Duct

Description: Ducting specifically manufactured to enclose and protect fiber optic cable.

- Must be used for all fiber installations, with exceptions where conduits are too small to run inner duct.
- LUSD will be notified, in writing, that conduits might be too small to run inner duct. LUSD must approve, in writing, any fiber run not in inner duct.

2.07 Fiber Distribution

Description: The backbone cabling used to connect all IDF's to the MDF.

- Only 50 um-multimode fiber (OM4) shall be used and installation must comply with all EIA/TIA standards.
- Singlmode fiber (OS2) shall be used as needed due to distances.
- Only 62.5/125 um-multimode fiber shall be used for fire alarm applications
- A minimum of 12-strand fiber shall be used from the IDF's to the MDF.
- Each fiber cable shall homerun from the IDF's to the MDF without the use of interconnects.
- Each pathway, upon the population of fiber, shall have enough fibers to accommodate all existing and future IDF's in that pathway route, and also be accompanied by a coax cable.
- SC style connectors shall be used for all fiber termination.
- All fiber strands shall be terminated and labeled at both ends with its respective IDF identifier.
- All fiber interconnect devices shall be labeled with their respective IDF identifier.
- At each location where the fiber cable is exposed to human intrusion, it shall be marked with warning tags. These tags shall be yellow or orange in color, and shall contain the warning: "CAUTION FIBER OPTIC CABLE." The text shall be black, block characters and at least 3/16" high. A warning tag shall be permanently affixed to each exposed cable or bundle of cables.

2.08 Main Distribution Facility (MDF)

Description: A location within a building or complex of buildings, where the entire telecommunications system originates. EIA/TIA-569 standards refer to the room housing the MDF as the "Equipment Room."

- Must be in compliance with all EIA/TIA standards.
- Must have fire treated ¾" plywood on all walls.
- Must have (1) 4-post rack and (2) 2-post racks in secured dedicated rooms
- Cabinets must have a dedicated power outlet mounted inside.

- Cabinet shall be load tested with no less than 200 pounds and up to rated shear strength.
- Ladder racking must be mounted on the perimeter of all walls and above cabinets.
- A Panduit wire manager must be mounted in-between every patch panel (must use one wire management panel for every patch panel).
- A 3-foot slack loop shall be required at MDF for all cables.
- MDF room sizing:
    - High School – 15'x10'
    - Middle School – 10'x8'
    - Elementary School – 9'x8'

2.09 Intermediate Distribution Facility (IDF)

Description: A location in a building that interconnects and manages the telecommunications wiring between the MDF and workstation devices.

- Must be in compliance with all EIA/TIA standards.
- Must have fire treated ¾" plywood on all walls.
- Cabinets must have a dedicated power outlet mounted inside.
- Must have (2) lockable 90" tall, 19-inch / 40 RU, front and rear swing cabinets in unsecured locations.
- Must have (2) 2-post racks in secured dedicated rooms.
- Cabinet shall be load tested with no less than 200 pounds and up to rated shear strength.
- Ladder racking must be mounted on the perimeter of all walls and above cabinets.
- Cabinets must adhere to ADA requirements. See Enclosure G
- A Panduit wire manager must be mounted in-between every patch panel (must use one wire management panel for every patch panel).
- A 3-foot slack loop shall be required at IDF for all cables.

2.10 Backboard

Description: Generally, refers to the plywood sheeting lining the walls of telecommunications facilities. Backboard may also refer to the entire wall-mounted assembly including wire management, wiring blocks, and equipment cabinets.

- Must have fire treated ¾" plywood on all walls.
- Dimensions shall be no larger than the cabinet/IDF when installed in a classroom.
- Shall be fastened to two separate wall studs with 4 lag bolts.
- Shall be no thinner than 5/8."

2.11 Grounding and Bonding

Description: Generally, refers to the grounding and bonding requirements for telecommunications rooms, including data cabinets, racks, and ladder racking systems. Strictly adhere to all Building Industry Consulting Service International (BICSI), Telecommunications Industry Association (TIA) recommended installation, best practices, codes, and standards when installing the grounding and telecommunications bonding infrastructure.

- Telecommunications Main Grounding Busbar (TMGB) shall be located in the MDF: busbar placed in convenient and accessible location and bonded by means of bonding conductor for telecommunications to building service equipment (power) ground.
    - Telecommunications Main Grounding Busbar (TMGB) shall be constructed of .25” (6.4 mm) thick solid copper bar. The busbar shall be 4” (100 mm) high and 20” (510 mm) long and shall have 30 attachment points (two rows of 15 each) for two-hole grounding lugs. The hole pattern for attaching grounding lugs shall meet the requirements of ANSI-J-STD – 607-A and shall accept 27 lugs with 5/8” (15.8 mm) hole centers and 3 lugs with 1” (25.4) mm) hole centers. The busbar shall include wall-mount stand-off brackets, assembly screws and insulators creating a 4” (100 mm) standoff from the wall. The busbar shall be UL Listed as grounding and bonding equipment.
- Telecommunications Grounding Busbar (TGB) shall be located in the IDF: interface to building telecommunications grounding system generally located in telecommunications room. Common point of connection for telecommunications system and equipment bonding to ground, and located in telecommunications room or equipment room.
    - Telecommunications Grounding Busbar (TGB) shall be constructed of .25” (6.4 mm) thick solid copper bar. The busbar shall be 2” (50 mm) high and 12” (300 mm) long and shall have 9 attachment points (one row) for two-hole grounding lugs. The hole pattern for attaching grounding lugs shall meet the requirements of ANSI-J-STD – 607-A and shall accept 6 lugs with 5/8” (15.8 mm) hole centers and 3 lugs with 1” (25.4 mm) hole centers. The busbar shall include wall-mount stand-off brackets, assembly screws and insulators creating a 4” (100 mm) standoff from the wall. The busbar shall be UL Listed as grounding and bonding equipment.

2.12 Testing and Documentation

Testing: Contractor shall test each fiber strand and each pair of twisted pair copper cable after labeling is 100% complete. LUSD reserves the right to have a representative present during testing.

- **Fiber Optics Cable**: Each strand shall undergo bi-directional testing for signal attenuation losses.
  - Test Equipment:
    - Multi-mode: Fluke DSP 4000 for equivalent.
    - Single-mode: Laser Precision TD2000 OTDR with appropriate modules, or equivalent.
  - Tests:
    - Multi-mode: Bi-directional signal attenuation at 850 and 1300 nm.
    - Single-mode: Bi-directional signal attenuation at 1310 and 1550 nm.
  - Test Criteria:
    - Signal loss less than the link loss budget as determined by the tables below.

SC Connector Pair	0.5dB
Multi-Mode Cable	
Wavelength (nm)	Maximum Attenuation (dB/km)
850	3.5
1300	1.5

Example: A link with 3 connectors and a total length of 500m should have a maximum attenuation of 3.25dB at 850nm and 2.25dB at 1300nm

SC Connector Pair	0.5dB
Single-Mode Cable	
Wavelength (nm)	Maximum Attenuation (dB/km)
850	1.0
1300	1.0

- **Workstation Cable:** Each workstation cable shall be tested from the Jack Panel to the data outlet after labeling is completed.
  - Test Equipment: Fluke DSP-4000 or equivalent.
  - Tests: Conform to EIA/TIA Standards for Category 6A.
  - Test Criteria: Tested to Category 6A for permanent link compliance.
- **Wi-Fi Cable:** Each Wi-Fi cable shall be tested from the Jack Panel to the data outlet after labeling is completed.
  - Test Equipment: Fluke DSP-4000 or equivalent.
  - Tests: Conform to EIA/TIA Standards for Category 6A and 802.3bt Type 4.
  - Test Criteria: Tested to Category 6A for permanent link compliance.

Documentation: Contractor shall provide documentation to include test results and Visio "As-Built" drawings in both soft and hard copy format.

- **Fiber Test Results**: Shall be entered onto the attached form "Fiber Test Results."
    - Only original signed copies will be acceptable.
    - Hand written results are not acceptable.
    - Copies of test results are not acceptable.
    - Test results shall be in PDF format.
- **Workstation/Wi-Fi Test Results**: Shall be provided in the form of printouts from the test equipment, as well as computer file copies on CD including the software needed to read the results.
    - Only original signed copies will be acceptable.
    - Hand written results are not acceptable.
    - Copies of test results are not acceptable.
    - Test results shall be in PDF format.
- **As-Built Drawings:** Contractor shall produce drawings while adhering to the following guidelines:
    - Always use icons from the Visio stencils provided by LUSD. Not all available icons are shown below.

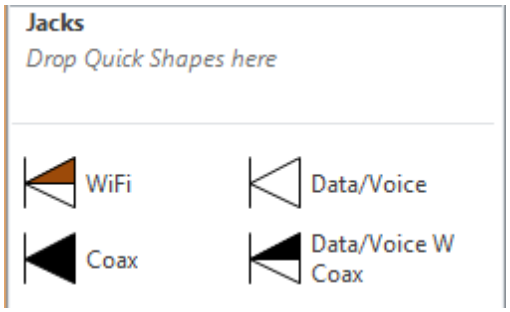

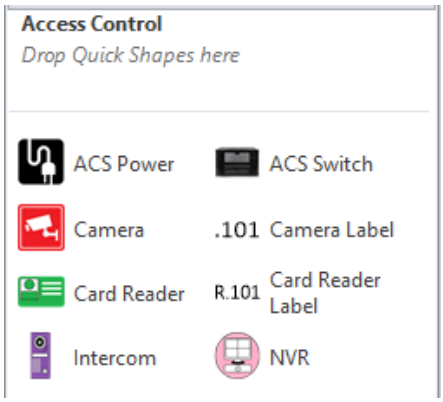

    - Depiction of backbone cable routing.
    - Locations of access points, card readers, distribution cabinets, intercoms, jacks, NVRs, security cameras and workstations.
        - Active components between an end point and NVR/switch, must be documented (power injectors, switches/repeaters, hubs, etc.).
        - Access Control components must have power sources identified.
        - Jacks must be accompanied by a jack label.
        - Nodes must be accompanied by an IP address.

- Submit before final inspection for punch list. Incorrect Visio drawings are punch list items and are to be corrected before re-inspection.
- Additional copies corresponding to the appropriate IDF/MDF, shall be posted in the MDF's and IDF's.

Sample of LUSD Visio drawing

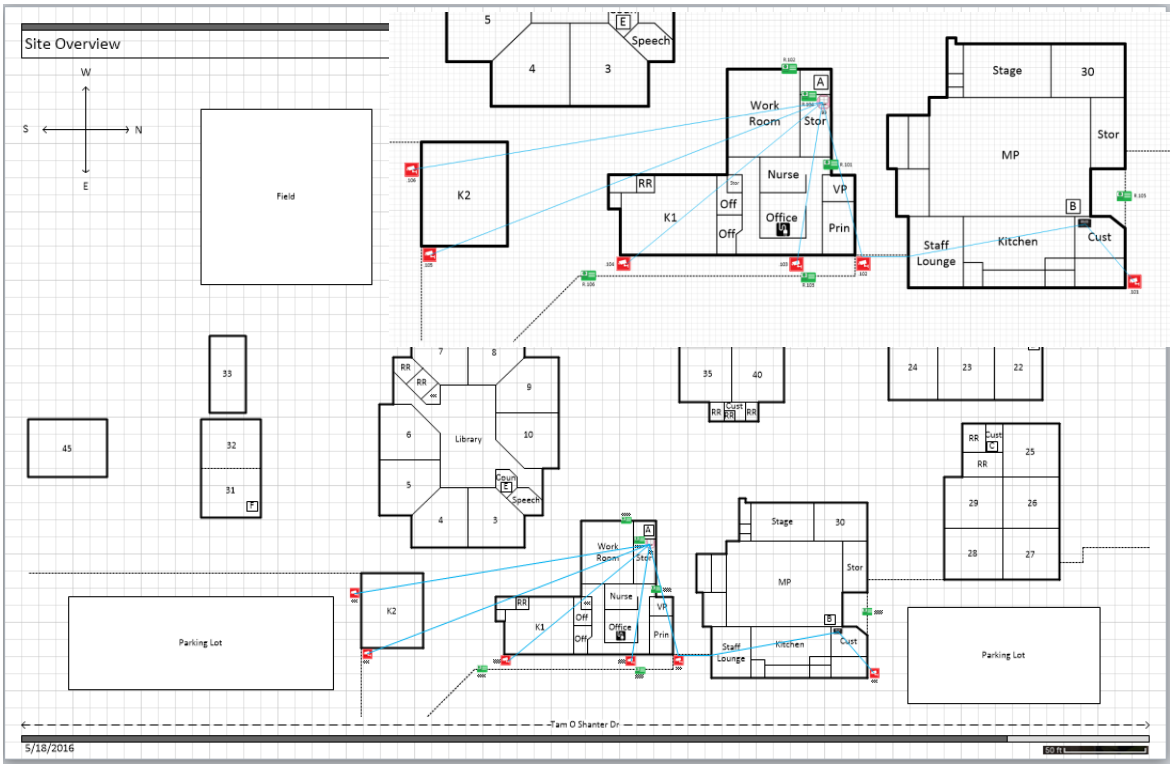

Sample of LUSD Visio Backbone

2.13 Acceptance

Acceptance of the Data Communications System, by LUSD, shall be based on the results of testing, functionality, and the receipt of documentation.

- With regard to testing, all fiber segments and workstation data cables must meet the testing criteria established in Section 2.12 above.
- With regard to functionality, contractor must demonstrate to LUSD that Gigabit Ethernet data signals can be successfully transmitted bi-directionally, from the MDF/IDF to and from a number of individual data outlets.
    - No more than 5% of the data jacks will be tested.
        - If any locations fail, an additional 5% will be tested until no more links fail.
- With regard to documentation, all required documentation shall be submitted to LUSD

PART 3 – Execution

3.01 Division of Work

Contractor shall design and install the data communications system as described in the preceding documentation. Installation shall result in a functional system. The scope of work shall include:

- All necessary conduit and raceway with a Visio drawing showing proposed cable routes, existing conduit to be used, new conduit being installed, equipment racks and approximate drop location. (Note: The EIA/TIA specifies at least 2 drops per workstation location, back to the IDF/MDF).
- Necessary trenching, backfill, replacement of landscape material, repair of damage to utilities or structures, replacement of asphalt and base, and replacement or repair to concrete work resulting from conduit or raceway installation.
- Provide and install all equipment.
- Test and document system upon completion. Copies of all other forms and enclosures shall be included.
- Supply and install all necessary materials resulting in a safe, complete and functional system. The scope of work shall be reviewed by no less than 1 person for completeness from the following departments: Facilities & Planning, Maintenance & Operations.

PART 4 – Conduit

4.01 Underground

- Contractor will use PVC schedule 40 underground, with rigid 90-degree elbows and tracer tape placed 6” to 12” over the top of the PVC portions. Elbows shall have a radius of at least 10 times the diameter of the conduit used.
- See NEC for appropriate depths and pull box sizes.
- Should be next to existing underground where possible.
- All new underground conduits shall be (2) 4” plus (1) 4” spare, PVC to support data/voice/intercom/PA. All new underground conduits shall be 2” PVC to support fire alarm.
- Areas near tree roots and other underground utilities will need to be hand dug. LUSD will identify those areas. Pull boxes are to have traffic lid covers (that say Data). The bottom will be grooved with drains installed. LUSD will provide diagrams upon request.

4.02 Aboveground

- All roof penetrations shall be approved by LUSD, before actual penetration is made.
- All exterior conduit that is accessible shall be in rigid conduit.
- A pull rope will be installed in all new and existing conduits used, including underground and interior conduit.

- Firewall penetrations will extend though the wall a minimum of 12 inches.
    - Shall be sealed around the outside with firecaulk.
    - Shall be sealed around the inside with firecaulk duct seal (the depth shall be 50% diameter of the conduit).
    - No innerduct shall be installed in a firewall penetration.
- Conduit size to be determined by EIA/TIA Standards leaving room for future expansion.
- EMT conduit shall be used in the following interior areas:
    - Gyms.
    - Multi-Purpose rooms.
    - Industrial Arts buildings.
- LB's shall not be used in new and existing conduit for data applications.
- Data/Voice conduits shall service LUSD's voice and managed IP network only.

4.03 Portable Classrooms

- All conduits to be installed on the exterior of a portable will be approved by LUSD personnel before installation.
- The center beam of a portable shall not be penetrated.

PART 5 – Concrete

- ALL concrete and asphalt repair shall be included in the scope of work and will be replaced from joint to joint (no patching, except when done temporarily for safety).
- Soft patch may not be used as a permanent patch for asphalt or concrete.

PART 6 – Change Orders

ALL change orders shall be routed to the department originating the project. Departments are typically Facilities & Planning and Technology Services and will be approved or disapproved on a case by case basis.

Approved change order form will be added to the scope of work and completed as a part of the contract.

PART 7 – Departure from Specifications

During unusual or unique situations, a departure from specifications (DFS) may be granted for specific locations and/or equipment. Approval is granted or denied in writing by Technology Services. See section 1.05 for materials substitutions.

The contractor will keep all forms on file until the warranty on the installation expires.

PART 8 – Asbestos and Lead Containing Paint Waiver

Asbestos work must be performed by M&O approved certified remediation company. Contractor must contact LUSD's Maintenance and Operations (M&O) department for a current list of Asbestos Hazard Emergency Response Act (AHERA) sites, requiring work to be performed by a remediation company.

All District sites will be considered to be a lead containing paint facility unless the area of work has been sampled and determined to be otherwise. All work including but not limited to cutting and/or hole drilling will be performed by a lead awareness trained individual that is also trained in HW collection and disposal activities. Otherwise the contractor must employee the services of an environmental company approved by M&O and certified to perform theses duties. All environmental activity will be reported to the Maintenance & Operation Structural Supervisor at (209) 331-7193 prior to the commencement of work.

PART 9 – Access Control & Video Safety

9.01 Introduction

In addition to LUSD Infrastructure Wiring Specifications, the following guidelines apply to access control card readers, security cameras, and other access devices installed within LUSD.

A site walk must also be performed with a Technology Services staff member before work begins.

9.02 JAESC/Transportation/Warehouse Specific Guidelines

- Access control devices and security cameras will be:
  - Connected directly on the LUSD network.
    - Operations, VLAN 99.
  - Powered by LUSD POE switches.
- All access control nodes should be fed from the MDF, when the run is within EIA/TIA specifications.
- NVR will be housed in the Data Center and rack mounted.

9.03 School Site Specific Guidelines

- Access control card readers and other access devices will be:
  - Connected directly on the LUSD network.
    - Operations, VLAN 99.
  - Powered by LUSD POE switches.
- Security cameras will be placed on their own private network.

- The installation location of the NVR is to be coordinated with Technology Services. Ideally, the NVR will be installed in the MDF where security and environmental conditions are monitored.
    - NVR's are to have two NICs
        - One placed on the private network
        - The other on LUSD's Operations network.
- A maximum of 1 external (public network) viewing license/user, will be allowed for each site.

9.04 District Wide Guidelines

- Network Video Recorder (NVR), GateKeeper, and other full OS devices (Windows/Mac), will have the LUSD's Anti-Virus and LanRev agents installed on the systems. In addition, the device name and description are setup according to LUSD specifications.
- All power supplies shall be housed in a cabinet or communications closet.
- All cable runs shall be terminated at a jack, not a modular plug.
- No faceplate needed in ceiling jacks and utilize yellow patch cables.
- Contractor shall receive approval from LUSD before sharing any cabling pathways with existing LUSD infrastructure.
- Yellow Cat 6A cable shall be used for infrastructure cabling runs, terminated into yellow Panduit jacks.
- 19" Patch Panel required for all cabinets (both existing or new cabinets).
- Repeaters/switches used where a 90 meter run is exceeded, are to be located 5 feet from an existing MDF/IDF.
- All jacks shall be labeled in accordance with LUSD specifications.
- Technology Services Network Operations Center (NOC) shall be contacted before anything is patched into LUSD's network. The NOC will be able to verify connectivity and ensure there are no other issues.
    - NOC can be reached at: (209)331-8911.

9.05 Documentation Guidelines

- Please see section 2.12 for cable testing and Visio drawing guidelines

9.06 Power

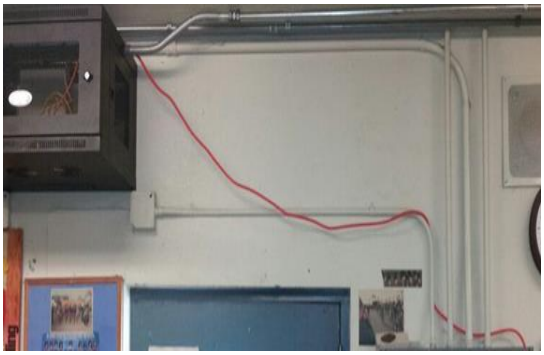

All cabinets will have a dedicated circuit/breaker and power sources must be mounted per NEC requirements.

During the initial walk with Technology Services, power sources will be identified. If power source is not available, Technology Services will work with M&O to coordinate the installation of power source. ***Powering cabinets with extension cords is not permissible.***

Temporary Power

If active components are not operating off a dedicated power outlet/source, then it needs to be noted on the drawing with building/location. All active components mounted in a cabinet must have a dedicated power outlet within the cabinet. Do not affix raceway to walls for temporary power/extension cords.

9.07 Miscellaneous

- All wires must be labeled w/ wire-wrap style labels within 3 inches of the jacks.

- Jacks should be labeled and tested at both ends of each smallest segment according to Specifications. This type of passive cross connect is no longer allowed.

- As of July 1st, 2016, single gang boxes are not permitted in IDFs.
- This photo depicts what **not** to use anymore.
    - Jacks are now placed in a 24 port patch panel
        - Panduit part #CP24BLY

PART 10 – A/V Projectors

10.01 Mounting Guidelines

- For new construction, DSA approved drawings on following pages must be observed by both architect and installer.
- DSA standards must be followed
- Any non-standard mounts must be approved by F&P.
- All mounts must be tagged with contractor's name and date of installation. See DSA approved mounting documentation.
- HDMI cables mounted in raceway must be able to pass a clean digital signal, with an allowance for a standard quality user patch cable to span 35 feet.
    - For example: If the user connects a 35-foot cable to the user interface/wall plate and the length of the infrastructure cable between the wall plate and the projector is 10 feet, then the total length of digital transmission is 45 feet; therefore, the installer must demonstrate that the infrastructure cable can deliver a clear picture while being extended with a 35-foot HDMI male-to-male patch cable. Sound must also be demonstrated through jacks in faceplates.
- User connection interface/wall plate will contain, one VGA, one HDMI, and one 1/8 stereo audio jack. Active faceplates will be used for VGA/HDMI connection.
- User connection interface/wall plate will contain one VGA, one HDMI, and one 1/8 stereo audio jack. Active faceplates will be used for VGA connection.
- Power will be installed high on the wall within two feet of the projector.

10.02 Short Throw Projectors

- Mounted to a plate/backboard that spans two studs.
- Secured to wall studs with 4 lag bolts.
- Head clearance from bottom of projector must be a minimum of 78 inches from floor.
- All CAT6A network connections, AV connections, and power shall be installed behind the short throw wall mount bracket.
- The use of short throw projectors shall be determined per project, and with District approval.

10.03 Ceiling Mount Projectors

- For T-Bar Ceiling: Two drop ceiling T-bar rods must be attached to opposite corners of the T-bar projector mount panels.
- For Hard Lid Ceiling: Mount must be bolted to cross-members(or ceiling joist) with no less than two bolts and some additional mounting brackets.
- All CAT6A network connections, AV connections, and power shall be installed above the ceiling mount bracket.
- The use of ceiling mount projectors shall be determined per project, and with District approval.

10.04 Promethean Boards

- 75” wall mounted Promethean Boards shall be installed in all classrooms
- Promethean Boards shall have adjustable mounts when used in Kindergarten through 6th grade classrooms.
- HMDI cabling shall be from Promethean Board to the teaching station with a CAT6A connection. An additional HMDI connections shall be installed directly below the board with a CAT6A connection.

10.05 Multipurpose Rooms/Gyms

- Large assembly areas shall receive electric large format projection screens and lamp less ceiling mounted projectors. Refer to current District standards for current manufacture and model number.
- Large assembly areas shall have a dedicated AV cabinet to facilitate local presentations and house wireless microphones and AV amplifiers.
- Large assembly areas shall have separate sound systems.
- AV wall controls shall be based on Extron Electronics and control all AV in the space, with the capability to integrate lighting and shades.
- Sizing of screens, throw distance of projector, and locations shall be engineered by AV Contractor and approved by the District.

10.06 DSA Mounting Documentation

Projector Anchor – Wood/Metal Studs (Sample)

- Electric screens shall be used, where applicable.

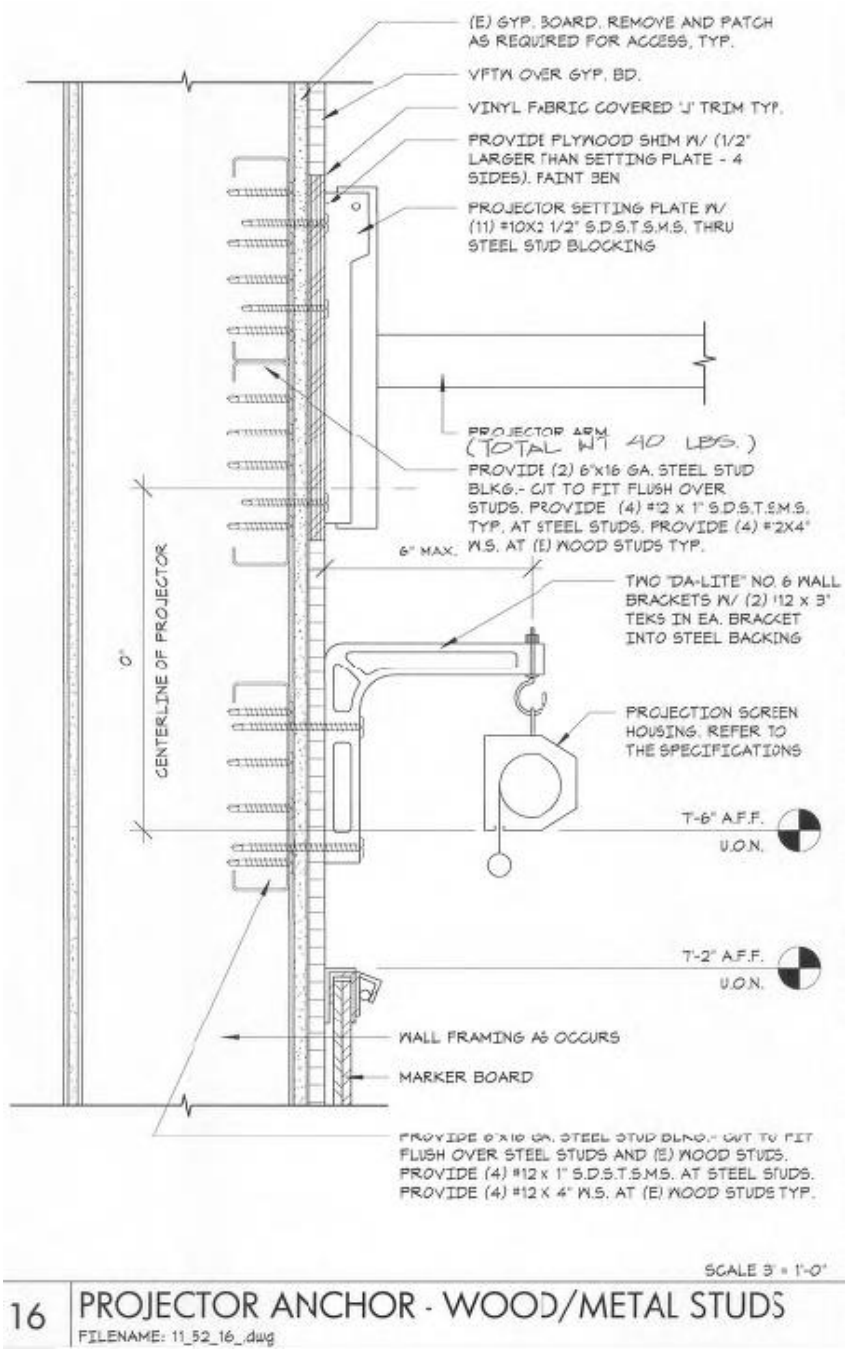

Projector Anchor – CMU (Sample)

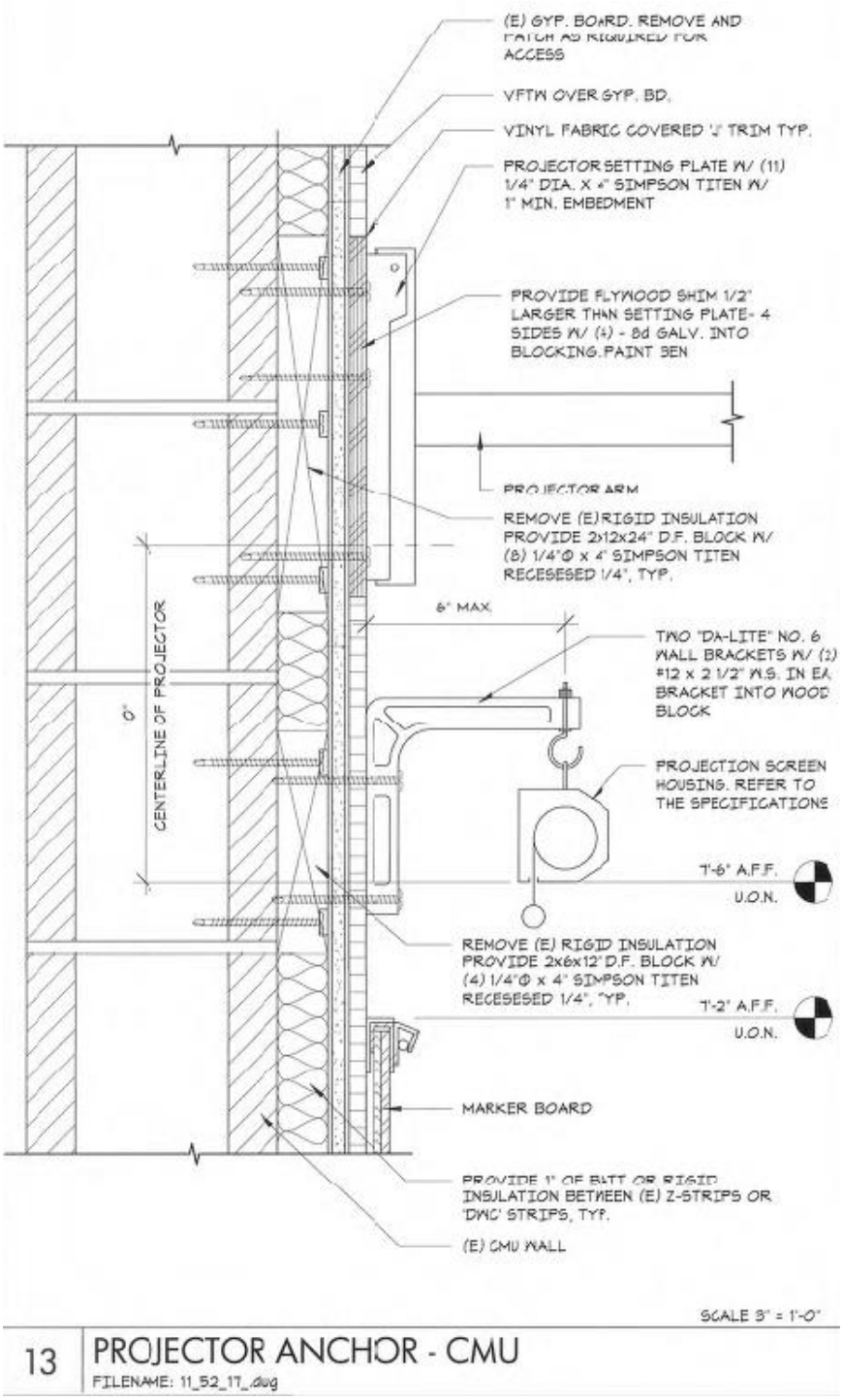

Projector Mount (Sample)

Panel must have two drop ceiling suspension wires.

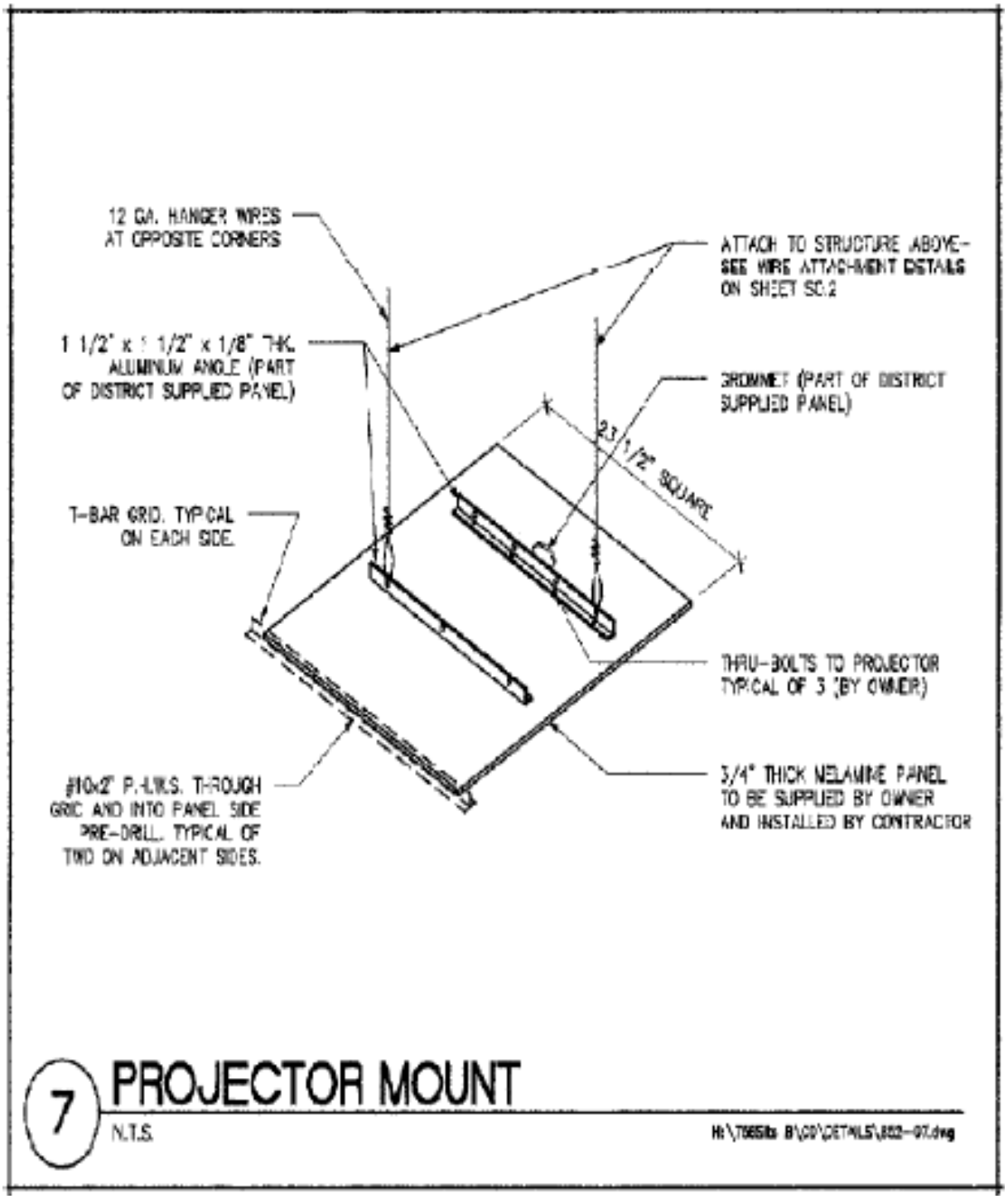

PART 11 – Intrusion Alarm

11.01 System

- The system is based on Ademco panels, keypads, and devices
- No door contacts

11.02 Telco Interconnect

- Shall be clearly identified by the CSID noted on the keypad for each COM panel.
- Each new COM panel shall have a dedicated Measured Business Line.
- 3-pair 66 block style biscuit-blocks are preferred at point of termination for COM panel phone lines (No RJ31X's).
- LUSD will only test Measured Business Line to 66 block style biscuit-block.

11.03 Wiring

- Shall be supported by D rings, Velcro, or J hooks.
- Pathways should not be shared with data cabling.
- When overriding existing voice or data cables in a box or conduit, Technology Services must be contacted and give approval to do so.

PART 12 – Enclosures

A. LUSD IDF Layout
B. LUSD Labeling Format
C. LUSD Parts List
D. LUSD Telecommunications Jack Legend

Enclosure A - LUSD IDF Layout

The Intended layout of ALL 19-inch racks and/or patch panels need to be verified and approved by the LUSD wiring inspector of the I.S. Department before any racks, jacks, or patch panels are mounted.

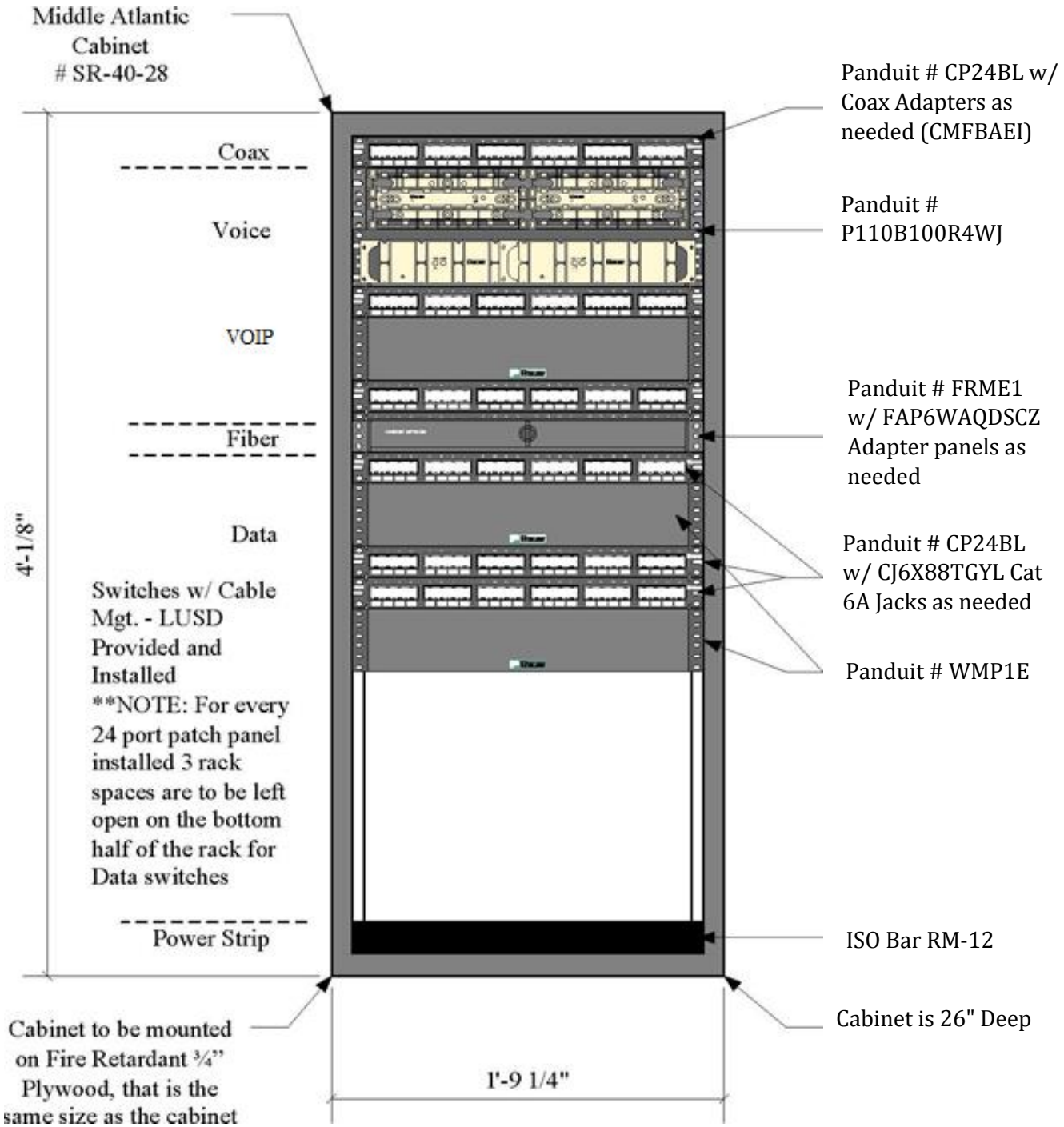

Enclosure B – LUSD Labeling Format

The LUSD labeling format is a 4-part identifier that indicates the campus, type of jack, IDF location, room, and jack. Below is a key to determine the jack information and name new locations.

WW-XX-YY-ZZ

CAMPUS AND VOICE OR DATA	MDF OR IDF DESIGNATION	ROOM # OR ABBREVIATION	JACK # (TWO DIGITS)
Data = Even # (Purple) Voice = Odd # (Grey) Video = C (Coax) Card Readers = CR Camera = VS NVR = NVR See Next Page for Voice and Data numbers for each campus.	MDF = A IDF-B = B IDF-C = C etc.	West Admin Office = WA East Admin Office = EA Library = Lib 15 = 15 M2 = M2 etc. Determined by Campus Architect or IT Staff.	01 (1st Jack in Room) 02 (2nd Jack in Room) 03 (3rd Jack in Room) etc. Starts in corner of room and counts clockwise. New jacks increase from last jack.

VOICE EXAMPLE: The first voice jack in room M1 = "09-G-M1-01"

DATA EXAMPLE: The first data jack in room M2 = “10-G-M2-01"

DATA EXAMPLE: The first data jack in room E1 = "10-F-E1-01"

VOICE EXAMPLE: The first voice jack in room E1 = "09-F-E1-01"

DATA EXAMPLE: The first data jack in the West Admin Office = "10-A-WA-01"

CARD READER EXAMPLE: IDF Alpha ID + "CR" + IP address node # = DCR101

VIDEO SURVEILLANCE CAMERA EXAMPLE: IDF Alpha ID + "VS" + IP address node # = BVS101

NVR SECURITY EXAMPLE: IDF Alpha ID + "NVR" + IP address node # = ANVR101

*Dashes do not need to be included. However, the jack number must be two numeric characters Example: “10GM201” instead of “10GM21”

MDF/IDF'S & WORKSTATIONS ALL JACKS ARE TO BE IDENTIFIED WITH THE APPROPRIATE NUMBERING SCHEME.

All numbers must be legibly written on the jacks (or 110 punch panels, etc.) with a black permanent marker and then labeled.

Enclosure B Continued – LUSD Labeling Format

Site Location	Site Numbers	
	Data	Voice
Nutrition Services Operations Center	3	4
Bear Creek High	6	5
Lodi High	8	7
Tokay High	10	9
M&O	12	11
Julia Morgan	14	13
Liberty High	16	15
Plaza Robles High	18	17
Delta Sierra	20	19
Lodi Middle	22	21
Millswood	24	23
Woodbridge	26	25
Morada	28	27
Beckman	30	29
Clairmont	32	31
Creekside	36	35
Davis	38	37
Henderson	40	39
Heritage	42	41
Houston	44	43
John Muir	46	45
Lakewood	48	47
Larson	86	85
Lawrence	50	49
Live Oak	52	51
Lockeford	54	53
Lois Borchardt	56	55
Nichols	58	57
Oakwood	60	59
Parklane	62	61
Reese	64	63
Sutherland	66	65
Tokay Colony (Turner Academy)	68	67
Turner School	70	69
Victor	72	71
Vinewood	74	73
Wagner Holt	76	75
Washington	78	77
Christa McAuliffe	80	79
Westwood	82	81
Heritage Int.	84	83
Children's Center	86	85
Transportation	88	87
Warehouse	90	89
Lincoln Tech	92	91
Mosher	94	93
Elkhorn	96	95
Serna	98	97
Silva	100	99
Podesta	134	133

Enclosure C – Approved LUSD Parts List

CABINET and GROUNDING			
Manufacturer	**Part Number**	**Description**	**Location**
Middle Atlantic	SR-40-28	40 space, black, 90" tall swinging cabinet	MDF/IDF
Middle Atlantic	Lace-44LP	Vertical Lacing Bar	MDF/IDF
Middle Atlantic	QFAN	Accessory Quiet fan for cabinet	MDF/IDF
Panduit	RGW-100-1Y	Paint piercing grounding washer kit	MDF/IDF
Panduit	RGS134-1Y	Rack Grounding Strip Kit	MDF/IDF
Panduit	RGEJ624PHY	Equipment Jumper Grounding Kit, 24" jumpers	MDF/IDF

FIBER PRODUCTS			
Manufacturer	**Part Number**	**Description**	**Location**
Panduit	FRME4	Holds up to 12 FAP or FMP adapter panels	MDF
Panduit	FREM3	Holds up to 9 FAP or FMP adapter panels	MDF
Panduit	FREM2U	Holds up to 6 FAP or FMP adapter panels	MDF
Panduit	FRME1U	Holds up to 3 FAP or FMP adapter panels	IDF
Panduit	FAP3WAQDSC	OM4 SC FAP loaded with 3 SC duplex coupler	MDF/IDF
General Cable	BL0061PNU	OM4 6F 50um MM TB OFNP	Backbone
General Cable	AP0061PNU	OS2 6F SM TB OFNP	Backbone
General Cable	BL0061PNU	OM4 6F 50um MM TB OFNP	Backbone
General Cable	BL0061ANU.BK	OM4 6F 50um MM TB OFNP I/O	Backbone
General Cable	AP0061ANU.BK	OS2 6F SM TB OFNP I/O	Backbone
General Cable	BL0064M1A-DWB	OM4 6F 50um MM LT SINGLE JKT	Backbone
General Cagle	AQ0064M1A-DWB	OS2 6F SM LT SINGLE JKT	Backbone

WIRE MANAGMENT			
Manufacturer	**Part Number**	**Description**	**Location**
Panduit	WMP1E (NM2)	Wire Management to be mounted between every 24-port patch panel	MDF/IDF
Panduit	WMPSE (NM1)	Wire Management to be mounted between every switch like component	MDF/IDF

Enclosure C Continued – Approved LUSD Parts List

TWISTED PAIR PRODUCTS			
Manufacturer	**Part Number**	**Description**	**Location**
Panduit	CP24BL	24 Port Mini-Com patch panel	MDF/IDF
Panduit	CP48BLY	48 Port Mini-Com patch panel (Metal panel)	MDF/IDF/WS
Panduit	CPPL24WBLY	24 Port Mini-Com modular patch panel (Plastic)	MDF/IDF/WS
Panduit	FP6X88MTG	TX6A™ Category 6A UTP Field-Term RJ45 Plug	MDF/IDF/WS
Panduit	CJ6X88TGIG	GRAY CAT6A MOD JACK (for Server Locations)	MDF/IDF
Panduit	CJ6X88TGYL	Yellow 6A Mini-Com Jack (Access Control)	Access Control System
Panduit	CJ6X88TGWH	White 6A Min-com Jack (user Station)	WS
Panduit	CJ6X88TGBU	Blue Cat 6A Mini Com Jack (for VoIP)	MDF/IDF/WS
Panduit	CJ6X88TGGR	Green Cat 6A Mini Com Jack (for Intercom)	MDF/IDF/WS
Panduit	CJ6X88TGEI	Electric Ivory Cat 6A Mini Com Jack	WS
Panduit	UTP6XXYL	Non- Shielded Yellow 6A Patch Cord, XX is length	MDF/IDF/WS
Panduit	UTP28X*YL	Cat.6A, 28AWG, Yellow, * = length: 1,3,5,7,19,14 feet	MDF/IDF/WS
Panduit	P110B100R4WJ	19" Rack Mount Panel w 2 100pr 110 punch-down blocks and jumper troughs	MDF/IDF
Panduit	P110CB4-X	4pr 110 Connecting Clips 10pk	MDF/IDF
Panduit	P110CB5-X	5pr 110 Connecting Clips 10pk	MDF/IDF
General Cable	7133825	Purple CAT 6A CMR (for Data at workstations)	Horizontal
General Cable	7133819	Blue CAT 6A CMR (for Server drops, closets) – Wi-Fi	Horizontal
General Cable	7131823	Green CAT 6A CMP (for Intercom drops, closets)	Horizontal
General Cable	7131823	Green CAT 6A CMP (for Server drops, closets)	Horizontal
General Cable	7133767 (7133803)	Gray CAT 6 CMR 4 Pair wire (for Voice)	Horizontal
Commscope	CM-00424SMX-CF6A-02	SystiMax, Black CAT 6A OSP (Voice and Data)	Horizontal
General Cable	2131550E	Cat.5e, 25 pair CMP, White	MDF/IDF
General Cable	2133269E	Cat.5e, 25 pair CMP, Gray	MDF/IDF
Superior Essex	04-097-31	CAT 5 25 Pair OSP	MDF/IDF

Enclosure C Continued – Approved LUSD Parts List

COAX PRODUCTS			
Manufacturer	**Part Number**	**Description**	**Location**
Belden	6139B8	RG-11 Coax Dou-foil w/100% Shielding Plenum	Backbone
Belden	1523A	RG-11 Coax Dou-foil w/100% Shielding Non-Plenum	Backbone
Belden	1525A	RG-11 Coax Dou-foil w/100% Shielding OSP	Backbone

RACEWAY PRODUCTS			
Manufacturer	**Part Number**	**Description**	**Location**
Panduit	LD-5	Raceway for Data/Wi-Fi/Access Control System	Wi-Fi/ACS
Panduit	LDP-10	Raceway for Data/Voice/Coax	WorkStation
Panduit	T-70	Raceway for Comp. Lab That will accept communications and power	WorkStation
Panduit	CMBEI-X	Mini-Com Blank Ivory	WorkStation
Panduit	CFPSE4EI	Executive Faceplate Sloped	WorkStation
Panduit	JBX3510EI-A	Single gang Junction box	WorkStation

Enclosure D - LUSD Telecommunications Jack Legend

Data/Voice

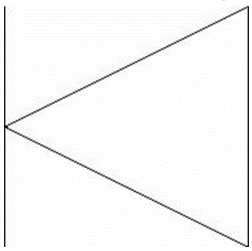

2/1

Wi-Fi

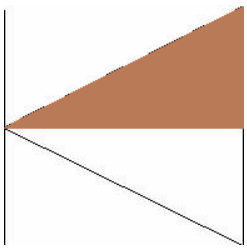

W1/0

This example has "2" for two data and "1" for one voice.

Data only *would be d/0 with "d" as the number of data jacks.*

Voice only *would be 0/v with "v" as the number of voice jacks.*

Category 6A cabling/jacks are indicated by a "W" preceding the number (or jack count)

Jack Color Code		
White - Wi-Fi		Electric Ivory - Data
Black - Voice		Yellow - Access Control
Blue - VOIP		Green - Intercom

Enclosure E – Data/Camera System Install Inspection Check List - Sample

Data/Camera System Install Inspection Check List

	Yes	No	N/A or Undetermined
1. Does the work done match the scope of work?	☐	☐	☐
Notes:			
2. Does the Visio match what was installed?	☐	☐	☐
Notes:			
3. Are all of the test results completed?	☐	☐	☐
Notes:			
4. Cabinet			
a. Is it mounted to the backboard and firmly affixed?	☐	☐	☐
b. Does the cabinet block anything and open?	☐	☐	☐
c. Is there dedicated 115 VAC?	☐	☐	☐
d. Are the cables bundled neatly and labeled in the back?	☐	☐	☐
e. Are all of the parts used in the Lodi USD specifications?	☐	☐	☐
f. Is everything labeled in front to Lodi USD specifications?	☐	☐	☐
Notes:			
5. Wiring			
a. Spot check the wire in the ceiling – is it supported every 4' to 8 ' per EIA/TIA?	☐	☐	☐
b. No black tape is to be used. Is there any black tape?	☐	☐	☐
c. No zip ties are to be used. Are there any zip ties?	☐	☐	☐
d. Is the pipe/raceway not overfilled per EIA/TIA?	☐	☐	☐
e. Was slack-loop provided?	☐	☐	☐
Notes:			
6. Stations			
a. Is each device labeled and have a wraparound label on the wire as per EIA/TIA?	☐	☐	☐
b. Is each device mounted with approved hardware?	☐	☐	☐
Notes:			

Enclosure E – Data/Camera System Install Inspection Check List – Sample Continued

	Yes	No	N/A or Undetermined
7. Pipe/Raceway			
a. Is all raceway Panduit?	☐	☐	☐
b. Are all pipe runs are rigid when below 8' or on the roof as per Lodi USD specifications?	☐	☐	☐
c. Does the firewall have 3' on each side of the wall as per building code?	☐	☐	☐
d. No set screw fitting shall be used. Is there any set screw fitting?	☐	☐	☐
e. Whenever pulling into a pipe/raceway, a pull string is required per Lodi USD specifications. Is there a string?	☐	☐	☐
Notes:			
8. Penetrations			
a. Do penetrations to an outside wall have a nipple and is it sealed with silicon on both the outside and inside?	☐	☐	☐
b. Were the penetrations approved by the Lead and Asbestos Manager?	☐	☐	☐
Notes:			
9. Does the Site Administrator approve and are they happy?	☐	☐	☐
Notes:			
Additional Notes:			

Enclosure F – Projector System Install Inspection Check List - Sample

Projector System Installation Inspection Check List

1. Does the work done match the scope of work?	☐ Yes	☐ No
Notes:		
2. Does the Visio match what was installed?	☐ Yes	☐ No
Notes:		
3. Are all of the test results completed?	☐ Yes	☐ No
Notes:		
4. SmartBoard		
a. Is existing whiteboard re-mounted correctly w/ white block style trim butted against end-cuts?	☐ Yes	☐ No
Notes:		
5. Projector		
a. Is it mounted to the backboard and firmly affixed (back-board reaches studs)?	☐ Yes	☐ No
b. Is it ceiling mounted in an approved manner (2 T-bar rods per mount)?	☐ Yes	☐ No
c. Is there dedicated 115 VAC?	☐ Yes	☐ No
d. Are the cables bundled neatly in the raceway?	☐ Yes	☐ No
e. Are all of the parts used in the Lodi USD specifications?	☐ Yes	☐ No
f. Is everything labeled in front to Lodi USD specifications?	☐ Yes	☐ No
Notes:		
6. Wiring (if it is run in the ceiling)		
a. Spot check the wire in the ceiling – is it supported every 4' to 8 ' per EIA/TIA?	☐ Yes	☐ No
b. No black tape is to be used. Is there any black tape?	☐ Yes	☐ No
c. No zip ties are to be used. Are there any zip ties?	☐ Yes	☐ No
d. Is the pipe/raceway not overfilled per EIA/TIA?	☐ Yes	☐ No
e. Was slack-loop provided?	☐ Yes	☐ No
Notes:		

Enclosure F – Projector System Install Inspection Check List – Sample Continued

7. Stations (if Cat5/6 wire and applicable)			
a. Is each device labeled and have a wraparound label on the wire as per EIA/TIA?	☐ Yes	☐ No	
b. Is each device mounted with approved hardware?	☐ Yes	☐ No	
Notes:			
8. Pipe/Raceway (if applicable)			
a. Is all raceway Panduit?	☐ Yes	☐ No	
b. Are all pipe runs rigid when below 8' or on the roof as per Lodi USD specifications?	☐ Yes	☐ No	
c. Does the firewall have 3' of pipe on each side of the wall as per building code?	☐ Yes	☐ No	
d. No set screw fitting shall be used. Is there any set screw fitting?	☐ Yes	☐ No	
e. Whenever pulling into a pipe/raceway, a pull string is required per Lodi USD specifications. Is there a string?	☐ Yes	☐ No	
Notes:			
9. Penetrations (if applicable)			
a. Do penetrations to an outside wall have a nipple and is it sealed with silicon on both the outside and inside?	☐ Yes	☐ No	
b. Were the penetrations approved by the Lead and Asbestos Manager?	☐ Yes	☐ No	
Notes:			
10. Does the Site Administrator approve and are they happy?	☐ Yes	☐ No	
Notes:			
Additional Notes:			

Inspected by: _____ Print Name: _____ Date: _____

Enclosure G – Accessible Requirements for Cabinet Mounting
(Images below for reference only)

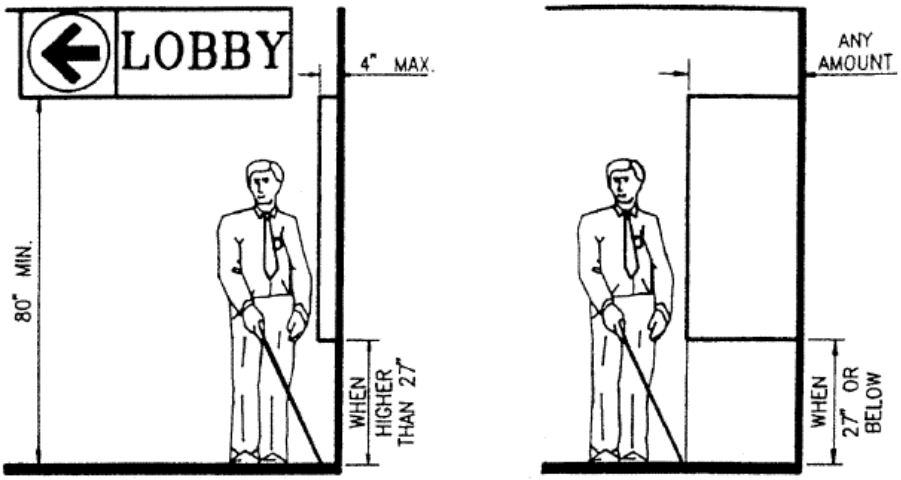

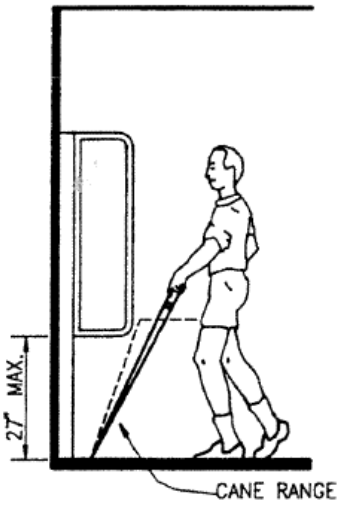

WALKING PERPENDICULAR TO WALL

THESE DIAGRAMS ILLUSTRATE THE SPECIFIC REQUIREMENTS OF THESE REGULATIONS AND ARE INTENDED ONLY AS AN AID FOR BUILDING DESIGN AND CONSTRUCTION.

FIGURE 11B-7A—PROTRUDING OBJECTS

1–134.61